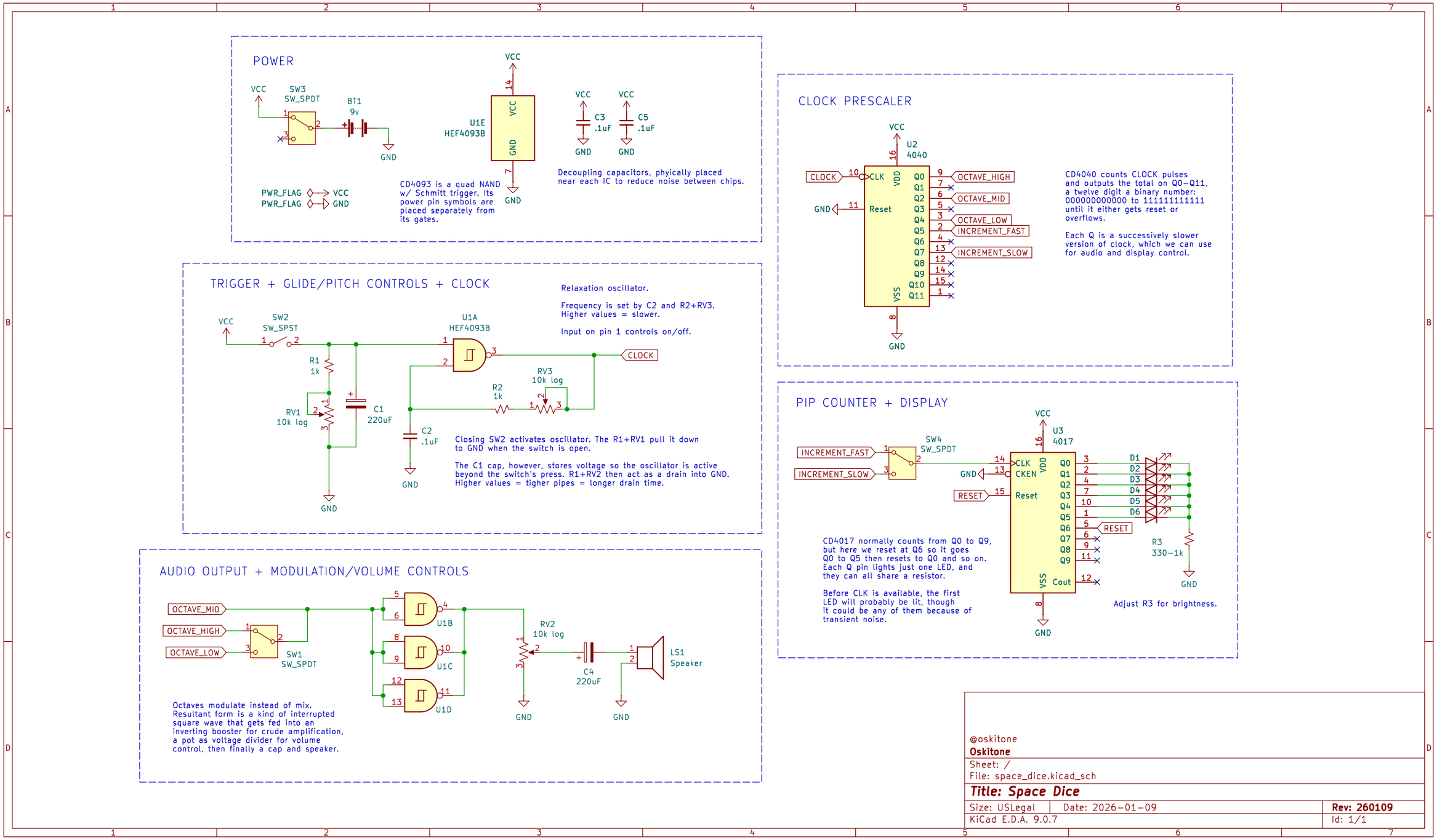
POWER
VCC
SW3
SW_SPDT
BT1
9v
GND
U1E
HEF4093B
VCC
GND
C3
.1uF
C5
.1uF
PWR_FLAG
PWR_FLAG
CD4093 is a quad NAND w/ Schmitt trigger. Its power pin symbols are placed separately from its gates.
Decoupling capacitors, phyically placed near each IC to reduce noise between chips.
TRIGGER + GLIDE/PITCH CONTROLS + CLOCK
SW2
SW_SPST
U1A
HEF4093B
R1
1k
RV1
10k log
C1
220uF
C2
.1uF
R2
1k
RV3
10k log
CLOCK
Relaxation oscillator.
Frequency is set by C2 and R2+RV3.
Higher values = slower.
Input on pin 1 controls on/off.
Closing SW2 activates oscillator. The R1+RV1 pull it down to GND when the switch is open.
The C1 cap, however, stores voltage so the oscillator is active beyond the switch's press. R1+RV2 then act as a drain into GND.
Higher values = tigher pipes = longer drain time.
AUDIO OUTPUT + MODULATION/VOLUME CONTROLS
OCTAVE_MID
OCTAVE_HIGH
OCTAVE_LOW
SW1
SW_SPDT
U1B
U1C
U1D
RV2
10k log
C4
220uF
LS1
Speaker
Octaves modulate instead of mix.
Resultant form is a kind of interrupted square wave that gets fed into an inverting booster for crude amplification, a pot as voltage divider for volume control, then finally a cap and speaker.
CLOCK PRESCALER
U2
4040
CLOCK
GND
CLK
Reset
VDD
VSS
Q0
Q1
Q2
Q3
Q4
Q5
Q6
Q7
Q8
Q9
Q10
Q11
OCTAVE_HIGH
OCTAVE_MID
OCTAVE_LOW
INCREMENT_FAST
INCREMENT_SLOW
CD4040 counts CLOCK pulses and outputs the total on Q0–Q11, a twelve digit a binary number: 000000000000 to 111111111111 until it either gets reset or overflows.
Each Q is a successively slower version of clock, which we can use for audio and display control.
PIP COUNTER + DISPLAY
U3
4017
SW4
SW_SPDT
INCREMENT_FAST
INCREMENT_SLOW
RESET
CLK
CKEN
Reset
VDD
VSS
Cout
D1
D2
D3
D4
D5
D6
R3
330–1k
CD4017 normally counts from Q0 to Q9, but here we reset at Q6 so it goes Q0 to Q5 then resets to Q0 and so on. Each Q pin lights just one LED, and they can all share a resistor.
Before CLK is available, the first LED will probably be lit, though it could be any of them because of transient noise.
Adjust R3 for brightness.
@oskitone
Oskitone
Sheet: /
File: space_dice.kicad_sch
Title: Space Dice
Size: USLegal
Date: 2026–01–09
Rev: 260109
KiCad E.D.A. 9.0.7
Id: 1/1