Physics 1100: MidTerm I

(Dated: February 3, 2005)

Do not forget: Draw the diagram/sketch for each of the problems. Magnitude of the gravitational acceleration $g = 9.80$ m/s^2.

1. In ancient mythology, King Theseus of Athens is trapped in the Labyrinth (a maze) and finds his way out by following a thread given to him by Ariadne. He starts out by walking 20.0 m due east, makes a 90.0° right turn, walks 15.0 m, makes another 90.0° right turn, and walks 8.00 m. (a) Draw the diagram of the problem. (b) What is Theseus's displacement from his initial position? (10 pts.)

2. The position versus time for a certain particle moving along x axis is shown in Fig. 1.
(Part I) Find the average velocity in the time intervals (a) 0 to 2.00 s, (b) 0 to 4.00 s, (c) 2.00 s to 4.00 s, (d) 4.00 s to 7.00 s, (e) 0 to 8.00 s. (Part II) Find the instantaneous velocity at the instants (a) $t = 1.00$ s, (b) $t = 3.00$ s, (c) $t = 4.50$ s, and (d) $t = 7.50$ s. (20 pts.)

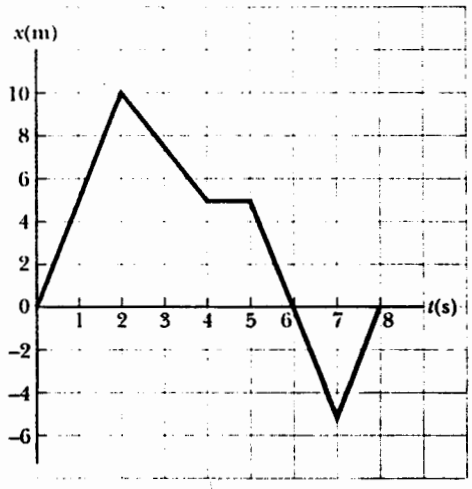

Fig.1

3. A truck on a straight road starts from rest and accelerates at $a_1 = 2.0$ m/s^2 until it reaches a speed $v_1 = 20$ m/s. Then the truck travels for $\Delta t_2 = 20$ s at a constant speed v_1 until the breaks are applied, stopping the truck in a uniform manner in an additional $\Delta t_3 = 5.0$ s. (a) How long is the truck in motion? (b) What is the truck's displacement? (c) What is the average velocity $\bar{v}$ of the truck for the motion described? (20 pts.)

4. A projectile is launched with an initial speed $v_0 = 60.0$ m/s at an angle $\theta = 35.0°$ above the horizontal. The projectile lands on a hillside $t_f = 3.00$ s later. (a) What is the velocity of the projectile (both magnitude and direction) $t_1 = 1.00$ s after the launch? (b) What are the coordinates (x_f, y_f) of the landing point? (c) Does the projectile approach the landing point while still rising or while falling? (20 pts.)

5. (Bonus problem: work on it if you have done all other problems.)
A 2.00-m-tall basketball player wants to make a basket from a distance of 10.0 m, as shown in Fig. 2. If he shoots the ball at a 45.0° angle, at what initial speed v_0 must he throw the basketball so that it goes through the hoop without striking the backboard? Note that the hoop is 3.05 m above the floor. (20 pts.)

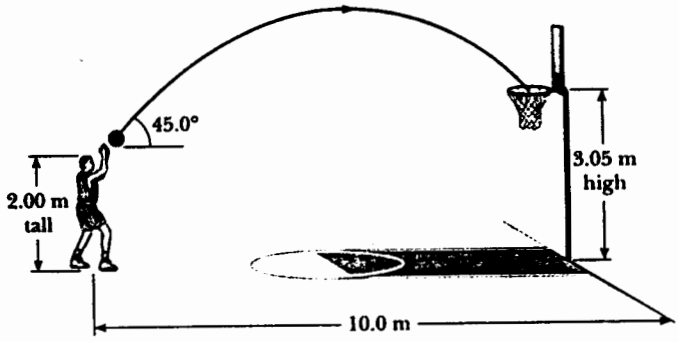

Fig.2

Solutions to Midterm I

Feb. 3, 2005

Staryuk

Phycs 1100

① (a)

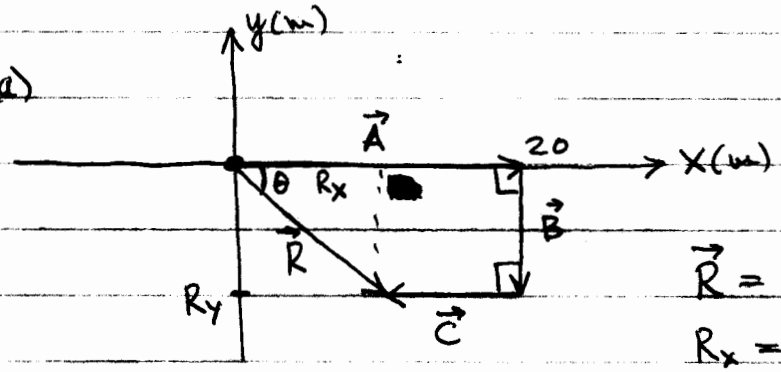

$\vec{A} = (20, 0)$

$\vec{B} = (0, -15)$

$\vec{C} = (-8, 0)$

$\vec{R} = \vec{A} + \vec{B} + \vec{C}$

$R_x = A_x + B_x + C_x = 20 + 0 - 8 = 12.0$

$R_y = A_y + B_y + C_y = 0 - 15 + 0 = -15.0$

(b) $\Rightarrow \vec{R} = (12, -15)$

magnitude $R = |\vec{R}| = \sqrt{12^2 + 15^2} = \boxed{19.2\ \text{m}}$

direction $\tan\theta = \dfrac{R_y}{R_x} \Rightarrow \theta = \tan^{-1}\left(\dfrac{-15.0}{12.0}\right) = -51.3^\circ$

$\theta = \boxed{-51.3^\circ}$ clockwise from $x > 0$

or $\theta = 128.7$ counterclockwise from $x > 0$.

② <u>Part I</u> Average velocity in time interval Δt

$$\bar{v} = \frac{\Delta x}{\Delta t}$$

From Fig. 1 find (a) $\bar{v} = \dfrac{10\ \text{m}}{2\ \text{s}} = 5.00\ \text{m/s}$

(b) $\bar{v} = \dfrac{5}{4}\ \dfrac{\text{m}}{\text{s}} = 1.25\ \text{m/s}$ (c) $\bar{v} = \dfrac{5-10}{4-2} = -2.50\ \text{m/s}$

(d) $\bar{v} = \dfrac{-5-5}{7-4}\ \dfrac{\text{m}}{\text{s}} = -\dfrac{10}{3}\ \text{m/s} = -3.33\ \text{m/s}$

(e) $\bar{v} = \dfrac{0-0}{8}\ \dfrac{\text{m}}{\text{s}} = 0\ \text{m/s}$

<u>Part 2</u> Instantaneous velocity $v(t)$ at moment t = slope of the tangent line to the trajectory $x(t)$ at time t.

From Fig. 1 find

(a) $V(t=1.00s) = \frac{10}{2} = 5.00$ m/s (b) $V(t=3.00) = \frac{-5}{4-2} = -2.50$ m/s

(c) $V(t=4.50) = \frac{0}{1} = 0$ m/s (d) $V(t=7.50) = \frac{0-(-5)}{8-7} = 5.00$ m/s

(3)

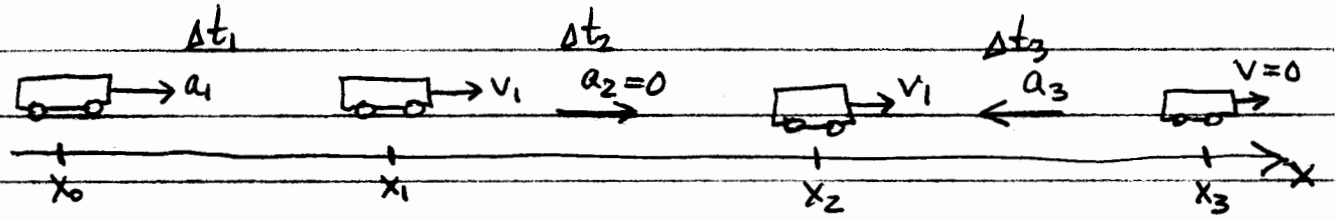

From x_0 to x_1 : motion with acceleration $a_1 = 2.0$ m/s^2

From x_1 to x_2 : motion with constant velocity $V_1 = 20$ m/s

$\Delta t_2 = 20$ s

From x_2 to x_3 : motion with acceleration $a_3 < 0$

(truck is stopping), $\Delta t_3 = 5.0$ s

(a) Total time in motion $t = \Delta t_1 + \Delta t_2 + \Delta t_3$

Find Δt_1 from $V_1 = \underset{\overset{\shortparallel}{0}}{V_{initial}} + a_1 \Delta t_1$

$$\Rightarrow \Delta t_1 = \frac{V_1}{a_1} = \frac{20 \text{ m/s}}{2.0 \text{ m/s}^2} = 10 \text{ s}$$

$$\Rightarrow t = 10 + 20 + 5 = \boxed{35 \text{ s}}$$

(b) Truck's displacement $\Delta x = x_3 - x_0$

Find it by adding displacements $\Delta x_1 = x_1 - x_0$,

$\Delta x_2 = x_2 - x_1$, and $\Delta x_3 = x_3 - x_2$

$$\Delta x = x_3 - x_0 = x_3 - x_2 + (x_2 - x_1) + (x_1 - x_0) = \Delta x_3 + \Delta x_2 + \Delta x_1$$

$$x_1 - x_0 = \overset{=0}{v_{initial}} \cdot \Delta t_1 + \frac{1}{2} a_1 \Delta t_1^2 = \frac{1}{2} \cdot 2 \cdot (10)^2 = 100 \text{ m}$$

$$x_2 - x_1 = v_1 \cdot \Delta t_2 = 20 \text{ m/s} \cdot 20 \text{ s} = 400 \text{ m}$$

$$x_3 - x_2 = v_1 \cdot \Delta t_3 + \frac{1}{2} a_3 \Delta t_3^2,$$

find a_3 from the condition that $v_{final} = 0$ m/s

$$\Rightarrow 0 = v_{final} = v_1 + a_3 \Delta t_3 \Rightarrow a_3 = -\frac{v_1}{\Delta t_3} = -\frac{20 \text{ m/s}}{5 \text{ s}} =$$

$$= -4.0 \text{ m/s}^2$$

$$\Rightarrow x_3 - x_2 = 20 \text{ m/s} \cdot 5 \text{ s} + \frac{1}{2}(-4.0 \text{ m/s}^2) \cdot (5 \text{ s})^2 =$$

$$= 100 - 50 = 50 \text{ m}$$

$$\Rightarrow \Delta x = 100 + 400 + 50 = \boxed{550 \text{ m}}$$

(c) Average velocity $\bar{v} = \frac{\Delta x}{\Delta t} = \frac{550 \text{ m}}{35 \text{ s}} = 15.7 = \boxed{16 \text{ m/s}}$

(4)

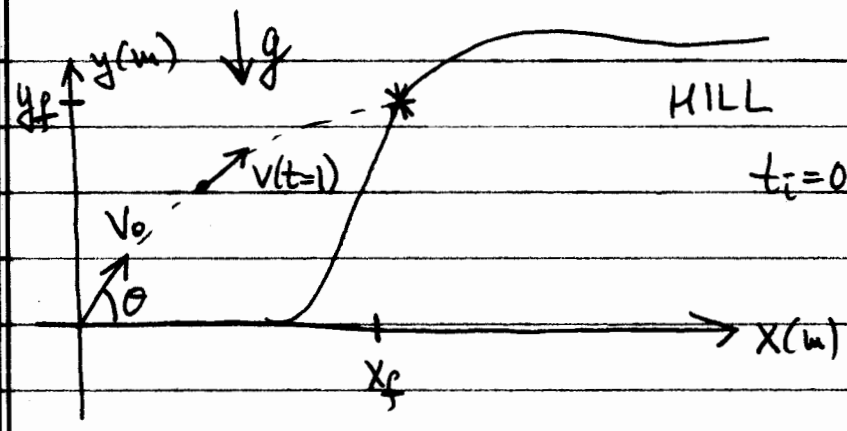

$t_i = 0$ $\begin{cases} V_0 = 60.0 \text{ m/s} \\ \theta = 35.0° \end{cases}$

$t_f = 3.00$ s

(a) At $t_1 = 1.00$ s $\quad V_x = V_{0x} = V_0 \cos\theta = 49.1$ m/s

speed $v(t=1) = \sqrt{(49.1)^2 + (24.6)^2} = 54.9$ m/s

$\theta = \tan^{-1}\left(\frac{24.6}{49.1}\right) = 26.6°$

$V_y = V_{0y} - gt = 60 \sin(35°) - 9.8(1) =$

$= 24.6$ m/s

(b) $x_f = V_{xo} \cdot t_f = 49.1\ m/s \cdot 3.00\ s = \boxed{147\ m}$

$$y_f = \underset{\substack{\parallel \\ 0}}{y_i} + V_{yo} t_f - \frac{1}{2} g t_f^2 =$$

$$= 60 \sin(35°)(3) - \frac{1}{2}(9.8)(3)^2 = \boxed{59.1\ m}$$

(c) Find components of velocity at $t = t_f$
(just before the projectile lands)

$V_x = V_{xo} = 49.1\ m/s$ (does not change with time)

$V_y = V_{yo} - g t_f = 60 \sin(35°) - 9.8 \cdot 3 = 5.01\ m/s$

Since $V_y > 0$, the projectile is still rising at that moment.

(5) Bonus problem

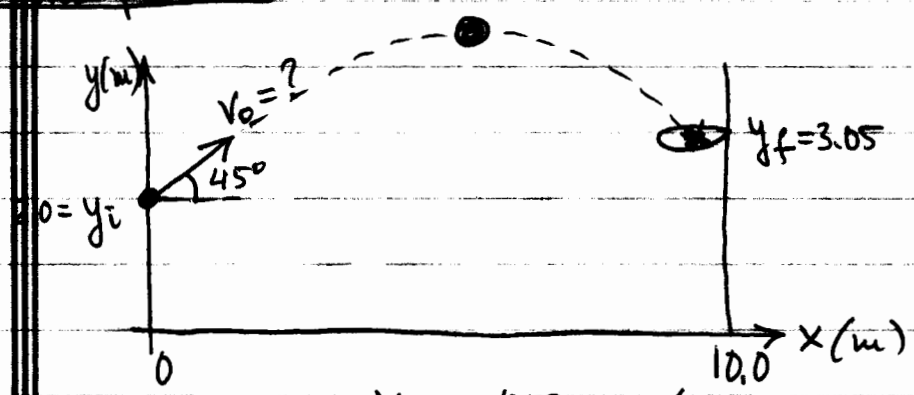

$\theta = 45.0°$

$\Delta x = 10.0\ m$

$\Delta y = y_f - y_i = 3.05 - 2.00$
$= 1.05\ m$

$V_{xo} = V_0 \cos 45° = V_0/\sqrt{2}$; $V_{yo} = V_0 \sin 45° = V_0/\sqrt{2}$

Motion along x: $\Delta x = V_{xo} t = V_0 \cos(45°) t$ (1)

along y: $\Delta y = y_f - y_i = V_{yo} t - \frac{1}{2} g t^2 =$

$= V_0 \sin(45°) t - \frac{1}{2} g t^2$ (2)

Express t from (1)

$$t = \frac{\Delta x}{V_0 \cos(45^\circ)}$$ and plug it in (2)

$$\Rightarrow \Delta y = V_0 \sin(45^\circ) \frac{\Delta x}{V_0 \cos(45^\circ)} - \frac{1}{2} g \left(\frac{\Delta x}{V_0 \cos(45^\circ)}\right)^2 =$$

$$= \Delta x - \frac{1}{2} g \left(\frac{\Delta x}{V_0/\sqrt{2}}\right)^2 = \Delta x - g\left(\frac{\Delta x}{V_0}\right)^2$$

because $\sin(45^\circ) = \cos(45^\circ) = \frac{1}{\sqrt{2}}$

$$\Rightarrow \quad g \frac{(\Delta x)^2}{V_0^2} = \Delta x - \Delta y$$

$$\Rightarrow \quad V_0^2 = \frac{g(\Delta x)^2}{\Delta x - \Delta y}$$

$$\Rightarrow \quad V_0 = \sqrt{\frac{g(\Delta x)^2}{\Delta x - \Delta y}} = \Delta x \sqrt{\frac{g}{\Delta x - \Delta y}} =$$

$$= 10.0\,m \sqrt{\frac{9.80\,m/s^2}{(10.0 - 1.05)\,m}} = 10.46 = \boxed{10.5\,m/s}$$