BREAK ALL SHARP EDGES - EXCEPT O-RING GROOVES
ASSUME RADIAL SYMETRY
TOLERANCE +/- .002 FOR 4 DECIMAL PLACE DIMENSIONS
TOLERANCE +/- .01 FOR 3 DECIMAL PLACE DEMENSIONS

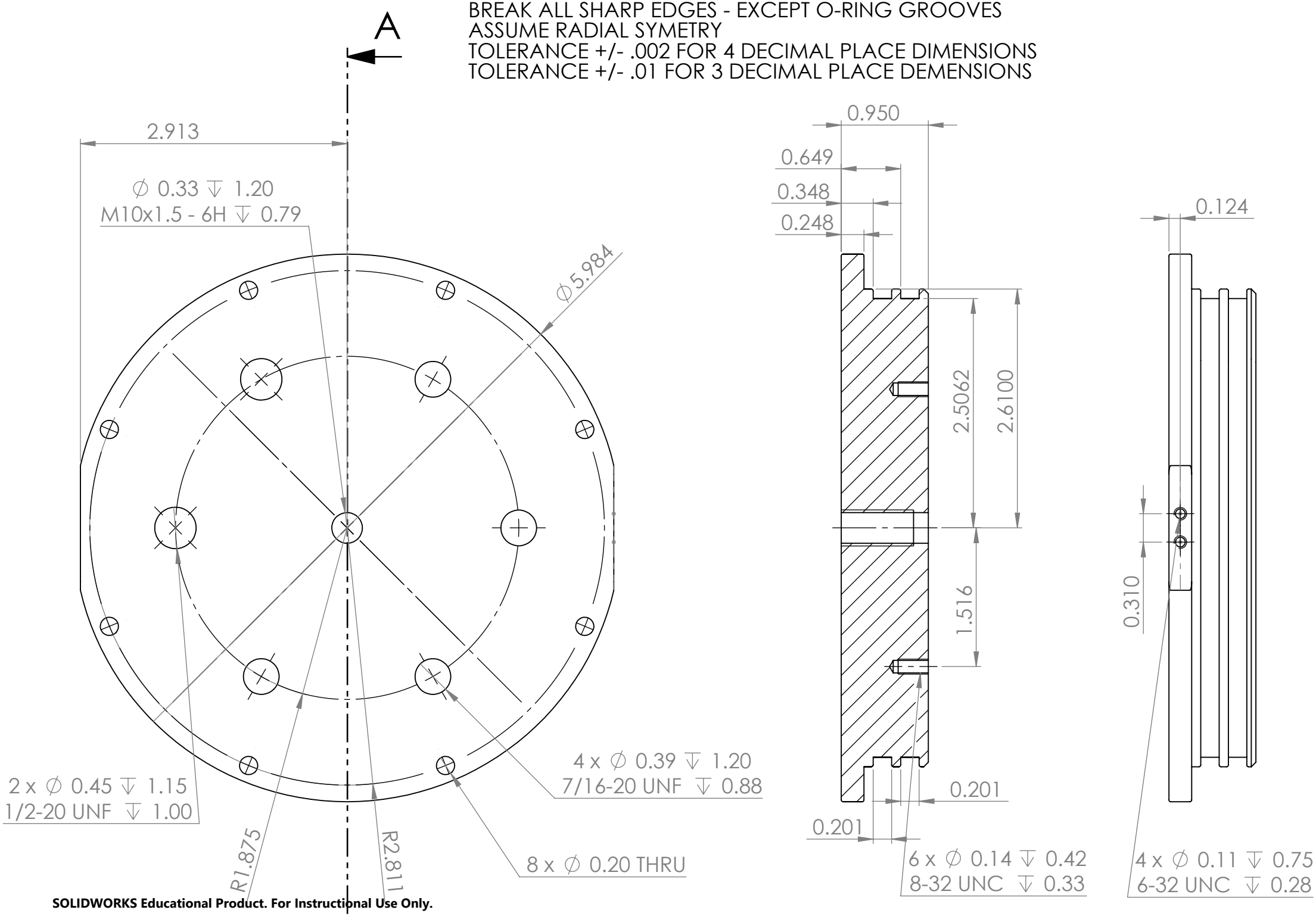

SOLIDWORKS Educational Product. For Instructional Use Only.