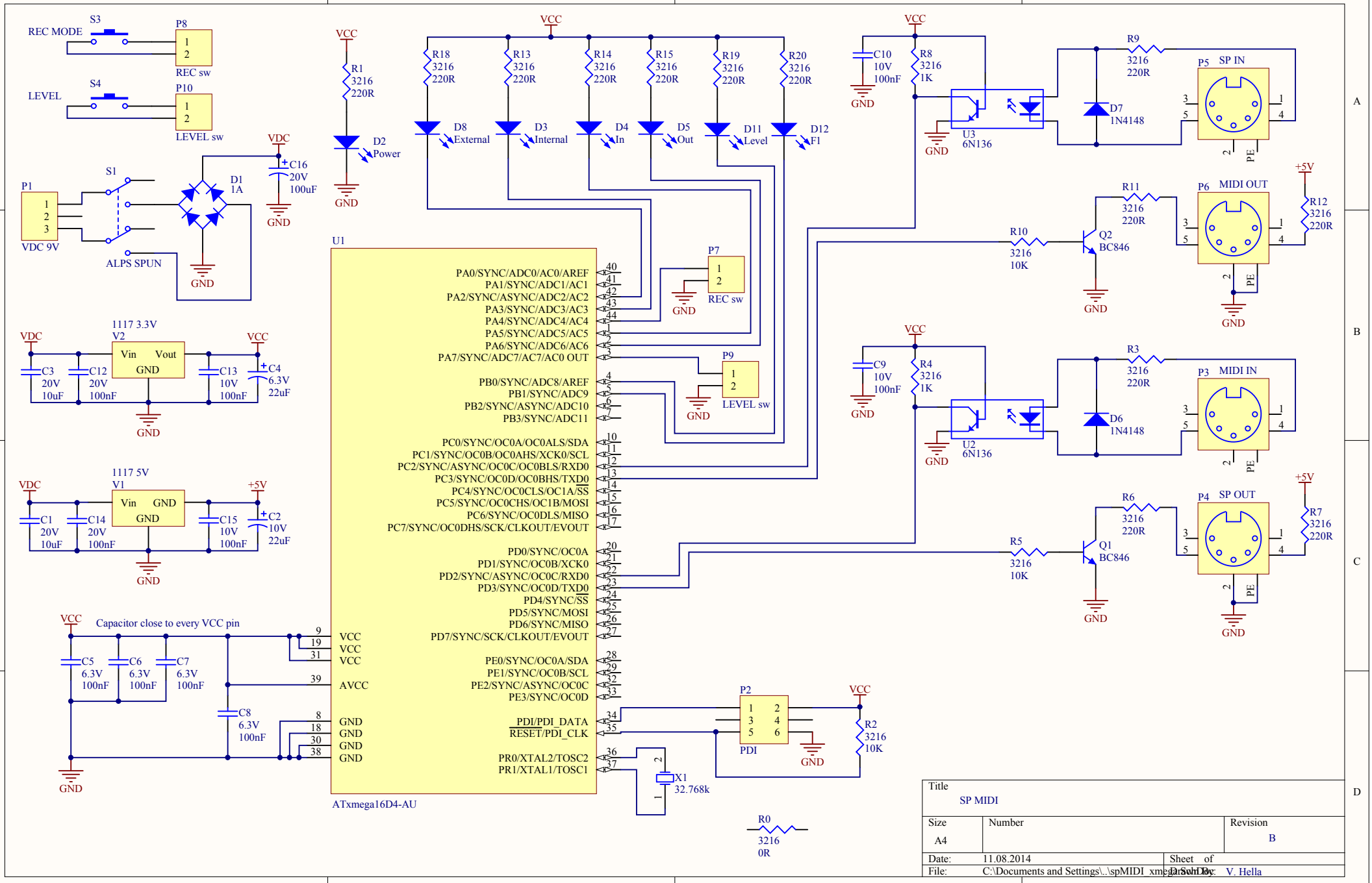
REC MODE
S3
P8
REC sw
LEVEL
S4
P10
LEVEL sw
P1
VDC 9V
S1
ALPS SPUN
D1
1A
C16
20V
100uF
VDC
GND
VCC
R1
3216
220R
D2
Power
R18
3216
220R
R13
3216
220R
R14
3216
220R
R15
3216
220R
R19
3216
220R
R20
3216
220R
D8
External
D3
Internal
D4
In
D5
Out
D11
Level
D12
F1
C10
10V
100nF
R8
3216
1K
U3
6N136
R9
3216
220R
D7
1N4148
P5
SP IN
PE
R11
3216
220R
P6
MIDI OUT
+5V
R12
3216
220R
R10
3216
10K
Q2
BC846
1117 3.3V
V2
Vin
Vout
GND
C3
20V
10uF
C12
20V
100nF
C13
10V
100nF
C4
6.3V
22uF
U1
PA0/SYNC/ADC0/AC0/AREF
PA1/SYNC/ADC1/AC1
PA2/SYNC/ASYNC/ADC2/AC2
PA3/SYNC/ADC3/AC3
PA4/SYNC/ADC4/AC4
PA5/SYNC/ADC5/AC5
PA6/SYNC/ADC6/AC6
PA7/SYNC/ADC7/AC7/AC0 OUT
PB0/SYNC/ADC8/AREF
PB1/SYNC/ADC9
PB2/SYNC/ASYNC/ADC10
PB3/SYNC/ADC11
PC0/SYNC/OC0A/OC0ALS/SDA
PC1/SYNC/OC0B/OC0AHS/XCK0/SCL
PC2/SYNC/ASYNC/OC0C/OC0BLS/RXD0
PC3/SYNC/OC0D/OC0BHS/TXD0
PC4/SYNC/OC0CLS/OC1A/SS
PC5/SYNC/OC0CHS/OC1B/MOSI
PC6/SYNC/OC0DLS/MISO
PC7/SYNC/OC0DHS/SCK/CLKOUT/EVOUT
PD0/SYNC/OC0A
PD1/SYNC/OC0B/XCK0
PD2/SYNC/ASYNC/OC0C/RXD0
PD3/SYNC/OC0D/TXD0
PD4/SYNC/SS
PD5/SYNC/MOSI
PD6/SYNC/MISO
PD7/SYNC/SCK/CLKOUT/EVOUT
PE0/SYNC/OC0A/SDA
PE1/SYNC/OC0B/SCL
PE2/SYNC/ASYNC/OC0C
PE3/SYNC/OC0D
PDI/PDI_DATA
RESET/PDI_CLK
PR0/XTAL2/TOSC2
PR1/XTAL1/TOSC1
VCC
AVCC
GND
ATxmega16D4-AU
P7
REC sw
P9
LEVEL sw
C9
10V
100nF
R4
3216
1K
U2
6N136
R3
3216
220R
D6
1N4148
P3
MIDI IN
R6
3216
220R
P4
SP OUT
R7
3216
220R
R5
3216
10K
Q1
BC846
1117 5V
V1
C1
20V
10uF
C14
20V
100nF
C15
10V
100nF
C2
10V
22uF
Capacitor close to every VCC pin
C5
6.3V
100nF
C6
6.3V
100nF
C7
6.3V
100nF
C8
6.3V
100nF
P2
PDI
R2
3216
10K
X1
32.768k
R0
3216
0R
Title
SP MIDI
Size
A4
Number
Revision
B
Date:
11.08.2014
Sheet of
File:
C:\Documents and Settings\..\spMIDI_xmega.SchDoc
Drawn by:
V. Hella