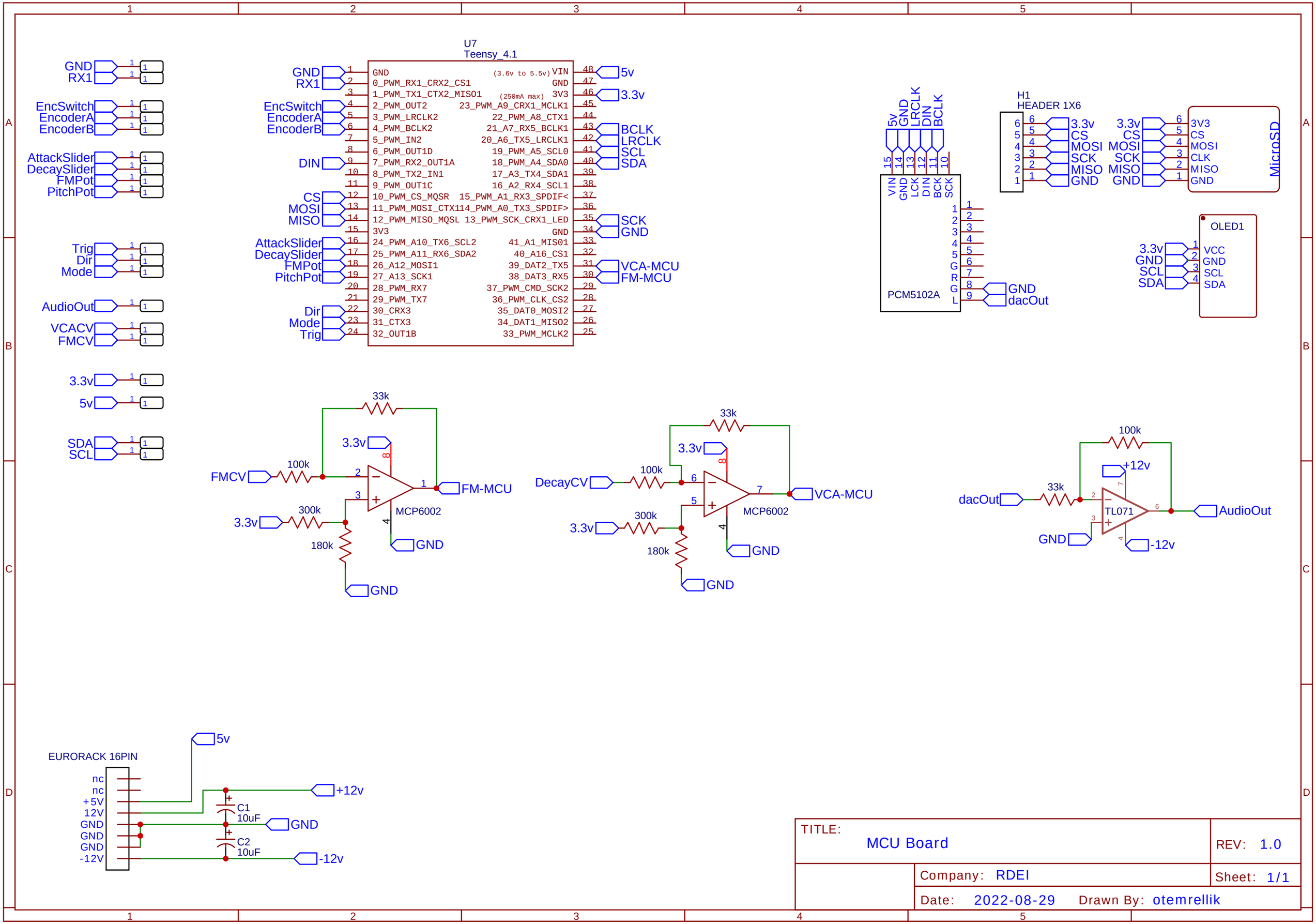

TITLE: MCU Board	REV: 1.0
Company: RDEI	Sheet: 1/1
Date: 2022-08-29 Drawn By: otemrellik	