Associated Spring
RAYMOND
A business of BARNES GROUP INC

ENGINEERED SOLUTIONS DELIVERED ON TIME

SPEC®
Stock Precision Engineered Components

Compression Springs

Product **Catalogue**
2019

SUPERIOR **SOLUTIONS.** SUPERIOR **SELECTION.**

asraymond.co.uk | asraymond.fr | asraymond.es | asraymond.de | asraymond.com

Associated Spring RAYMOND

Associated Spring RAYMOND has a storied history of supplying leading edge innovators with solutions for over 135 years. Our engineering team today builds on the knowledge and expertise of supplying both traditional and cutting edge industries with solutions for motion control, pressure & vibration, among others. Additionally, we can manufacture to your print (special order component) if you have already designed a solution or provide you with a standard product from our superior catalog of options.

For information on our policies or to learn more about design applications and industry terminology, visit **WWW.ASRAYMOND.COM/FAQ**

In addition to the products described in this catalog, Associated Spring RAYMOND – a worldwide leader in the design, manufacture and sale of springs – also offers a full line of struts, stock springs, washers, hardware and tool & die components.

SPEC Stock Springs & Washers Product Catalogue

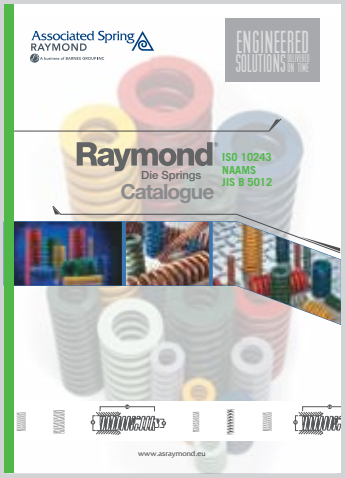

Die Springs Master Catalogue

Counterbalance Solutions Catalogue

TABLE OF CONTENTS

Compression Springs ..... 6 - 258
- OD 0.047 - 0.353 ..... 7 - 55
- OD 0.353 - 0.588 ..... 56 - 105
- OD 0.588 - 0.970 ..... 106 - 155
- OD 0.970 - 1.410 ..... 156 - 205
- OD 1.410 - 2.820 ..... 206 - 258

316 Stainless Steel Compression Springs ..... 259 - 299

Heavy Duty Compression Springs ..... 300 - 306

Conical Compression Springs ..... 307 - 308

MultiWave Compression Springs ..... 309 - 310

Alternative Finishes 311

Custom-Engineered Parts and Special Orders ..... 312 - 313

Terms of Sale 324

International Locations 325

INTRODUCING the Largest Selection of Compression Springs Available Anywhere!

- Over 33,000 Standard Catalog Compression Spring Options
- Nearly Every Feasible Option from .047 to 2.82 OD
- Reduced Cost and Lead Time Compared to Custom Designs

Visit www.ASRAYMOND.com for Pricing.

FOR INFORMATION ON ALTERNATIVE FINISHES, SEE PAGE 311

COMPRESSION SPRINGS

Stock sizes in music wire and stainless steel
Associated Spring RAYMOND provides design engineers, draftsmen, production and maintenance departments with a broad variety of precision-engineered helical compression springs. They are reliable, inexpensive and efficient – the right combination for general-purpose use throughout industry.

Material
Part numbers starting with **C** in the following pages:
Music wire: ASTM A228 **or** AMS 5112
Stainless steel: Type 302 per ASTM A313 **or** AMS 5688 spring temper (Chemical and Physical only)

Part numbers starting with **D** in the following pages:
Music wire: DIN 17223 **or** EN 10270-1 **or** JIS G4314 SWP-A/B **or** AMS 5112
Stainless steel: Type 301, 302 **or** 304 per DIN 17224 **or** EN 10270-3 **or** JIS G4314 SUS 302/304 **or** AMS 5688 spring temper (chemical and physical only)

Music wire will be furnished unless stainless steel is specified.
When inquiring or ordering, please use letter "**M**" or letter "**S**" as suffix to designate music wire or stainless steel, respectively.

Music wire springs are not recommended for applications where the temperature exceeds 121 degrees C. (250 degrees F.). Stainless steel is not recommended above 260 degrees C. (500 degrees F.).

Stainless steel is **slightly magnetic** due to cold working during manufacturing. Stainless steel springs may have a slight residue of nickel on the surface of the wire. This is normal and will not affect the function of the part.

Wire diameter is prior to forming.
No charge for certificate of compliance when requested; certificate of chemical analysis available only for part numbers starting with **C** in the following pages (an additional charge applies).

Coil Direction (helix)
Right hand. Coil count is for reference only.

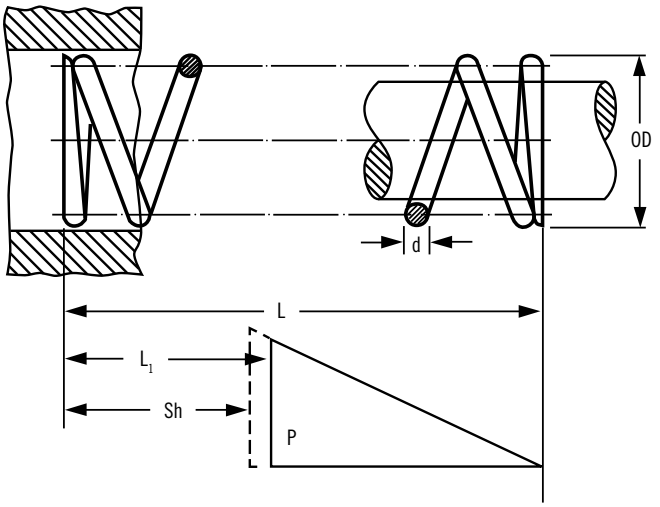

Free Length
Free length is reference only.

Ends
Parts are squared and ground unless denoted with with an *.
Parts ending with an * are squared and not ground.
However, springs with wire diameter ≤ 0.020" (.5mm) may be squared, not ground.

Tolerances
Part numbers starting with **C** in the following pages:

O.D. (English)	O.D. (Metric)
0.057 to 0.119" +/- 0.003"	1.45 to 3.02 mm +/- 0.08 mm
0.120 to 0.240" +/- 0.005"	3.05 to 6.10 mm +/- 0.13 mm
0.241 to 0.500" +/- 0.008"	6.12 to 12.70 mm +/- 0.20 mm
0.501 to 1.000" +/- 0.015"	12.73 to 25.40 mm +/- 0.38 mm
1.001 to 1.225" +/- 0.020"	25.43 to 31.12 mm +/- 0.51 mm
1.226 to 1.460" +/- 0.030"	31.14 to 37.08 mm +/- 0.76 mm
1.461 to 2.000" +/- 0.040"	37.11 to 50.80 mm +/- 1.02 mm

Part numbers starting with **D** in the following pages:
All dimensions, loads and rates listed are to DIN 2095 (Grade 2).

Loads & Spring Rate
Load and rate values are shown for both music wire and stainless steel in their respective columns.

Load P at L_1 and spring rate R are +/- 10.0% – load at any other point is for reference only.

For normal service, springs should not be compressed below L_1 (may take set beyond L_1). Load values at lengths other than L_1 can be approximated by multiplying the proposed deflection by the rate R. P = (L – Lx) x R where Lx is the new load height. Load at Lx should be reference only. Contact our engineering department if more stringent requirements are needed.

Surface Finish
Music wire: oil
Stainless steel: Only part numbers starting with C on the following pages are passivated. All others are plain wire.
Special finishes available upon request. See page 311 for alternative finishes.

Packaging
Parts are bulk-packed. Due to physical characteristics, tangling can occur during transit on wire sizes under .035" (.89mm). Please inquire about special packaging when ordering.

OD= Outside diameter
d = Wire diameter
Sh = Approx Solid Height
L = Free length (reference use only)
L_1 = Loaded length (minimum working length)
P = Load at L_1

SPEC Compression springs are also available in various materials such as:
- Hard Drawn Steel
- Oil Tempered Wire
- Chrome Vanadium
- Chrome Silicon
- Phosphor Bronze
- Inconel®
- Monel®
- Beryllium Copper
- Elgiloy®
- Zinc Coated Music Wire

Part numbers in bold represent the newly expanded Associated Spring RAYMOND compression spring offering.

MUSIC WIRE															STAINLESS STEEL					
Catalog #	Outside Diameter (OD)		Wire Diameter (d)		Free Length (L) Approx		Load Length (L_1)		Solid Height (Sh) Approx		Load (P) at L_1		Spring Rate (R)		Catalog #	Load Length (L_1)		Load (P) at L_1		Spring Rate (R)	
	in	mm	in	mm	in	mm	in	mm	in	mm	lb	N	lb/in	N/mm		in	mm	lb	N	lb/in	N/mm
D10100*	0.047	1.20	0.008	0.20	0.079	2.00	0.055	1.40	0.051	1.30	0.58	2.57	28.06	4.91	D20100*	0.055	1.40	0.48	2.14	23.37	4.09
D10110*	0.047	1.20	0.008	0.20	0.106	2.70	0.075	1.90	0.067	1.70	0.58	2.57	17.83	3.12	D20110*	0.075	1.90	0.48	2.14	14.86	2.60
D10120*	0.047	1.20	0.008	0.20	0.154	3.90	0.102	2.60	0.091	2.30	0.58	2.57	11.60	2.03	D20120*	0.102	2.60	0.48	2.14	9.66	1.69
D10130*	0.047	1.20	0.008	0.20	0.217	5.50	0.142	3.60	0.122	3.10	0.58	2.57	7.89	1.38	D20130*	0.142	3.60	0.48	2.14	6.57	1.15
D10140*	0.047	1.20	0.008	0.20	0.307	7.80	0.197	5.00	0.169	4.30	0.58	2.57	5.26	0.92	D20140*	0.197	5.00	0.48	2.14	4.40	0.77
D10150*	0.055	1.40	0.008	0.20	0.091	2.30	0.059	1.50	0.051	1.30	0.51	2.27	16.17	2.83	D20150*	0.059	1.50	0.43	1.89	13.49	2.36
D10160*	0.055	1.40	0.008	0.20	0.126	3.20	0.075	1.90	0.067	1.70	0.51	2.27	10.34	1.81	D20160*	0.075	1.90	0.43	1.89	8.63	1.51
D10170*	0.055	1.40	0.008	0.20	0.181	4.60	0.106	2.70	0.091	2.30	0.51	2.27	6.63	1.16	D20170*	0.106	2.70	0.43	1.89	5.54	0.97
D10180*	0.055	1.40	0.008	0.20	0.256	6.50	0.146	3.70	0.122	3.10	0.51	2.27	4.57	0.80	D20180*	0.146	3.70	0.43	1.89	3.83	0.67
D10190*	0.055	1.40	0.008	0.20	0.366	9.30	0.201	5.10	0.169	4.30	0.51	2.27	3.09	0.54	D20190*	0.201	5.10	0.43	1.89	2.57	0.45
C0057-006-0120-M*	0.057	1.45	0.006	0.15	0.120	3.05	0.059	1.50	0.044	1.12	0.23	1.02	3.80	0.67	C0057-006-0120-S*	0.076	1.94	0.14	0.62	3.17	0.55
C0057-006-0190-M*	0.057	1.45	0.006	0.15	0.190	4.83	0.085	2.16	0.060	1.52	0.23	1.02	2.20	0.39	C0057-006-0190-S*	0.115	2.91	0.14	0.62	1.83	0.32
C0057-006-0250-M*	0.057	1.45	0.006	0.15	0.250	6.35	0.106	2.69	0.075	1.91	0.23	1.02	1.60	0.28	C0057-006-0250-S*	0.146	3.71	0.14	0.62	1.33	0.23
C0057-006-0310-M*	0.057	1.45	0.006	0.15	0.310	7.87	0.133	3.38	0.088	2.24	0.23	1.02	1.30	0.23	C0057-006-0310-S*	0.182	4.63	0.14	0.62	1.08	0.19
C0057-006-0380-M*	0.057	1.45	0.006	0.15	0.380	9.65	0.171	4.34	0.100	2.54	0.23	1.02	1.10	0.19	C0057-006-0380-S*	0.229	5.82	0.14	0.62	0.92	0.16
C0057-006-0440-M*	0.057	1.45	0.006	0.15	0.440	11.18	0.184	4.67	0.118	3.00	0.23	1.02	0.90	0.16	C0057-006-0440-S*	0.255	6.49	0.14	0.62	0.75	0.13
C0057-006-0500-M*	0.057	1.45	0.006	0.15	0.500	12.70	0.213	5.41	0.130	3.30	0.23	1.02	0.80	0.14	C0057-006-0500-S*	0.292	7.43	0.14	0.62	0.67	0.12
C0057-006-0560-M*	0.057	1.45	0.006	0.15	0.560	14.22	0.273	6.93	0.129	3.28	0.23	1.02	0.80	0.14	C0057-006-0560-S*	0.352	8.95	0.14	0.62	0.67	0.12
C0057-006-0620-M*	0.057	1.45	0.006	0.15	0.620	15.75	0.291	7.39	0.142	3.61	0.23	1.02	0.70	0.12	C0057-006-0620-S*	0.383	9.72	0.14	0.62	0.58	0.10
C0057-007-0120-M*	0.057	1.45	0.007	0.18	0.120	3.05	0.066	1.68	0.053	1.35	0.38	1.69	7.00	1.23	C0057-007-0120-S*	0.083	2.10	0.22	0.97	5.83	1.02
C0057-007-0190-M*	0.057	1.45	0.007	0.18	0.190	4.83	0.095	2.41	0.074	1.88	0.38	1.69	4.00	0.70	C0057-007-0190-S*	0.125	3.17	0.22	0.97	3.33	0.58
C0057-007-0250-M*	0.057	1.45	0.007	0.18	0.250	6.35	0.127	3.23	0.089	2.26	0.38	1.69	3.10	0.54	C0057-007-0250-S*	0.166	4.21	0.22	0.97	2.58	0.45
C0057-007-0310-M*	0.057	1.45	0.007	0.18	0.310	7.87	0.152	3.86	0.108	2.74	0.38	1.69	2.40	0.42	C0057-007-0310-S*	0.201	5.11	0.22	0.97	2.00	0.35
C0057-007-0380-M*	0.057	1.45	0.007	0.18	0.380	9.65	0.180	4.57	0.130	3.30	0.38	1.69	1.90	0.33	C0057-007-0380-S*	0.243	6.16	0.22	0.97	1.58	0.28
C0057-007-0440-M*	0.057	1.45	0.007	0.18	0.440	11.18	0.216	5.49	0.143	3.63	0.38	1.69	1.70	0.30	C0057-007-0440-S*	0.286	7.28	0.22	0.97	1.42	0.25
C0057-007-0500-M*	0.057	1.45	0.007	0.18	0.500	12.70	0.247	6.27	0.158	4.01	0.38	1.69	1.50	0.26	C0057-007-0500-S*	0.326	8.28	0.22	0.97	1.25	0.22
C0057-007-0560-M*	0.057	1.45	0.007	0.18	0.560	14.22	0.266	6.76	0.179	4.55	0.38	1.69	1.30	0.23	C0057-007-0560-S*	0.359	9.12	0.22	0.97	1.08	0.19
C0057-007-0620-M*	0.057	1.45	0.007	0.18	0.620	15.75	0.303	7.70	0.188	4.78	0.38	1.69	1.20	0.21	C0057-007-0620-S*	0.403	10.22	0.22	0.97	1.00	0.18
C0057-008-0120-M*	0.057	1.45	0.008	0.20	0.120	3.05	0.072	1.83	0.061	1.55	0.60	2.67	12.50	2.19	C0057-008-0120-S*	0.089	2.27	0.32	1.43	10.41	1.82
C0057-008-0190-M*	0.057	1.45	0.008	0.20	0.190	4.83	0.107	2.72	0.086	2.18	0.60	2.67	7.20	1.26	C0057-008-0190-S*	0.136	3.47	0.32	1.43	6.00	1.05
C0057-008-0250-M*	0.057	1.45	0.008	0.20	0.250	6.35	0.137	3.48	0.106	2.69	0.60	2.67	5.30	0.93	C0057-008-0250-S*	0.177	4.50	0.32	1.43	4.41	0.77
C0057-008-0310-M*	0.057	1.45	0.008	0.20	0.310	7.87	0.167	4.24	0.127	3.23	0.60	2.67	4.20	0.74	C0057-008-0310-S*	0.218	5.54	0.32	1.43	3.50	0.61
C0057-008-0380-M*	0.057	1.45	0.008	0.20	0.380	9.65	0.203	5.16	0.150	3.81	0.60	2.67	3.40	0.60	C0057-008-0380-S*	0.267	6.77	0.32	1.43	2.83	0.50
C0057-008-0440-M*	0.057	1.45	0.008	0.20	0.440	11.18	0.233	5.92	0.172	4.37	0.60	2.67	2.90	0.51	C0057-008-0440-S*	0.307	7.80	0.32	1.43	2.42	0.42
C0057-008-0500-M*	0.057	1.45	0.008	0.20	0.500	12.70	0.260	6.60	0.195	4.95	0.60	2.67	2.50	0.44	C0057-008-0500-S*	0.346	8.79	0.32	1.43	2.08	0.36
C0057-008-0560-M*	0.057	1.45	0.008	0.20	0.560	14.22	0.287	7.29	0.217	5.51	0.60	2.67	2.20	0.39	C0057-008-0560-S*	0.385	9.78	0.32	1.43	1.83	0.32
C0057-008-0620-M*	0.057	1.45	0.008	0.20	0.620	15.75	0.320	8.13	0.224	5.69	0.60	2.67	2.00	0.35	C0057-008-0620-S*	0.427	10.86	0.32	1.43	1.67	0.29
D10350*	0.057	1.45	0.010	0.25	0.094	2.40	0.071	1.80	0.064	1.63	0.92	4.11	39.71	6.95	D20350*	0.071	1.80	0.77	3.43	33.09	5.79
D10360*	0.057	1.45	0.010	0.25	0.130	3.30	0.094	2.40	0.084	2.13	0.92	4.11	25.26	4.42	D20360*	0.094	2.40	0.77	3.43	21.03	3.68
D10370*	0.057	1.45	0.010	0.25	0.185	4.70	0.130	3.30	0.113	2.88	0.92	4.11	16.34	2.86	D20370*	0.130	3.30	0.77	3.43	13.60	2.38
D10380*	0.057	1.45	0.010	0.25	0.260	6.60	0.177	4.50	0.153	3.88	0.92	4.11	11.09	1.94	D20380*	0.177	4.50	0.77	3.43	9.26	1.62
D10390*	0.057	1.45	0.010	0.25	0.370	9.40	0.248	6.30	0.212	5.38	0.92	4.11	7.54	1.32	D20390*	0.248	6.30	0.77	3.43	6.29	1.10
C0059-010-0125-M*	**0.059**	**1.50**	**0.010**	**0.25**	**0.125**	**3.18**	**0.088**	**2.22**	**0.085**	**2.16**	**0.90**	**4.00**	**23.99**	**4.20**	**C0059-010-0125-S***	**0.093**	**2.35**	**0.68**	**3.01**	**20.86**	**3.65**
C0059-010-0188-M*	**0.059**	**1.50**	**0.010**	**0.25**	**0.188**	**4.76**	**0.125**	**3.19**	**0.120**	**3.05**	**0.90**	**4.00**	**14.47**	**2.53**	**C0059-010-0188-S***	**0.134**	**3.40**	**0.68**	**3.01**	**12.58**	**2.20**
C0059-010-0250-M*	**0.059**	**1.50**	**0.010**	**0.25**	**0.250**	**6.35**	**0.163**	**4.15**	**0.155**	**3.95**	**0.90**	**4.00**	**10.36**	**1.81**	**C0059-010-0250-S***	**0.175**	**4.44**	**0.68**	**3.01**	**9.01**	**1.58**
C0059-010-0313-M*	**0.059**	**1.50**	**0.010**	**0.25**	**0.313**	**7.94**	**0.201**	**5.11**	**0.191**	**4.84**	**0.90**	**4.00**	**8.07**	**1.41**	**C0059-010-0313-S***	**0.216**	**5.49**	**0.68**	**3.01**	**7.01**	**1.23**
C0059-010-0375-M*	**0.059**	**1.50**	**0.010**	**0.25**	**0.375**	**9.53**	**0.239**	**6.07**	**0.226**	**5.73**	**0.90**	**4.00**	**6.61**	**1.16**	**C0059-010-0375-S***	**0.257**	**6.54**	**0.68**	**3.01**	**5.74**	**1.00**
C0059-010-0438-M*	**0.059**	**1.50**	**0.010**	**0.25**	**0.438**	**11.11**	**0.277**	**7.03**	**0.261**	**6.63**	**0.90**	**4.00**	**5.59**	**0.98**	**C0059-010-0438-S***	**0.299**	**7.58**	**0.68**	**3.01**	**4.86**	**0.85**
C0059-010-0500-M*	**0.059**	**1.50**	**0.010**	**0.25**	**0.500**	**12.70**	**0.315**	**7.99**	**0.296**	**7.52**	**0.90**	**4.00**	**4.85**	**0.85**	**C0059-010-0500-S***	**0.340**	**8.63**	**0.68**	**3.01**	**4.22**	**0.74**
C0059-010-0563-M*	**0.059**	**1.50**	**0.010**	**0.25**	**0.563**	**14.29**	**0.353**	**8.96**	**0.331**	**8.42**	**0.90**	**4.00**	**4.28**	**0.75**	**C0059-010-0563-S***	**0.381**	**9.68**	**0.68**	**3.01**	**3.72**	**0.65**
C0059-010-0625-M*	**0.059**	**1.50**	**0.010**	**0.25**	**0.625**	**15.88**	**0.390**	**9.92**	**0.366**	**9.31**	**0.90**	**4.00**	**3.83**	**0.67**	**C0059-010-0625-S***	**0.422**	**10.72**	**0.68**	**3.01**	**3.33**	**0.58**
C0059-010-0688-M*	**0.059**	**1.50**	**0.010**	**0.25**	**0.688**	**17.46**	**0.428**	**10.88**	**0.402**	**10.20**	**0.90**	**4.00**	**3.47**	**0.61**	**C0059-010-0688-S***	**0.463**	**11.77**	**0.68**	**3.01**	**3.01**	**0.53**
C0059-010-0750-M*	**0.059**	**1.50**	**0.010**	**0.25**	**0.750**	**19.05**	**0.466**	**11.84**	**0.437**	**11.10**	**0.90**	**4.00**	**3.17**	**0.55**	**C0059-010-0750-S***	**0.504**	**12.81**	**0.68**	**3.01**	**2.75**	**0.48**
C0059-010-0813-M*	**0.059**	**1.50**	**0.010**	**0.25**	**0.813**	**20.64**	**0.504**	**12.80**	**0.472**	**11.99**	**0.90**	**4.00**	**2.91**	**0.51**	**C0059-010-0813-S***	**0.546**	**13.86**	**0.68**	**3.01**	**2.53**	**0.44**
C0059-010-0875-M*	**0.059**	**1.50**	**0.010**	**0.25**	**0.875**	**22.23**	**0.542**	**13.76**	**0.507**	**12.88**	**0.90**	**4.00**	**2.70**	**0.47**	**C0059-010-0875-S***	**0.587**	**14.91**	**0.68**	**3.01**	**2.34**	**0.41**
C0059-010-0938-M*	**0.059**	**1.50**	**0.010**	**0.25**	**0.938**	**23.81**	**0.580**	**14.73**	**0.542**	**13.78**	**0.90**	**4.00**	**2.51**	**0.44**	**C0059-010-0938-S***	**0.628**	**15.95**	**0.68**	**3.01**	**2.18**	**0.38**
C0063-010-0125-M*	**0.063**	**1.60**	**0.010**	**0.25**	**0.125**	**3.18**	**0.089**	**2.25**	**0.073**	**1.85**	**0.89**	**3.95**	**24.42**	**4.27**	**C0063-010-0125-S***	**0.094**	**2.38**	**0.64**	**2.84**	**20.34**	**3.56**
C0063-010-0188-M*	**0.063**	**1.60**	**0.010**	**0.25**	**0.188**	**4.78**	**0.128**	**3.24**	**0.101**	**2.55**	**0.89**	**3.95**	**14.68**	**2.57**	**C0063-010-0188-S***	**0.136**	**3.45**	**0.64**	**2.84**	**12.23**	**2.14**
C0063-010-0250-M*	**0.063**	**1.60**	**0.010**	**0.25**	**0.250**	**6.35**	**0.166**	**4.21**	**0.128**	**3.24**	**0.89**	**3.95**	**10.54**	**1.84**	**C0063-010-0250-S***	**0.177**	**4.50**	**0.64**	**2.84**	**8.78**	**1.54**
C0063-010-0313-M*	**0.063**	**1.60**	**0.010**	**0.25**	**0.313**	**7.95**	**0.205**	**5.20**	**0.155**	**3.94**	**0.89**	**3.95**	**8.20**	**1.44**	**C0063-010-0313-S***	**0.220**	**5.58**	**0.64**	**2.84**	**6.83**	**1.20**
C0063-010-0375-M*	**0.063**	**1.60**	**0.010**	**0.25**	**0.375**	**9.53**	**0.243**	**6.17**	**0.182**	**4.63**	**0.89**	**3.95**	**6.72**	**1.18**	**C0063-010-0375-S***	**0.261**	**6.63**	**0.64**	**2.84**	**5.60**	**0.98**
C0063-010-0438-M*	**0.063**	**1.60**	**0.010**	**0.25**	**0.438**	**11.13**	**0.282**	**7.17**	**0.210**	**5.33**	**0.89**	**3.95**	**5.69**	**1.00**	**C0063-010-0438-S***	**0.303**	**7.71**	**0.64**	**2.84**	**4.74**	**0.83**
C0063-010-0500-M*	**0.063**	**1.60**	**0.010**	**0.25**	**0.500**	**12.70**	**0.320**	**8.14**	**0.237**	**6.01**	**0.89**	**3.95**	**4.94**	**0.86**	**C0063-010-0500-S***	**0.345**	**8.76**	**0.64**	**2.84**	**4.12**	**0.72**
C0063-010-0563-M*	**0.063**	**1.60**	**0.010**	**0.25**	**0.563**	**14.30**	**0.359**	**9.12**	**0.265**	**6.72**	**0.89**	**3.95**	**4.35**	**0.76**	**C0063-010-0563-S***	**0.387**	**9.83**	**0.64**	**2.84**	**3.62**	**0.63**

FOR INFORMATION ON ALTERNATIVE FINISHES, SEE PAGE 311

Part Numbers with an "*" are squared and not ground. **Part Numbers in bold** represent the newly expanded Associated Spring RAYMOND compression spring offering.

(OD) 0.063 - 0.091

MUSIC WIRE															STAINLESS STEEL						
Catalog #	Outside Diameter (OD)		Wire Diameter (d)		Free Length (L) Approx		Load Length (L_1)		Solid Height (Sh) Approx		Load (P) at L_1		Spring Rate (R)		Catalog #	Load Length (L_1)		Load (P) at L_1		Spring Rate (R)	
	in	mm	in	mm	in	mm	in	mm	in	mm	lb	N	lb/in	N/mm		in	mm	lb	N	lb/in	N/mm
C0063-010-0625-M*	**0.063**	**1.60**	**0.010**	**0.25**	**0.625**	**15.88**	**0.398**	**10.10**	**0.291**	**7.40**	**0.89**	**3.95**	**3.90**	**0.68**	**C0063-010-0625-S***	**0.429**	**10.89**	**0.64**	**2.84**	**3.25**	**0.57**
D10200*	0.071	1.80	0.008	0.20	0.118	3.00	0.059	1.50	0.051	1.30	0.40	1.80	6.86	1.20	D20200*	0.059	1.50	0.34	1.50	5.71	1.00
D10210*	0.071	1.80	0.008	0.20	0.173	4.40	0.079	2.00	0.067	1.70	0.40	1.80	4.40	0.77	D20210*	0.079	2.00	0.34	1.50	3.66	0.64
D10220*	0.071	1.80	0.008	0.20	0.252	6.40	0.110	2.80	0.091	2.30	0.40	1.80	2.80	0.49	D20220*	0.110	2.80	0.34	1.50	2.34	0.41
D10230*	0.071	1.80	0.008	0.20	0.362	9.20	0.150	3.80	0.122	3.10	0.40	1.80	1.94	0.34	D20230*	0.150	3.80	0.34	1.50	1.60	0.28
D10240*	0.071	1.80	0.008	0.20	0.524	13.30	0.209	5.30	0.169	4.30	0.40	1.80	1.31	0.23	D20240*	0.209	5.30	0.34	1.50	1.09	0.19
D10400*	0.073	1.85	0.010	0.25	0.118	3.00	0.071	1.80	0.064	1.63	0.76	3.37	16.74	2.93	D20400*	0.071	1.80	0.63	2.81	13.94	2.44
D10410*	0.073	1.85	0.010	0.25	0.169	4.30	0.094	2.40	0.084	2.13	0.76	3.37	10.63	1.86	D20410*	0.094	2.40	0.63	2.81	8.86	1.55
D10420*	0.073	1.85	0.010	0.25	0.244	6.20	0.134	3.40	0.113	2.88	0.76	3.37	6.86	1.20	D20420*	0.134	3.40	0.63	2.81	5.71	1.00
D10430*	0.073	1.85	0.010	0.25	0.343	8.70	0.181	4.60	0.153	3.88	0.76	3.37	4.74	0.83	D20430*	0.181	4.60	0.63	2.81	3.94	0.69
D10440*	0.073	1.85	0.010	0.25	0.492	12.50	0.256	6.50	0.212	5.38	0.76	3.37	3.14	0.55	D20440*	0.256	6.50	0.63	2.81	2.63	0.46
D10600*	0.076	1.92	0.013	0.32	0.122	3.10	0.091	2.30	0.082	2.08	1.48	6.57	44.91	7.86	D20600*	0.091	2.30	1.23	5.47	37.43	6.55
D10610*	0.076	1.92	0.013	0.32	0.173	4.40	0.122	3.10	0.107	2.72	1.48	6.57	28.57	5.00	D20610*	0.122	3.10	1.23	5.47	23.83	4.17
D10620*	0.076	1.92	0.013	0.32	0.248	6.30	0.165	4.20	0.145	3.68	1.48	6.57	18.51	3.24	D20620*	0.165	4.20	1.23	5.47	15.43	2.70
D10630*	0.076	1.92	0.013	0.32	0.343	8.70	0.228	5.80	0.195	4.96	1.48	6.57	12.57	2.20	D20630*	0.228	5.80	1.23	5.47	10.46	1.83
D10640*	0.076	1.92	0.013	0.32	0.492	12.50	0.319	8.10	0.271	6.88	1.48	6.57	8.51	1.49	D20640*	0.319	8.10	1.23	5.47	7.09	1.24
D10250*	0.087	2.20	0.008	0.20	0.157	4.00	0.059	1.50	0.051	1.30	0.33	1.49	3.49	0.61	D20250*	0.059	1.50	0.28	1.24	2.91	0.51
D10260*	0.087	2.20	0.008	0.20	0.232	5.90	0.083	2.10	0.067	1.70	0.33	1.49	2.17	0.38	D20260*	0.083	2.10	0.28	1.24	1.83	0.32
D10270*	0.087	2.20	0.008	0.20	0.343	8.70	0.114	2.90	0.091	2.30	0.33	1.49	1.43	0.25	D20270*	0.114	2.90	0.28	1.24	1.20	0.21
D10280*	0.087	2.20	0.008	0.20	0.496	12.60	0.157	4.00	0.122	3.10	0.33	1.49	1.03	0.18	D20280*	0.157	4.00	0.28	1.24	0.86	0.15
D10290*	0.087	2.20	0.008	0.20	0.720	18.30	0.220	5.60	0.169	4.30	0.33	1.49	0.69	0.12	D20290*	0.220	5.60	0.28	1.24	0.57	0.10
C0088-008-0120-M*	0.088	2.24	0.008	0.20	0.120	3.05	0.060	1.52	0.043	1.09	0.38	1.69	6.30	1.10	C0088-008-0120-S*	0.079	2.01	0.21	0.95	5.25	0.92
C0088-008-0190-M*	0.088	2.24	0.008	0.20	0.190	4.83	0.081	2.06	0.055	1.40	0.38	1.69	3.50	0.61	C0088-008-0190-S*	0.117	2.96	0.21	0.95	2.92	0.51
C0088-008-0250-M*	0.088	2.24	0.008	0.20	0.250	6.35	0.104	2.64	0.064	1.63	0.38	1.69	2.60	0.46	C0088-008-0250-S*	0.151	3.84	0.21	0.95	2.17	0.38
C0088-008-0310-M*	0.088	2.24	0.008	0.20	0.310	7.87	0.129	3.28	0.073	1.85	0.38	1.69	2.10	0.37	C0088-008-0310-S*	0.188	4.77	0.21	0.95	1.75	0.31
C0088-008-0380-M*	0.088	2.24	0.008	0.20	0.380	9.65	0.156	3.96	0.084	2.13	0.38	1.69	1.70	0.30	C0088-008-0380-S*	0.229	5.81	0.21	0.95	1.42	0.25
C0088-008-0440-M*	0.088	2.24	0.008	0.20	0.440	11.18	0.187	4.75	0.092	2.34	0.38	1.69	1.50	0.26	C0088-008-0440-S*	0.269	6.82	0.21	0.95	1.25	0.22
C0088-008-0500-M*	0.088	2.24	0.008	0.20	0.500	12.70	0.208	5.28	0.101	2.57	0.38	1.69	1.30	0.23	C0088-008-0500-S*	0.302	7.68	0.21	0.95	1.08	0.19
C0088-008-0560-M*	0.088	2.24	0.008	0.20	0.560	14.22	0.215	5.46	0.115	2.92	0.38	1.69	1.10	0.19	C0088-008-0560-S*	0.326	8.29	0.21	0.95	0.92	0.16
C0088-008-0620-M*	0.088	2.24	0.008	0.20	0.620	15.75	0.240	6.10	0.119	3.02	0.38	1.69	1.00	0.18	C0088-008-0620-S*	0.363	9.22	0.21	0.95	0.83	0.15
C0088-010-0120-M*	0.088	2.24	0.010	0.25	0.120	3.05	0.071	1.80	0.060	1.52	0.60	2.67	12.30	2.15	C0088-010-0120-S*	0.081	2.05	0.40	1.80	10.25	1.79
C0088-010-0190-M*	0.088	2.24	0.010	0.25	0.190	4.83	0.102	2.59	0.081	2.06	0.60	2.67	6.80	1.19	C0088-010-0190-S*	0.119	3.01	0.40	1.80	5.66	0.99
C0088-010-0250-M*	0.088	2.24	0.010	0.25	0.250	6.35	0.130	3.30	0.098	2.49	0.60	2.67	5.00	0.88	C0088-010-0250-S*	0.153	3.89	0.40	1.80	4.17	0.73
C0088-010-0310-M*	0.088	2.24	0.010	0.25	0.310	7.87	0.152	3.86	0.118	3.00	0.60	2.67	3.80	0.67	C0088-010-0310-S*	0.182	4.63	0.40	1.80	3.17	0.55
C0088-010-0380-M*	0.088	2.24	0.010	0.25	0.380	9.65	0.198	5.03	0.130	3.30	0.60	2.67	3.30	0.58	C0088-010-0380-S*	0.233	5.92	0.40	1.80	2.75	0.48
C0088-010-0440-M*	0.088	2.24	0.010	0.25	0.440	11.18	0.226	5.74	0.147	3.73	0.60	2.67	2.80	0.49	C0088-010-0440-S*	0.267	6.78	0.40	1.80	2.33	0.41
C0088-010-0500-M*	0.088	2.24	0.010	0.25	0.500	12.70	0.239	6.07	0.172	4.37	0.60	2.67	2.30	0.40	C0088-010-0500-S*	0.289	7.35	0.40	1.80	1.92	0.34
C0088-010-0560-M*	0.088	2.24	0.010	0.25	0.560	14.22	0.274	6.96	0.185	4.70	0.60	2.67	2.10	0.37	C0088-010-0560-S*	0.329	8.36	0.40	1.80	1.75	0.31
C0088-010-0620-M*	0.088	2.24	0.010	0.25	0.620	15.75	0.304	7.72	0.201	5.11	0.60	2.67	1.90	0.33	C0088-010-0620-S*	0.365	9.27	0.40	1.80	1.58	0.28
C0088-010-0690-M*	0.088	2.24	0.010	0.25	0.690	17.53	0.337	8.56	0.213	5.41	0.60	2.67	1.70	0.30	C0088-010-0690-S*	0.405	10.28	0.40	1.80	1.42	0.25
C0088-010-0750-M*	0.088	2.24	0.010	0.25	0.750	19.05	0.375	9.53	0.228	5.79	0.60	2.67	1.60	0.28	C0088-010-0750-S*	0.447	11.35	0.40	1.80	1.33	0.23
C0088-010-0875-M*	**0.088**	**2.24**	**0.010**	**0.25**	**0.875**	**22.23**	**0.424**	**10.77**	**0.251**	**6.37**	**0.65**	**2.91**	**1.45**	**0.25**	**C0088-010-0875-S***	**0.486**	**12.33**	**0.47**	**2.09**	**1.21**	**0.21**
C0088-010-1000-M*	**0.088**	**2.24**	**0.010**	**0.25**	**1.000**	**25.40**	**0.497**	**12.62**	**0.276**	**7.01**	**0.65**	**2.91**	**1.30**	**0.23**	**C0088-010-1000-S***	**0.566**	**14.37**	**0.47**	**2.09**	**1.08**	**0.19**
C0088-012-0120-M*	0.088	2.24	0.012	0.31	0.120	3.05	0.077	1.96	0.075	1.91	1.07	4.76	24.60	4.31	C0088-012-0120-S*	0.087	2.21	0.68	3.02	20.49	3.59
C0088-012-0190-M*	0.088	2.24	0.012	0.31	0.190	4.83	0.116	2.95	0.100	2.54	1.07	4.76	14.50	2.54	C0088-012-0190-S*	0.134	3.40	0.68	3.02	12.08	2.11
C0088-012-0250-M*	0.088	2.24	0.012	0.31	0.250	6.35	0.148	3.76	0.123	3.12	1.07	4.76	10.50	1.84	C0088-012-0250-S*	0.172	4.38	0.68	3.02	8.75	1.53
C0088-012-0310-M*	0.088	2.24	0.012	0.31	0.310	7.87	0.176	4.47	0.148	3.76	1.07	4.76	8.00	1.40	C0088-012-0310-S*	0.208	5.28	0.68	3.02	6.66	1.17
C0088-012-0380-M*	0.088	2.24	0.012	0.31	0.380	9.65	0.216	5.49	0.172	4.37	1.07	4.76	6.50	1.14	C0088-012-0380-S*	0.254	6.46	0.68	3.02	5.41	0.95
C0088-012-0440-M*	0.088	2.24	0.012	0.31	0.440	11.18	0.252	6.40	0.191	4.85	1.07	4.76	5.70	1.00	C0088-012-0440-S*	0.297	7.54	0.68	3.02	4.75	0.83
C0088-012-0500-M*	0.088	2.24	0.012	0.31	0.500	12.70	0.282	7.16	0.215	5.46	1.07	4.76	4.90	0.86	C0088-012-0500-S*	0.334	8.47	0.68	3.02	4.08	0.71
C0088-012-0560-M*	0.088	2.24	0.012	0.31	0.560	14.22	0.317	8.05	0.235	5.97	1.07	4.76	4.40	0.77	C0088-012-0560-S*	0.375	9.51	0.68	3.02	3.67	0.64
C0088-012-0620-M*	0.088	2.24	0.012	0.31	0.620	15.75	0.338	8.59	0.265	6.73	1.07	4.76	3.80	0.67	C0088-012-0620-S*	0.405	10.30	0.68	3.02	3.17	0.55
C0088-012-0690-M*	0.088	2.24	0.012	0.31	0.690	17.53	0.384	9.75	0.266	6.76	1.07	4.76	3.50	0.61	C0088-012-0690-S*	0.457	11.61	0.68	3.02	2.92	0.51
C0088-012-0750-M*	0.088	2.24	0.012	0.31	0.750	19.05	0.416	10.57	0.293	7.44	1.07	4.76	3.20	0.56	C0088-012-0750-S*	0.495	12.57	0.68	3.02	2.67	0.47
C0088-012-0875-M*	**0.088**	**2.24**	**0.012**	**0.31**	**0.875**	**22.23**	**0.486**	**12.34**	**0.343**	**8.72**	**1.09**	**4.85**	**2.80**	**0.49**	**C0088-012-0875-S***	**0.536**	**13.61**	**0.79**	**3.52**	**2.33**	**0.41**
C0088-012-1000-M*	**0.088**	**2.24**	**0.012**	**0.31**	**1.000**	**25.40**	**0.546**	**13.87**	**0.394**	**10.02**	**1.09**	**4.85**	**2.40**	**0.42**	**C0088-012-1000-S***	**0.604**	**15.35**	**0.79**	**3.52**	**2.00**	**0.35**
D10450*	0.089	2.25	0.010	0.25	0.146	3.70	0.075	1.90	0.064	1.63	0.63	2.81	8.57	1.50	D20450*	0.075	1.90	0.53	2.34	7.14	1.25
D10460*	0.089	2.25	0.010	0.25	0.217	5.50	0.098	2.50	0.084	2.13	0.63	2.81	5.43	0.95	D20460*	0.098	2.50	0.53	2.34	4.51	0.79
D10470*	0.089	2.25	0.010	0.25	0.315	8.00	0.138	3.50	0.113	2.88	0.63	2.81	3.49	0.61	D20470*	0.138	3.50	0.53	2.34	2.91	0.51
D10480*	0.089	2.25	0.010	0.25	0.449	11.40	0.185	4.70	0.153	3.88	0.63	2.81	2.40	0.42	D20480*	0.185	4.70	0.53	2.34	2.00	0.35
D10490*	0.089	2.25	0.010	0.25	0.654	16.60	0.264	6.70	0.212	5.38	0.63	2.81	1.66	0.29	D20490*	0.264	6.70	0.53	2.34	1.37	0.24
D10650*	0.091	2.32	0.013	0.32	0.146	3.70	0.091	2.30	0.082	2.08	1.27	5.63	22.97	4.02	D20650*	0.091	2.30	1.05	4.69	19.14	3.35
D10660*	0.091	2.32	0.013	0.32	0.209	5.30	0.122	3.10	0.107	2.72	1.27	5.63	14.69	2.57	D20660*	0.122	3.10	1.05	4.69	12.23	2.14
D10670*	0.091	2.32	0.013	0.32	0.303	7.70	0.169	4.30	0.145	3.68	1.27	5.63	9.49	1.66	D20670*	0.169	4.30	1.05	4.69	7.89	1.38

Part Numbers with an "*" are squared and not ground. **Part Numbers in bold** represent the newly expanded Associated Spring RAYMOND compression spring offering.

MUSIC WIRE															STAINLESS STEEL					
Catalog #	Outside Diameter (OD)		Wire Diameter (d)		Free Length (L) Approx		Load Length (L_1)		Solid Height (Sh) Approx		Load (P) at L_1		Spring Rate (R)		Catalog #	Load Length (L_1)		Load (P) at L_1		Spring Rate (R)	
	in	mm	in	mm	in	mm	in	mm	in	mm	lb	N	lb/in	N/mm		in	mm	lb	N	lb/in	N/mm
D10680*	0.091	2.32	0.013	0.32	0.429	10.90	0.232	5.90	0.195	4.96	1.27	5.63	6.46	1.13	D20680*	0.232	5.90	1.05	4.69	5.37	0.94
D10690*	0.091	2.32	0.013	0.32	0.614	15.60	0.323	8.20	0.271	6.88	1.27	5.63	4.40	0.77	D20690*	0.323	8.20	1.05	4.69	3.66	0.64
C0094-010-0125-M*	**0.094**	**2.39**	**0.010**	**0.25**	**0.125**	**3.18**	**0.074**	**1.87**	**0.051**	**1.28**	**0.61**	**2.73**	**11.95**	**2.09**	**C0094-010-0125-S***	**0.081**	**2.05**	**0.44**	**1.97**	**9.95**	**1.74**
C0094-010-0188-M*	**0.094**	**2.39**	**0.010**	**0.25**	**0.188**	**4.78**	**0.102**	**2.60**	**0.066**	**1.68**	**0.61**	**2.73**	**7.19**	**1.26**	**C0094-010-0188-S***	**0.114**	**2.90**	**0.44**	**1.97**	**5.99**	**1.05**
C0094-010-0250-M*	**0.094**	**2.39**	**0.010**	**0.25**	**0.250**	**6.35**	**0.131**	**3.32**	**0.081**	**2.05**	**0.61**	**2.73**	**5.16**	**0.90**	**C0094-010-0250-S***	**0.147**	**3.74**	**0.44**	**1.97**	**4.30**	**0.75**
C0094-010-0313-M*	**0.094**	**2.39**	**0.010**	**0.25**	**0.313**	**7.95**	**0.161**	**4.09**	**0.094**	**2.40**	**0.61**	**2.73**	**4.05**	**0.71**	**C0094-010-0313-S***	**0.182**	**4.62**	**0.44**	**1.97**	**3.37**	**0.59**
C0094-010-0375-M*	**0.094**	**2.39**	**0.010**	**0.25**	**0.375**	**9.53**	**0.191**	**4.86**	**0.108**	**2.73**	**0.61**	**2.73**	**3.35**	**0.59**	**C0094-010-0375-S***	**0.217**	**5.50**	**0.44**	**1.97**	**2.79**	**0.49**
C0094-010-0438-M*	**0.094**	**2.39**	**0.010**	**0.25**	**0.438**	**11.13**	**0.223**	**5.66**	**0.121**	**3.06**	**0.61**	**2.73**	**2.86**	**0.50**	**C0094-010-0438-S***	**0.252**	**6.41**	**0.44**	**1.97**	**2.38**	**0.42**
C0094-010-0500-M*	**0.094**	**2.39**	**0.010**	**0.25**	**0.500**	**12.70**	**0.255**	**6.48**	**0.133**	**3.38**	**0.61**	**2.73**	**2.51**	**0.44**	**C0094-010-0500-S***	**0.288**	**7.33**	**0.44**	**1.97**	**2.09**	**0.37**
C0094-010-0563-M*	**0.094**	**2.39**	**0.010**	**0.25**	**0.563**	**14.30**	**0.285**	**7.23**	**0.147**	**3.73**	**0.61**	**2.73**	**2.21**	**0.39**	**C0094-010-0563-S***	**0.323**	**8.20**	**0.44**	**1.97**	**1.84**	**0.32**
C0094-010-0625-M*	**0.094**	**2.39**	**0.010**	**0.25**	**0.625**	**15.88**	**0.314**	**7.99**	**0.160**	**4.07**	**0.61**	**2.73**	**1.98**	**0.35**	**C0094-010-0625-S***	**0.357**	**9.06**	**0.44**	**1.97**	**1.65**	**0.29**
C0094-012-0125-M*	**0.094**	**2.39**	**0.012**	**0.31**	**0.125**	**3.18**	**0.084**	**2.14**	**0.062**	**1.58**	**1.03**	**4.56**	**25.28**	**4.42**	**C0094-012-0125-S***	**0.090**	**2.28**	**0.74**	**3.31**	**21.06**	**3.69**
C0094-012-0188-M*	**0.094**	**2.39**	**0.012**	**0.31**	**0.188**	**4.78**	**0.119**	**3.02**	**0.083**	**2.12**	**1.03**	**4.56**	**14.80**	**2.59**	**C0094-012-0188-S***	**0.128**	**3.24**	**0.74**	**3.31**	**12.33**	**2.16**
C0094-012-0250-M*	**0.094**	**2.39**	**0.012**	**0.31**	**0.250**	**6.35**	**0.153**	**3.90**	**0.102**	**2.59**	**1.03**	**4.56**	**10.61**	**1.86**	**C0094-012-0250-S***	**0.166**	**4.21**	**0.74**	**3.31**	**8.84**	**1.55**
C0094-012-0313-M*	**0.094**	**2.39**	**0.012**	**0.31**	**0.313**	**7.95**	**0.188**	**4.77**	**0.121**	**3.07**	**1.03**	**4.56**	**8.20**	**1.44**	**C0094-012-0313-S***	**0.204**	**5.18**	**0.74**	**3.31**	**6.83**	**1.20**
C0094-012-0375-M*	**0.094**	**2.39**	**0.012**	**0.31**	**0.375**	**9.53**	**0.222**	**5.64**	**0.139**	**3.54**	**1.03**	**4.56**	**6.70**	**1.17**	**C0094-012-0375-S***	**0.242**	**6.13**	**0.74**	**3.31**	**5.58**	**0.98**
C0094-012-0438-M*	**0.094**	**2.39**	**0.012**	**0.31**	**0.438**	**11.13**	**0.257**	**6.52**	**0.158**	**4.02**	**1.03**	**4.56**	**5.65**	**0.99**	**C0094-012-0438-S***	**0.280**	**7.10**	**0.74**	**3.31**	**4.71**	**0.82**
C0094-012-0500-M*	**0.094**	**2.39**	**0.012**	**0.31**	**0.500**	**12.70**	**0.290**	**7.37**	**0.177**	**4.50**	**1.03**	**4.56**	**4.89**	**0.86**	**C0094-012-0500-S***	**0.317**	**8.05**	**0.74**	**3.31**	**4.07**	**0.71**
C0094-012-0563-M*	**0.094**	**2.39**	**0.012**	**0.31**	**0.563**	**14.30**	**0.325**	**8.26**	**0.196**	**4.97**	**1.03**	**4.56**	**4.31**	**0.75**	**C0094-012-0563-S***	**0.355**	**9.03**	**0.74**	**3.31**	**3.59**	**0.63**
C0094-012-0625-M*	**0.094**	**2.39**	**0.012**	**0.31**	**0.625**	**15.88**	**0.359**	**9.13**	**0.214**	**5.44**	**1.03**	**4.56**	**3.86**	**0.68**	**C0094-012-0625-S***	**0.393**	**9.99**	**0.74**	**3.31**	**3.22**	**0.56**
C0094-012-0688-M*	**0.094**	**2.39**	**0.012**	**0.31**	**0.688**	**17.48**	**0.393**	**9.99**	**0.234**	**5.93**	**1.03**	**4.56**	**3.48**	**0.61**	**C0094-012-0688-S***	**0.431**	**10.95**	**0.74**	**3.31**	**2.90**	**0.51**
C0094-012-0750-M*	**0.094**	**2.39**	**0.012**	**0.31**	**0.750**	**19.05**	**0.423**	**10.76**	**0.255**	**6.47**	**1.03**	**4.56**	**3.14**	**0.55**	**C0094-012-0750-S***	**0.465**	**11.82**	**0.74**	**3.31**	**2.62**	**0.46**
C0094-012-0875-M*	**0.094**	**2.39**	**0.012**	**0.31**	**0.875**	**22.23**	**0.491**	**12.47**	**0.293**	**7.44**	**1.03**	**4.56**	**2.67**	**0.47**	**C0094-012-0875-S***	**0.540**	**13.72**	**0.74**	**3.31**	**2.22**	**0.39**
C0094-012-1000-M*	**0.094**	**2.39**	**0.012**	**0.31**	**1.000**	**25.40**	**0.560**	**14.22**	**0.330**	**8.39**	**1.03**	**4.56**	**2.33**	**0.41**	**C0094-012-1000-S***	**0.616**	**15.65**	**0.74**	**3.31**	**1.94**	**0.34**
D10850*	0.094	2.40	0.016	0.40	0.138	3.50	0.106	2.70	0.102	2.60	1.67	7.45	53.20	9.31	D20850*	0.106	2.70	1.40	6.21	44.34	7.76
D10860*	0.094	2.40	0.016	0.40	0.197	5.00	0.146	3.70	0.134	3.40	1.67	7.45	33.60	5.88	D20860*	0.146	3.70	1.40	6.21	28.00	4.90
D10870*	0.094	2.40	0.016	0.40	0.276	7.00	0.201	5.10	0.181	4.60	1.67	7.45	21.89	3.83	D20870*	0.201	5.10	1.40	6.21	18.23	3.19
D10880*	0.094	2.40	0.016	0.40	0.394	10.00	0.276	7.00	0.244	6.20	1.67	7.45	14.91	2.61	D20880*	0.276	7.00	1.40	6.21	12.40	2.17
D10890*	0.094	2.40	0.016	0.40	0.551	14.00	0.390	9.90	0.339	8.60	1.67	7.45	10.06	1.76	D20890*	0.390	9.90	1.40	6.21	8.40	1.47
C0102-010-0250-M*	**0.102**	**2.59**	**0.010**	**0.25**	**0.250**	**6.35**	**0.111**	**2.82**	**0.079**	**2.00**	**0.57**	**2.53**	**4.10**	**0.72**	**C0102-010-0250-S***	**0.130**	**3.31**	**0.41**	**1.82**	**3.42**	**0.60**
C0102-010-0313-M*	**0.102**	**2.59**	**0.010**	**0.25**	**0.313**	**7.95**	**0.135**	**3.43**	**0.092**	**2.34**	**0.57**	**2.53**	**3.20**	**0.56**	**C0102-010-0313-S***	**0.159**	**4.05**	**0.41**	**1.82**	**2.67**	**0.47**
C0102-010-0375-M*	**0.102**	**2.59**	**0.010**	**0.25**	**0.375**	**9.53**	**0.156**	**3.96**	**0.106**	**2.69**	**0.57**	**2.53**	**2.60**	**0.46**	**C0102-010-0375-S***	**0.186**	**4.72**	**0.41**	**1.82**	**2.17**	**0.38**
C0102-010-0438-M*	**0.102**	**2.59**	**0.010**	**0.25**	**0.438**	**11.13**	**0.179**	**4.55**	**0.120**	**3.04**	**0.57**	**2.53**	**2.20**	**0.39**	**C0102-010-0438-S***	**0.215**	**5.45**	**0.41**	**1.82**	**1.83**	**0.32**
C0102-010-0500-M*	**0.102**	**2.59**	**0.010**	**0.25**	**0.500**	**12.70**	**0.200**	**5.09**	**0.134**	**3.39**	**0.57**	**2.53**	**1.90**	**0.33**	**C0102-010-0500-S***	**0.241**	**6.13**	**0.41**	**1.82**	**1.58**	**0.28**
C0102-010-0563-M*	**0.102**	**2.59**	**0.010**	**0.25**	**0.563**	**14.30**	**0.228**	**5.80**	**0.146**	**3.70**	**0.57**	**2.53**	**1.70**	**0.30**	**C0102-010-0563-S***	**0.274**	**6.96**	**0.41**	**1.82**	**1.42**	**0.25**
C0102-010-0625-M*	**0.102**	**2.59**	**0.010**	**0.25**	**0.625**	**15.88**	**0.246**	**6.24**	**0.161**	**4.08**	**0.57**	**2.53**	**1.50**	**0.26**	**C0102-010-0625-S***	**0.297**	**7.55**	**0.41**	**1.82**	**1.25**	**0.22**
C0102-010-0750-M*	**0.102**	**2.59**	**0.010**	**0.25**	**0.750**	**19.05**	**0.276**	**7.00**	**0.193**	**4.90**	**0.57**	**2.53**	**1.20**	**0.21**	**C0102-010-0750-S***	**0.340**	**8.65**	**0.41**	**1.82**	**1.00**	**0.18**
C0102-010-0875-M*	**0.102**	**2.59**	**0.010**	**0.25**	**0.875**	**22.23**	**0.358**	**9.08**	**0.208**	**5.28**	**0.57**	**2.53**	**1.10**	**0.19**	**C0102-010-0875-S***	**0.428**	**10.88**	**0.41**	**1.82**	**0.92**	**0.16**
C0102-010-1000-M*	**0.102**	**2.59**	**0.010**	**0.25**	**1.000**	**25.40**	**0.368**	**9.33**	**0.247**	**6.27**	**0.57**	**2.53**	**0.90**	**0.16**	**C0102-010-1000-S***	**0.454**	**11.53**	**0.41**	**1.82**	**0.75**	**0.13**
C0102-011-0250-M*	**0.102**	**2.59**	**0.011**	**0.28**	**0.250**	**6.35**	**0.128**	**3.25**	**0.088**	**2.22**	**0.74**	**3.31**	**6.10**	**1.07**	**C0102-011-0250-S***	**0.144**	**3.66**	**0.54**	**2.40**	**5.08**	**0.89**
C0102-011-0313-M*	**0.102**	**2.59**	**0.011**	**0.28**	**0.313**	**7.95**	**0.155**	**3.93**	**0.103**	**2.62**	**0.74**	**3.31**	**4.70**	**0.82**	**C0102-011-0313-S***	**0.175**	**4.46**	**0.54**	**2.40**	**3.92**	**0.69**
C0102-011-0375-M*	**0.102**	**2.59**	**0.011**	**0.28**	**0.375**	**9.53**	**0.184**	**4.67**	**0.117**	**2.98**	**0.74**	**3.31**	**3.90**	**0.68**	**C0102-011-0375-S***	**0.209**	**5.31**	**0.54**	**2.40**	**3.25**	**0.57**
C0102-011-0438-M*	**0.102**	**2.59**	**0.011**	**0.28**	**0.438**	**11.13**	**0.212**	**5.39**	**0.132**	**3.36**	**0.74**	**3.31**	**3.30**	**0.58**	**C0102-011-0438-S***	**0.242**	**6.15**	**0.54**	**2.40**	**2.75**	**0.48**
C0102-011-0500-M*	**0.102**	**2.59**	**0.011**	**0.28**	**0.500**	**12.70**	**0.234**	**5.94**	**0.150**	**3.81**	**0.74**	**3.31**	**2.80**	**0.49**	**C0102-011-0500-S***	**0.269**	**6.84**	**0.54**	**2.40**	**2.33**	**0.41**
C0102-011-0563-M*	**0.102**	**2.59**	**0.011**	**0.28**	**0.563**	**14.30**	**0.265**	**6.73**	**0.164**	**4.16**	**0.74**	**3.31**	**2.50**	**0.44**	**C0102-011-0563-S***	**0.304**	**7.73**	**0.54**	**2.40**	**2.08**	**0.36**
C0102-011-0625-M*	**0.102**	**2.59**	**0.011**	**0.28**	**0.625**	**15.88**	**0.287**	**7.28**	**0.181**	**4.60**	**0.74**	**3.31**	**2.20**	**0.39**	**C0102-011-0625-S***	**0.331**	**8.41**	**0.54**	**2.40**	**1.83**	**0.32**
C0102-011-0750-M*	**0.102**	**2.59**	**0.011**	**0.28**	**0.750**	**19.05**	**0.336**	**8.54**	**0.214**	**5.43**	**0.74**	**3.31**	**1.80**	**0.32**	**C0102-011-0750-S***	**0.391**	**9.93**	**0.54**	**2.40**	**1.50**	**0.26**
C0102-011-0875-M*	**0.102**	**2.59**	**0.011**	**0.28**	**0.875**	**22.23**	**0.410**	**10.40**	**0.236**	**6.00**	**0.74**	**3.31**	**1.60**	**0.28**	**C0102-011-0875-S***	**0.471**	**11.96**	**0.54**	**2.40**	**1.33**	**0.23**
C0102-011-1000-M*	**0.102**	**2.59**	**0.011**	**0.28**	**1.000**	**25.40**	**0.468**	**11.89**	**0.265**	**6.73**	**0.74**	**3.31**	**1.40**	**0.25**	**C0102-011-1000-S***	**0.538**	**13.67**	**0.54**	**2.40**	**1.17**	**0.20**
C0102-012-0250-M*	**0.102**	**2.59**	**0.012**	**0.31**	**0.250**	**6.35**	**0.138**	**3.51**	**0.098**	**2.50**	**0.95**	**4.23**	**8.50**	**1.49**	**C0102-012-0250-S***	**0.152**	**3.87**	**0.69**	**3.07**	**7.08**	**1.24**
C0102-012-0313-M*	**0.102**	**2.59**	**0.012**	**0.31**	**0.313**	**7.95**	**0.162**	**4.12**	**0.120**	**3.04**	**0.95**	**4.23**	**6.30**	**1.10**	**C0102-012-0313-S***	**0.181**	**4.61**	**0.69**	**3.07**	**5.25**	**0.92**
C0102-012-0375-M*	**0.102**	**2.59**	**0.012**	**0.31**	**0.375**	**9.53**	**0.192**	**4.88**	**0.137**	**3.48**	**0.95**	**4.23**	**5.20**	**0.91**	**C0102-012-0375-S***	**0.216**	**5.47**	**0.69**	**3.07**	**4.33**	**0.76**
C0102-012-0438-M*	**0.102**	**2.59**	**0.012**	**0.31**	**0.438**	**11.13**	**0.222**	**5.64**	**0.155**	**3.93**	**0.95**	**4.23**	**4.40**	**0.77**	**C0102-012-0438-S***	**0.250**	**6.34**	**0.69**	**3.07**	**3.67**	**0.64**
C0102-012-0500-M*	**0.102**	**2.59**	**0.012**	**0.31**	**0.500**	**12.70**	**0.250**	**6.34**	**0.173**	**4.40**	**0.95**	**4.23**	**3.80**	**0.67**	**C0102-012-0500-S***	**0.282**	**7.16**	**0.69**	**3.07**	**3.17**	**0.55**
C0102-012-0563-M*	**0.102**	**2.59**	**0.012**	**0.31**	**0.563**	**14.30**	**0.275**	**6.98**	**0.194**	**4.93**	**0.95**	**4.23**	**3.30**	**0.58**	**C0102-012-0563-S***	**0.312**	**7.92**	**0.69**	**3.07**	**2.75**	**0.48**
C0102-012-0625-M*	**0.102**	**2.59**	**0.012**	**0.31**	**0.625**	**15.88**	**0.308**	**7.83**	**0.210**	**5.32**	**0.95**	**4.23**	**3.00**	**0.53**	**C0102-012-0625-S***	**0.349**	**8.85**	**0.69**	**3.07**	**2.50**	**0.44**
C0102-012-0750-M*	**0.102**	**2.59**	**0.012**	**0.31**	**0.750**	**19.05**	**0.370**	**9.39**	**0.244**	**6.19**	**0.95**	**4.23**	**2.50**	**0.44**	**C0102-012-0750-S***	**0.418**	**10.62**	**0.69**	**3.07**	**2.08**	**0.36**
C0102-012-0875-M*	**0.102**	**2.59**	**0.012**	**0.31**	**0.875**	**22.23**	**0.422**	**10.73**	**0.283**	**7.19**	**0.95**	**4.23**	**2.10**	**0.37**	**C0102-012-0875-S***	**0.480**	**12.19**	**0.69**	**3.07**	**1.75**	**0.31**
C0102-012-1000-M*	**0.102**	**2.59**	**0.012**	**0.31**	**1.000**	**25.40**	**0.472**	**11.98**	**0.324**	**8.23**	**0.95**	**4.23**	**1.80**	**0.32**	**C0102-012-1000-S***	**0.539**	**13.70**	**0.69**	**3.07**	**1.50**	**0.26**
D10300*	0.106	2.70	0.008	0.20	0.213	5.40	0.063	1.60	0.051	1.30	0.27	1.20	1.77	0.31	D20300*	0.063	1.60	0.22	1.00	1.49	0.26
D10310*	0.106	2.70	0.008	0.20	0.323	8.20	0.087	2.20	0.067	1.70	0.27	1.20	1.14	0.20	D20310*	0.087	2.20	0.22	1.00	0.97	0.17
D10320*	0.106	2.70	0.008	0.20	0.488	12.40	0.122	3.10	0.091	2.30	0.27	1.20	0.74	0.13	D20320*	0.122	3.10	0.22	1.00	0.63	0.11
D10330*	0.106	2.70	0.008	0.20	0.705	17.90	0.165	4.20	0.122	3.10	0.27	1.20	0.46	0.08	D20330*	0.165	4.20	0.22	1.00	0.40	0.07
D10340*	0.106	2.70	0.008	0.20	1.031	26.20	0.232	5.90	0.169	4.30	0.27	1.20	0.34	0.06	D20340*	0.232	5.90	0.22	1.00	0.29	0.05

FOR INFORMATION ON ALTERNATIVE FINISHES, SEE PAGE 311

Part Numbers with an "*" are squared and not ground. **Part Numbers in bold** represent the newly expanded Associated Spring RAYMOND compression spring offering.

(OD) 0.108 - 0.118

MUSIC WIRE															STAINLESS STEEL						
Catalog #	Outside Diameter (OD)		Wire Diameter (d)		Free Length (L) Approx		Load Length (L_1)		Solid Height (Sh) Approx		Load (P) at L_1		Spring Rate (R)		Catalog #	Load Length (L_1)		Load (P) at L_1		Spring Rate (R)	
	in	mm	in	mm	in	mm	in	mm	in	mm	lb	N	lb/in	N/mm		in	mm	lb	N	lb/in	N/mm
D10500*	0.108	2.75	0.010	0.25	0.193	4.90	0.075	1.90	0.064	1.63	0.52	2.31	4.40	0.77	D20500*	0.075	1.90	0.43	1.93	3.66	0.64
D10510*	0.108	2.75	0.010	0.25	0.287	7.30	0.102	2.60	0.084	2.13	0.52	2.31	2.80	0.49	D20510*	0.102	2.60	0.43	1.93	2.34	0.41
D10520*	0.108	2.75	0.010	0.25	0.429	10.90	0.142	3.60	0.113	2.88	0.52	2.31	1.77	0.31	D20520*	0.142	3.60	0.43	1.93	1.49	0.26
D10530*	0.108	2.75	0.010	0.25	0.618	15.70	0.197	5.00	0.153	3.88	0.52	2.31	1.26	0.22	D20530*	0.197	5.00	0.43	1.93	1.03	0.18
D10540*	0.108	2.75	0.010	0.25	0.902	22.90	0.276	7.00	0.212	5.38	0.52	2.31	0.80	0.14	D20540*	0.276	7.00	0.43	1.93	0.69	0.12
D10700*	0.111	2.82	0.013	0.32	0.185	4.70	0.094	2.40	0.082	2.08	1.05	4.69	11.77	2.06	D20700*	0.094	2.40	0.88	3.91	9.83	1.72
D10710*	0.111	2.82	0.013	0.32	0.268	6.80	0.126	3.20	0.107	2.72	1.05	4.69	7.49	1.31	D20710*	0.126	3.20	0.88	3.91	6.23	1.09
D10720*	0.111	2.82	0.013	0.32	0.394	10.00	0.173	4.40	0.145	3.68	1.05	4.69	4.86	0.85	D20720*	0.173	4.40	0.88	3.91	4.06	0.71
D10730*	0.111	2.82	0.013	0.32	0.559	14.20	0.240	6.10	0.195	4.96	1.05	4.69	3.31	0.58	D20730*	0.240	6.10	0.88	3.91	2.74	0.48
D10740*	0.111	2.82	0.013	0.32	0.811	20.60	0.335	8.50	0.271	6.88	1.05	4.69	2.17	0.38	D20740*	0.335	8.50	0.88	3.91	1.83	0.32
D10900*	0.114	2.90	0.016	0.40	0.169	4.30	0.110	2.80	0.102	2.60	1.61	7.16	27.26	4.77	D20900*	0.110	2.80	1.34	5.96	22.69	3.97
D10910*	0.114	2.90	0.016	0.40	0.248	6.30	0.154	3.90	0.134	3.40	1.61	7.16	17.37	3.04	D20910*	0.154	3.90	1.34	5.96	14.46	2.53
D10920*	0.114	2.90	0.016	0.40	0.358	9.10	0.213	5.40	0.181	4.60	1.61	7.16	11.20	1.96	D20920*	0.213	5.40	1.34	5.96	9.31	1.63
D10930*	0.114	2.90	0.016	0.40	0.512	13.00	0.295	7.50	0.244	6.20	1.61	7.16	7.60	1.33	D20930*	0.295	7.50	1.34	5.96	6.34	1.11
D10940*	0.114	2.90	0.016	0.40	0.728	18.50	0.417	10.60	0.339	8.60	1.61	7.16	5.14	0.90	D20940*	0.417	10.60	1.34	5.96	4.29	0.75
C0118-016-0250-M*	**0.118**	**3.00**	**0.016**	**0.41**	**0.250**	**6.35**	**0.148**	**3.76**	**0.136**	**3.46**	**1.77**	**7.89**	**17.36**	**3.04**	**C0118-016-0250-S***	**0.159**	**4.05**	**1.37**	**6.08**	**15.09**	**2.64**
C0118-016-0313-M*	**0.118**	**3.00**	**0.016**	**0.41**	**0.313**	**7.94**	**0.179**	**4.54**	**0.163**	**4.14**	**1.77**	**7.89**	**13.26**	**2.32**	**C0118-016-0313-S***	**0.194**	**4.92**	**1.37**	**6.08**	**11.53**	**2.02**
C0118-016-0375-M*	**0.118**	**3.00**	**0.016**	**0.41**	**0.375**	**9.53**	**0.210**	**5.33**	**0.189**	**4.81**	**1.77**	**7.89**	**10.72**	**1.88**	**C0118-016-0375-S***	**0.228**	**5.80**	**1.37**	**6.08**	**9.32**	**1.63**
C0118-016-0438-M*	**0.118**	**3.00**	**0.016**	**0.41**	**0.438**	**11.11**	**0.241**	**6.11**	**0.216**	**5.49**	**1.77**	**7.89**	**9.00**	**1.58**	**C0118-016-0438-S***	**0.263**	**6.68**	**1.37**	**6.08**	**7.83**	**1.37**
C0118-016-0500-M*	**0.118**	**3.00**	**0.016**	**0.41**	**0.500**	**12.70**	**0.271**	**6.89**	**0.243**	**6.16**	**1.77**	**7.89**	**7.76**	**1.36**	**C0118-016-0500-S***	**0.297**	**7.55**	**1.37**	**6.08**	**6.75**	**1.18**
C0118-016-0563-M*	**0.118**	**3.00**	**0.016**	**0.41**	**0.563**	**14.29**	**0.302**	**7.68**	**0.269**	**6.84**	**1.77**	**7.89**	**6.82**	**1.19**	**C0118-016-0563-S***	**0.332**	**8.43**	**1.37**	**6.08**	**5.93**	**1.04**
C0118-016-0625-M*	**0.118**	**3.00**	**0.016**	**0.41**	**0.625**	**15.88**	**0.333**	**8.46**	**0.296**	**7.51**	**1.77**	**7.89**	**6.08**	**1.06**	**C0118-016-0625-S***	**0.366**	**9.30**	**1.37**	**6.08**	**5.28**	**0.92**
C0118-016-0688-M*	**0.118**	**3.00**	**0.016**	**0.41**	**0.688**	**17.46**	**0.364**	**9.25**	**0.322**	**8.19**	**1.77**	**7.89**	**5.48**	**0.96**	**C0118-016-0688-S***	**0.401**	**10.18**	**1.37**	**6.08**	**4.77**	**0.83**
C0118-016-0750-M*	**0.118**	**3.00**	**0.016**	**0.41**	**0.750**	**19.05**	**0.395**	**10.03**	**0.349**	**8.86**	**1.77**	**7.89**	**5.00**	**0.87**	**C0118-016-0750-S***	**0.435**	**11.05**	**1.37**	**6.08**	**4.34**	**0.76**
C0118-016-0813-M*	**0.118**	**3.00**	**0.016**	**0.41**	**0.813**	**20.64**	**0.426**	**10.82**	**0.376**	**9.54**	**1.77**	**7.89**	**4.59**	**0.80**	**C0118-016-0813-S***	**0.470**	**11.93**	**1.37**	**6.08**	**3.99**	**0.70**
C0118-016-0875-M*	**0.118**	**3.00**	**0.016**	**0.41**	**0.875**	**22.23**	**0.457**	**11.60**	**0.402**	**10.21**	**1.77**	**7.89**	**4.24**	**0.74**	**C0118-016-0875-S***	**0.504**	**12.80**	**1.37**	**6.08**	**3.69**	**0.65**
C0118-016-0938-M*	**0.118**	**3.00**	**0.016**	**0.41**	**0.938**	**23.81**	**0.488**	**12.39**	**0.429**	**10.89**	**1.77**	**7.89**	**3.94**	**0.69**	**C0118-016-0938-S***	**0.539**	**13.68**	**1.37**	**6.08**	**3.43**	**0.60**
C0118-016-1000-M*	**0.118**	**3.00**	**0.016**	**0.41**	**1.000**	**25.40**	**0.519**	**13.17**	**0.455**	**11.57**	**1.77**	**7.89**	**3.68**	**0.64**	**C0118-016-1000-S***	**0.573**	**14.56**	**1.37**	**6.08**	**3.20**	**0.56**
C0118-016-1125-M*	**0.118**	**3.00**	**0.016**	**0.41**	**1.125**	**28.58**	**0.580**	**14.74**	**0.509**	**12.92**	**1.77**	**7.89**	**3.26**	**0.57**	**C0118-016-1125-S***	**0.642**	**16.31**	**1.37**	**6.08**	**2.83**	**0.50**
C0118-016-1250-M*	**0.118**	**3.00**	**0.016**	**0.41**	**1.250**	**31.75**	**0.642**	**16.31**	**0.562**	**14.27**	**1.77**	**7.89**	**2.92**	**0.51**	**C0118-016-1250-S***	**0.711**	**18.06**	**1.37**	**6.08**	**2.54**	**0.44**
C0118-016-1375-M*	**0.118**	**3.00**	**0.016**	**0.41**	**1.375**	**34.93**	**0.704**	**17.88**	**0.615**	**15.62**	**1.77**	**7.89**	**2.64**	**0.46**	**C0118-016-1375-S***	**0.780**	**19.81**	**1.37**	**6.08**	**2.30**	**0.40**
C0118-016-1500-M*	**0.118**	**3.00**	**0.016**	**0.41**	**1.500**	**38.10**	**0.766**	**19.45**	**0.668**	**16.97**	**1.77**	**7.89**	**2.42**	**0.42**	**C0118-016-1500-S***	**0.849**	**21.56**	**1.37**	**6.08**	**2.10**	**0.37**
C0118-016-1625-M*	**0.118**	**3.00**	**0.016**	**0.41**	**1.625**	**41.28**	**0.828**	**21.02**	**0.721**	**18.32**	**1.77**	**7.89**	**2.22**	**0.39**	**C0118-016-1625-S***	**0.918**	**23.31**	**1.37**	**6.08**	**1.93**	**0.34**
C0118-016-1750-M*	**0.118**	**3.00**	**0.016**	**0.41**	**1.750**	**44.45**	**0.889**	**22.59**	**0.774**	**19.67**	**1.77**	**7.89**	**2.06**	**0.36**	**C0118-016-1750-S***	**0.987**	**25.06**	**1.37**	**6.08**	**1.79**	**0.31**
C0118-016-1875-M*	**0.118**	**3.00**	**0.016**	**0.41**	**1.875**	**47.63**	**0.951**	**24.16**	**0.828**	**21.02**	**1.77**	**7.89**	**1.92**	**0.34**	**C0118-016-1875-S***	**1.056**	**26.81**	**1.37**	**6.08**	**1.67**	**0.29**
C0118-016-2000-M*	**0.118**	**3.00**	**0.016**	**0.41**	**2.000**	**50.80**	**1.013**	**25.73**	**0.881**	**22.37**	**1.77**	**7.89**	**1.80**	**0.31**	**C0118-016-2000-S***	**1.125**	**28.56**	**1.37**	**6.08**	**1.56**	**0.27**
C0118-018-0250-M*	**0.118**	**3.00**	**0.018**	**0.46**	**0.250**	**6.35**	**0.164**	**4.17**	**0.156**	**3.97**	**2.45**	**10.92**	**28.59**	**5.00**	**C0118-018-0250-S***	**0.173**	**4.40**	**1.90**	**8.47**	**24.86**	**4.35**
C0118-018-0313-M*	**0.118**	**3.00**	**0.018**	**0.46**	**0.313**	**7.94**	**0.199**	**5.06**	**0.188**	**4.78**	**2.45**	**10.92**	**21.68**	**3.79**	**C0118-018-0313-S***	**0.212**	**5.37**	**1.90**	**8.47**	**18.85**	**3.30**
C0118-018-0375-M*	**0.118**	**3.00**	**0.018**	**0.46**	**0.375**	**9.53**	**0.234**	**5.95**	**0.220**	**5.59**	**2.45**	**10.92**	**17.46**	**3.06**	**C0118-018-0375-S***	**0.250**	**6.34**	**1.90**	**8.47**	**15.18**	**2.66**
C0118-018-0438-M*	**0.118**	**3.00**	**0.018**	**0.46**	**0.438**	**11.11**	**0.270**	**6.85**	**0.252**	**6.40**	**2.45**	**10.92**	**14.61**	**2.56**	**C0118-018-0438-S***	**0.288**	**7.31**	**1.90**	**8.47**	**12.71**	**2.22**
C0118-018-0500-M*	**0.118**	**3.00**	**0.018**	**0.46**	**0.500**	**12.70**	**0.305**	**7.74**	**0.284**	**7.21**	**2.45**	**10.92**	**12.57**	**2.20**	**C0118-018-0500-S***	**0.326**	**8.27**	**1.90**	**8.47**	**10.93**	**1.91**
C0118-018-0563-M*	**0.118**	**3.00**	**0.018**	**0.46**	**0.563**	**14.29**	**0.340**	**8.63**	**0.315**	**8.01**	**2.45**	**10.92**	**11.02**	**1.93**	**C0118-018-0563-S***	**0.364**	**9.24**	**1.90**	**8.47**	**9.58**	**1.68**
C0118-018-0625-M*	**0.118**	**3.00**	**0.018**	**0.46**	**0.625**	**15.88**	**0.375**	**9.52**	**0.347**	**8.82**	**2.45**	**10.92**	**9.82**	**1.72**	**C0118-018-0625-S***	**0.402**	**10.21**	**1.90**	**8.47**	**8.53**	**1.49**
C0118-018-0688-M*	**0.118**	**3.00**	**0.018**	**0.46**	**0.688**	**17.46**	**0.410**	**10.41**	**0.379**	**9.63**	**2.45**	**10.92**	**8.85**	**1.55**	**C0118-018-0688-S***	**0.440**	**11.18**	**1.90**	**8.47**	**7.69**	**1.35**
C0118-018-0750-M*	**0.118**	**3.00**	**0.018**	**0.46**	**0.750**	**19.05**	**0.445**	**11.31**	**0.411**	**10.44**	**2.45**	**10.92**	**8.05**	**1.41**	**C0118-018-0750-S***	**0.478**	**12.14**	**1.90**	**8.47**	**7.00**	**1.23**
C0118-018-0813-M*	**0.118**	**3.00**	**0.018**	**0.46**	**0.813**	**20.64**	**0.480**	**12.20**	**0.443**	**11.24**	**2.45**	**10.92**	**7.39**	**1.29**	**C0118-018-0813-S***	**0.516**	**13.11**	**1.90**	**8.47**	**6.43**	**1.13**
C0118-018-0875-M*	**0.118**	**3.00**	**0.018**	**0.46**	**0.875**	**22.23**	**0.515**	**13.09**	**0.475**	**12.05**	**2.45**	**10.92**	**6.83**	**1.19**	**C0118-018-0875-S***	**0.554**	**14.08**	**1.90**	**8.47**	**5.94**	**1.04**
C0118-018-0938-M*	**0.118**	**3.00**	**0.018**	**0.46**	**0.938**	**23.81**	**0.550**	**13.98**	**0.506**	**12.86**	**2.45**	**10.92**	**6.34**	**1.11**	**C0118-018-0938-S***	**0.592**	**15.04**	**1.90**	**8.47**	**5.52**	**0.97**
C0118-018-1000-M*	**0.118**	**3.00**	**0.018**	**0.46**	**1.000**	**25.40**	**0.586**	**14.87**	**0.538**	**13.67**	**2.45**	**10.92**	**5.92**	**1.04**	**C0118-018-1000-S***	**0.630**	**16.01**	**1.90**	**8.47**	**5.15**	**0.90**
C0118-018-1125-M*	**0.118**	**3.00**	**0.018**	**0.46**	**1.125**	**28.58**	**0.656**	**16.66**	**0.602**	**15.28**	**2.45**	**10.92**	**5.23**	**0.92**	**C0118-018-1125-S***	**0.707**	**17.95**	**1.90**	**8.47**	**4.55**	**0.80**
C0118-018-1250-M*	**0.118**	**3.00**	**0.018**	**0.46**	**1.250**	**31.75**	**0.726**	**18.44**	**0.665**	**16.90**	**2.45**	**10.92**	**4.69**	**0.82**	**C0118-018-1250-S***	**0.783**	**19.88**	**1.90**	**8.47**	**4.07**	**0.71**
C0118-018-1375-M*	**0.118**	**3.00**	**0.018**	**0.46**	**1.375**	**34.93**	**0.796**	**20.23**	**0.729**	**18.52**	**2.45**	**10.92**	**4.24**	**0.74**	**C0118-018-1375-S***	**0.859**	**21.82**	**1.90**	**8.47**	**3.69**	**0.65**
C0118-018-1500-M*	**0.118**	**3.00**	**0.018**	**0.46**	**1.500**	**38.10**	**0.867**	**22.01**	**0.793**	**20.13**	**2.45**	**10.92**	**3.88**	**0.68**	**C0118-018-1500-S***	**0.935**	**23.75**	**1.90**	**8.47**	**3.37**	**0.59**
C0118-018-1625-M*	**0.118**	**3.00**	**0.018**	**0.46**	**1.625**	**41.28**	**0.937**	**23.80**	**0.856**	**21.75**	**2.45**	**10.92**	**3.57**	**0.62**	**C0118-018-1625-S***	**1.011**	**25.68**	**1.90**	**8.47**	**3.10**	**0.54**
C0118-018-1750-M*	**0.118**	**3.00**	**0.018**	**0.46**	**1.750**	**44.45**	**1.007**	**25.58**	**0.920**	**23.36**	**2.45**	**10.92**	**3.30**	**0.58**	**C0118-018-1750-S***	**1.087**	**27.62**	**1.90**	**8.47**	**2.87**	**0.50**
C0118-018-1875-M*	**0.118**	**3.00**	**0.018**	**0.46**	**1.875**	**47.63**	**1.077**	**27.36**	**0.983**	**24.98**	**2.45**	**10.92**	**3.08**	**0.54**	**C0118-018-1875-S***	**1.164**	**29.55**	**1.90**	**8.47**	**2.68**	**0.47**
C0118-018-2000-M*	**0.118**	**3.00**	**0.018**	**0.46**	**2.000**	**50.80**	**1.148**	**29.15**	**1.047**	**26.59**	**2.45**	**10.92**	**2.88**	**0.50**	**C0118-018-2000-S***	**1.240**	**31.49**	**1.90**	**8.47**	**2.50**	**0.44**
C0118-020-0188-M*	**0.118**	**3.00**	**0.020**	**0.51**	**0.188**	**4.76**	**0.139**	**3.53**	**0.137**	**3.48**	**3.33**	**14.82**	**68.56**	**12.00**	**C0118-020-0188-S***	**0.145**	**3.67**	**2.55**	**11.36**	**59.62**	**10.43**
C0118-020-0250-M*	**0.118**	**3.00**	**0.020**	**0.51**	**0.250**	**6.35**	**0.179**	**4.54**	**0.175**	**4.43**	**3.28**	**14.57**	**46.01**	**8.05**	**C0118-020-0250-S***	**0.186**	**4.73**	**2.55**	**11.36**	**40.01**	**7.00**
C0118-020-0313-M*	**0.118**	**3.00**	**0.020**	**0.51**	**0.313**	**7.94**	**0.218**	**5.53**	**0.211**	**5.37**	**3.28**	**14.57**	**34.62**	**6.06**	**C0118-020-0313-S***	**0.228**	**5.78**	**2.55**	**11.36**	**30.10**	**5.27**
C0118-020-0375-M*	**0.118**	**3.00**	**0.020**	**0.51**	**0.375**	**9.53**	**0.257**	**6.53**	**0.248**	**6.30**	**3.28**	**14.57**	**27.75**	**4.86**	**C0118-020-0375-S***	**0.269**	**6.84**	**2.55**	**11.36**	**24.13**	**4.22**
C0118-020-0438-M*	**0.118**	**3.00**	**0.020**	**0.51**	**0.438**	**11.11**	**0.296**	**7.52**	**0.285**	**7.23**	**3.28**	**14.57**	**23.16**	**4.05**	**C0118-020-0438-S***	**0.311**	**7.89**	**2.55**	**11.36**	**20.14**	**3.52**
C0118-020-0500-M*	**0.118**	**3.00**	**0.020**	**0.51**	**0.500**	**12.70**	**0.335**	**8.51**	**0.321**	**8.16**	**3.28**	**14.57**	**19.87**	**3.48**	**C0118-020-0500-S***	**0.352**	**8.95**	**2.55**	**11.36**	**17.28**	**3.02**
C0118-020-0563-M*	**0.118**	**3.00**	**0.020**	**0.51**	**0.563**	**14.29**	**0.374**	**9.50**	**0.358**	**9.09**	**3.28**	**14.57**	**17.40**	**3.04**	**C0118-020-0563-S***	**0.394**	**10.00**	**2.55**	**11.36**	**15.13**	**2.65**

Part Numbers with an "*" are squared and not ground. **Part Numbers in bold** represent the newly expanded Associated Spring RAYMOND compression spring offering.

MUSIC WIRE

Catalog #	Outside Diameter (OD)		Wire Diameter (d)		Free Length (L) Approx		Load Length (L_1)		Solid Height (Sh) Approx		Load (P) at L_1		Spring Rate (R)	
	in	mm	in	mm	in	mm	in	mm	in	mm	lb	N	lb/in	N/mm
C0118-020-0625-M*	**0.118**	**3.00**	**0.020**	**0.51**	**0.625**	**15.88**	**0.413**	**10.50**	**0.395**	**10.03**	**3.28**	**14.57**	**15.47**	**2.71**
C0118-020-0688-M*	**0.118**	**3.00**	**0.020**	**0.51**	**0.688**	**17.46**	**0.452**	**11.49**	**0.431**	**10.96**	**3.28**	**14.57**	**13.93**	**2.44**
C0118-020-0750-M*	**0.118**	**3.00**	**0.020**	**0.51**	**0.750**	**19.05**	**0.491**	**12.48**	**0.468**	**11.89**	**3.28**	**14.57**	**12.67**	**2.22**
C0118-020-0813-M*	**0.118**	**3.00**	**0.020**	**0.51**	**0.813**	**20.64**	**0.530**	**13.47**	**0.505**	**12.82**	**3.28**	**14.57**	**11.62**	**2.03**
C0118-020-0875-M*	**0.118**	**3.00**	**0.020**	**0.51**	**0.875**	**22.23**	**0.570**	**14.47**	**0.541**	**13.75**	**3.28**	**14.57**	**10.73**	**1.88**
C0118-020-0938-M*	**0.118**	**3.00**	**0.020**	**0.51**	**0.938**	**23.81**	**0.609**	**15.46**	**0.578**	**14.69**	**3.28**	**14.57**	**9.96**	**1.74**
C0118-020-1000-M*	**0.118**	**3.00**	**0.020**	**0.51**	**1.000**	**25.40**	**0.648**	**16.45**	**0.615**	**15.62**	**3.28**	**14.57**	**9.30**	**1.63**
C0118-020-1125-M*	**0.118**	**3.00**	**0.020**	**0.51**	**1.125**	**28.58**	**0.726**	**18.44**	**0.688**	**17.48**	**3.28**	**14.57**	**8.21**	**1.44**
C0118-020-1250-M*	**0.118**	**3.00**	**0.020**	**0.51**	**1.250**	**31.75**	**0.804**	**20.42**	**0.762**	**19.35**	**3.28**	**14.57**	**7.35**	**1.29**
C0118-020-1375-M*	**0.118**	**3.00**	**0.020**	**0.51**	**1.375**	**34.93**	**0.882**	**22.41**	**0.835**	**21.21**	**3.28**	**14.57**	**6.65**	**1.16**
C0118-020-1500-M*	**0.118**	**3.00**	**0.020**	**0.51**	**1.500**	**38.10**	**0.960**	**24.39**	**0.908**	**23.07**	**3.28**	**14.57**	**6.07**	**1.06**
C0118-020-1625-M*	**0.118**	**3.00**	**0.020**	**0.51**	**1.625**	**41.28**	**1.039**	**26.38**	**0.982**	**24.94**	**3.28**	**14.57**	**5.59**	**0.98**
C0118-020-1750-M*	**0.118**	**3.00**	**0.020**	**0.51**	**1.750**	**44.45**	**1.117**	**28.36**	**1.055**	**26.80**	**3.28**	**14.57**	**5.17**	**0.91**
C0118-020-1875-M*	**0.118**	**3.00**	**0.020**	**0.51**	**1.875**	**47.63**	**1.195**	**30.35**	**1.129**	**28.66**	**3.28**	**14.57**	**4.82**	**0.84**
C0118-021-0188-M	**0.118**	**3.00**	**0.021**	**0.53**	**0.188**	**4.76**	**0.137**	**3.49**	**0.135**	**3.42**	**3.74**	**16.64**	**74.45**	**13.03**
C0118-021-0250-M	**0.118**	**3.00**	**0.021**	**0.53**	**0.250**	**6.35**	**0.178**	**4.53**	**0.174**	**4.41**	**3.74**	**16.64**	**52.08**	**9.11**
C0118-021-0313-M	**0.118**	**3.00**	**0.021**	**0.53**	**0.313**	**7.94**	**0.219**	**5.57**	**0.213**	**5.40**	**3.74**	**16.64**	**40.05**	**7.01**
C0118-021-0375-M	**0.118**	**3.00**	**0.021**	**0.53**	**0.375**	**9.53**	**0.260**	**6.60**	**0.252**	**6.39**	**3.74**	**16.64**	**32.53**	**5.69**
C0118-021-0438-M	**0.118**	**3.00**	**0.021**	**0.53**	**0.438**	**11.11**	**0.301**	**7.64**	**0.291**	**7.38**	**3.74**	**16.64**	**27.39**	**4.79**
C0118-021-0500-M	**0.118**	**3.00**	**0.021**	**0.53**	**0.500**	**12.70**	**0.342**	**8.68**	**0.330**	**8.37**	**3.74**	**16.64**	**23.65**	**4.14**
C0118-021-0563-M	**0.118**	**3.00**	**0.021**	**0.53**	**0.563**	**14.29**	**0.383**	**9.72**	**0.369**	**9.36**	**3.74**	**16.64**	**20.81**	**3.64**
C0118-021-0625-M	**0.118**	**3.00**	**0.021**	**0.53**	**0.625**	**15.88**	**0.424**	**10.76**	**0.408**	**10.35**	**3.74**	**16.64**	**18.58**	**3.25**
C0118-021-0688-M	**0.118**	**3.00**	**0.021**	**0.53**	**0.688**	**17.46**	**0.465**	**11.80**	**0.447**	**11.34**	**3.74**	**16.64**	**16.78**	**2.94**
C0118-021-0750-M	**0.118**	**3.00**	**0.021**	**0.53**	**0.750**	**19.05**	**0.506**	**12.84**	**0.486**	**12.33**	**3.74**	**16.64**	**15.30**	**2.68**
C0118-021-0813-M	**0.118**	**3.00**	**0.021**	**0.53**	**0.813**	**20.64**	**0.546**	**13.88**	**0.525**	**13.32**	**3.74**	**16.64**	**14.06**	**2.46**
C0118-021-0875-M	**0.118**	**3.00**	**0.021**	**0.53**	**0.875**	**22.23**	**0.587**	**14.92**	**0.563**	**14.31**	**3.74**	**16.64**	**13.01**	**2.28**
C0118-021-0938-M	**0.118**	**3.00**	**0.021**	**0.53**	**0.938**	**23.81**	**0.628**	**15.96**	**0.602**	**15.30**	**3.74**	**16.64**	**12.10**	**2.12**
C0118-021-1000-M	**0.118**	**3.00**	**0.021**	**0.53**	**1.000**	**25.40**	**0.669**	**17.00**	**0.641**	**16.29**	**3.74**	**16.64**	**11.31**	**1.98**
C0118-021-1125-M	**0.118**	**3.00**	**0.021**	**0.53**	**1.125**	**28.58**	**0.751**	**19.08**	**0.719**	**18.27**	**3.74**	**16.64**	**10.00**	**1.75**
C0118-021-1250-M	**0.118**	**3.00**	**0.021**	**0.53**	**1.250**	**31.75**	**0.833**	**21.16**	**0.797**	**20.25**	**3.74**	**16.64**	**8.97**	**1.57**
C0118-021-1375-M	**0.118**	**3.00**	**0.021**	**0.53**	**1.375**	**34.93**	**0.915**	**23.23**	**0.875**	**22.23**	**3.74**	**16.64**	**8.13**	**1.42**
C0118-021-1500-M	**0.118**	**3.00**	**0.021**	**0.53**	**1.500**	**38.10**	**0.997**	**25.31**	**0.953**	**24.21**	**3.74**	**16.64**	**7.43**	**1.30**
C0118-021-1625-M	**0.118**	**3.00**	**0.021**	**0.53**	**1.625**	**41.28**	**1.078**	**27.39**	**1.031**	**26.19**	**3.74**	**16.64**	**6.84**	**1.20**
C0118-021-1750-M	**0.118**	**3.00**	**0.021**	**0.53**	**1.750**	**44.45**	**1.160**	**29.47**	**1.109**	**28.17**	**3.74**	**16.64**	**6.34**	**1.11**
C0118-021-1875-M	**0.118**	**3.00**	**0.021**	**0.53**	**1.875**	**47.63**	**1.242**	**31.55**	**1.187**	**30.15**	**3.74**	**16.64**	**5.91**	**1.03**
C0118-022-0188-M	**0.118**	**3.00**	**0.022**	**0.56**	**0.188**	**4.76**	**0.142**	**3.61**	**0.141**	**3.57**	**4.24**	**18.87**	**93.12**	**16.30**
C0118-022-0250-M	**0.118**	**3.00**	**0.022**	**0.56**	**0.250**	**6.35**	**0.185**	**4.69**	**0.182**	**4.62**	**4.24**	**18.87**	**64.87**	**11.35**
C0118-022-0313-M	**0.118**	**3.00**	**0.022**	**0.56**	**0.313**	**7.94**	**0.227**	**5.77**	**0.223**	**5.66**	**4.24**	**18.87**	**49.77**	**8.71**
C0118-022-0375-M	**0.118**	**3.00**	**0.022**	**0.56**	**0.375**	**9.53**	**0.270**	**6.86**	**0.264**	**6.71**	**4.24**	**18.87**	**40.37**	**7.07**
C0118-022-0438-M	**0.118**	**3.00**	**0.022**	**0.56**	**0.438**	**11.11**	**0.313**	**7.94**	**0.305**	**7.75**	**4.24**	**18.87**	**33.96**	**5.94**
C0118-022-0500-M	**0.118**	**3.00**	**0.022**	**0.56**	**0.500**	**12.70**	**0.355**	**9.02**	**0.346**	**8.79**	**4.24**	**18.87**	**29.31**	**5.13**
C0118-022-0563-M	**0.118**	**3.00**	**0.022**	**0.56**	**0.563**	**14.29**	**0.398**	**10.11**	**0.387**	**9.84**	**4.24**	**18.87**	**25.77**	**4.51**
C0118-022-0625-M	**0.118**	**3.00**	**0.022**	**0.56**	**0.625**	**15.88**	**0.441**	**11.19**	**0.428**	**10.88**	**4.24**	**18.87**	**23.00**	**4.03**
C0118-022-0688-M	**0.118**	**3.00**	**0.022**	**0.56**	**0.688**	**17.46**	**0.483**	**12.27**	**0.470**	**11.93**	**4.24**	**18.87**	**20.77**	**3.63**
C0118-022-0750-M	**0.118**	**3.00**	**0.022**	**0.56**	**0.750**	**19.05**	**0.526**	**13.36**	**0.511**	**12.97**	**4.24**	**18.87**	**18.93**	**3.31**
C0118-022-0813-M	**0.118**	**3.00**	**0.022**	**0.56**	**0.813**	**20.64**	**0.569**	**14.44**	**0.552**	**14.02**	**4.24**	**18.87**	**17.39**	**3.04**
C0118-022-0875-M	**0.118**	**3.00**	**0.022**	**0.56**	**0.875**	**22.23**	**0.611**	**15.53**	**0.593**	**15.06**	**4.24**	**18.87**	**16.08**	**2.81**
C0118-022-0938-M	**0.118**	**3.00**	**0.022**	**0.56**	**0.938**	**23.81**	**0.654**	**16.61**	**0.634**	**16.11**	**4.24**	**18.87**	**14.96**	**2.62**
C0118-022-1000-M	**0.118**	**3.00**	**0.022**	**0.56**	**1.000**	**25.40**	**0.697**	**17.69**	**0.675**	**17.15**	**4.24**	**18.87**	**13.98**	**2.45**
C0118-022-1125-M	**0.118**	**3.00**	**0.022**	**0.56**	**1.125**	**28.58**	**0.782**	**19.86**	**0.757**	**19.24**	**4.24**	**18.87**	**12.36**	**2.16**
C0118-022-1250-M	**0.118**	**3.00**	**0.022**	**0.56**	**1.250**	**31.75**	**0.867**	**22.03**	**0.840**	**21.33**	**4.24**	**18.87**	**11.08**	**1.94**
C0118-022-1375-M	**0.118**	**3.00**	**0.022**	**0.56**	**1.375**	**34.93**	**0.953**	**24.20**	**0.922**	**23.42**	**4.24**	**18.87**	**10.04**	**1.76**
C0118-022-1500-M	**0.118**	**3.00**	**0.022**	**0.56**	**1.500**	**38.10**	**1.038**	**26.36**	**1.004**	**25.51**	**4.24**	**18.87**	**9.18**	**1.61**
C0118-022-1625-M	**0.118**	**3.00**	**0.022**	**0.56**	**1.625**	**41.28**	**1.123**	**28.53**	**1.086**	**27.59**	**4.24**	**18.87**	**8.45**	**1.48**
C0118-022-1750-M	**0.118**	**3.00**	**0.022**	**0.56**	**1.750**	**44.45**	**1.209**	**30.70**	**1.169**	**29.68**	**4.24**	**18.87**	**7.83**	**1.37**
C0118-022-1875-M	**0.118**	**3.00**	**0.022**	**0.56**	**1.875**	**47.63**	**1.294**	**32.86**	**1.251**	**31.77**	**4.24**	**18.87**	**7.30**	**1.28**
C0118-023-0188-M	**0.118**	**3.00**	**0.023**	**0.58**	**0.188**	**4.76**	**0.146**	**3.72**	**0.146**	**3.71**	**4.78**	**21.26**	**116.00**	**20.30**
C0118-023-0250-M	**0.118**	**3.00**	**0.023**	**0.58**	**0.250**	**6.35**	**0.191**	**4.84**	**0.189**	**4.80**	**4.78**	**21.26**	**80.46**	**14.08**
C0118-023-0313-M	**0.118**	**3.00**	**0.023**	**0.58**	**0.313**	**7.94**	**0.235**	**5.97**	**0.232**	**5.90**	**4.78**	**21.26**	**61.59**	**10.78**
C0118-023-0375-M	**0.118**	**3.00**	**0.023**	**0.58**	**0.375**	**9.53**	**0.279**	**7.09**	**0.275**	**7.00**	**4.78**	**21.26**	**49.89**	**8.73**
C0118-023-0438-M	**0.118**	**3.00**	**0.023**	**0.58**	**0.438**	**11.11**	**0.324**	**8.22**	**0.319**	**8.09**	**4.78**	**21.26**	**41.93**	**7.34**
C0118-023-0500-M	**0.118**	**3.00**	**0.023**	**0.58**	**0.500**	**12.70**	**0.368**	**9.34**	**0.362**	**9.19**	**4.78**	**21.26**	**36.15**	**6.33**
C0118-023-0563-M	**0.118**	**3.00**	**0.023**	**0.58**	**0.563**	**14.29**	**0.412**	**10.47**	**0.405**	**10.28**	**4.78**	**21.26**	**31.78**	**5.56**
C0118-023-0625-M	**0.118**	**3.00**	**0.023**	**0.58**	**0.625**	**15.88**	**0.456**	**11.59**	**0.448**	**11.38**	**4.78**	**21.26**	**28.35**	**4.96**

STAINLESS STEEL

Catalog #	Load Length (L_1)		Load (P) at L_1		Spring Rate (R)	
	in	mm	lb	N	lb/in	N/mm
C0118-020-0625-S*	**0.435**	**11.06**	**2.55**	**11.36**	**13.45**	**2.35**
C0118-020-0688-S*	**0.477**	**12.11**	**2.55**	**11.36**	**12.11**	**2.12**
C0118-020-0750-S*	**0.518**	**13.16**	**2.55**	**11.36**	**11.02**	**1.93**
C0118-020-0813-S*	**0.560**	**14.22**	**2.55**	**11.36**	**10.10**	**1.77**
C0118-020-0875-S*	**0.601**	**15.27**	**2.55**	**11.36**	**9.33**	**1.63**
C0118-020-0938-S*	**0.643**	**16.33**	**2.55**	**11.36**	**8.66**	**1.52**
C0118-020-1000-S*	**0.684**	**17.38**	**2.55**	**11.36**	**8.09**	**1.42**
C0118-020-1125-S*	**0.767**	**19.49**	**2.55**	**11.36**	**7.14**	**1.25**
C0118-020-1250-S*	**0.850**	**21.60**	**2.55**	**11.36**	**6.39**	**1.12**
C0118-020-1375-S*	**0.933**	**23.71**	**2.55**	**11.36**	**5.78**	**1.01**
C0118-020-1500-S*	**1.016**	**25.82**	**2.55**	**11.36**	**5.28**	**0.92**
C0118-020-1625-S*	**1.099**	**27.93**	**2.55**	**11.36**	**4.86**	**0.85**
C0118-020-1750-S*	**1.182**	**30.03**	**2.55**	**11.36**	**4.50**	**0.79**
C0118-020-1875-S*	**1.265**	**32.14**	**2.55**	**11.36**	**4.19**	**0.73**
C0118-021-0188-S	**0.142**	**3.62**	**2.92**	**12.99**	**64.74**	**11.33**
C0118-021-0250-S	**0.186**	**4.71**	**2.92**	**12.99**	**45.29**	**7.93**
C0118-021-0313-S	**0.229**	**5.81**	**2.92**	**12.99**	**34.82**	**6.09**
C0118-021-0375-S	**0.272**	**6.90**	**2.92**	**12.99**	**28.29**	**4.95**
C0118-021-0438-S	**0.315**	**8.00**	**2.92**	**12.99**	**23.82**	**4.17**
C0118-021-0500-S	**0.358**	**9.09**	**2.92**	**12.99**	**20.57**	**3.60**
C0118-021-0563-S	**0.401**	**10.19**	**2.92**	**12.99**	**18.10**	**3.17**
C0118-021-0625-S	**0.444**	**11.28**	**2.92**	**12.99**	**16.16**	**2.83**
C0118-021-0688-S	**0.487**	**12.38**	**2.92**	**12.99**	**14.59**	**2.55**
C0118-021-0750-S	**0.530**	**13.47**	**2.92**	**12.99**	**13.30**	**2.33**
C0118-021-0813-S	**0.574**	**14.57**	**2.92**	**12.99**	**12.23**	**2.14**
C0118-021-0875-S	**0.617**	**15.66**	**2.92**	**12.99**	**11.31**	**1.98**
C0118-021-0938-S	**0.660**	**16.76**	**2.92**	**12.99**	**10.52**	**1.84**
C0118-021-1000-S	**0.703**	**17.86**	**2.92**	**12.99**	**9.83**	**1.72**
C0118-021-1125-S	**0.789**	**20.05**	**2.92**	**12.99**	**8.70**	**1.52**
C0118-021-1250-S	**0.875**	**22.24**	**2.92**	**12.99**	**7.80**	**1.37**
C0118-021-1375-S	**0.962**	**24.43**	**2.92**	**12.99**	**7.07**	**1.24**
C0118-021-1500-S	**1.048**	**26.62**	**2.92**	**12.99**	**6.46**	**1.13**
C0118-021-1625-S	**1.134**	**28.81**	**2.92**	**12.99**	**5.95**	**1.04**
C0118-021-1750-S	**1.220**	**31.00**	**2.92**	**12.99**	**5.52**	**0.97**
C0118-021-1875-S	**1.307**	**33.19**	**2.92**	**12.99**	**5.14**	**0.90**
C0118-022-0188-S	**0.147**	**3.72**	**3.32**	**14.76**	**80.98**	**14.17**
C0118-022-0250-S	**0.191**	**4.86**	**3.32**	**14.76**	**56.41**	**9.87**
C0118-022-0313-S	**0.236**	**5.99**	**3.32**	**14.76**	**43.28**	**7.57**
C0118-022-0375-S	**0.280**	**7.12**	**3.32**	**14.76**	**35.11**	**6.14**
C0118-022-0438-S	**0.325**	**8.26**	**3.32**	**14.76**	**29.53**	**5.17**
C0118-022-0500-S	**0.370**	**9.39**	**3.32**	**14.76**	**25.48**	**4.46**
C0118-022-0563-S	**0.414**	**10.53**	**3.32**	**14.76**	**22.41**	**3.92**
C0118-022-0625-S	**0.459**	**11.66**	**3.32**	**14.76**	**20.00**	**3.50**
C0118-022-0688-S	**0.504**	**12.80**	**3.32**	**14.76**	**18.06**	**3.16**
C0118-022-0750-S	**0.548**	**13.93**	**3.32**	**14.76**	**16.46**	**2.88**
C0118-022-0813-S	**0.593**	**15.06**	**3.32**	**14.76**	**15.12**	**2.65**
C0118-022-0875-S	**0.638**	**16.20**	**3.32**	**14.76**	**13.98**	**2.45**
C0118-022-0938-S	**0.682**	**17.33**	**3.32**	**14.76**	**13.01**	**2.28**
C0118-022-1000-S	**0.727**	**18.47**	**3.32**	**14.76**	**12.15**	**2.13**
C0118-022-1125-S	**0.816**	**20.73**	**3.32**	**14.76**	**10.75**	**1.88**
C0118-022-1250-S	**0.906**	**23.00**	**3.32**	**14.76**	**9.64**	**1.69**
C0118-022-1375-S	**0.995**	**25.27**	**3.32**	**14.76**	**8.73**	**1.53**
C0118-022-1500-S	**1.084**	**27.54**	**3.32**	**14.76**	**7.98**	**1.40**
C0118-022-1625-S	**1.174**	**29.81**	**3.32**	**14.76**	**7.35**	**1.29**
C0118-022-1750-S	**1.263**	**32.08**	**3.32**	**14.76**	**6.81**	**1.19**
C0118-022-1875-S	**1.352**	**34.34**	**3.32**	**14.76**	**6.35**	**1.11**
C0118-023-0188-S	**0.150**	**3.82**	**3.75**	**16.66**	**100.87**	**17.65**
C0118-023-0250-S	**0.196**	**4.99**	**3.75**	**16.66**	**69.96**	**12.24**
C0118-023-0313-S	**0.243**	**6.16**	**3.75**	**16.66**	**53.56**	**9.37**
C0118-023-0375-S	**0.289**	**7.33**	**3.75**	**16.66**	**43.38**	**7.59**
C0118-023-0438-S	**0.335**	**8.50**	**3.75**	**16.66**	**36.46**	**6.38**
C0118-023-0500-S	**0.381**	**9.67**	**3.75**	**16.66**	**31.44**	**5.50**
C0118-023-0563-S	**0.427**	**10.84**	**3.75**	**16.66**	**27.63**	**4.84**
C0118-023-0625-S	**0.473**	**12.02**	**3.75**	**16.66**	**24.65**	**4.31**

FOR INFORMATION ON ALTERNATIVE FINISHES, SEE PAGE 311

Part Numbers with an "*" are squared and not ground. **Part Numbers in bold** represent the newly expanded Associated Spring RAYMOND compression spring offering.

(OD) 0.118 - 0.120

MUSIC WIRE																STAINLESS STEEL						
Catalog #	Outside Diameter (OD)		Wire Diameter (d)		Free Length (L) Approx		Load Length (L_1)		Solid Height (Sh) Approx		Load (P) at L_1		Spring Rate (R)		Catalog #	Load Length (L_1)		Load (P) at L_1		Spring Rate (R)	
	in	mm	in	mm	in	mm	in	mm	in	mm	lb	N	lb/in	N/mm		in	mm	lb	N	lb/in	N/mm
C0118-023-0688-M	**0.118**	**3.00**	**0.023**	**0.58**	**0.688**	**17.46**	**0.501**	**12.72**	**0.491**	**12.48**	**4.78**	**21.26**	**25.59**	**4.48**	**C0118-023-0688-S**	**0.519**	**13.19**	**3.75**	**16.66**	**22.25**	**3.89**
C0118-023-0750-M	**0.118**	**3.00**	**0.023**	**0.58**	**0.750**	**19.05**	**0.545**	**13.84**	**0.534**	**13.57**	**4.78**	**21.26**	**23.32**	**4.08**	**C0118-023-0750-S**	**0.565**	**14.36**	**3.75**	**16.66**	**20.27**	**3.55**
C0118-023-0813-M	**0.118**	**3.00**	**0.023**	**0.58**	**0.813**	**20.64**	**0.589**	**14.97**	**0.577**	**14.67**	**4.78**	**21.26**	**21.41**	**3.75**	**C0118-023-0813-S**	**0.611**	**15.53**	**3.75**	**16.66**	**18.62**	**3.26**
C0118-023-0875-M	**0.118**	**3.00**	**0.023**	**0.58**	**0.875**	**22.23**	**0.634**	**16.09**	**0.621**	**15.76**	**4.78**	**21.26**	**19.80**	**3.46**	**C0118-023-0875-S**	**0.657**	**16.70**	**3.75**	**16.66**	**17.22**	**3.01**
C0118-023-0938-M	**0.118**	**3.00**	**0.023**	**0.58**	**0.938**	**23.81**	**0.678**	**17.22**	**0.664**	**16.86**	**4.78**	**21.26**	**18.41**	**3.22**	**C0118-023-0938-S**	**0.704**	**17.87**	**3.75**	**16.66**	**16.01**	**2.80**
C0118-023-1000-M	**0.118**	**3.00**	**0.023**	**0.58**	**1.000**	**25.40**	**0.722**	**18.34**	**0.707**	**17.95**	**4.78**	**21.26**	**17.21**	**3.01**	**C0118-023-1000-S**	**0.750**	**19.04**	**3.75**	**16.66**	**14.96**	**2.62**
C0118-023-1125-M	**0.118**	**3.00**	**0.023**	**0.58**	**1.125**	**28.58**	**0.811**	**20.60**	**0.793**	**20.15**	**4.78**	**21.26**	**15.21**	**2.66**	**C0118-023-1125-S**	**0.842**	**21.38**	**3.75**	**16.66**	**13.23**	**2.32**
C0118-023-1250-M	**0.118**	**3.00**	**0.023**	**0.58**	**1.250**	**31.75**	**0.899**	**22.85**	**0.879**	**22.34**	**4.78**	**21.26**	**13.63**	**2.39**	**C0118-023-1250-S**	**0.934**	**23.72**	**3.75**	**16.66**	**11.85**	**2.07**
C0118-023-1375-M	**0.118**	**3.00**	**0.023**	**0.58**	**1.375**	**34.93**	**0.988**	**25.10**	**0.966**	**24.53**	**4.78**	**21.26**	**12.35**	**2.16**	**C0118-023-1375-S**	**1.026**	**26.07**	**3.75**	**16.66**	**10.74**	**1.88**
C0118-023-1500-M	**0.118**	**3.00**	**0.023**	**0.58**	**1.500**	**38.10**	**1.077**	**27.35**	**1.052**	**26.72**	**4.78**	**21.26**	**11.29**	**1.98**	**C0118-023-1500-S**	**1.118**	**28.41**	**3.75**	**16.66**	**9.82**	**1.72**
C0118-023-1625-M	**0.118**	**3.00**	**0.023**	**0.58**	**1.625**	**41.28**	**1.165**	**29.60**	**1.138**	**28.91**	**4.78**	**21.26**	**10.40**	**1.82**	**C0118-023-1625-S**	**1.211**	**30.75**	**3.75**	**16.66**	**9.04**	**1.58**
C0118-023-1750-M	**0.118**	**3.00**	**0.023**	**0.58**	**1.750**	**44.45**	**1.254**	**31.85**	**1.225**	**31.11**	**4.78**	**21.26**	**9.63**	**1.69**	**C0118-023-1750-S**	**1.303**	**33.09**	**3.75**	**16.66**	**8.38**	**1.47**
C0118-023-1875-M	**0.118**	**3.00**	**0.023**	**0.58**	**1.875**	**47.63**	**1.342**	**34.10**	**1.311**	**33.30**	**4.78**	**21.26**	**8.97**	**1.57**	**C0118-023-1875-S**	**1.395**	**35.43**	**3.75**	**16.66**	**7.80**	**1.37**
D11100*	0.118	3.00	0.020	0.50	0.173	4.40	0.138	3.50	0.128	3.25	2.34	10.40	66.17	11.58	D21100*	0.138	3.50	1.95	8.66	55.14	9.65
D11110*	0.118	3.00	0.020	0.50	0.240	6.10	0.185	4.70	0.167	4.25	2.34	10.40	42.40	7.42	D21110*	0.185	4.70	1.95	8.66	35.31	6.18
D11120*	0.118	3.00	0.020	0.50	0.343	8.70	0.256	6.50	0.226	5.75	2.34	10.40	27.43	4.80	D21120*	0.256	6.50	1.95	8.66	22.86	4.00
D11130*	0.118	3.00	0.020	0.50	0.472	12.00	0.354	9.00	0.305	7.75	2.34	10.40	18.69	3.27	D21130*	0.354	9.00	1.95	8.66	15.54	2.72
D11140*	0.118	3.00	0.020	0.50	0.689	17.50	0.504	12.80	0.423	10.75	2.34	10.40	12.63	2.21	D21140*	0.504	12.80	1.95	8.66	10.51	1.84
C0120-010-0250-M*	0.120	3.05	0.010	0.25	0.250	6.35	0.101	2.57	0.064	1.63	0.48	2.14	3.20	0.56	C0120-010-0250-S*	0.137	3.48	0.30	1.34	2.67	0.47
C0120-010-0310-M*	0.120	3.05	0.010	0.25	0.310	7.87	0.118	3.00	0.073	1.85	0.48	2.14	2.50	0.44	C0120-010-0310-S*	0.165	4.20	0.30	1.34	2.08	0.36
C0120-010-0380-M*	0.120	3.05	0.010	0.25	0.380	9.65	0.140	3.56	0.083	2.11	0.48	2.14	2.00	0.35	C0120-010-0380-S*	0.199	5.06	0.30	1.34	1.67	0.29
C0120-010-0440-M*	0.120	3.05	0.010	0.25	0.440	11.18	0.158	4.01	0.092	2.34	0.48	2.14	1.70	0.30	C0120-010-0440-S*	0.227	5.77	0.30	1.34	1.42	0.25
C0120-010-0500-M*	0.120	3.05	0.010	0.25	0.500	12.70	0.180	4.57	0.101	2.57	0.48	2.14	1.50	0.26	C0120-010-0500-S*	0.259	6.58	0.30	1.34	1.25	0.22
C0120-010-0560-M*	0.120	3.05	0.010	0.25	0.560	14.22	0.217	5.51	0.109	2.77	0.48	2.14	1.40	0.25	C0120-010-0560-S*	0.302	7.66	0.30	1.34	1.17	0.20
C0120-010-0620-M*	0.120	3.05	0.010	0.25	0.620	15.75	0.220	5.59	0.118	3.00	0.48	2.14	1.20	0.21	C0120-010-0620-S*	0.319	8.10	0.30	1.34	1.00	0.18
C0120-010-0690-M*	0.120	3.05	0.010	0.25	0.690	17.53	0.256	6.50	0.129	3.28	0.48	2.14	1.10	0.19	C0120-010-0690-S*	0.361	9.18	0.30	1.34	0.92	0.16
C0120-010-0750-M*	0.120	3.05	0.010	0.25	0.750	19.05	0.270	6.86	0.137	3.48	0.48	2.14	1.00	0.18	C0120-010-0750-S*	0.388	9.87	0.30	1.34	0.83	0.15
C0120-010-0810-M*	0.120	3.05	0.010	0.25	0.810	20.57	0.277	7.04	0.146	3.71	0.48	2.14	0.90	0.16	C0120-010-0810-S*	0.408	10.37	0.30	1.34	0.75	0.13
C0120-010-0880-M*	0.120	3.05	0.010	0.25	0.880	22.35	0.347	8.81	0.156	3.96	0.48	2.14	0.90	0.16	C0120-010-0880-S*	0.478	12.15	0.30	1.34	0.75	0.13
C0120-010-0940-M*	0.120	3.05	0.010	0.25	0.940	23.88	0.343	8.71	0.165	4.19	0.48	2.14	0.80	0.14	C0120-010-0940-S*	0.488	12.40	0.30	1.34	0.67	0.12
C0120-010-1000-M*	0.120	3.05	0.010	0.25	1.000	25.40	0.314	7.98	0.174	4.42	0.48	2.14	0.70	0.12	C0120-010-1000-S*	0.484	12.28	0.30	1.34	0.58	0.10
C0120-010-1120-M*	0.120	3.05	0.010	0.25	1.120	28.45	0.434	11.02	0.192	4.88	0.48	2.14	0.70	0.12	C0120-010-1120-S*	0.604	15.33	0.30	1.34	0.58	0.10
C0120-010-1250-M*	0.120	3.05	0.010	0.25	1.250	31.75	0.452	11.48	0.211	5.36	0.48	2.14	0.60	0.11	C0120-010-1250-S*	0.647	16.45	0.30	1.34	0.50	0.09
C0120-010-1500-M*	0.120	3.05	0.010	0.25	1.500	38.10	0.540	13.72	0.248	6.30	0.48	2.14	0.50	0.09	C0120-010-1500-S*	0.777	19.73	0.30	1.34	0.42	0.07
C0120-011-0250-M*	**0.120**	**3.05**	**0.011**	**0.28**	**0.250**	**6.35**	**0.117**	**2.97**	**0.073**	**1.85**	**0.64**	**2.84**	**4.80**	**0.84**	**C0120-011-0250-S***	**0.135**	**3.42**	**0.46**	**2.05**	**4.00**	**0.70**
C0120-011-0313-M*	**0.120**	**3.05**	**0.011**	**0.28**	**0.313**	**7.95**	**0.140**	**3.57**	**0.085**	**2.17**	**0.64**	**2.84**	**3.70**	**0.65**	**C0120-011-0313-S***	**0.163**	**4.14**	**0.46**	**2.05**	**3.08**	**0.54**
C0120-011-0375-M*	**0.120**	**3.05**	**0.011**	**0.28**	**0.375**	**9.53**	**0.162**	**4.12**	**0.097**	**2.47**	**0.64**	**2.84**	**3.00**	**0.53**	**C0120-011-0375-S***	**0.190**	**4.83**	**0.46**	**2.05**	**2.50**	**0.44**
C0120-011-0438-M*	**0.120**	**3.05**	**0.011**	**0.28**	**0.438**	**11.13**	**0.192**	**4.89**	**0.107**	**2.71**	**0.64**	**2.84**	**2.60**	**0.46**	**C0120-011-0438-S***	**0.225**	**5.71**	**0.46**	**2.05**	**2.17**	**0.38**
C0120-011-0500-M*	**0.120**	**3.05**	**0.011**	**0.28**	**0.500**	**12.70**	**0.210**	**5.33**	**0.120**	**3.05**	**0.64**	**2.84**	**2.20**	**0.39**	**C0120-011-0500-S***	**0.248**	**6.30**	**0.46**	**2.05**	**1.83**	**0.32**
C0120-011-0563-M*	**0.120**	**3.05**	**0.011**	**0.28**	**0.563**	**14.30**	**0.244**	**6.19**	**0.129**	**3.26**	**0.64**	**2.84**	**2.00**	**0.35**	**C0120-011-0563-S***	**0.286**	**7.26**	**0.46**	**2.05**	**1.67**	**0.29**
C0120-011-0625-M*	**0.120**	**3.05**	**0.011**	**0.28**	**0.625**	**15.88**	**0.270**	**6.86**	**0.139**	**3.53**	**0.64**	**2.84**	**1.80**	**0.32**	**C0120-011-0625-S***	**0.317**	**8.05**	**0.46**	**2.05**	**1.50**	**0.26**
C0120-011-0750-M*	**0.120**	**3.05**	**0.011**	**0.28**	**0.750**	**19.05**	**0.294**	**7.46**	**0.169**	**4.29**	**0.64**	**2.84**	**1.40**	**0.25**	**C0120-011-0750-S***	**0.354**	**8.99**	**0.46**	**2.05**	**1.17**	**0.20**
C0120-011-0875-M*	**0.120**	**3.05**	**0.011**	**0.28**	**0.875**	**22.23**	**0.343**	**8.71**	**0.191**	**4.85**	**0.64**	**2.84**	**1.20**	**0.21**	**C0120-011-0875-S***	**0.413**	**10.49**	**0.46**	**2.05**	**1.00**	**0.18**
C0120-011-1000-M*	**0.120**	**3.05**	**0.011**	**0.28**	**1.000**	**25.40**	**0.419**	**10.65**	**0.205**	**5.21**	**0.64**	**2.84**	**1.10**	**0.19**	**C0120-011-1000-S***	**0.496**	**12.60**	**0.46**	**2.05**	**0.92**	**0.16**
C0120-012-0250-M*	0.120	3.05	0.012	0.31	0.250	6.35	0.124	3.15	0.081	2.06	0.79	3.51	6.30	1.10	C0120-012-0250-S*	0.153	3.88	0.51	2.27	5.25	0.92
C0120-012-0310-M*	0.120	3.05	0.012	0.31	0.310	7.87	0.152	3.86	0.093	2.36	0.79	3.51	5.00	0.88	C0120-012-0310-S*	0.188	4.77	0.51	2.27	4.17	0.73
C0120-012-0380-M*	0.120	3.05	0.012	0.31	0.380	9.65	0.181	4.60	0.107	2.72	0.79	3.51	4.00	0.70	C0120-012-0380-S*	0.227	5.77	0.51	2.27	3.33	0.58
C0120-012-0440-M*	0.120	3.05	0.012	0.31	0.440	11.18	0.207	5.26	0.119	3.02	0.79	3.51	3.40	0.60	C0120-012-0440-S*	0.260	6.61	0.51	2.27	2.83	0.50
C0120-012-0500-M*	0.120	3.05	0.012	0.31	0.500	12.70	0.237	6.02	0.131	3.33	0.79	3.51	3.00	0.53	C0120-012-0500-S*	0.296	7.52	0.51	2.27	2.50	0.44
C0120-012-0560-M*	0.120	3.05	0.012	0.31	0.560	14.22	0.256	6.50	0.143	3.63	0.79	3.51	2.60	0.46	C0120-012-0560-S*	0.325	8.25	0.51	2.27	2.17	0.38
C0120-012-0620-M*	0.120	3.05	0.012	0.31	0.620	15.75	0.291	7.39	0.155	3.94	0.79	3.51	2.40	0.42	C0120-012-0620-S*	0.365	9.28	0.51	2.27	2.00	0.35
C0120-012-0690-M*	0.120	3.05	0.012	0.31	0.690	17.53	0.317	8.05	0.169	4.29	0.79	3.51	2.10	0.37	C0120-012-0690-S*	0.399	10.13	0.51	2.27	1.75	0.31
C0120-012-0750-M*	0.120	3.05	0.012	0.31	0.750	19.05	0.355	9.02	0.181	4.60	0.79	3.51	2.00	0.35	C0120-012-0750-S*	0.444	11.28	0.51	2.27	1.67	0.29
C0120-012-0810-M*	0.120	3.05	0.012	0.31	0.810	20.57	0.370	9.40	0.193	4.90	0.79	3.51	1.80	0.32	C0120-012-0810-S*	0.470	11.95	0.51	2.27	1.50	0.26
C0120-012-0880-M*	0.120	3.05	0.012	0.31	0.880	22.35	0.415	10.54	0.207	5.26	0.79	3.51	1.70	0.30	C0120-012-0880-S*	0.520	13.22	0.51	2.27	1.42	0.25
C0120-012-0940-M*	0.120	3.05	0.012	0.31	0.940	23.88	0.413	10.49	0.219	5.56	0.79	3.51	1.50	0.26	C0120-012-0940-S*	0.532	13.52	0.51	2.27	1.25	0.22
C0120-012-1000-M*	0.120	3.05	0.012	0.31	1.000	25.40	0.473	12.01	0.231	5.87	0.79	3.51	1.50	0.26	C0120-012-1000-S*	0.592	15.05	0.51	2.27	1.25	0.22
C0120-012-1120-M*	0.120	3.05	0.012	0.31	1.120	28.45	0.507	12.88	0.255	6.48	0.79	3.51	1.30	0.23	C0120-012-1120-S*	0.650	16.50	0.51	2.27	1.08	0.19
C0120-012-1250-M*	0.120	3.05	0.012	0.31	1.250	31.75	0.592	15.04	0.281	7.14	0.79	3.51	1.20	0.21	C0120-012-1250-S*	0.740	18.81	0.51	2.27	1.00	0.18
C0120-012-1500-M*	0.120	3.05	0.012	0.31	1.500	38.10	0.710	18.03	0.331	8.41	0.79	3.51	1.00	0.18	C0120-012-1500-S*	0.889	22.57	0.51	2.27	0.83	0.15
C0120-014-0250-M*	0.120	3.05	0.014	0.36	0.250	6.35	0.138	3.51	0.101	2.57	1.23	5.47	11.00	1.93	C0120-014-0250-S*	0.164	4.16	0.79	3.52	9.16	1.60
C0120-014-0310-M*	0.120	3.05	0.014	0.36	0.310	7.87	0.167	4.24	0.117	2.97	1.23	5.47	8.60	1.51	C0120-014-0310-S*	0.200	5.07	0.79	3.52	7.16	1.25
C0120-014-0380-M*	0.120	3.05	0.014	0.36	0.380	9.65	0.202	5.13	0.136	3.45	1.23	5.47	6.90	1.21	C0120-014-0380-S*	0.242	6.16	0.79	3.52	5.75	1.01
C0120-014-0440-M*	0.120	3.05	0.014	0.36	0.440	11.18	0.232	5.89	0.152	3.86	1.23	5.47	5.90	1.03	C0120-014-0440-S*	0.279	7.09	0.79	3.52	4.91	0.86

Part Numbers with an "*" are squared and not ground. **Part Numbers in bold** represent the newly expanded Associated Spring RAYMOND compression spring offering.

MUSIC WIRE															STAINLESS STEEL						
Catalog #	Outside Diameter (OD)		Wire Diameter (d)		Free Length (L) Approx		Load Length (L_1)		Solid Height (Sh) Approx		Load (P) at L_1		Spring Rate (R)		Catalog #	Load Length (L_1)		Load (P) at L_1		Spring Rate (R)	
	in	mm	in	mm	in	mm	in	mm	in	mm	lb	N	lb/in	N/mm		in	mm	lb	N	lb/in	N/mm
C0120-014-0500-M*	0.120	3.05	0.014	0.36	0.500	12.70	0.263	6.68	0.168	4.27	1.23	5.47	5.20	0.91	C0120-014-0500-S*	0.317	8.06	0.79	3.52	4.33	0.76
C0120-014-0560-M*	0.120	3.05	0.014	0.36	0.560	14.22	0.291	7.39	0.184	4.67	1.23	5.47	4.60	0.81	C0120-014-0560-S*	0.354	8.98	0.79	3.52	3.83	0.67
C0120-014-0620-M*	0.120	3.05	0.014	0.36	0.620	15.75	0.320	8.13	0.200	5.08	1.23	5.47	4.10	0.72	C0120-014-0620-S*	0.388	9.87	0.79	3.52	3.42	0.60
C0120-014-0690-M*	0.120	3.05	0.014	0.36	0.690	17.53	0.355	9.02	0.219	5.56	1.23	5.47	3.70	0.65	C0120-014-0690-S*	0.433	11.01	0.79	3.52	3.08	0.54
C0120-014-0750-M*	0.120	3.05	0.014	0.36	0.750	19.05	0.385	9.78	0.235	5.97	1.23	5.47	3.40	0.60	C0120-014-0750-S*	0.471	11.96	0.79	3.52	2.83	0.50
C0120-014-0810-M*	0.120	3.05	0.014	0.36	0.810	20.57	0.414	10.52	0.251	6.38	1.23	5.47	3.10	0.54	C0120-014-0810-S*	0.504	12.79	0.79	3.52	2.58	0.45
C0120-014-0880-M*	0.120	3.05	0.014	0.36	0.880	22.35	0.456	11.58	0.269	6.83	1.23	5.47	2.90	0.51	C0120-014-0880-S*	0.553	14.04	0.79	3.52	2.42	0.42
C0120-014-0940-M*	0.120	3.05	0.014	0.36	0.940	23.88	0.484	12.29	0.285	7.24	1.23	5.47	2.70	0.47	C0120-014-0940-S*	0.588	14.94	0.79	3.52	2.25	0.39
C0120-014-1000-M*	0.120	3.05	0.014	0.36	1.000	25.40	0.508	12.90	0.301	7.65	1.23	5.47	2.50	0.44	C0120-014-1000-S*	0.620	15.75	0.79	3.52	2.08	0.36
C0120-014-1120-M*	0.120	3.05	0.014	0.36	1.120	28.45	0.561	14.25	0.333	8.46	1.23	5.47	2.20	0.39	C0120-014-1120-S*	0.688	17.49	0.79	3.52	1.83	0.32
C0120-014-1250-M*	0.120	3.05	0.014	0.36	1.250	31.75	0.632	16.05	0.368	9.35	1.23	5.47	2.00	0.35	C0120-014-1250-S*	0.775	19.69	0.79	3.52	1.67	0.29
C0120-014-1500-M*	0.120	3.05	0.014	0.36	1.500	38.10	0.776	19.71	0.434	11.02	1.23	5.47	1.70	0.30	C0120-014-1500-S*	0.941	23.91	0.79	3.52	1.42	0.25
C0120-016-0190-M*	0.120	3.05	0.016	0.41	0.190	4.83	0.118	3.00	0.101	2.57	1.84	8.18	25.60	4.48	C0120-016-0190-S*	0.136	3.45	1.15	5.13	21.32	3.73
C0120-016-0250-M*	0.120	3.05	0.016	0.41	0.250	6.35	0.145	3.68	0.119	3.02	1.84	8.18	17.50	3.06	C0120-016-0250-S*	0.171	4.34	1.15	5.13	14.58	2.55
C0120-016-0310-M*	0.120	3.05	0.016	0.41	0.310	7.87	0.179	4.55	0.139	3.53	1.84	8.18	14.00	2.45	C0120-016-0310-S*	0.211	5.36	1.15	5.13	11.66	2.04
C0120-016-0380-M*	0.120	3.05	0.016	0.41	0.380	9.65	0.217	5.51	0.163	4.14	1.84	8.18	11.30	1.98	C0120-016-0380-S*	0.257	6.54	1.15	5.13	9.41	1.65
C0120-016-0440-M*	0.120	3.05	0.016	0.41	0.440	11.18	0.246	6.25	0.187	4.75	1.84	8.18	9.50	1.66	C0120-016-0440-S*	0.294	7.47	1.15	5.13	7.91	1.38
C0120-016-0500-M*	0.120	3.05	0.016	0.41	0.500	12.70	0.280	7.11	0.208	5.28	1.84	8.18	8.30	1.45	C0120-016-0500-S*	0.333	8.46	1.15	5.13	6.91	1.21
C0120-016-0560-M*	0.120	3.05	0.016	0.41	0.560	14.22	0.308	7.82	0.231	5.87	1.84	8.18	7.30	1.28	C0120-016-0560-S*	0.370	9.41	1.15	5.13	6.08	1.06
C0120-016-0620-M*	0.120	3.05	0.016	0.41	0.620	15.75	0.342	8.69	0.251	6.38	1.84	8.18	6.60	1.16	C0120-016-0620-S*	0.410	10.42	1.15	5.13	5.50	0.96
C0120-016-0690-M*	0.120	3.05	0.016	0.41	0.690	17.53	0.375	9.53	0.281	7.14	1.84	8.18	5.80	1.02	C0120-016-0690-S*	0.451	11.46	1.15	5.13	4.83	0.85
C0120-016-0750-M*	0.120	3.05	0.016	0.41	0.750	19.05	0.404	10.26	0.303	7.70	1.84	8.18	5.30	0.93	C0120-016-0750-S*	0.489	12.41	1.15	5.13	4.41	0.77
C0120-016-1000-M*	0.120	3.05	0.016	0.41	1.000	25.40	0.551	14.00	0.378	9.60	1.84	8.18	4.10	0.72	C0120-016-1000-S*	0.662	16.82	1.15	5.13	3.42	0.60
C0120-016-1120-M*	0.120	3.05	0.016	0.41	1.120	28.45	0.609	15.47	0.419	10.64	1.84	8.18	3.60	0.63	C0120-016-1120-S*	0.735	18.68	1.15	5.13	3.00	0.53
C0120-016-1250-M*	0.120	3.05	0.016	0.41	1.250	31.75	0.675	17.15	0.463	11.76	1.84	8.18	3.20	0.56	C0120-016-1250-S*	0.817	20.76	1.15	5.13	2.67	0.47
C0120-016-1500-M*	0.120	3.05	0.016	0.41	1.500	38.10	0.843	21.41	0.544	13.82	1.84	8.18	2.80	0.49	C0120-016-1500-S*	1.005	25.54	1.15	5.13	2.33	0.41
C0120-018-0190-M*	0.120	3.05	0.018	0.46	0.190	4.83	0.128	3.25	0.117	2.97	2.56	11.39	41.30	7.23	C0120-018-0190-S*	0.144	3.65	1.59	7.08	34.40	6.02
C0120-018-0250-M*	0.120	3.05	0.018	0.46	0.250	6.35	0.159	4.04	0.139	3.53	2.56	11.39	28.20	4.94	C0120-018-0250-S*	0.182	4.63	1.59	7.08	23.49	4.11
C0120-018-0310-M*	0.120	3.05	0.018	0.46	0.310	7.87	0.193	4.90	0.166	4.22	2.56	11.39	21.90	3.83	C0120-018-0310-S*	0.223	5.66	1.59	7.08	18.24	3.19
C0120-018-0380-M*	0.120	3.05	0.018	0.46	0.380	9.65	0.237	6.02	0.194	4.93	2.56	11.39	17.90	3.13	C0120-018-0380-S*	0.273	6.94	1.59	7.08	14.91	2.61
C0120-018-0440-M*	0.120	3.05	0.018	0.46	0.440	11.18	0.271	6.88	0.220	5.59	2.56	11.39	15.20	2.66	C0120-018-0440-S*	0.314	7.98	1.59	7.08	12.66	2.22
C0120-018-0500-M*	0.120	3.05	0.018	0.46	0.500	12.70	0.305	7.75	0.248	6.30	2.56	11.39	13.10	2.29	C0120-018-0500-S*	0.354	8.99	1.59	7.08	10.91	1.91
C0120-018-0560-M*	0.120	3.05	0.018	0.46	0.560	14.22	0.336	8.53	0.279	7.09	2.56	11.39	11.40	2.00	C0120-018-0560-S*	0.392	9.97	1.59	7.08	9.50	1.66
C0120-018-0620-M*	0.120	3.05	0.018	0.46	0.620	15.75	0.378	9.60	0.297	7.54	2.56	11.39	10.60	1.86	C0120-018-0620-S*	0.440	11.17	1.59	7.08	8.83	1.55
C0120-018-0690-M*	0.120	3.05	0.018	0.46	0.690	17.53	0.414	10.52	0.332	8.43	2.56	11.39	9.30	1.63	C0120-018-0690-S*	0.484	12.31	1.59	7.08	7.75	1.36
C0120-018-0750-M*	0.120	3.05	0.018	0.46	0.750	19.05	0.448	11.38	0.359	9.12	2.56	11.39	8.50	1.49	C0120-018-0750-S*	0.525	13.34	1.59	7.08	7.08	1.24
C0120-018-1000-M*	0.120	3.05	0.018	0.46	1.000	25.40	0.600	15.24	0.455	11.56	2.56	11.39	6.40	1.12	C0120-018-1000-S*	0.701	17.81	1.59	7.08	5.33	0.93
C0120-018-1120-M*	0.120	3.05	0.018	0.46	1.120	28.45	0.671	17.04	0.505	12.83	2.56	11.39	5.70	1.00	C0120-018-1120-S*	0.785	19.93	1.59	7.08	4.75	0.83
C0120-018-1250-M*	0.120	3.05	0.018	0.46	1.250	31.75	0.748	19.00	0.559	14.20	2.56	11.39	5.10	0.89	C0120-018-1250-S*	0.875	22.23	1.59	7.08	4.25	0.74
C0120-018-1500-M*	0.120	3.05	0.018	0.46	1.500	38.10	0.890	22.61	0.663	16.84	2.56	11.39	4.20	0.74	C0120-018-1500-S*	1.045	26.54	1.59	7.08	3.50	0.61
C0120-020-0250-M*	0.120	3.05	0.020	0.51	0.250	6.35	0.176	4.47	0.163	4.14	3.31	14.72	44.80	7.84	C0120-020-0250-S*	0.193	4.90	2.13	9.47	37.32	6.53
C0120-020-0310-M*	0.120	3.05	0.020	0.51	0.310	7.87	0.215	5.46	0.192	4.88	3.31	14.72	34.80	6.09	C0120-020-0310-S*	0.237	6.01	2.13	9.47	28.99	5.07
C0120-020-0380-M*	0.120	3.05	0.020	0.51	0.380	9.65	0.260	6.60	0.226	5.74	3.31	14.72	27.70	4.85	C0120-020-0380-S*	0.288	7.31	2.13	9.47	23.07	4.04
C0120-020-0440-M*	0.120	3.05	0.020	0.51	0.440	11.18	0.299	7.59	0.256	6.50	3.31	14.72	23.50	4.11	C0120-020-0440-S*	0.331	8.41	2.13	9.47	19.58	3.43
C0120-020-0500-M*	0.120	3.05	0.020	0.51	0.500	12.70	0.338	8.59	0.285	7.24	3.31	14.72	20.40	3.57	C0120-020-0500-S*	0.375	9.52	2.13	9.47	16.99	2.97
C0120-020-0560-M*	0.120	3.05	0.020	0.51	0.560	14.22	0.377	9.58	0.314	7.98	3.31	14.72	18.10	3.17	C0120-020-0560-S*	0.419	10.64	2.13	9.47	15.08	2.64
C0120-020-0620-M*	0.120	3.05	0.020	0.51	0.620	15.75	0.416	10.57	0.344	8.74	3.31	14.72	16.20	2.84	C0120-020-0620-S*	0.462	11.74	2.13	9.47	13.49	2.36
C0120-020-0690-M*	0.120	3.05	0.020	0.51	0.690	17.53	0.461	11.71	0.378	9.60	3.31	14.72	14.50	2.54	C0120-020-0690-S*	0.514	13.05	2.13	9.47	12.08	2.11
C0120-020-0750-M*	0.120	3.05	0.020	0.51	0.750	19.05	0.500	12.70	0.407	10.34	3.31	14.72	13.20	2.31	C0120-020-0750-S*	0.556	14.13	2.13	9.47	11.00	1.93
C0120-020-0810-M*	0.120	3.05	0.020	0.51	0.810	20.57	0.539	13.69	0.437	11.10	3.31	14.72	12.20	2.14	C0120-020-0810-S*	0.601	15.25	2.13	9.47	10.16	1.78
C0120-020-0880-M*	0.120	3.05	0.020	0.51	0.880	22.35	0.584	14.83	0.471	11.96	3.31	14.72	11.20	1.96	C0120-020-0880-S*	0.652	16.56	2.13	9.47	9.33	1.63
C0120-020-0940-M*	0.120	3.05	0.020	0.51	0.940	23.88	0.623	15.82	0.500	12.70	3.31	14.72	10.40	1.82	C0120-020-0940-S*	0.694	17.63	2.13	9.47	8.66	1.52
C0120-020-1000-M*	0.120	3.05	0.020	0.51	1.000	25.40	0.662	16.81	0.530	13.46	3.31	14.72	9.80	1.72	C0120-020-1000-S*	0.739	18.78	2.13	9.47	8.16	1.43
C0120-020-1120-M*	0.120	3.05	0.020	0.51	1.120	28.45	0.739	18.77	0.588	14.94	3.31	14.72	8.70	1.52	C0120-020-1120-S*	0.826	20.99	2.13	9.47	7.25	1.27
C0120-020-1250-M*	0.120	3.05	0.020	0.51	1.250	31.75	0.824	20.93	0.652	16.56	3.31	14.72	7.80	1.37	C0120-020-1250-S*	0.922	23.43	2.13	9.47	6.50	1.14
C0120-020-1500-M*	0.120	3.05	0.020	0.51	1.500	38.10	0.985	25.02	0.774	19.66	3.31	14.72	6.40	1.12	C0120-020-1500-S*	1.101	27.96	2.13	9.47	5.33	0.93
C0120-022-0250-M	0.120	3.05	0.022	0.56	0.250	6.35	0.187	4.75	0.171	4.34	4.48	19.93	70.60	12.36	C0120-022-0250-S	0.203	5.16	2.76	12.27	58.81	10.29
C0120-022-0310-M	0.120	3.05	0.022	0.56	0.310	7.87	0.226	5.74	0.209	5.31	4.48	19.93	53.30	9.33	C0120-022-0310-S	0.248	6.30	2.76	12.27	44.40	7.77
C0120-022-0380-M	0.120	3.05	0.022	0.56	0.380	9.65	0.272	6.91	0.252	6.40	4.48	19.93	41.50	7.26	C0120-022-0380-S	0.300	7.63	2.76	12.27	34.57	6.05
C0120-022-0440-M	0.120	3.05	0.022	0.56	0.440	11.18	0.317	8.05	0.280	7.11	4.48	19.93	36.40	6.37	C0120-022-0440-S	0.349	8.87	2.76	12.27	30.32	5.31
C0120-022-0500-M	0.120	3.05	0.022	0.56	0.500	12.70	0.356	9.04	0.319	8.10	4.48	19.93	31.10	5.44	C0120-022-0500-S	0.394	10.00	2.76	12.27	25.91	4.53
C0120-022-0560-M	0.120	3.05	0.022	0.56	0.560	14.22	0.401	10.19	0.346	8.79	4.48	19.93	28.20	4.94	C0120-022-0560-S	0.443	11.24	2.76	12.27	23.49	4.11
C0120-022-0620-M	0.120	3.05	0.022	0.56	0.620	15.75	0.440	11.18	0.384	9.75	4.48	19.93	24.90	4.36	C0120-022-0620-S	0.487	12.37	2.76	12.27	20.74	3.63
C0120-022-0690-M	0.120	3.05	0.022	0.56	0.690	17.53	0.479	12.17	0.442	11.23	4.48	19.93	21.20	3.71	C0120-022-0690-S	0.534	13.56	2.76	12.27	17.66	3.09

FOR INFORMATION ON ALTERNATIVE FINISHES, SEE PAGE 311

Part Numbers with an "*" are squared and not ground. **Part Numbers in bold** represent the newly expanded Associated Spring RAYMOND compression spring offering.

MUSIC WIRE															STAINLESS STEEL					
Catalog #	Outside Diameter (OD)		Wire Diameter (d)		Free Length (L) Approx		Load Length (L_1)		Solid Height (Sh) Approx		Load (P) at L_1		Spring Rate (R)		Catalog #	Load Length (L_1)		Load (P) at L_1		Spring Rate (R)	
	in	mm	in	mm	in	mm	in	mm	in	mm	lb	N	lb/in	N/mm		in	mm	lb	N	lb/in	N/mm
C0120-022-0750-M	0.120	3.05	0.022	0.56	0.750	19.05	0.528	13.41	0.461	11.71	4.48	19.93	20.20	3.54	C0120-022-0750-S	0.586	14.89	2.76	12.27	16.83	2.95
C0120-022-0810-M	0.120	3.05	0.022	0.56	0.810	20.57	0.570	14.48	0.494	12.55	4.48	19.93	18.70	3.27	C0120-022-0810-S	0.633	16.08	2.76	12.27	15.58	2.73
C0120-022-0940-M	0.120	3.05	0.022	0.56	0.940	23.88	0.655	16.64	0.566	14.38	4.48	19.93	15.70	2.75	C0120-022-0940-S	0.729	18.52	2.76	12.27	13.08	2.29
C0120-022-1000-M	0.120	3.05	0.022	0.56	1.000	25.40	0.695	17.65	0.600	15.24	4.48	19.93	14.70	2.57	C0120-022-1000-S	0.775	19.68	2.76	12.27	12.25	2.14
C0120-022-1120-M	0.120	3.05	0.022	0.56	1.120	28.45	0.792	20.12	0.667	16.94	4.48	19.93	13.70	2.40	C0120-022-1120-S	0.878	22.31	2.76	12.27	11.41	2.00
C0120-022-1250-M	0.120	3.05	0.022	0.56	1.250	31.75	0.867	22.02	0.739	18.77	4.48	19.93	11.70	2.05	C0120-022-1250-S	0.967	24.56	2.76	12.27	9.75	1.71
C0120-022-1500-M	0.120	3.05	0.022	0.56	1.500	38.10	1.038	26.37	0.879	22.33	4.48	19.93	9.70	1.70	C0120-022-1500-S	1.159	29.43	2.76	12.27	8.08	1.41
C0120-024-0250-M	**0.120**	**3.05**	**0.024**	**0.61**	**0.250**	**6.35**	**0.199**	**5.04**	**0.177**	**4.49**	**5.52**	**24.57**	**107.40**	**18.80**	**C0120-024-0250-S**	**0.204**	**5.17**	**4.15**	**18.44**	**89.46**	**15.66**
C0120-024-0310-M	0.120	3.05	0.024	0.61	0.310	7.87	0.242	6.15	0.229	5.82	5.63	25.04	82.30	14.40	C0120-024-0310-S	0.259	6.57	3.52	15.64	68.56	12.00
C0120-024-0380-M	0.120	3.05	0.024	0.61	0.380	9.65	0.293	7.44	0.271	6.88	5.63	25.04	64.90	11.36	C0120-024-0380-S	0.315	8.00	3.52	15.64	54.06	9.46
C0120-024-0440-M	0.120	3.05	0.024	0.61	0.440	11.18	0.338	8.59	0.307	7.80	5.63	25.04	55.00	9.63	C0120-024-0440-S	0.363	9.23	3.52	15.64	45.82	8.02
C0120-024-0500-M	0.120	3.05	0.024	0.61	0.500	12.70	0.382	9.70	0.343	8.71	5.63	25.04	47.70	8.35	C0120-024-0500-S	0.411	10.45	3.52	15.64	39.73	6.95
C0120-024-0560-M	0.120	3.05	0.024	0.61	0.560	14.22	0.426	10.82	0.379	9.63	5.63	25.04	42.10	7.37	C0120-024-0560-S	0.460	11.68	3.52	15.64	35.07	6.14
C0120-024-0620-M	0.120	3.05	0.024	0.61	0.620	15.75	0.471	11.96	0.415	10.54	5.63	25.04	37.70	6.60	C0120-024-0620-S	0.508	12.90	3.52	15.64	31.40	5.50
C0120-024-0690-M	0.120	3.05	0.024	0.61	0.690	17.53	0.522	13.26	0.457	11.61	5.63	25.04	33.60	5.88	C0120-024-0690-S	0.564	14.33	3.52	15.64	27.99	4.90
C0120-024-0750-M	0.120	3.05	0.024	0.61	0.750	19.05	0.567	14.40	0.493	12.52	5.63	25.04	30.70	5.37	C0120-024-0750-S	0.612	15.56	3.52	15.64	25.57	4.47
C0120-024-0810-M	0.120	3.05	0.024	0.61	0.810	20.57	0.611	15.52	0.529	13.44	5.63	25.04	28.30	4.95	C0120-024-0810-S	0.661	16.78	3.52	15.64	23.57	4.12
C0120-024-0880-M	0.120	3.05	0.024	0.61	0.880	22.35	0.663	16.84	0.571	14.50	5.63	25.04	25.90	4.53	C0120-024-0880-S	0.717	18.21	3.52	15.64	21.57	3.77
C0120-024-0940-M	0.120	3.05	0.024	0.61	0.940	23.88	0.707	17.96	0.607	15.42	5.63	25.04	24.20	4.24	C0120-024-0940-S	0.766	19.44	3.52	15.64	20.16	3.53
C0120-024-1000-M	0.120	3.05	0.024	0.61	1.000	25.40	0.751	19.08	0.643	16.33	5.63	25.04	22.60	3.96	C0120-024-1000-S	0.813	20.66	3.52	15.64	18.83	3.30
C0120-024-1120-M	0.120	3.05	0.024	0.61	1.120	28.45	0.840	21.34	0.715	18.16	5.63	25.04	20.10	3.52	C0120-024-1120-S	0.910	23.11	3.52	15.64	16.74	2.93
C0120-024-1250-M	0.120	3.05	0.024	0.61	1.250	31.75	0.936	23.77	0.793	20.14	5.63	25.04	17.90	3.13	C0120-024-1250-S	1.014	25.76	3.52	15.64	14.91	2.61
C0120-024-1500-M	0.120	3.05	0.024	0.61	1.500	38.10	1.121	28.47	0.943	23.95	5.63	25.04	14.90	2.61	C0120-024-1500-S	1.217	30.90	3.52	15.64	12.41	2.17
C0125-014-0250-M*	**0.125**	**3.18**	**0.014**	**0.36**	**0.250**	**6.35**	**0.126**	**3.20**	**0.105**	**2.66**	**1.21**	**5.39**	**9.77**	**1.71**	**C0125-014-0250-S***	**0.141**	**3.58**	**0.89**	**3.95**	**8.14**	**1.42**
C0125-014-0313-M*	**0.125**	**3.18**	**0.014**	**0.36**	**0.313**	**7.95**	**0.154**	**3.91**	**0.122**	**3.10**	**1.21**	**5.39**	**7.61**	**1.33**	**C0125-014-0313-S***	**0.173**	**4.39**	**0.89**	**3.95**	**6.34**	**1.11**
C0125-014-0375-M*	**0.125**	**3.18**	**0.014**	**0.36**	**0.375**	**9.53**	**0.181**	**4.60**	**0.139**	**3.53**	**1.21**	**5.39**	**6.25**	**1.09**	**C0125-014-0375-S***	**0.205**	**5.20**	**0.89**	**3.95**	**5.21**	**0.91**
C0125-014-0438-M*	**0.125**	**3.18**	**0.014**	**0.36**	**0.438**	**11.13**	**0.209**	**5.31**	**0.156**	**3.97**	**1.21**	**5.39**	**5.29**	**0.93**	**C0125-014-0438-S***	**0.237**	**6.01**	**0.89**	**3.95**	**4.41**	**0.77**
C0125-014-0500-M*	**0.125**	**3.18**	**0.014**	**0.36**	**0.500**	**12.70**	**0.236**	**6.00**	**0.173**	**4.40**	**1.21**	**5.39**	**4.59**	**0.80**	**C0125-014-0500-S***	**0.268**	**6.80**	**0.89**	**3.95**	**3.82**	**0.67**
C0125-014-0563-M*	**0.125**	**3.18**	**0.014**	**0.36**	**0.563**	**14.30**	**0.264**	**6.70**	**0.191**	**4.84**	**1.21**	**5.39**	**4.05**	**0.71**	**C0125-014-0563-S***	**0.300**	**7.62**	**0.89**	**3.95**	**3.37**	**0.59**
C0125-014-0625-M*	**0.125**	**3.18**	**0.014**	**0.36**	**0.625**	**15.88**	**0.291**	**7.40**	**0.208**	**5.27**	**1.21**	**5.39**	**3.63**	**0.64**	**C0125-014-0625-S***	**0.332**	**8.42**	**0.89**	**3.95**	**3.02**	**0.53**
C0125-014-0688-M*	**0.125**	**3.18**	**0.014**	**0.36**	**0.688**	**17.48**	**0.320**	**8.12**	**0.225**	**5.70**	**1.21**	**5.39**	**3.29**	**0.58**	**C0125-014-0688-S***	**0.364**	**9.25**	**0.89**	**3.95**	**2.74**	**0.48**
C0125-014-0750-M*	**0.125**	**3.18**	**0.014**	**0.36**	**0.750**	**19.05**	**0.346**	**8.79**	**0.242**	**6.15**	**1.21**	**5.39**	**3.00**	**0.53**	**C0125-014-0750-S***	**0.395**	**10.03**	**0.89**	**3.95**	**2.50**	**0.44**
C0125-014-0813-M*	**0.125**	**3.18**	**0.014**	**0.36**	**0.813**	**20.65**	**0.374**	**9.50**	**0.259**	**6.58**	**1.21**	**5.39**	**2.76**	**0.48**	**C0125-014-0813-S***	**0.427**	**10.85**	**0.89**	**3.95**	**2.30**	**0.40**
C0125-014-0875-M*	**0.125**	**3.18**	**0.014**	**0.36**	**0.875**	**22.23**	**0.402**	**10.21**	**0.276**	**7.01**	**1.21**	**5.39**	**2.56**	**0.45**	**C0125-014-0875-S***	**0.459**	**11.65**	**0.89**	**3.95**	**2.13**	**0.37**
C0125-014-0938-M*	**0.125**	**3.18**	**0.014**	**0.36**	**0.938**	**23.83**	**0.429**	**10.90**	**0.293**	**7.45**	**1.21**	**5.39**	**2.38**	**0.42**	**C0125-014-0938-S***	**0.490**	**12.46**	**0.89**	**3.95**	**1.98**	**0.35**
C0125-014-1000-M*	**0.125**	**3.18**	**0.014**	**0.36**	**1.000**	**25.40**	**0.457**	**11.60**	**0.310**	**7.88**	**1.21**	**5.39**	**2.23**	**0.39**	**C0125-014-1000-S***	**0.522**	**13.27**	**0.89**	**3.95**	**1.86**	**0.33**
C0125-014-1125-M*	**0.125**	**3.18**	**0.014**	**0.36**	**1.125**	**28.58**	**0.513**	**13.03**	**0.344**	**8.73**	**1.21**	**5.39**	**1.98**	**0.35**	**C0125-014-1125-S***	**0.587**	**14.91**	**0.89**	**3.95**	**1.65**	**0.29**
C0125-014-1250-M*	**0.125**	**3.18**	**0.014**	**0.36**	**1.250**	**31.75**	**0.566**	**14.37**	**0.379**	**9.64**	**1.21**	**5.39**	**1.77**	**0.31**	**C0125-014-1250-S***	**0.648**	**16.46**	**0.89**	**3.95**	**1.47**	**0.26**
C0125-014-1375-M*	**0.125**	**3.18**	**0.014**	**0.36**	**1.375**	**34.93**	**0.623**	**15.81**	**0.413**	**10.48**	**1.21**	**5.39**	**1.61**	**0.28**	**C0125-014-1375-S***	**0.713**	**18.12**	**0.89**	**3.95**	**1.34**	**0.23**
C0125-014-1500-M*	**0.125**	**3.18**	**0.014**	**0.36**	**1.500**	**38.10**	**0.676**	**17.17**	**0.448**	**11.38**	**1.21**	**5.39**	**1.47**	**0.26**	**C0125-014-1500-S***	**0.775**	**19.69**	**0.89**	**3.95**	**1.22**	**0.21**
C0125-014-1750-M*	**0.125**	**3.18**	**0.014**	**0.36**	**1.750**	**44.45**	**0.740**	**18.81**	**0.539**	**13.68**	**1.21**	**5.39**	**1.20**	**0.21**	**C0125-014-1750-S***	**0.862**	**21.90**	**0.89**	**3.95**	**1.00**	**0.18**
C0125-015-0250-M*	**0.125**	**3.18**	**0.015**	**0.38**	**0.250**	**6.35**	**0.134**	**3.40**	**0.119**	**3.02**	**1.39**	**6.20**	**12.00**	**2.10**	**C0125-015-0250-S***	**0.142**	**3.61**	**1.08**	**4.80**	**10.00**	**1.75**
C0125-015-0310-M*	**0.125**	**3.18**	**0.015**	**0.38**	**0.310**	**7.87**	**0.168**	**4.26**	**0.150**	**3.80**	**1.19**	**5.32**	**8.40**	**1.47**	**C0125-015-0310-S***	**0.168**	**4.26**	**1.00**	**4.43**	**7.00**	**1.23**
C0125-015-0340-M*	**0.125**	**3.18**	**0.015**	**0.38**	**0.340**	**8.64**	**0.216**	**5.49**	**0.204**	**5.18**	**0.68**	**3.03**	**5.50**	**0.96**	**C0125-015-0340-S***	**0.216**	**5.49**	**0.57**	**2.53**	**4.58**	**0.80**
C0125-015-0380-M*	**0.125**	**3.18**	**0.015**	**0.38**	**0.380**	**9.65**	**0.198**	**5.02**	**0.174**	**4.42**	**1.24**	**5.51**	**6.80**	**1.19**	**C0125-015-0380-S***	**0.198**	**5.02**	**1.03**	**4.59**	**5.66**	**0.99**
C0125-015-0410-M*	**0.125**	**3.18**	**0.015**	**0.38**	**0.410**	**10.41**	**0.222**	**5.63**	**0.158**	**4.00**	**1.47**	**6.54**	**7.80**	**1.37**	**C0125-015-0410-S***	**0.244**	**6.19**	**1.08**	**4.80**	**6.50**	**1.14**
C0125-015-0440-M*	**0.125**	**3.18**	**0.015**	**0.38**	**0.440**	**11.18**	**0.270**	**6.86**	**0.252**	**6.41**	**0.71**	**3.17**	**4.20**	**0.74**	**C0125-015-0440-S***	**0.270**	**6.86**	**0.59**	**2.64**	**3.50**	**0.61**
C0125-015-0530-M*	**0.125**	**3.18**	**0.015**	**0.38**	**0.530**	**13.46**	**0.284**	**7.21**	**0.252**	**6.41**	**1.03**	**4.60**	**4.20**	**0.74**	**C0125-015-0530-S***	**0.284**	**7.21**	**0.86**	**3.83**	**3.50**	**0.61**
C0125-015-0630-M*	**0.125**	**3.18**	**0.015**	**0.38**	**0.630**	**16.00**	**0.299**	**7.59**	**0.252**	**6.41**	**1.39**	**6.19**	**4.20**	**0.74**	**C0125-015-0630-S***	**0.321**	**8.16**	**1.08**	**4.80**	**3.50**	**0.61**
C0125-015-0720-M*	**0.125**	**3.18**	**0.015**	**0.38**	**0.720**	**18.29**	**0.335**	**8.50**	**0.280**	**7.11**	**1.43**	**6.34**	**3.70**	**0.65**	**C0125-015-0720-S***	**0.370**	**9.39**	**1.08**	**4.80**	**3.08**	**0.54**
C0125-016-0250-M*	**0.125**	**3.18**	**0.016**	**0.41**	**0.250**	**6.35**	**0.154**	**3.91**	**0.117**	**2.98**	**1.76**	**7.82**	**18.29**	**3.20**	**C0125-016-0250-S***	**0.165**	**4.19**	**1.30**	**5.77**	**15.24**	**2.67**
C0125-016-0313-M*	**0.125**	**3.18**	**0.016**	**0.41**	**0.313**	**7.95**	**0.189**	**4.80**	**0.137**	**3.47**	**1.76**	**7.82**	**14.19**	**2.48**	**C0125-016-0313-S***	**0.203**	**5.16**	**1.30**	**5.77**	**11.82**	**2.07**
C0125-016-0375-M*	**0.125**	**3.18**	**0.016**	**0.41**	**0.375**	**9.53**	**0.224**	**5.68**	**0.156**	**3.95**	**1.76**	**7.82**	**11.62**	**2.03**	**C0125-016-0375-S***	**0.241**	**6.12**	**1.30**	**5.77**	**9.68**	**1.69**
C0125-016-0438-M*	**0.125**	**3.18**	**0.016**	**0.41**	**0.438**	**11.13**	**0.259**	**6.58**	**0.175**	**4.44**	**1.76**	**7.82**	**9.82**	**1.72**	**C0125-016-0438-S***	**0.279**	**7.10**	**1.30**	**5.77**	**8.18**	**1.43**
C0125-016-0500-M*	**0.125**	**3.18**	**0.016**	**0.41**	**0.500**	**12.70**	**0.294**	**7.46**	**0.194**	**4.92**	**1.76**	**7.82**	**8.52**	**1.49**	**C0125-016-0500-S***	**0.317**	**8.06**	**1.30**	**5.77**	**7.10**	**1.24**
C0125-016-0563-M*	**0.125**	**3.18**	**0.016**	**0.41**	**0.563**	**14.30**	**0.329**	**8.35**	**0.213**	**5.41**	**1.76**	**7.82**	**7.51**	**1.31**	**C0125-016-0563-S***	**0.356**	**9.03**	**1.30**	**5.77**	**6.26**	**1.10**
C0125-016-0625-M*	**0.125**	**3.18**	**0.016**	**0.41**	**0.625**	**15.88**	**0.363**	**9.23**	**0.232**	**5.90**	**1.76**	**7.82**	**6.72**	**1.18**	**C0125-016-0625-S***	**0.393**	**9.99**	**1.30**	**5.77**	**5.60**	**0.98**
C0125-016-0688-M*	**0.125**	**3.18**	**0.016**	**0.41**	**0.688**	**17.48**	**0.399**	**10.13**	**0.251**	**6.39**	**1.76**	**7.82**	**6.08**	**1.06**	**C0125-016-0688-S***	**0.432**	**10.97**	**1.30**	**5.77**	**5.06**	**0.89**
C0125-016-0750-M*	**0.125**	**3.18**	**0.016**	**0.41**	**0.750**	**19.05**	**0.433**	**11.00**	**0.271**	**6.87**	**1.76**	**7.82**	**5.55**	**0.97**	**C0125-016-0750-S***	**0.469**	**11.92**	**1.30**	**5.77**	**4.62**	**0.81**
C0125-016-0813-M*	**0.125**	**3.18**	**0.016**	**0.41**	**0.813**	**20.65**	**0.469**	**11.91**	**0.290**	**7.35**	**1.76**	**7.82**	**5.11**	**0.89**	**C0125-016-0813-S***	**0.508**	**12.91**	**1.30**	**5.77**	**4.26**	**0.75**
C0125-016-0938-M*	**0.125**	**3.18**	**0.016**	**0.41**	**0.938**	**23.83**	**0.538**	**13.67**	**0.328**	**8.34**	**1.76**	**7.82**	**4.40**	**0.77**	**C0125-016-0938-S***	**0.584**	**14.84**	**1.30**	**5.77**	**3.67**	**0.64**
C0125-016-1000-M*	**0.125**	**3.18**	**0.016**	**0.41**	**1.000**	**25.40**	**0.573**	**14.56**	**0.347**	**8.81**	**1.76**	**7.82**	**4.12**	**0.72**	**C0125-016-1000-S***	**0.622**	**15.80**	**1.30**	**5.77**	**3.43**	**0.60**
C0125-016-1250-M*	**0.125**	**3.18**	**0.016**	**0.41**	**1.250**	**31.75**	**0.712**	**18.09**	**0.424**	**10.77**	**1.76**	**7.82**	**3.27**	**0.57**	**C0125-016-1250-S***	**0.774**	**19.65**	**1.30**	**5.77**	**2.72**	**0.48**
C0125-016-1500-M*	**0.125**	**3.18**	**0.016**	**0.41**	**1.500**	**38.10**	**0.853**	**21.68**	**0.500**	**12.69**	**1.76**	**7.82**	**2.72**	**0.48**	**C0125-016-1500-S***	**0.927**	**23.56**	**1.30**	**5.77**	**2.27**	**0.40**

Part Numbers with an "*" are squared and not ground. **Part Numbers in bold** represent the newly expanded Associated Spring RAYMOND compression spring offering.

MUSIC WIRE															STAINLESS STEEL						
Catalog #	Outside Diameter (OD)		Wire Diameter (d)		Free Length (L) Approx		Load Length (L_1)		Solid Height (Sh) Approx		Load (P) at L_1		Spring Rate (R)		Catalog #	Load Length (L_1)		Load (P) at L_1		Spring Rate (R)	
	in	mm	in	mm	in	mm	in	mm	in	mm	lb	N	lb/in	N/mm		in	mm	lb	N	lb/in	N/mm
C0125-017-0250-M*	**0.125**	**3.18**	**0.017**	**0.43**	**0.250**	**6.35**	**0.155**	**3.95**	**0.131**	**3.32**	**2.08**	**9.26**	**22.00**	**3.85**	**C0125-017-0250-S***	**0.166**	**4.22**	**1.54**	**6.85**	**18.33**	**3.21**
C0125-017-0310-M*	**0.125**	**3.18**	**0.017**	**0.43**	**0.310**	**7.87**	**0.180**	**4.57**	**0.160**	**4.06**	**2.08**	**9.26**	**16.00**	**2.80**	**C0125-017-0310-S***	**0.194**	**4.94**	**1.54**	**6.85**	**13.33**	**2.33**
C0125-017-0380-M*	**0.125**	**3.18**	**0.017**	**0.43**	**0.380**	**9.65**	**0.220**	**5.59**	**0.184**	**4.68**	**2.08**	**9.26**	**13.00**	**2.28**	**C0125-017-0380-S***	**0.238**	**6.04**	**1.54**	**6.85**	**10.83**	**1.90**
C0125-017-0410-M*	**0.125**	**3.18**	**0.017**	**0.43**	**0.410**	**10.41**	**0.230**	**5.84**	**0.208**	**5.29**	**1.98**	**8.80**	**11.00**	**1.93**	**C0125-017-0410-S***	**0.242**	**6.15**	**1.54**	**6.85**	**9.16**	**1.60**
C0125-017-0560-M*	**0.125**	**3.18**	**0.017**	**0.43**	**0.560**	**14.22**	**0.316**	**8.03**	**0.287**	**7.28**	**1.78**	**7.92**	**7.30**	**1.28**	**C0125-017-0560-S***	**0.316**	**8.03**	**1.48**	**6.60**	**6.08**	**1.06**
C0125-018-0250-M*	**0.125**	**3.18**	**0.018**	**0.46**	**0.250**	**6.35**	**0.164**	**4.17**	**0.138**	**3.52**	**2.44**	**10.84**	**28.47**	**4.98**	**C0125-018-0250-S***	**0.174**	**4.41**	**1.81**	**8.04**	**23.72**	**4.15**
C0125-018-0313-M*	**0.125**	**3.18**	**0.018**	**0.46**	**0.313**	**7.95**	**0.202**	**5.14**	**0.163**	**4.13**	**2.44**	**10.84**	**22.00**	**3.85**	**C0125-018-0313-S***	**0.214**	**5.44**	**1.81**	**8.04**	**18.33**	**3.21**
C0125-018-0375-M*	**0.125**	**3.18**	**0.018**	**0.46**	**0.375**	**9.53**	**0.240**	**6.08**	**0.186**	**4.73**	**2.44**	**10.84**	**18.00**	**3.15**	**C0125-018-0375-S***	**0.254**	**6.46**	**1.81**	**8.04**	**14.99**	**2.62**
C0125-018-0410-M*	**0.125**	**3.18**	**0.018**	**0.46**	**0.410**	**10.41**	**0.242**	**6.15**	**0.223**	**5.66**	**2.35**	**10.46**	**14.00**	**2.45**	**C0125-018-0410-S***	**0.255**	**6.48**	**1.81**	**8.04**	**11.66**	**2.04**
C0125-018-0500-M*	**0.125**	**3.18**	**0.018**	**0.46**	**0.500**	**12.70**	**0.314**	**7.98**	**0.234**	**5.94**	**2.44**	**10.84**	**13.13**	**2.30**	**C0125-018-0500-S***	**0.335**	**8.50**	**1.81**	**8.04**	**10.94**	**1.91**
C0125-018-0563-M*	**0.125**	**3.18**	**0.018**	**0.46**	**0.563**	**14.30**	**0.352**	**8.94**	**0.258**	**6.56**	**2.44**	**10.84**	**11.56**	**2.02**	**C0125-018-0563-S***	**0.375**	**9.53**	**1.81**	**8.04**	**9.63**	**1.69**
C0125-018-0625-M*	**0.125**	**3.18**	**0.018**	**0.46**	**0.625**	**15.88**	**0.389**	**9.89**	**0.282**	**7.16**	**2.44**	**10.84**	**10.34**	**1.81**	**C0125-018-0625-S***	**0.415**	**10.54**	**1.81**	**8.04**	**8.61**	**1.51**
C0125-018-0688-M*	**0.125**	**3.18**	**0.018**	**0.46**	**0.688**	**17.48**	**0.427**	**10.85**	**0.306**	**7.77**	**2.44**	**10.84**	**9.34**	**1.63**	**C0125-018-0688-S***	**0.456**	**11.57**	**1.81**	**8.04**	**7.78**	**1.36**
C0125-018-0750-M*	**0.125**	**3.18**	**0.018**	**0.46**	**0.750**	**19.05**	**0.464**	**11.79**	**0.330**	**8.37**	**2.44**	**10.84**	**8.53**	**1.49**	**C0125-018-0750-S***	**0.496**	**12.59**	**1.81**	**8.04**	**7.11**	**1.24**
C0125-018-0813-M*	**0.125**	**3.18**	**0.018**	**0.46**	**0.813**	**20.65**	**0.502**	**12.75**	**0.354**	**8.98**	**2.44**	**10.84**	**7.84**	**1.37**	**C0125-018-0813-S***	**0.536**	**13.62**	**1.81**	**8.04**	**6.53**	**1.14**
C0125-018-0938-M*	**0.125**	**3.18**	**0.018**	**0.46**	**0.938**	**23.83**	**0.577**	**14.65**	**0.402**	**10.20**	**2.44**	**10.84**	**6.75**	**1.18**	**C0125-018-0938-S***	**0.616**	**15.66**	**1.81**	**8.04**	**5.62**	**0.98**
C0125-018-1000-M*	**0.125**	**3.18**	**0.018**	**0.46**	**1.000**	**25.40**	**0.614**	**15.60**	**0.425**	**10.80**	**2.44**	**10.84**	**6.32**	**1.11**	**C0125-018-1000-S***	**0.657**	**16.68**	**1.81**	**8.04**	**5.26**	**0.92**
C0125-018-1250-M*	**0.125**	**3.18**	**0.018**	**0.46**	**1.250**	**31.75**	**0.764**	**19.41**	**0.520**	**13.22**	**2.44**	**10.84**	**5.02**	**0.88**	**C0125-018-1250-S***	**0.818**	**20.77**	**1.81**	**8.04**	**4.18**	**0.73**
C0125-018-1500-M*	**0.125**	**3.18**	**0.018**	**0.46**	**1.500**	**38.10**	**0.914**	**23.21**	**0.616**	**15.66**	**2.44**	**10.84**	**4.16**	**0.73**	**C0125-018-1500-S***	**0.978**	**24.85**	**1.81**	**8.04**	**3.47**	**0.61**
C0125-023-0250-M	**0.125**	**3.18**	**0.023**	**0.58**	**0.250**	**6.35**	**0.187**	**4.76**	**0.169**	**4.29**	**4.76**	**21.19**	**76.00**	**13.30**	**C0125-023-0250-S**	**0.194**	**4.92**	**3.57**	**15.88**	**63.31**	**11.08**
C0125-023-0440-M	**0.125**	**3.18**	**0.023**	**0.58**	**0.440**	**11.18**	**0.311**	**7.91**	**0.296**	**7.51**	**4.76**	**21.19**	**37.00**	**6.48**	**C0125-023-0440-S**	**0.324**	**8.23**	**3.57**	**15.88**	**30.82**	**5.39**
C0125-023-0630-M	**0.125**	**3.18**	**0.023**	**0.58**	**0.630**	**16.00**	**0.439**	**11.16**	**0.414**	**10.53**	**4.76**	**21.19**	**25.00**	**4.38**	**C0125-023-0630-S**	**0.459**	**11.65**	**3.57**	**15.88**	**20.83**	**3.65**
C0125-023-0690-M	**0.125**	**3.18**	**0.023**	**0.58**	**0.690**	**17.53**	**0.479**	**12.18**	**0.464**	**11.80**	**4.63**	**20.60**	**22.00**	**3.85**	**C0125-023-0690-S**	**0.495**	**12.58**	**3.57**	**15.88**	**18.33**	**3.21**
C0125-023-0780-M	**0.125**	**3.18**	**0.023**	**0.58**	**0.780**	**19.81**	**0.546**	**13.87**	**0.530**	**13.46**	**4.44**	**19.76**	**19.00**	**3.33**	**C0125-023-0780-S**	**0.554**	**14.08**	**3.57**	**15.88**	**15.83**	**2.77**
D10550*	0.136	3.45	0.010	0.25	0.280	7.10	0.079	2.00	0.064	1.63	0.41	1.84	2.06	0.36	D20550*	0.079	2.00	0.34	1.53	1.71	0.30
D10560*	0.136	3.45	0.010	0.25	0.421	10.70	0.110	2.80	0.084	2.13	0.41	1.84	1.37	0.24	D20560*	0.110	2.80	0.34	1.53	1.14	0.20
D10570*	0.136	3.45	0.010	0.25	0.634	16.10	0.150	3.80	0.113	2.88	0.41	1.84	0.91	0.16	D20570*	0.150	3.80	0.34	1.53	0.74	0.13
D10580*	0.136	3.45	0.010	0.25	0.917	23.30	0.209	5.30	0.153	3.88	0.41	1.84	0.63	0.11	D20580*	0.209	5.30	0.34	1.53	0.51	0.09
D10590*	0.136	3.45	0.010	0.25	1.343	34.10	0.295	7.50	0.212	5.38	0.41	1.84	0.40	0.07	D20590*	0.295	7.50	0.34	1.53	0.34	0.06
D10750*	0.139	3.52	0.013	0.32	0.248	6.30	0.098	2.50	0.082	2.08	0.85	3.79	5.54	0.97	D20750*	0.098	2.50	0.71	3.16	4.63	0.81
D10760*	0.139	3.52	0.013	0.32	0.370	9.40	0.130	3.30	0.107	2.72	0.85	3.79	3.54	0.62	D20760*	0.130	3.30	0.71	3.16	2.97	0.52
D10770*	0.139	3.52	0.013	0.32	0.551	14.00	0.181	4.60	0.145	3.68	0.85	3.79	2.29	0.40	D20770*	0.181	4.60	0.71	3.16	1.89	0.33
D10780*	0.139	3.52	0.013	0.32	0.791	20.10	0.248	6.30	0.195	4.96	0.85	3.79	1.60	0.28	D20780*	0.248	6.30	0.71	3.16	1.31	0.23
D10790*	0.139	3.52	0.013	0.32	1.154	29.30	0.350	8.90	0.271	6.88	0.85	3.79	1.09	0.19	D20790*	0.350	8.90	0.71	3.16	0.91	0.16
C0140-010-0280-M*	**0.140**	**3.56**	**0.010**	**0.25**	**0.280**	**7.11**	**0.123**	**3.13**	**0.100**	**2.55**	**0.16**	**0.70**	**1.00**	**0.18**	**C0140-010-0280-S***	**0.123**	**3.13**	**0.13**	**0.58**	**0.83**	**0.15**
C0140-010-0500-M*	**0.140**	**3.56**	**0.010**	**0.25**	**0.500**	**12.70**	**0.186**	**4.73**	**0.137**	**3.48**	**0.20**	**0.91**	**0.65**	**0.11**	**C0140-010-0500-S***	**0.186**	**4.73**	**0.17**	**0.76**	**0.54**	**0.09**
C0140-010-0590-M*	**0.140**	**3.56**	**0.010**	**0.25**	**0.590**	**14.99**	**0.283**	**7.18**	**0.240**	**6.09**	**0.10**	**0.45**	**0.33**	**0.06**	**C0140-010-0590-S***	**0.283**	**7.18**	**0.10**	**0.45**	**0.33**	**0.06**
C0140-010-0750-M*	**0.140**	**3.56**	**0.010**	**0.25**	**0.750**	**19.05**	**0.249**	**6.33**	**0.169**	**4.29**	**0.25**	**1.11**	**0.50**	**0.09**	**C0140-010-0750-S***	**0.249**	**6.33**	**0.21**	**0.93**	**0.42**	**0.07**
C0140-010-0880-M*	**0.140**	**3.56**	**0.010**	**0.25**	**0.880**	**22.35**	**0.276**	**7.01**	**0.178**	**4.51**	**0.28**	**1.26**	**0.47**	**0.08**	**C0140-010-0880-S***	**0.276**	**7.01**	**0.24**	**1.05**	**0.39**	**0.07**
C0140-010-0940-M*	**0.140**	**3.56**	**0.010**	**0.25**	**0.940**	**23.88**	**0.335**	**8.51**	**0.240**	**6.09**	**0.20**	**0.89**	**0.33**	**0.06**	**C0140-010-0940-S***	**0.335**	**8.51**	**0.17**	**0.74**	**0.27**	**0.05**
C0140-010-1130-M*	**0.140**	**3.56**	**0.010**	**0.25**	**1.130**	**28.70**	**0.409**	**10.39**	**0.296**	**7.51**	**0.19**	**0.83**	**0.26**	**0.05**	**C0140-010-1130-S***	**0.409**	**10.39**	**0.16**	**0.69**	**0.22**	**0.04**
C0140-012-0380-M*	**0.140**	**3.56**	**0.012**	**0.31**	**0.380**	**9.65**	**0.139**	**3.54**	**0.102**	**2.58**	**0.67**	**3.00**	**2.80**	**0.49**	**C0140-012-0380-S***	**0.160**	**4.07**	**0.51**	**2.28**	**2.33**	**0.41**
C0140-012-0440-M*	**0.140**	**3.56**	**0.012**	**0.31**	**0.440**	**11.18**	**0.228**	**5.80**	**0.201**	**5.10**	**0.23**	**1.04**	**1.10**	**0.19**	**C0140-012-0440-S***	**0.228**	**5.80**	**0.19**	**0.86**	**0.92**	**0.16**
C0140-012-0880-M*	**0.140**	**3.56**	**0.012**	**0.31**	**0.880**	**22.35**	**0.308**	**7.81**	**0.217**	**5.51**	**0.57**	**2.55**	**1.00**	**0.18**	**C0140-012-0880-S***	**0.308**	**7.81**	**0.48**	**2.12**	**0.83**	**0.15**
C0140-012-0910-M*	**0.140**	**3.56**	**0.012**	**0.31**	**0.910**	**23.11**	**0.299**	**7.59**	**0.201**	**5.10**	**0.67**	**2.99**	**1.10**	**0.19**	**C0140-012-0910-S***	**0.351**	**8.91**	**0.51**	**2.28**	**0.92**	**0.16**
C0140-016-0440-M*	**0.140**	**3.56**	**0.016**	**0.41**	**0.440**	**11.18**	**0.240**	**6.08**	**0.155**	**3.95**	**1.58**	**7.04**	**7.90**	**1.38**	**C0140-016-0440-S***	**0.263**	**6.67**	**1.17**	**5.19**	**6.58**	**1.15**
C0140-016-1000-M*	**0.140**	**3.56**	**0.016**	**0.41**	**1.000**	**25.40**	**0.548**	**13.91**	**0.288**	**7.30**	**1.58**	**7.04**	**3.50**	**0.61**	**C0140-016-1000-S***	**0.599**	**15.23**	**1.17**	**5.19**	**2.92**	**0.51**
C0140-016-1030-M*	**0.140**	**3.56**	**0.016**	**0.41**	**1.030**	**26.16**	**0.550**	**13.97**	**0.302**	**7.67**	**1.58**	**7.04**	**3.30**	**0.58**	**C0140-016-1030-S***	**0.605**	**15.37**	**1.17**	**5.19**	**2.75**	**0.48**
C0140-016-1130-M*	**0.140**	**3.56**	**0.016**	**0.41**	**1.130**	**28.70**	**0.584**	**14.82**	**0.512**	**12.99**	**0.98**	**4.37**	**1.80**	**0.32**	**C0140-016-1130-S***	**0.584**	**14.82**	**0.82**	**3.64**	**1.50**	**0.26**
C0140-016-1380-M*	**0.140**	**3.56**	**0.016**	**0.41**	**1.380**	**35.05**	**0.668**	**16.96**	**0.569**	**14.46**	**1.14**	**5.07**	**1.60**	**0.28**	**C0140-016-1380-S***	**0.668**	**16.96**	**0.95**	**4.22**	**1.33**	**0.23**
C0140-016-1500-M*	**0.140**	**3.56**	**0.016**	**0.41**	**1.500**	**38.10**	**0.661**	**16.79**	**0.539**	**13.68**	**1.43**	**6.34**	**1.70**	**0.30**	**C0140-016-1500-S***	**0.675**	**17.15**	**1.17**	**5.19**	**1.42**	**0.25**
C0140-020-0310-M*	**0.140**	**3.56**	**0.020**	**0.51**	**0.310**	**7.87**	**0.201**	**5.10**	**0.167**	**4.23**	**2.94**	**13.09**	**27.00**	**4.73**	**C0140-020-0310-S***	**0.212**	**5.40**	**2.19**	**9.76**	**22.49**	**3.94**
C0140-020-0470-M*	**0.140**	**3.56**	**0.020**	**0.51**	**0.470**	**11.94**	**0.296**	**7.51**	**0.278**	**7.06**	**2.27**	**10.09**	**13.00**	**2.28**	**C0140-020-0470-S***	**0.296**	**7.51**	**1.89**	**8.40**	**10.83**	**1.90**
D10950*	0.142	3.60	0.016	0.40	0.220	5.60	0.110	2.80	0.102	2.60	1.43	6.37	13.03	2.28	D20950*	0.110	2.80	1.19	5.31	10.86	1.90
D10960*	0.142	3.60	0.016	0.40	0.327	8.30	0.154	3.90	0.134	3.40	1.43	6.37	8.29	1.45	D20960*	0.154	3.90	1.19	5.31	6.91	1.21
D10970*	0.142	3.60	0.016	0.40	0.472	12.00	0.213	5.40	0.181	4.60	1.43	6.37	5.37	0.94	D20970*	0.213	5.40	1.19	5.31	4.46	0.78
D10980*	0.142	3.60	0.016	0.40	0.689	17.50	0.295	7.50	0.244	6.20	1.43	6.37	3.66	0.64	D20980*	0.295	7.50	1.19	5.31	3.03	0.53
D10990*	0.142	3.60	0.016	0.40	1.004	25.50	0.417	10.60	0.339	8.60	1.43	6.37	2.46	0.43	D20990*	0.417	10.60	1.19	5.31	2.06	0.36
D11150*	0.146	3.70	0.020	0.50	0.217	5.50	0.146	3.70	0.128	3.25	2.25	10.00	31.83	5.57	D21150*	0.146	3.70	1.87	8.33	26.51	4.64
D11160*	0.146	3.70	0.020	0.50	0.311	7.90	0.201	5.10	0.167	4.25	2.25	10.00	20.17	3.53	D21160*	0.201	5.10	1.87	8.33	16.80	2.94
D11170*	0.146	3.70	0.020	0.50	0.453	11.50	0.280	7.10	0.226	5.75	2.25	10.00	13.03	2.28	D21170*	0.280	7.10	1.87	8.33	10.86	1.90
D11180*	0.146	3.70	0.020	0.50	0.630	16.00	0.386	9.80	0.305	7.75	2.25	10.00	8.91	1.56	D21180*	0.386	9.80	1.87	8.33	7.43	1.30
D11190*	0.146	3.70	0.020	0.50	0.925	23.50	0.551	14.00	0.423	10.75	2.25	10.00	6.00	1.05	D21190*	0.551	14.00	1.87	8.33	4.97	0.87
C0148-016-0250-M*	**0.148**	**3.76**	**0.016**	**0.41**	**0.250**	**6.35**	**0.124**	**3.16**	**0.107**	**2.72**	**1.50**	**6.66**	**11.90**	**2.08**	**C0148-016-0250-S***	**0.138**	**3.51**	**1.11**	**4.93**	**9.91**	**1.73**

FOR INFORMATION ON ALTERNATIVE FINISHES, SEE PAGE 311

Part Numbers with an "*" are squared and not ground. **Part Numbers in bold** represent the newly expanded Associated Spring RAYMOND compression spring offering.

(OD) 0.148 - 0.156

MUSIC WIRE															STAINLESS STEEL					
Catalog #	Outside Diameter (OD)		Wire Diameter (d)		Free Length (L) Approx		Load Length (L_1)		Solid Height (Sh) Approx		Load (P) at L_1		Spring Rate (R)		Catalog #	Load Length (L_1)		Load (P) at L_1		Spring Rate (R)	
	in	mm	in	mm	in	mm	in	mm	in	mm	lb	N	lb/in	N/mm		in	mm	lb	N	lb/in	N/mm
C0148-016-0313-M*	**0.148**	**3.76**	**0.016**	**0.41**	**0.313**	**7.95**	**0.150**	**3.80**	**0.125**	**3.18**	**1.50**	**6.69**	**9.20**	**1.61**	**C0148-016-0313-S***	**0.168**	**4.28**	**1.11**	**4.93**	**7.66**	**1.34**
C0148-016-0375-M*	**0.148**	**3.76**	**0.016**	**0.41**	**0.375**	**9.53**	**0.175**	**4.43**	**0.142**	**3.61**	**1.50**	**6.69**	**7.50**	**1.31**	**C0148-016-0375-S***	**0.198**	**5.02**	**1.11**	**4.93**	**6.25**	**1.09**
C0148-016-0438-M*	**0.148**	**3.76**	**0.016**	**0.41**	**0.438**	**11.13**	**0.203**	**5.16**	**0.158**	**4.01**	**1.50**	**6.69**	**6.40**	**1.12**	**C0148-016-0438-S***	**0.230**	**5.84**	**1.11**	**4.93**	**5.33**	**0.93**
C0148-016-0500-M*	**0.148**	**3.76**	**0.016**	**0.41**	**0.500**	**12.70**	**0.227**	**5.76**	**0.176**	**4.46**	**1.50**	**6.69**	**5.50**	**0.96**	**C0148-016-0500-S***	**0.258**	**6.55**	**1.11**	**4.93**	**4.58**	**0.80**
C0148-016-0563-M*	**0.148**	**3.76**	**0.016**	**0.41**	**0.563**	**14.30**	**0.256**	**6.51**	**0.191**	**4.85**	**1.50**	**6.69**	**4.90**	**0.86**	**C0148-016-0563-S***	**0.291**	**7.40**	**1.11**	**4.93**	**4.08**	**0.71**
C0148-016-0625-M*	**0.148**	**3.76**	**0.016**	**0.41**	**0.625**	**15.88**	**0.283**	**7.20**	**0.207**	**5.25**	**1.50**	**6.69**	**4.40**	**0.77**	**C0148-016-0625-S***	**0.323**	**8.19**	**1.11**	**4.93**	**3.67**	**0.64**
C0148-016-0688-M*	**0.148**	**3.76**	**0.016**	**0.41**	**0.688**	**17.48**	**0.303**	**7.68**	**0.227**	**5.76**	**1.50**	**6.69**	**3.90**	**0.68**	**C0148-016-0688-S***	**0.347**	**8.81**	**1.11**	**4.93**	**3.25**	**0.57**
C0148-016-0750-M*	**0.148**	**3.76**	**0.016**	**0.41**	**0.750**	**19.05**	**0.332**	**8.44**	**0.242**	**6.14**	**1.50**	**6.69**	**3.60**	**0.63**	**C0148-016-0750-S***	**0.380**	**9.66**	**1.11**	**4.93**	**3.00**	**0.53**
C0148-016-0813-M*	**0.148**	**3.76**	**0.016**	**0.41**	**0.813**	**20.65**	**0.357**	**9.08**	**0.259**	**6.58**	**1.50**	**6.69**	**3.30**	**0.58**	**C0148-016-0813-S***	**0.410**	**10.41**	**1.11**	**4.93**	**2.75**	**0.48**
C0148-016-0938-M*	**0.148**	**3.76**	**0.016**	**0.41**	**0.938**	**23.83**	**0.420**	**10.66**	**0.288**	**7.31**	**1.50**	**6.69**	**2.90**	**0.51**	**C0148-016-0938-S***	**0.479**	**12.17**	**1.11**	**4.93**	**2.42**	**0.42**
C0148-016-1000-M*	**0.148**	**3.76**	**0.016**	**0.41**	**1.000**	**25.40**	**0.443**	**11.26**	**0.305**	**7.75**	**1.50**	**6.69**	**2.70**	**0.47**	**C0148-016-1000-S***	**0.507**	**12.88**	**1.11**	**4.93**	**2.25**	**0.39**
C0148-016-1250-M*	**0.148**	**3.76**	**0.016**	**0.41**	**1.250**	**31.75**	**0.534**	**13.57**	**0.378**	**9.60**	**1.50**	**6.69**	**2.10**	**0.37**	**C0148-016-1250-S***	**0.616**	**15.65**	**1.11**	**4.93**	**1.75**	**0.31**
C0148-016-1500-M*	**0.148**	**3.76**	**0.016**	**0.41**	**1.500**	**38.10**	**0.665**	**16.89**	**0.433**	**10.99**	**1.50**	**6.69**	**1.80**	**0.32**	**C0148-016-1500-S***	**0.761**	**19.32**	**1.11**	**4.93**	**1.50**	**0.26**
C0148-018-0250-M*	**0.148**	**3.76**	**0.018**	**0.46**	**0.250**	**6.35**	**0.143**	**3.64**	**0.122**	**3.10**	**2.09**	**9.29**	**19.60**	**3.43**	**C0148-018-0250-S***	**0.155**	**3.94**	**1.55**	**6.89**	**16.33**	**2.86**
C0148-018-0313-M*	**0.148**	**3.76**	**0.018**	**0.46**	**0.313**	**7.95**	**0.176**	**4.46**	**0.142**	**3.61**	**2.09**	**9.29**	**15.20**	**2.66**	**C0148-018-0313-S***	**0.191**	**4.84**	**1.55**	**6.89**	**12.66**	**2.22**
C0148-018-0375-M*	**0.148**	**3.76**	**0.018**	**0.46**	**0.375**	**9.53**	**0.207**	**5.25**	**0.161**	**4.10**	**2.09**	**9.29**	**12.40**	**2.17**	**C0148-018-0375-S***	**0.225**	**5.72**	**1.55**	**6.89**	**10.33**	**1.81**
C0148-018-0438-M*	**0.148**	**3.76**	**0.018**	**0.46**	**0.438**	**11.13**	**0.237**	**6.02**	**0.182**	**4.61**	**2.09**	**9.29**	**10.40**	**1.82**	**C0148-018-0438-S***	**0.259**	**6.58**	**1.55**	**6.89**	**8.66**	**1.52**
C0148-018-0500-M*	**0.148**	**3.76**	**0.018**	**0.46**	**0.500**	**12.70**	**0.268**	**6.80**	**0.201**	**5.10**	**2.09**	**9.29**	**9.00**	**1.58**	**C0148-018-0500-S***	**0.293**	**7.45**	**1.55**	**6.89**	**7.50**	**1.31**
C0148-018-0563-M*	**0.148**	**3.76**	**0.018**	**0.46**	**0.563**	**14.30**	**0.302**	**7.67**	**0.219**	**5.56**	**2.09**	**9.29**	**8.00**	**1.40**	**C0148-018-0563-S***	**0.331**	**8.40**	**1.55**	**6.89**	**6.66**	**1.17**
C0148-018-0625-M*	**0.148**	**3.76**	**0.018**	**0.46**	**0.625**	**15.88**	**0.331**	**8.40**	**0.240**	**6.08**	**2.09**	**9.29**	**7.10**	**1.24**	**C0148-018-0625-S***	**0.363**	**9.22**	**1.55**	**6.89**	**5.91**	**1.03**
C0148-018-0688-M*	**0.148**	**3.76**	**0.018**	**0.46**	**0.688**	**17.48**	**0.362**	**9.18**	**0.260**	**6.59**	**2.09**	**9.29**	**6.40**	**1.12**	**C0148-018-0688-S***	**0.397**	**10.09**	**1.55**	**6.89**	**5.33**	**0.93**
C0148-018-0750-M*	**0.148**	**3.76**	**0.018**	**0.46**	**0.750**	**19.05**	**0.396**	**10.06**	**0.277**	**7.03**	**2.09**	**9.29**	**5.90**	**1.03**	**C0148-018-0750-S***	**0.435**	**11.04**	**1.55**	**6.89**	**4.91**	**0.86**
C0148-018-0813-M*	**0.148**	**3.76**	**0.018**	**0.46**	**0.813**	**20.65**	**0.426**	**10.82**	**0.297**	**7.55**	**2.09**	**9.29**	**5.40**	**0.95**	**C0148-018-0813-S***	**0.469**	**11.90**	**1.55**	**6.89**	**4.50**	**0.79**
C0148-018-0938-M*	**0.148**	**3.76**	**0.018**	**0.46**	**0.938**	**23.83**	**0.484**	**12.29**	**0.339**	**8.61**	**2.09**	**9.29**	**4.60**	**0.81**	**C0148-018-0938-S***	**0.534**	**13.56**	**1.55**	**6.89**	**3.83**	**0.67**
C0148-018-1000-M*	**0.148**	**3.76**	**0.018**	**0.46**	**1.000**	**25.40**	**0.514**	**13.06**	**0.359**	**9.11**	**2.09**	**9.29**	**4.30**	**0.75**	**C0148-018-1000-S***	**0.567**	**14.41**	**1.55**	**6.89**	**3.58**	**0.63**
C0148-018-1250-M*	**0.148**	**3.76**	**0.018**	**0.46**	**1.250**	**31.75**	**0.653**	**16.59**	**0.428**	**10.86**	**2.09**	**9.29**	**3.50**	**0.61**	**C0148-018-1250-S***	**0.719**	**18.25**	**1.55**	**6.89**	**2.92**	**0.51**
C0148-018-1500-M*	**0.148**	**3.76**	**0.018**	**0.46**	**1.500**	**38.10**	**0.780**	**19.80**	**0.504**	**12.81**	**2.09**	**9.29**	**2.90**	**0.51**	**C0148-018-1500-S***	**0.859**	**21.81**	**1.55**	**6.89**	**2.42**	**0.42**
C0148-021-0250-M	0.148	3.76	0.021	0.53	0.250	6.35	0.162	4.11	0.143	3.63	3.15	14.01	35.70	6.25	C0148-021-0250-S	0.182	4.61	2.03	9.05	29.74	5.20
C0148-021-0310-M	0.148	3.76	0.021	0.53	0.310	7.87	0.196	4.98	0.166	4.22	3.15	14.01	27.70	4.85	C0148-021-0310-S	0.222	5.64	2.03	9.05	23.07	4.04
C0148-021-0380-M	0.148	3.76	0.021	0.53	0.380	9.65	0.237	6.02	0.193	4.90	3.15	14.01	22.00	3.85	C0148-021-0380-S	0.269	6.83	2.03	9.05	18.33	3.21
C0148-021-0440-M	0.148	3.76	0.021	0.53	0.440	11.18	0.271	6.88	0.217	5.51	3.15	14.01	18.70	3.27	C0148-021-0440-S	0.309	7.86	2.03	9.05	15.58	2.73
C0148-021-0500-M	0.148	3.76	0.021	0.53	0.500	12.70	0.306	7.77	0.240	6.10	3.15	14.01	16.20	2.84	C0148-021-0500-S	0.349	8.87	2.03	9.05	13.49	2.36
C0148-021-0560-M	0.148	3.76	0.021	0.53	0.560	14.22	0.341	8.66	0.263	6.68	3.15	14.01	14.30	2.50	C0148-021-0560-S	0.389	9.89	2.03	9.05	11.91	2.08
C0148-021-0620-M	0.148	3.76	0.021	0.53	0.620	15.75	0.375	9.53	0.286	7.26	3.15	14.01	12.80	2.24	C0148-021-0620-S	0.429	10.90	2.03	9.05	10.66	1.87
C0148-021-0690-M	0.148	3.76	0.021	0.53	0.690	17.53	0.415	10.54	0.313	7.95	3.15	14.01	11.50	2.01	C0148-021-0690-S	0.478	12.13	2.03	9.05	9.58	1.68
C0148-021-0750-M	0.148	3.76	0.021	0.53	0.750	19.05	0.450	11.43	0.336	8.53	3.15	14.01	10.50	1.84	C0148-021-0750-S	0.517	13.14	2.03	9.05	8.75	1.53
C0148-021-0810-M	0.148	3.76	0.021	0.53	0.810	20.57	0.485	12.32	0.359	9.12	3.15	14.01	9.70	1.70	C0148-021-0810-S	0.558	14.18	2.03	9.05	8.08	1.41
C0148-021-0880-M	0.148	3.76	0.021	0.53	0.880	22.35	0.525	13.34	0.386	9.80	3.15	14.01	8.90	1.56	C0148-021-0880-S	0.606	15.38	2.03	9.05	7.41	1.30
C0148-021-0940-M	0.148	3.76	0.021	0.53	0.940	23.88	0.560	14.22	0.410	10.41	3.15	14.01	8.30	1.45	C0148-021-0940-S	0.646	16.40	2.03	9.05	6.91	1.21
C0148-021-1000-M	0.148	3.76	0.021	0.53	1.000	25.40	0.594	15.09	0.433	11.00	3.15	14.01	7.80	1.37	C0148-021-1000-S	0.687	17.45	2.03	9.05	6.50	1.14
C0148-021-1250-M	0.148	3.76	0.021	0.53	1.250	31.75	0.738	18.75	0.529	13.44	3.15	14.01	6.10	1.07	C0148-021-1250-S	0.850	21.58	2.03	9.05	5.08	0.89
C0148-021-1500-M	0.148	3.76	0.021	0.53	1.500	38.10	0.882	22.40	0.626	15.90	3.15	14.01	5.10	0.89	C0148-021-1500-S	1.021	25.94	2.03	9.05	4.25	0.74
C0148-023-0250-M	0.148	3.76	0.023	0.58	0.250	6.35	0.172	4.37	0.160	4.06	4.04	17.97	52.00	9.10	C0148-023-0250-S	0.190	4.82	2.61	11.62	43.32	7.58
C0148-023-0310-M	0.148	3.76	0.023	0.58	0.310	7.87	0.209	5.31	0.187	4.75	4.04	17.97	40.10	7.02	C0148-023-0310-S	0.232	5.89	2.61	11.62	33.40	5.85
C0148-023-0380-M	0.148	3.76	0.023	0.58	0.380	9.65	0.253	6.43	0.218	5.54	4.04	17.97	31.70	5.55	C0148-023-0380-S	0.281	7.14	2.61	11.62	26.41	4.62
C0148-023-0440-M	0.148	3.76	0.023	0.58	0.440	11.18	0.290	7.37	0.245	6.22	4.04	17.97	26.90	4.71	C0148-023-0440-S	0.323	8.22	2.61	11.62	22.41	3.92
C0148-023-0500-M	0.148	3.76	0.023	0.58	0.500	12.70	0.327	8.31	0.272	6.91	4.04	17.97	23.30	4.08	C0148-023-0500-S	0.365	9.28	2.61	11.62	19.41	3.40
C0148-023-0560-M	0.148	3.76	0.023	0.58	0.560	14.22	0.364	9.25	0.299	7.59	4.04	17.97	20.60	3.61	C0148-023-0560-S	0.408	10.36	2.61	11.62	17.16	3.00
C0148-023-0620-M	0.148	3.76	0.023	0.58	0.620	15.75	0.401	10.19	0.326	8.28	4.04	17.97	18.50	3.24	C0148-023-0620-S	0.451	11.44	2.61	11.62	15.41	2.70
C0148-023-0690-M	0.148	3.76	0.023	0.58	0.690	17.53	0.444	11.28	0.357	9.07	4.04	17.97	16.50	2.89	C0148-023-0690-S	0.500	12.70	2.61	11.62	13.74	2.40
C0148-023-0750-M	0.148	3.76	0.023	0.58	0.750	19.05	0.481	12.22	0.384	9.75	4.04	17.97	15.10	2.64	C0148-023-0750-S	0.542	13.78	2.61	11.62	12.58	2.20
C0148-023-0810-M	0.148	3.76	0.023	0.58	0.810	20.57	0.518	13.16	0.410	10.41	4.04	17.97	13.90	2.43	C0148-023-0810-S	0.584	14.85	2.61	11.62	11.58	2.03
C0148-023-0880-M	0.148	3.76	0.023	0.58	0.880	22.35	0.562	14.27	0.442	11.23	4.04	17.97	12.70	2.22	C0148-023-0880-S	0.633	16.08	2.61	11.62	10.58	1.85
C0148-023-0940-M	0.148	3.76	0.023	0.58	0.940	23.88	0.599	15.21	0.469	11.91	4.04	17.97	11.90	2.08	C0148-023-0940-S	0.677	17.18	2.61	11.62	9.91	1.73
C0148-023-1000-M	0.148	3.76	0.023	0.58	1.000	25.40	0.636	16.15	0.495	12.57	4.04	17.97	11.10	1.94	C0148-023-1000-S	0.718	18.23	2.61	11.62	9.25	1.62
C0148-023-1250-M	0.148	3.76	0.023	0.58	1.250	31.75	0.791	20.09	0.607	15.42	4.04	17.97	8.80	1.54	C0148-023-1250-S	0.894	22.70	2.61	11.62	7.33	1.28
C0148-023-1500-M	0.148	3.76	0.023	0.58	1.500	38.10	0.945	24.00	0.719	18.26	4.04	17.97	7.30	1.28	C0148-023-1500-S	1.071	27.19	2.61	11.62	6.08	1.06
D11350*	0.151	3.83	0.025	0.63	0.217	5.50	0.157	4.00	0.161	4.10	4.72	20.99	80.11	14.02	D21350*	0.157	4.00	3.93	17.48	66.74	11.68
D11360*	0.151	3.83	0.025	0.63	0.307	7.80	0.213	5.40	0.211	5.36	4.72	20.99	50.86	8.90	D21360*	0.213	5.40	3.93	17.48	42.34	7.41
D11370*	0.151	3.83	0.025	0.63	0.433	11.00	0.295	7.50	0.285	7.25	4.72	20.99	32.97	5.77	D21370*	0.295	7.50	3.93	17.48	27.49	4.81
D11380*	0.151	3.83	0.025	0.63	0.610	15.50	0.406	10.30	0.385	9.77	4.72	20.99	22.46	3.93	D21380*	0.406	10.30	3.93	17.48	18.69	3.27
D11390*	0.151	3.83	0.025	0.63	0.886	22.50	0.579	14.70	0.533	13.55	4.72	20.99	15.14	2.65	D21390*	0.579	14.70	3.93	17.48	12.63	2.21
C0156-010-0250-M*	**0.156**	**3.96**	**0.010**	**0.25**	**0.250**	**6.35**	**0.079**	**2.01**	**0.051**	**1.30**	**0.38**	**1.67**	**2.20**	**0.39**	**C0156-010-0250-S***	**0.101**	**2.58**	**0.27**	**1.21**	**1.83**	**0.32**
C0156-010-0313-M*	**0.156**	**3.96**	**0.010**	**0.25**	**0.313**	**7.95**	**0.094**	**2.39**	**0.058**	**1.48**	**0.37**	**1.66**	**1.71**	**0.30**	**C0156-010-0313-S***	**0.122**	**3.09**	**0.27**	**1.21**	**1.42**	**0.25**

Part Numbers with an "*" are squared and not ground. **Part Numbers in bold** represent the newly expanded Associated Spring RAYMOND compression spring offering.

MUSIC WIRE															STAINLESS STEEL						
Catalog #	Outside Diameter (OD)		Wire Diameter (d)		Free Length (L) Approx		Load Length (L_1)		Solid Height (Sh) Approx		Load (P) at L_1		Spring Rate (R)		Catalog #	Load Length (L_1)		Load (P) at L_1		Spring Rate (R)	
	in	mm	in	mm	in	mm	in	mm	in	mm	lb	N	lb/in	N/mm		in	mm	lb	N	lb/in	N/mm
C0156-010-0375-M*	0.156	3.96	0.010	0.25	0.375	9.53	0.109	2.77	0.065	1.66	0.37	1.66	1.40	0.25	**C0156-010-0375-S***	0.141	3.59	0.27	1.21	1.17	0.20
C0156-010-0438-M*	0.156	3.96	0.010	0.25	0.438	11.13	0.124	3.15	0.072	1.83	0.37	1.66	1.19	0.21	**C0156-010-0438-S***	0.163	4.15	0.27	1.21	0.99	0.17
C0156-010-0500-M*	0.156	3.96	0.010	0.25	0.500	12.70	0.139	3.52	0.079	2.00	0.37	1.66	1.03	0.18	**C0156-010-0500-S***	0.183	4.64	0.27	1.21	0.86	0.15
C0156-010-0563-M*	0.156	3.96	0.010	0.25	0.563	14.30	0.153	3.89	0.085	2.15	0.37	1.66	0.91	0.16	**C0156-010-0563-S***	0.204	5.17	0.27	1.21	0.76	0.13
C0156-010-0625-M*	0.156	3.96	0.010	0.25	0.625	15.88	0.168	4.26	0.091	2.32	0.37	1.65	0.81	0.14	**C0156-010-0625-S***	0.221	5.62	0.27	1.21	0.67	0.12
C0156-010-0750-M*	0.156	3.96	0.010	0.25	0.750	19.05	0.197	4.99	0.104	2.64	0.37	1.65	0.67	0.12	**C0156-010-0750-S***	0.262	6.66	0.27	1.21	0.56	0.10
C0156-010-0875-M*	0.156	3.96	0.010	0.25	0.875	22.23	0.226	5.73	0.117	2.96	0.37	1.65	0.57	0.10	**C0156-010-0875-S***	0.301	7.66	0.27	1.21	0.47	0.08
C0156-010-1000-M*	0.156	3.96	0.010	0.25	1.000	25.40	0.254	6.45	0.128	3.26	0.37	1.66	0.50	0.09	**C0156-010-1000-S***	0.346	8.79	0.27	1.21	0.42	0.07
C0156-011-0250-M*	0.156	3.96	0.011	0.28	0.250	6.35	0.089	2.25	0.058	1.48	0.50	2.21	3.08	0.54	**C0156-011-0250-S***	0.110	2.80	0.36	1.60	2.57	0.45
C0156-011-0313-M*	0.156	3.96	0.011	0.28	0.313	7.95	0.105	2.67	0.067	1.69	0.50	2.21	2.39	0.42	**C0156-011-0313-S***	0.133	3.37	0.36	1.60	1.99	0.35
C0156-011-0375-M*	0.156	3.96	0.011	0.28	0.375	9.53	0.120	3.06	0.075	1.90	0.50	2.21	1.95	0.34	**C0156-011-0375-S***	0.154	3.91	0.36	1.60	1.62	0.28
C0156-011-0438-M*	0.156	3.96	0.011	0.28	0.438	11.13	0.137	3.48	0.083	2.11	0.50	2.21	1.65	0.29	**C0156-011-0438-S***	0.177	4.49	0.36	1.60	1.37	0.24
C0156-011-0500-M*	0.156	3.96	0.011	0.28	0.500	12.70	0.153	3.88	0.090	2.30	0.50	2.21	1.43	0.25	**C0156-011-0500-S***	0.199	5.04	0.36	1.60	1.19	0.21
C0156-011-0563-M*	0.156	3.96	0.011	0.28	0.563	14.30	0.169	4.29	0.098	2.49	0.50	2.21	1.26	0.22	**C0156-011-0563-S***	0.221	5.61	0.36	1.60	1.05	0.18
C0156-011-0625-M*	0.156	3.96	0.011	0.28	0.625	15.88	0.186	4.71	0.105	2.67	0.50	2.21	1.13	0.20	**C0156-011-0625-S***	0.244	6.19	0.36	1.60	0.94	0.16
C0156-011-0750-M*	0.156	3.96	0.011	0.28	0.750	19.05	0.216	5.49	0.120	3.06	0.50	2.21	0.93	0.16	**C0156-011-0750-S***	0.287	7.28	0.36	1.60	0.77	0.13
C0156-011-0875-M*	0.156	3.96	0.011	0.28	0.875	22.23	0.246	6.26	0.136	3.44	0.50	2.21	0.79	0.14	**C0156-011-0875-S***	0.329	8.37	0.36	1.60	0.66	0.12
C0156-011-1000-M*	0.156	3.96	0.011	0.28	1.000	25.40	0.280	7.12	0.150	3.82	0.50	2.21	0.69	0.12	**C0156-011-1000-S***	0.375	9.53	0.36	1.60	0.57	0.10
C0156-012-0250-M*	0.156	3.96	0.012	0.31	0.250	6.35	0.097	2.46	0.066	1.67	0.64	2.83	4.15	0.73	**C0156-012-0250-S***	0.116	2.96	0.46	2.05	3.46	0.61
C0156-012-0313-M*	0.156	3.96	0.012	0.31	0.313	7.95	0.115	2.92	0.076	1.92	0.64	2.83	3.21	0.56	**C0156-012-0313-S***	0.140	3.56	0.46	2.05	2.67	0.47
C0156-012-0375-M*	0.156	3.96	0.012	0.31	0.375	9.53	0.132	3.36	0.086	2.17	0.64	2.83	2.62	0.46	**C0156-012-0375-S***	0.163	4.15	0.46	2.05	2.18	0.38
C0156-012-0438-M*	0.156	3.96	0.012	0.31	0.438	11.13	0.150	3.82	0.095	2.41	0.64	2.83	2.21	0.39	**C0156-012-0438-S***	0.187	4.75	0.46	2.05	1.84	0.32
C0156-012-0500-M*	0.156	3.96	0.012	0.31	0.500	12.70	0.169	4.29	0.103	2.62	0.64	2.83	1.92	0.34	**C0156-012-0500-S***	0.211	5.37	0.46	2.05	1.60	0.28
C0156-012-0563-M*	0.156	3.96	0.012	0.31	0.563	14.30	0.187	4.75	0.112	2.85	0.64	2.83	1.69	0.30	**C0156-012-0563-S***	0.235	5.97	0.46	2.05	1.41	0.25
C0156-012-0625-M*	0.156	3.96	0.012	0.31	0.625	15.88	0.204	5.18	0.121	3.08	0.64	2.83	1.51	0.26	**C0156-012-0625-S***	0.258	6.55	0.46	2.05	1.26	0.22
C0156-012-0750-M*	0.156	3.96	0.012	0.31	0.750	19.05	0.237	6.03	0.139	3.54	0.64	2.83	1.24	0.22	**C0156-012-0750-S***	0.303	7.69	0.46	2.05	1.03	0.18
C0156-012-0875-M*	0.156	3.96	0.012	0.31	0.875	22.23	0.275	6.99	0.156	3.97	0.64	2.83	1.06	0.19	**C0156-012-0875-S***	0.352	8.94	0.46	2.05	0.88	0.15
C0156-012-1000-M*	0.156	3.96	0.012	0.31	1.000	25.40	0.309	7.85	0.175	4.43	0.64	2.83	0.92	0.16	**C0156-012-1000-S***	0.397	10.09	0.46	2.05	0.77	0.13
C0156-013-0250-M*	0.156	3.96	0.013	0.33	0.250	6.35	0.105	2.66	0.074	1.87	0.80	3.55	5.49	0.96	**C0156-013-0250-S***	0.123	3.12	0.58	2.59	4.57	0.80
C0156-013-0375-M*	0.156	3.96	0.013	0.33	0.375	9.53	0.144	3.66	0.097	2.45	0.80	3.55	3.45	0.60	**C0156-013-0375-S***	0.173	4.38	0.58	2.59	2.87	0.50
C0156-013-0500-M*	0.156	3.96	0.013	0.33	0.500	12.70	0.182	4.63	0.117	2.98	0.80	3.55	2.51	0.44	**C0156-013-0500-S***	0.222	5.63	0.58	2.59	2.09	0.37
C0156-013-0625-M*	0.156	3.96	0.013	0.33	0.625	15.88	0.222	5.65	0.138	3.50	0.80	3.55	1.98	0.35	**C0156-013-0625-S***	0.272	6.92	0.58	2.59	1.65	0.29
C0156-013-0750-M*	0.156	3.96	0.013	0.33	0.750	19.05	0.261	6.63	0.159	4.03	0.80	3.55	1.63	0.29	**C0156-013-0750-S***	0.322	8.17	0.58	2.59	1.36	0.24
C0156-013-1000-M*	0.156	3.96	0.013	0.33	1.000	25.40	0.341	8.67	0.199	5.06	0.80	3.55	1.21	0.21	**C0156-013-1000-S***	0.423	10.74	0.58	2.59	1.01	0.18
C0156-013-1380-M*	0.156	3.96	0.013	0.33	1.380	35.05	0.484	12.30	0.256	6.51	0.80	3.55	0.89	0.16	**C0156-013-1380-S***	0.595	15.12	0.58	2.59	0.74	0.13
C0156-013-1750-M*	0.156	3.96	0.013	0.33	1.750	44.45	0.611	15.52	0.315	7.99	0.80	3.55	0.70	0.12	**C0156-013-1750-S***	0.752	19.11	0.58	2.59	0.58	0.10
C0156-016-0250-M*	0.156	3.96	0.016	0.41	0.250	6.35	0.120	3.05	0.102	2.59	1.40	6.25	10.82	1.89	**C0156-016-0250-S***	0.133	3.38	1.06	4.69	9.01	1.58
C0156-016-0310-M*	0.156	3.96	0.016	0.41	0.310	7.87	0.144	3.65	0.117	2.98	1.43	6.36	8.60	1.51	**C0156-016-0310-S***	0.163	4.13	1.06	4.69	7.16	1.25
C0156-016-0380-M*	0.156	3.96	0.016	0.41	0.380	9.65	0.192	4.87	0.126	3.21	1.43	6.36	7.60	1.33	**C0156-016-0380-S***	0.213	5.42	1.06	4.69	6.33	1.11
C0156-016-0440-M*	0.156	3.96	0.016	0.41	0.440	11.18	0.215	5.47	0.185	4.69	0.97	4.30	4.30	0.75	**C0156-016-0440-S***	0.215	5.47	0.80	3.58	3.58	0.63
C0156-016-0500-M*	0.156	3.96	0.016	0.41	0.500	12.70	0.239	6.06	0.202	5.14	0.99	4.42	3.80	0.67	**C0156-016-0500-S***	0.239	6.06	0.83	3.68	3.17	0.55
C0156-016-0563-M*	0.156	3.96	0.016	0.41	0.563	14.30	0.241	6.12	0.180	4.58	1.43	6.36	4.44	0.78	**C0156-016-0563-S***	0.278	7.05	1.06	4.69	3.70	0.65
C0156-016-0625-M*	0.156	3.96	0.016	0.41	0.625	15.88	0.266	6.74	0.195	4.96	1.43	6.36	3.98	0.70	**C0156-016-0625-S***	0.307	7.79	1.06	4.69	3.32	0.58
C0156-016-0688-M*	0.156	3.96	0.016	0.41	0.688	17.48	0.291	7.38	0.211	5.35	1.43	6.36	3.60	0.63	**C0156-016-0688-S***	0.336	8.54	1.06	4.69	3.00	0.53
C0156-016-0750-M*	0.156	3.96	0.016	0.41	0.750	19.05	0.340	8.64	0.281	7.14	1.02	4.56	2.50	0.44	**C0156-016-0750-S***	0.340	8.64	0.85	3.80	2.08	0.36
C0156-016-1000-M*	0.156	3.96	0.016	0.41	1.000	25.40	0.428	10.86	0.281	7.14	1.43	6.36	2.50	0.44	**C0156-016-1000-S***	0.493	12.53	1.06	4.69	2.08	0.36
C0156-016-1125-M*	0.156	3.96	0.016	0.41	1.125	28.58	0.463	11.75	0.317	8.06	1.43	6.36	2.16	0.38	**C0156-016-1125-S***	0.539	13.68	1.06	4.69	1.80	0.32
C0156-016-1250-M*	0.156	3.96	0.016	0.41	1.250	31.75	0.513	13.02	0.348	8.83	1.43	6.36	1.94	0.34	**C0156-016-1250-S***	0.597	15.17	1.06	4.69	1.62	0.28
C0156-016-1380-M*	0.156	3.96	0.016	0.41	1.380	35.05	0.585	14.86	0.371	9.42	1.43	6.36	1.80	0.32	**C0156-016-1380-S***	0.676	17.18	1.06	4.69	1.50	0.26
C0156-016-1500-M*	0.156	3.96	0.016	0.41	1.500	38.10	0.611	15.53	0.409	10.38	1.43	6.36	1.61	0.28	**C0156-016-1500-S***	0.713	18.12	1.06	4.69	1.34	0.23
C0156-016-1750-M*	0.156	3.96	0.016	0.41	1.750	44.45	0.728	18.49	0.462	11.74	1.43	6.36	1.40	0.25	**C0156-016-1750-S***	0.845	21.47	1.06	4.69	1.17	0.20
C0156-020-0380-M*	0.156	3.96	0.020	0.51	0.380	9.65	0.232	5.89	0.170	4.31	2.67	11.86	18.00	3.15	**C0156-020-0380-S***	0.247	6.29	1.99	8.84	14.99	2.62
C0156-020-0560-M*	0.156	3.96	0.020	0.51	0.560	14.22	0.318	8.07	0.238	6.03	2.67	11.86	11.00	1.93	**C0156-020-0560-S***	0.343	8.71	1.99	8.84	9.16	1.60
C0156-020-0810-M*	0.156	3.96	0.020	0.51	0.810	20.57	0.483	12.28	0.447	11.35	1.63	7.26	5.00	0.88	**C0156-020-0810-S***	0.483	12.28	1.36	6.05	4.17	0.73
C0156-020-1250-M*	0.156	3.96	0.020	0.51	1.250	31.75	0.648	16.45	0.568	14.43	2.29	10.18	3.80	0.67	**C0156-020-1250-S***	0.648	16.45	1.91	8.48	3.17	0.55
C0156-020-1500-M*	0.156	3.96	0.020	0.51	1.500	38.10	0.833	21.16	0.543	13.79	2.67	11.86	4.00	0.70	**C0156-020-1500-S***	0.904	22.95	1.99	8.84	3.33	0.58
C0156-020-1560-M*	0.156	3.96	0.020	0.51	1.560	39.62	0.933	23.69	0.863	21.92	1.51	6.70	2.40	0.42	**C0156-020-1560-S***	0.933	23.69	1.25	5.58	2.00	0.35
C0156-022-0380-M	0.156	3.96	0.022	0.56	0.380	9.65	0.222	5.64	0.193	4.91	3.47	15.44	22.00	3.85	**C0156-022-0380-S**	0.238	6.05	2.60	11.55	18.33	3.21
C0156-022-0530-M	0.156	3.96	0.022	0.56	0.530	13.46	0.318	8.08	0.295	7.49	2.75	12.25	13.00	2.28	**C0156-022-0530-S**	0.318	8.08	2.29	10.20	10.83	1.90
C0156-022-0690-M	0.156	3.96	0.022	0.56	0.690	17.53	0.379	9.62	0.340	8.64	3.42	15.23	11.00	1.93	**C0156-022-0690-S**	0.407	10.33	2.60	11.55	9.16	1.60
C0156-023-0250-M	0.156	3.96	0.023	0.58	0.250	6.35	0.168	4.28	0.133	3.38	3.92	17.45	48.13	8.42	**C0156-023-0250-S**	0.177	4.49	2.94	13.08	40.09	7.02
C0156-023-0313-M	0.156	3.96	0.023	0.58	0.313	7.95	0.206	5.24	0.161	4.08	3.92	17.45	36.77	6.43	**C0156-023-0313-S**	0.217	5.51	2.94	13.08	30.63	5.36
C0156-023-0380-M	0.156	3.96	0.023	0.58	0.380	9.65	0.253	6.44	0.182	4.61	3.92	17.45	31.00	5.43	**C0156-023-0380-S**	0.266	6.76	2.94	13.08	25.82	4.52
C0156-023-0438-M	0.156	3.96	0.023	0.58	0.438	11.13	0.281	7.15	0.213	5.41	3.92	17.45	25.05	4.38	**C0156-023-0438-S**	0.297	7.55	2.94	13.08	20.87	3.65

FOR INFORMATION ON ALTERNATIVE FINISHES, SEE PAGE 311

Part Numbers with an "*" are squared and not ground. **Part Numbers in bold** represent the newly expanded Associated Spring RAYMOND compression spring offering.

(OD) 0.156 - 0.176

MUSIC WIRE																STAINLESS STEEL						
Catalog #	Outside Diameter (OD)		Wire Diameter (d)		Free Length (L) Approx		Load Length (L_1)		Solid Height (Sh) Approx		Load (P) at L_1		Spring Rate (R)		Catalog #	Load Length (L_1)		Load (P) at L_1		Spring Rate (R)	
	in	mm	in	mm	in	mm	in	mm	in	mm	lb	N	lb/in	N/mm		in	mm	lb	N	lb/in	N/mm
C0156-023-0500-M	**0.156**	**3.96**	**0.023**	**0.58**	**0.500**	**12.70**	**0.319**	**8.09**	**0.239**	**6.08**	**3.92**	**17.45**	**21.63**	**3.79**	**C0156-023-0500-S**	**0.337**	**8.55**	**2.94**	**13.08**	**18.02**	**3.15**
C0156-023-0560-M	**0.156**	**3.96**	**0.023**	**0.58**	**0.560**	**14.22**	**0.353**	**8.98**	**0.266**	**6.75**	**3.92**	**17.45**	**19.00**	**3.33**	**C0156-023-0560-S**	**0.374**	**9.50**	**2.94**	**13.08**	**15.83**	**2.77**
C0156-023-0625-M	**0.156**	**3.96**	**0.023**	**0.58**	**0.625**	**15.88**	**0.394**	**10.00**	**0.292**	**7.41**	**3.92**	**17.45**	**16.96**	**2.97**	**C0156-023-0625-S**	**0.417**	**10.59**	**2.94**	**13.08**	**14.13**	**2.47**
C0156-023-0688-M	**0.156**	**3.96**	**0.023**	**0.58**	**0.688**	**17.48**	**0.431**	**10.96**	**0.318**	**8.09**	**3.92**	**17.45**	**15.29**	**2.68**	**C0156-023-0688-S**	**0.457**	**11.61**	**2.94**	**13.08**	**12.74**	**2.23**
C0156-023-0813-M	**0.156**	**3.96**	**0.023**	**0.58**	**0.813**	**20.65**	**0.506**	**12.86**	**0.371**	**9.42**	**3.92**	**17.45**	**12.80**	**2.24**	**C0156-023-0813-S**	**0.537**	**13.64**	**2.94**	**13.08**	**10.66**	**1.87**
C0156-023-0938-M	**0.156**	**3.96**	**0.023**	**0.58**	**0.938**	**23.83**	**0.582**	**14.77**	**0.423**	**10.75**	**3.92**	**17.45**	**11.01**	**1.93**	**C0156-023-0938-S**	**0.617**	**15.68**	**2.94**	**13.08**	**9.17**	**1.60**
C0156-023-1000-M	**0.156**	**3.96**	**0.023**	**0.58**	**1.000**	**25.40**	**0.619**	**15.71**	**0.450**	**11.42**	**3.92**	**17.45**	**10.29**	**1.80**	**C0156-023-1000-S**	**0.657**	**16.69**	**2.94**	**13.08**	**8.57**	**1.50**
C0156-023-1500-M	**0.156**	**3.96**	**0.023**	**0.58**	**1.500**	**38.10**	**0.919**	**23.33**	**0.660**	**16.77**	**3.92**	**17.45**	**6.75**	**1.18**	**C0156-023-1500-S**	**0.977**	**24.82**	**2.94**	**13.08**	**5.62**	**0.98**
C0156-025-0280-M	**0.156**	**3.96**	**0.025**	**0.64**	**0.280**	**7.11**	**0.200**	**5.09**	**0.158**	**4.02**	**4.93**	**21.94**	**62.00**	**10.85**	**C0156-025-0280-S**	**0.208**	**5.29**	**3.71**	**16.49**	**51.65**	**9.04**
C0156-025-0560-M	**0.156**	**3.96**	**0.025**	**0.64**	**0.560**	**14.22**	**0.363**	**9.21**	**0.315**	**8.00**	**4.93**	**21.94**	**25.00**	**4.38**	**C0156-025-0560-S**	**0.382**	**9.70**	**3.71**	**16.49**	**20.83**	**3.65**
C0156-028-0810-M	**0.156**	**3.96**	**0.028**	**0.71**	**0.810**	**20.57**	**0.555**	**14.09**	**0.535**	**13.59**	**6.64**	**29.52**	**26.00**	**4.55**	**C0156-028-0810-S**	**0.576**	**14.64**	**5.06**	**22.52**	**21.66**	**3.79**
C0156-028-1000-M	**0.156**	**3.96**	**0.028**	**0.71**	**1.000**	**25.40**	**0.708**	**17.99**	**0.597**	**15.17**	**6.71**	**29.84**	**23.00**	**4.03**	**C0156-028-1000-S**	**0.736**	**18.69**	**5.06**	**22.52**	**19.16**	**3.35**
C0156-028-1380-M	**0.156**	**3.96**	**0.028**	**0.71**	**1.380**	**35.05**	**0.961**	**24.40**	**0.833**	**21.16**	**6.71**	**29.84**	**16.00**	**2.80**	**C0156-028-1380-S**	**1.000**	**25.41**	**5.06**	**22.52**	**13.33**	**2.33**
C0156-028-1750-M	**0.156**	**3.96**	**0.028**	**0.71**	**1.750**	**44.45**	**1.234**	**31.34**	**1.012**	**25.70**	**6.71**	**29.84**	**13.00**	**2.28**	**C0156-028-1750-S**	**1.283**	**32.58**	**5.06**	**22.52**	**10.83**	**1.90**
D10800*	0.170	4.32	0.013	0.32	0.343	8.70	0.102	2.60	0.082	2.08	0.69	3.09	2.86	0.50	D20800*	0.102	2.60	0.58	2.57	2.40	0.42
D10810*	0.170	4.32	0.013	0.32	0.516	13.10	0.138	3.50	0.107	2.72	0.69	3.09	1.77	0.31	D20810*	0.138	3.50	0.58	2.57	1.49	0.26
D10820*	0.170	4.32	0.013	0.32	0.780	19.80	0.193	4.90	0.145	3.68	0.69	3.09	1.26	0.22	D20820*	0.193	4.90	0.58	2.57	1.03	0.18
D10830*	0.170	4.32	0.013	0.32	1.126	28.60	0.264	6.70	0.195	4.96	0.69	3.09	0.80	0.14	D20830*	0.264	6.70	0.58	2.57	0.69	0.12
D10840*	0.170	4.32	0.013	0.32	1.650	41.90	0.374	9.50	0.271	6.88	0.69	3.09	0.57	0.10	D20840*	0.374	9.50	0.58	2.57	0.46	0.08
C0172-016-0250-M*	**0.172**	**4.37**	**0.016**	**0.41**	**0.250**	**6.35**	**0.118**	**3.00**	**0.090**	**2.28**	**1.30**	**5.80**	**9.90**	**1.73**	**C0172-016-0250-S***	**0.133**	**3.39**	**0.96**	**4.28**	**8.25**	**1.44**
C0172-016-0310-M*	**0.172**	**4.37**	**0.016**	**0.41**	**0.310**	**7.87**	**0.153**	**3.88**	**0.099**	**2.51**	**1.30**	**5.80**	**8.30**	**1.45**	**C0172-016-0310-S***	**0.171**	**4.34**	**0.96**	**4.28**	**6.91**	**1.21**
C0172-016-0340-M*	**0.172**	**4.37**	**0.016**	**0.41**	**0.340**	**8.64**	**0.146**	**3.71**	**0.118**	**2.99**	**1.20**	**5.34**	**6.20**	**1.09**	**C0172-016-0340-S***	**0.154**	**3.90**	**0.96**	**4.28**	**5.16**	**0.90**
C0172-016-0750-M*	**0.172**	**4.37**	**0.016**	**0.41**	**0.750**	**19.05**	**0.300**	**7.62**	**0.232**	**5.88**	**1.03**	**4.60**	**2.30**	**0.40**	**C0172-016-0750-S***	**0.300**	**7.62**	**0.86**	**3.83**	**1.92**	**0.34**
C0172-016-0780-M*	**0.172**	**4.37**	**0.016**	**0.41**	**0.780**	**19.81**	**0.359**	**9.12**	**0.185**	**4.70**	**1.30**	**5.80**	**3.10**	**0.54**	**C0172-016-0780-S***	**0.407**	**10.35**	**0.96**	**4.28**	**2.58**	**0.45**
C0172-016-0880-M*	**0.172**	**4.37**	**0.016**	**0.41**	**0.880**	**22.35**	**0.360**	**9.15**	**0.282**	**7.16**	**0.94**	**4.16**	**1.80**	**0.32**	**C0172-016-0880-S***	**0.360**	**9.15**	**0.78**	**3.47**	**1.50**	**0.26**
C0172-016-0940-M*	**0.172**	**4.37**	**0.016**	**0.41**	**0.940**	**23.88**	**0.343**	**8.70**	**0.249**	**6.32**	**1.25**	**5.58**	**2.10**	**0.37**	**C0172-016-0940-S***	**0.390**	**9.91**	**0.96**	**4.28**	**1.75**	**0.31**
C0172-016-1250-M*	**0.172**	**4.37**	**0.016**	**0.41**	**1.250**	**31.75**	**0.483**	**12.26**	**0.296**	**7.51**	**1.30**	**5.80**	**1.70**	**0.30**	**C0172-016-1250-S***	**0.571**	**14.50**	**0.96**	**4.28**	**1.42**	**0.25**
C0172-018-0280-M*	**0.172**	**4.37**	**0.018**	**0.46**	**0.280**	**7.11**	**0.140**	**3.55**	**0.121**	**3.06**	**1.68**	**7.49**	**12.00**	**2.10**	**C0172-018-0280-S***	**0.145**	**3.69**	**1.35**	**5.99**	**10.00**	**1.75**
C0172-018-0440-M*	**0.172**	**4.37**	**0.018**	**0.46**	**0.440**	**11.18**	**0.200**	**5.07**	**0.165**	**4.20**	**1.73**	**7.70**	**7.20**	**1.26**	**C0172-018-0440-S***	**0.216**	**5.47**	**1.35**	**5.99**	**6.00**	**1.05**
C0172-018-0500-M*	**0.172**	**4.37**	**0.018**	**0.46**	**0.500**	**12.70**	**0.228**	**5.79**	**0.189**	**4.80**	**1.60**	**7.14**	**5.90**	**1.03**	**C0172-018-0500-S***	**0.228**	**5.79**	**1.34**	**5.95**	**4.91**	**0.86**
C0172-018-0590-M*	**0.172**	**4.37**	**0.018**	**0.46**	**0.590**	**14.99**	**0.256**	**6.50**	**0.207**	**5.25**	**1.74**	**7.73**	**5.20**	**0.91**	**C0172-018-0590-S***	**0.279**	**7.09**	**1.35**	**5.99**	**4.33**	**0.76**
C0172-020-0380-M*	**0.172**	**4.37**	**0.020**	**0.51**	**0.380**	**9.65**	**0.194**	**4.92**	**0.169**	**4.29**	**2.42**	**10.78**	**13.00**	**2.28**	**C0172-020-0380-S***	**0.212**	**5.39**	**1.82**	**8.08**	**10.83**	**1.90**
C0172-020-0440-M*	**0.172**	**4.37**	**0.020**	**0.51**	**0.440**	**11.18**	**0.235**	**5.98**	**0.209**	**5.32**	**1.92**	**8.55**	**9.40**	**1.65**	**C0172-020-0440-S***	**0.235**	**5.98**	**1.60**	**7.12**	**7.83**	**1.37**
C0172-020-0590-M*	**0.172**	**4.37**	**0.020**	**0.51**	**0.590**	**14.99**	**0.293**	**7.44**	**0.231**	**5.86**	**2.44**	**10.84**	**8.20**	**1.44**	**C0172-020-0590-S***	**0.324**	**8.23**	**1.82**	**8.08**	**6.83**	**1.20**
C0172-020-0750-M*	**0.172**	**4.37**	**0.020**	**0.51**	**0.750**	**19.05**	**0.366**	**9.29**	**0.313**	**7.95**	**2.11**	**9.40**	**5.50**	**0.96**	**C0172-020-0750-S***	**0.366**	**9.29**	**1.76**	**7.83**	**4.58**	**0.80**
C0172-020-1130-M*	**0.172**	**4.37**	**0.020**	**0.51**	**1.130**	**28.70**	**0.536**	**13.61**	**0.398**	**10.12**	**2.44**	**10.84**	**4.10**	**0.72**	**C0172-020-1130-S***	**0.598**	**15.20**	**1.82**	**8.08**	**3.42**	**0.60**
C0172-022-0500-M	**0.172**	**4.37**	**0.022**	**0.56**	**0.500**	**12.70**	**0.282**	**7.16**	**0.256**	**6.50**	**2.40**	**10.67**	**11.00**	**1.93**	**C0172-022-0500-S**	**0.282**	**7.16**	**2.00**	**8.88**	**9.16**	**1.60**
C0172-022-0720-M	**0.172**	**4.37**	**0.022**	**0.56**	**0.720**	**18.29**	**0.376**	**9.54**	**0.331**	**8.40**	**2.79**	**12.40**	**8.10**	**1.42**	**C0172-022-0720-S**	**0.376**	**9.54**	**2.32**	**10.33**	**6.75**	**1.18**
C0172-022-0880-M	**0.172**	**4.37**	**0.022**	**0.56**	**0.880**	**22.35**	**0.486**	**12.34**	**0.437**	**11.10**	**2.33**	**10.35**	**5.90**	**1.03**	**C0172-022-0880-S**	**0.486**	**12.34**	**1.94**	**8.62**	**4.91**	**0.86**
C0172-025-0450-M	**0.172**	**4.37**	**0.025**	**0.64**	**0.450**	**11.43**	**0.281**	**7.13**	**0.263**	**6.69**	**3.72**	**16.56**	**22.00**	**3.85**	**C0172-025-0450-S**	**0.281**	**7.13**	**3.10**	**13.80**	**18.33**	**3.21**
C0172-025-0630-M	**0.172**	**4.37**	**0.025**	**0.64**	**0.630**	**16.00**	**0.405**	**10.30**	**0.384**	**9.75**	**3.15**	**13.99**	**14.00**	**2.45**	**C0172-025-0630-S**	**0.405**	**10.30**	**2.62**	**11.66**	**11.66**	**2.04**
C0172-025-0720-M	**0.172**	**4.37**	**0.025**	**0.64**	**0.720**	**18.29**	**0.454**	**11.53**	**0.325**	**8.27**	**4.52**	**20.11**	**17.00**	**2.98**	**C0172-025-0720-S**	**0.480**	**12.19**	**3.40**	**15.12**	**14.16**	**2.48**
C0172-025-1220-M	**0.172**	**4.37**	**0.025**	**0.64**	**1.220**	**30.99**	**0.739**	**18.77**	**0.546**	**13.87**	**4.52**	**20.11**	**9.40**	**1.65**	**C0172-025-1220-S**	**0.786**	**19.97**	**3.40**	**15.12**	**7.83**	**1.37**
C0172-025-1250-M	**0.172**	**4.37**	**0.025**	**0.64**	**1.250**	**31.75**	**0.764**	**19.40**	**0.551**	**14.01**	**4.52**	**20.11**	**9.30**	**1.63**	**C0172-025-1250-S**	**0.811**	**20.61**	**3.40**	**15.12**	**7.75**	**1.36**
C0172-025-1560-M	**0.172**	**4.37**	**0.025**	**0.64**	**1.560**	**39.62**	**0.913**	**23.19**	**0.839**	**21.31**	**3.82**	**16.98**	**5.90**	**1.03**	**C0172-025-1560-S**	**0.913**	**23.19**	**3.18**	**14.14**	**4.91**	**0.86**
C0172-026-0560-M	**0.172**	**4.37**	**0.026**	**0.66**	**0.560**	**14.22**	**0.366**	**9.31**	**0.276**	**7.02**	**5.03**	**22.39**	**26.00**	**4.55**	**C0172-026-0560-S**	**0.385**	**9.78**	**3.79**	**16.86**	**21.66**	**3.79**
C0172-026-0630-M	**0.172**	**4.37**	**0.026**	**0.66**	**0.630**	**16.00**	**0.411**	**10.44**	**0.305**	**7.75**	**5.03**	**22.39**	**23.00**	**4.03**	**C0172-026-0630-S**	**0.432**	**10.98**	**3.79**	**16.86**	**19.16**	**3.35**
C0172-026-1000-M	**0.172**	**4.37**	**0.026**	**0.66**	**1.000**	**25.40**	**0.613**	**15.56**	**0.498**	**12.65**	**5.03**	**22.39**	**13.00**	**2.28**	**C0172-026-1000-S**	**0.650**	**16.51**	**3.79**	**16.86**	**10.83**	**1.90**
C0172-030-0470-M	**0.172**	**4.37**	**0.030**	**0.76**	**0.470**	**11.94**	**0.325**	**8.25**	**0.314**	**7.98**	**7.40**	**32.93**	**51.00**	**8.93**	**C0172-030-0470-S**	**0.338**	**8.58**	**5.62**	**25.00**	**42.48**	**7.43**
C0172-030-0500-M	**0.172**	**4.37**	**0.030**	**0.76**	**0.500**	**12.70**	**0.362**	**9.20**	**0.300**	**7.63**	**7.43**	**33.07**	**54.00**	**9.45**	**C0172-030-0500-S**	**0.375**	**9.53**	**5.62**	**25.00**	**44.98**	**7.87**
D11000*	0.173	4.40	0.016	0.40	0.295	7.50	0.118	3.00	0.102	2.60	1.18	5.25	6.69	1.17	D21000*	0.118	3.00	0.98	4.37	5.54	0.97
D11010*	0.173	4.40	0.016	0.40	0.433	11.00	0.161	4.10	0.134	3.40	1.18	5.25	4.23	0.74	D21010*	0.161	4.10	0.98	4.37	3.54	0.62
D11020*	0.173	4.40	0.016	0.40	0.650	16.50	0.228	5.80	0.181	4.60	1.18	5.25	2.74	0.48	D21020*	0.228	5.80	0.98	4.37	2.29	0.40
D11030*	0.173	4.40	0.016	0.40	0.945	24.00	0.315	8.00	0.244	6.20	1.18	5.25	1.83	0.32	D21030*	0.315	8.00	0.98	4.37	1.54	0.27
D11040*	0.173	4.40	0.016	0.40	1.398	35.50	0.449	11.40	0.339	8.60	1.18	5.25	1.26	0.22	D21040*	0.449	11.40	0.98	4.37	1.03	0.18
C0176-016-0375-M*	**0.176**	**4.47**	**0.016**	**0.41**	**0.375**	**9.53**	**0.154**	**3.91**	**0.120**	**3.06**	**1.22**	**5.43**	**5.52**	**0.97**	**C0176-016-0375-S***	**0.179**	**4.54**	**0.94**	**4.19**	**4.80**	**0.84**
C0176-016-0438-M*	**0.176**	**4.47**	**0.016**	**0.41**	**0.438**	**11.11**	**0.174**	**4.42**	**0.134**	**3.40**	**1.22**	**5.43**	**4.63**	**0.81**	**C0176-016-0438-S***	**0.204**	**5.18**	**0.94**	**4.19**	**4.03**	**0.71**
C0176-016-0500-M*	**0.176**	**4.47**	**0.016**	**0.41**	**0.500**	**12.70**	**0.194**	**4.93**	**0.147**	**3.74**	**1.22**	**5.43**	**3.99**	**0.70**	**C0176-016-0500-S***	**0.229**	**5.81**	**0.94**	**4.19**	**3.47**	**0.61**
C0176-016-0563-M*	**0.176**	**4.47**	**0.016**	**0.41**	**0.563**	**14.29**	**0.214**	**5.45**	**0.161**	**4.08**	**1.22**	**5.43**	**3.51**	**0.61**	**C0176-016-0563-S***	**0.254**	**6.45**	**0.94**	**4.19**	**3.05**	**0.53**
C0176-016-0625-M*	**0.176**	**4.47**	**0.016**	**0.41**	**0.625**	**15.88**	**0.235**	**5.96**	**0.174**	**4.42**	**1.22**	**5.43**	**3.13**	**0.55**	**C0176-016-0625-S***	**0.279**	**7.08**	**0.94**	**4.19**	**2.72**	**0.48**
C0176-016-0688-M*	**0.176**	**4.47**	**0.016**	**0.41**	**0.688**	**17.46**	**0.255**	**6.47**	**0.187**	**4.76**	**1.22**	**5.43**	**2.82**	**0.49**	**C0176-016-0688-S***	**0.304**	**7.72**	**0.94**	**4.19**	**2.45**	**0.43**
C0176-016-0750-M*	**0.176**	**4.47**	**0.016**	**0.41**	**0.750**	**19.05**	**0.275**	**6.99**	**0.201**	**5.10**	**1.22**	**5.43**	**2.57**	**0.45**	**C0176-016-0750-S***	**0.329**	**8.35**	**0.94**	**4.19**	**2.23**	**0.39**
C0176-016-0813-M*	**0.176**	**4.47**	**0.016**	**0.41**	**0.813**	**20.64**	**0.295**	**7.50**	**0.214**	**5.44**	**1.22**	**5.43**	**2.36**	**0.41**	**C0176-016-0813-S***	**0.354**	**8.99**	**0.94**	**4.19**	**2.05**	**0.36**
C0176-016-0875-M*	**0.176**	**4.47**	**0.016**	**0.41**	**0.875**	**22.23**	**0.315**	**8.01**	**0.228**	**5.78**	**1.22**	**5.43**	**2.18**	**0.38**	**C0176-016-0875-S***	**0.379**	**9.62**	**0.94**	**4.19**	**1.90**	**0.33**

Part Numbers with an "*" are squared and not ground. **Part Numbers in bold** represent the newly expanded Associated Spring RAYMOND compression spring offering.

MUSIC WIRE															STAINLESS STEEL						
Catalog #	Outside Diameter (OD)		Wire Diameter (d)		Free Length (L) Approx		Load Length (L_1)		Solid Height (Sh) Approx		Load (P) at L_1		Spring Rate (R)		Catalog #	Load Length (L_1)		Load (P) at L_1		Spring Rate (R)	
	in	mm	in	mm	in	mm	in	mm	in	mm	lb	N	lb/in	N/mm		in	mm	lb	N	lb/in	N/mm
C0176-016-0938-M*	0.176	4.47	0.016	0.41	0.938	23.81	0.336	8.53	0.241	6.12	1.22	5.43	2.03	0.35	**C0176-016-0938-S***	0.404	10.25	0.94	4.19	1.76	0.31
C0176-016-1000-M*	0.176	4.47	0.016	0.41	1.000	25.40	0.356	9.04	0.254	6.46	1.22	5.43	1.90	0.33	**C0176-016-1000-S***	0.429	10.89	0.94	4.19	1.65	0.29
C0176-016-1125-M*	0.176	4.47	0.016	0.41	1.125	28.58	0.396	10.07	0.281	7.14	1.22	5.43	1.68	0.29	**C0176-016-1125-S***	0.479	12.16	0.94	4.19	1.46	0.26
C0176-016-1250-M*	0.176	4.47	0.016	0.41	1.250	31.75	0.437	11.09	0.308	7.82	1.22	5.43	1.50	0.26	**C0176-016-1250-S***	0.529	13.43	0.94	4.19	1.30	0.23
C0176-016-1375-M*	0.176	4.47	0.016	0.41	1.375	34.93	0.477	12.12	0.335	8.50	1.22	5.43	1.36	0.24	**C0176-016-1375-S***	0.579	14.70	0.94	4.19	1.18	0.21
C0176-016-1500-M*	0.176	4.47	0.016	0.41	1.500	38.10	0.518	13.15	0.361	9.18	1.22	5.43	1.24	0.22	**C0176-016-1500-S***	0.629	15.97	0.94	4.19	1.08	0.19
C0176-016-1625-M*	0.176	4.47	0.016	0.41	1.625	41.28	0.558	14.17	0.388	9.86	1.22	5.43	1.14	0.20	**C0176-016-1625-S***	0.679	17.24	0.94	4.19	0.99	0.17
C0176-016-1750-M*	0.176	4.47	0.016	0.41	1.750	44.45	0.598	15.20	0.415	10.54	1.22	5.43	1.06	0.19	**C0176-016-1750-S***	0.729	18.51	0.94	4.19	0.92	0.16
C0176-016-1875-M*	0.176	4.47	0.016	0.41	1.875	47.63	0.639	16.23	0.442	11.22	1.22	5.43	0.99	0.17	**C0176-016-1875-S***	0.779	19.78	0.94	4.19	0.86	0.15
C0176-016-2000-M*	0.176	4.47	0.016	0.41	2.000	50.80	0.679	17.25	0.469	11.90	1.22	5.43	0.92	0.16	**C0176-016-2000-S***	0.829	21.05	0.94	4.19	0.80	0.14
C0176-016-2125-M*	0.176	4.47	0.016	0.41	2.125	53.98	0.720	18.28	0.495	12.58	1.22	5.43	0.87	0.15	**C0176-016-2125-S***	0.879	22.32	0.94	4.19	0.76	0.13
C0176-016-2250-M*	0.176	4.47	0.016	0.41	2.250	57.15	0.760	19.31	0.522	13.26	1.22	5.43	0.82	0.14	**C0176-016-2250-S***	0.929	23.59	0.94	4.19	0.71	0.12
C0176-016-2375-M*	0.176	4.47	0.016	0.41	2.375	60.33	0.801	20.34	0.549	13.94	1.22	5.43	0.78	0.14	**C0176-016-2375-S***	0.979	24.86	0.94	4.19	0.67	0.12
C0176-016-2500-M*	0.176	4.47	0.016	0.41	2.500	63.50	0.841	21.36	0.576	14.62	1.22	5.43	0.74	0.13	**C0176-016-2500-S***	1.029	26.13	0.94	4.19	0.64	0.11
C0176-016-2625-M*	0.176	4.47	0.016	0.41	2.625	66.68	0.881	22.39	0.602	15.30	1.22	5.43	0.70	0.12	**C0176-016-2625-S***	1.079	27.40	0.94	4.19	0.61	0.11
C0176-016-2750-M*	0.176	4.47	0.016	0.41	2.750	69.85	0.922	23.42	0.629	15.98	1.22	5.43	0.67	0.12	**C0176-016-2750-S***	1.129	28.67	0.94	4.19	0.58	0.10
C0176-016-2875-M*	0.176	4.47	0.016	0.41	2.875	73.03	0.962	24.44	0.656	16.66	1.22	5.43	0.64	0.11	**C0176-016-2875-S***	1.179	29.94	0.94	4.19	0.55	0.10
C0176-016-3000-M*	0.176	4.47	0.016	0.41	3.000	76.20	1.003	25.47	0.683	17.34	1.22	5.43	0.61	0.11	**C0176-016-3000-S***	1.229	31.21	0.94	4.19	0.53	0.09
C0176-018-0375-M*	0.176	4.47	0.018	0.46	0.375	9.53	0.172	4.37	0.143	3.63	1.70	7.56	8.37	1.46	**C0176-018-0375-S***	0.194	4.93	1.32	5.86	7.28	1.27
C0176-018-0438-M*	0.176	4.47	0.018	0.46	0.438	11.11	0.195	4.95	0.160	4.06	1.70	7.56	7.01	1.23	**C0176-018-0438-S***	0.221	5.62	1.32	5.86	6.09	1.07
C0176-018-0500-M*	0.176	4.47	0.018	0.46	0.500	12.70	0.218	5.54	0.177	4.49	1.70	7.56	6.03	1.05	**C0176-018-0500-S***	0.249	6.31	1.32	5.86	5.24	0.92
C0176-018-0563-M*	0.176	4.47	0.018	0.46	0.563	14.29	0.241	6.12	0.194	4.92	1.70	7.56	5.29	0.92	**C0176-018-0563-S***	0.276	7.00	1.32	5.86	4.60	0.81
C0176-018-0625-M*	0.176	4.47	0.018	0.46	0.625	15.88	0.264	6.71	0.210	5.34	1.70	7.56	4.71	0.82	**C0176-018-0625-S***	0.303	7.70	1.32	5.86	4.09	0.72
C0176-018-0688-M*	0.176	4.47	0.018	0.46	0.688	17.46	0.287	7.29	0.227	5.77	1.70	7.56	4.24	0.74	**C0176-018-0688-S***	0.330	8.39	1.32	5.86	3.69	0.65
C0176-018-0750-M*	0.176	4.47	0.018	0.46	0.750	19.05	0.310	7.87	0.244	6.20	1.70	7.56	3.86	0.68	**C0176-018-0750-S***	0.358	9.08	1.32	5.86	3.36	0.59
C0176-018-0813-M*	0.176	4.47	0.018	0.46	0.813	20.64	0.333	8.46	0.261	6.62	1.70	7.56	3.54	0.62	**C0176-018-0813-S***	0.385	9.77	1.32	5.86	3.08	0.54
C0176-018-0875-M*	0.176	4.47	0.018	0.46	0.875	22.23	0.356	9.04	0.278	7.05	1.70	7.56	3.27	0.57	**C0176-018-0875-S***	0.412	10.47	1.32	5.86	2.85	0.50
C0176-018-0938-M*	0.176	4.47	0.018	0.46	0.938	23.81	0.379	9.63	0.294	7.48	1.70	7.56	3.04	0.53	**C0176-018-0938-S***	0.439	11.16	1.32	5.86	2.64	0.46
C0176-018-1000-M*	0.176	4.47	0.018	0.46	1.000	25.40	0.402	10.21	0.311	7.91	1.70	7.56	2.84	0.50	**C0176-018-1000-S***	0.467	11.85	1.32	5.86	2.47	0.43
C0176-018-1125-M*	0.176	4.47	0.018	0.46	1.125	28.58	0.448	11.38	0.345	8.76	1.70	7.56	2.51	0.44	**C0176-018-1125-S***	0.521	13.24	1.32	5.86	2.18	0.38
C0176-018-1250-M*	0.176	4.47	0.018	0.46	1.250	31.75	0.494	12.55	0.379	9.61	1.70	7.56	2.25	0.39	**C0176-018-1250-S***	0.576	14.62	1.32	5.86	1.95	0.34
C0176-018-1375-M*	0.176	4.47	0.018	0.46	1.375	34.93	0.540	13.71	0.412	10.47	1.70	7.56	2.03	0.36	**C0176-018-1375-S***	0.630	16.01	1.32	5.86	1.77	0.31
C0176-018-1500-M*	0.176	4.47	0.018	0.46	1.500	38.10	0.586	14.88	0.446	11.32	1.70	7.56	1.86	0.33	**C0176-018-1500-S***	0.685	17.39	1.32	5.86	1.62	0.28
C0176-018-1625-M*	0.176	4.47	0.018	0.46	1.625	41.28	0.632	16.05	0.479	12.18	1.70	7.56	1.71	0.30	**C0176-018-1625-S***	0.739	18.78	1.32	5.86	1.49	0.26
C0176-018-1750-M*	0.176	4.47	0.018	0.46	1.750	44.45	0.678	17.22	0.513	13.03	1.70	7.56	1.58	0.28	**C0176-018-1750-S***	0.794	20.16	1.32	5.86	1.38	0.24
C0176-018-1875-M*	0.176	4.47	0.018	0.46	1.875	47.63	0.724	18.39	0.547	13.89	1.70	7.56	1.48	0.26	**C0176-018-1875-S***	0.848	21.54	1.32	5.86	1.28	0.22
C0176-018-2000-M*	0.176	4.47	0.018	0.46	2.000	50.80	0.770	19.55	0.580	14.74	1.70	7.56	1.38	0.24	**C0176-018-2000-S***	0.903	22.93	1.32	5.86	1.20	0.21
C0176-018-2125-M*	0.176	4.47	0.018	0.46	2.125	53.98	0.816	20.72	0.614	15.60	1.70	7.56	1.30	0.23	**C0176-018-2125-S***	0.957	24.31	1.32	5.86	1.13	0.20
C0176-018-2250-M*	0.176	4.47	0.018	0.46	2.250	57.15	0.862	21.89	0.648	16.45	1.70	7.56	1.22	0.21	**C0176-018-2250-S***	1.012	25.70	1.32	5.86	1.06	0.19
C0176-018-2375-M*	0.176	4.47	0.018	0.46	2.375	60.33	0.908	23.06	0.681	17.30	1.70	7.56	1.16	0.20	**C0176-018-2375-S***	1.066	27.08	1.32	5.86	1.01	0.18
C0176-018-2500-M*	0.176	4.47	0.018	0.46	2.500	63.50	0.954	24.22	0.715	18.16	1.70	7.56	1.10	0.19	**C0176-018-2500-S***	1.121	28.47	1.32	5.86	0.96	0.17
C0176-018-2625-M*	0.176	4.47	0.018	0.46	2.625	66.68	1.000	25.39	0.749	19.01	1.70	7.56	1.05	0.18	**C0176-018-2625-S***	1.175	29.85	1.32	5.86	0.91	0.16
C0176-018-2750-M*	0.176	4.47	0.018	0.46	2.750	69.85	1.046	26.56	0.782	19.87	1.70	7.56	1.00	0.17	**C0176-018-2750-S***	1.230	31.24	1.32	5.86	0.87	0.15
C0176-018-2875-M*	0.176	4.47	0.018	0.46	2.875	73.03	1.092	27.73	0.816	20.72	1.70	7.56	0.95	0.17	**C0176-018-2875-S***	1.284	32.62	1.32	5.86	0.83	0.15
C0176-018-3000-M*	0.176	4.47	0.018	0.46	3.000	76.20	1.138	28.90	0.849	21.58	1.70	7.56	0.91	0.16	**C0176-018-3000-S***	1.339	34.01	1.32	5.86	0.79	0.14
C0176-020-0313-M*	0.176	4.47	0.020	0.51	0.313	7.94	0.165	4.18	0.145	3.69	2.28	10.15	15.43	2.70	**C0176-020-0313-S***	0.180	4.57	1.78	7.91	13.41	2.35
C0176-020-0375-M*	0.176	4.47	0.020	0.51	0.375	9.53	0.191	4.84	0.166	4.21	2.28	10.14	12.36	2.16	**C0176-020-0375-S***	0.210	5.33	1.78	7.91	10.75	1.88
C0176-020-0438-M*	0.176	4.47	0.020	0.51	0.438	11.11	0.216	5.50	0.186	4.73	2.28	10.14	10.32	1.81	**C0176-020-0438-S***	0.239	6.08	1.78	7.91	8.97	1.57
C0176-020-0500-M*	0.176	4.47	0.020	0.51	0.500	12.70	0.242	6.16	0.207	5.25	2.28	10.14	8.85	1.55	**C0176-020-0500-S***	0.269	6.84	1.78	7.91	7.70	1.35
C0176-020-0563-M*	0.176	4.47	0.020	0.51	0.563	14.29	0.268	6.81	0.227	5.77	2.28	10.14	7.75	1.36	**C0176-020-0563-S***	0.299	7.59	1.78	7.91	6.74	1.18
C0176-020-0625-M*	0.176	4.47	0.020	0.51	0.625	15.88	0.294	7.47	0.248	6.29	2.28	10.14	6.89	1.21	**C0176-020-0625-S***	0.329	8.34	1.78	7.91	5.99	1.05
C0176-020-0688-M*	0.176	4.47	0.020	0.51	0.688	17.46	0.320	8.13	0.268	6.81	2.28	10.14	6.21	1.09	**C0176-020-0688-S***	0.358	9.10	1.78	7.91	5.40	0.95
C0176-020-0750-M*	0.176	4.47	0.020	0.51	0.750	19.05	0.346	8.79	0.288	7.33	2.28	10.14	5.65	0.99	**C0176-020-0750-S***	0.388	9.85	1.78	7.91	4.91	0.86
C0176-020-0813-M*	0.176	4.47	0.020	0.51	0.813	20.64	0.372	9.45	0.309	7.84	2.28	10.14	5.18	0.91	**C0176-020-0813-S***	0.418	10.61	1.78	7.91	4.50	0.79
C0176-020-0875-M*	0.176	4.47	0.020	0.51	0.875	22.23	0.398	10.10	0.329	8.36	2.28	10.14	4.78	0.84	**C0176-020-0875-S***	0.447	11.36	1.78	7.91	4.16	0.73
C0176-020-0938-M*	0.176	4.47	0.020	0.51	0.938	23.81	0.424	10.76	0.350	8.88	2.28	10.14	4.44	0.78	**C0176-020-0938-S***	0.477	12.12	1.78	7.91	3.86	0.68
C0176-020-1000-M*	0.176	4.47	0.020	0.51	1.000	25.40	0.450	11.42	0.370	9.40	2.28	10.14	4.14	0.73	**C0176-020-1000-S***	0.507	12.87	1.78	7.91	3.60	0.63
C0176-020-1125-M*	0.176	4.47	0.020	0.51	1.125	28.58	0.501	12.74	0.411	10.44	2.28	10.14	3.66	0.64	**C0176-020-1125-S***	0.566	14.38	1.78	7.91	3.18	0.56
C0176-020-1250-M*	0.176	4.47	0.020	0.51	1.250	31.75	0.553	14.05	0.452	11.47	2.28	10.14	3.27	0.57	**C0176-020-1250-S***	0.626	15.89	1.78	7.91	2.85	0.50
C0176-020-1375-M*	0.176	4.47	0.020	0.51	1.375	34.93	0.605	15.37	0.493	12.51	2.28	10.14	2.96	0.52	**C0176-020-1375-S***	0.685	17.40	1.78	7.91	2.58	0.45
C0176-020-1500-M*	0.176	4.47	0.020	0.51	1.500	38.10	0.657	16.68	0.533	13.55	2.28	10.14	2.71	0.47	**C0176-020-1500-S***	0.744	18.91	1.78	7.91	2.35	0.41
C0176-020-1625-M*	0.176	4.47	0.020	0.51	1.625	41.28	0.709	18.00	0.574	14.59	2.28	10.14	2.49	0.44	**C0176-020-1625-S***	0.804	20.42	1.78	7.91	2.16	0.38
C0176-020-1750-M*	0.176	4.47	0.020	0.51	1.750	44.45	0.760	19.31	0.615	15.62	2.28	10.14	2.31	0.40	**C0176-020-1750-S***	0.863	21.92	1.78	7.91	2.00	0.35
C0176-020-1875-M*	0.176	4.47	0.020	0.51	1.875	47.63	0.812	20.63	0.656	16.66	2.28	10.14	2.15	0.38	**C0176-020-1875-S***	0.923	23.43	1.78	7.91	1.87	0.33

FOR INFORMATION ON ALTERNATIVE FINISHES, SEE PAGE 311

Part Numbers with an "*" are squared and not ground. **Part Numbers in bold** represent the newly expanded Associated Spring RAYMOND compression spring offering.

(OD) 0.176 - 0.176

MUSIC WIRE															STAINLESS STEEL						
Catalog #	Outside Diameter (OD)		Wire Diameter (d)		Free Length (L) Approx		Load Length (L_1)		Solid Height (Sh) Approx		Load (P) at L_1		Spring Rate (R)		Catalog #	Load Length (L_1)		Load (P) at L_1		Spring Rate (R)	
	in	mm	in	mm	in	mm	in	mm	in	mm	lb	N	lb/in	N/mm		in	mm	lb	N	lb/in	N/mm
C0176-020-2000-M*	0.176	4.47	0.020	0.51	2.000	50.80	0.864	21.95	0.697	17.70	2.28	10.14	2.01	0.35	C0176-020-2000-S*	0.982	24.94	1.78	7.91	1.75	0.31
C0176-020-2125-M*	0.176	4.47	0.020	0.51	2.125	53.98	0.916	23.26	0.738	18.73	2.28	10.14	1.89	0.33	C0176-020-2125-S*	1.041	26.45	1.78	7.91	1.64	0.29
C0176-020-2250-M*	0.176	4.47	0.020	0.51	2.250	57.15	0.968	24.58	0.778	19.77	2.28	10.14	1.78	0.31	C0176-020-2250-S*	1.101	27.96	1.78	7.91	1.55	0.27
C0176-020-2375-M*	0.176	4.47	0.020	0.51	2.375	60.33	1.019	25.89	0.819	20.81	2.28	10.14	1.68	0.29	C0176-020-2375-S*	1.160	29.47	1.78	7.91	1.46	0.26
C0176-020-2500-M*	0.176	4.47	0.020	0.51	2.500	63.50	1.071	27.21	0.860	21.85	2.28	10.14	1.60	0.28	C0176-020-2500-S*	1.220	30.98	1.78	7.91	1.39	0.24
C0176-020-2625-M*	0.176	4.47	0.020	0.51	2.625	66.68	1.123	28.53	0.901	22.88	2.28	10.14	1.52	0.27	C0176-020-2625-S*	1.279	32.49	1.78	7.91	1.32	0.23
C0176-020-2750-M*	0.176	4.47	0.020	0.51	2.750	69.85	1.175	29.84	0.942	23.92	2.28	10.14	1.45	0.25	C0176-020-2750-S*	1.338	34.00	1.78	7.91	1.26	0.22
C0176-020-2875-M*	0.176	4.47	0.020	0.51	2.875	73.03	1.227	31.16	0.983	24.96	2.28	10.14	1.38	0.24	C0176-020-2875-S*	1.398	35.50	1.78	7.91	1.20	0.21
C0176-020-3000-M*	0.176	4.47	0.020	0.51	3.000	76.20	1.278	32.47	1.023	25.99	2.28	10.14	1.33	0.23	C0176-020-3000-S*	1.457	37.01	1.78	7.91	1.15	0.20
C0176-021-0313-M	0.176	4.47	0.021	0.53	0.313	7.94	0.161	4.08	0.140	3.57	2.61	11.62	17.19	3.01	C0176-021-0313-S	0.176	4.47	2.04	9.07	14.95	2.62
C0176-021-0375-M	0.176	4.47	0.021	0.53	0.375	9.53	0.188	4.77	0.163	4.13	2.61	11.62	13.97	2.44	C0176-021-0375-S	0.207	5.26	2.04	9.07	12.14	2.12
C0176-021-0438-M	0.176	4.47	0.021	0.53	0.438	11.11	0.215	5.47	0.185	4.70	2.61	11.62	11.76	2.06	C0176-021-0438-S	0.238	6.04	2.04	9.07	10.22	1.79
C0176-021-0500-M	0.176	4.47	0.021	0.53	0.500	12.70	0.243	6.16	0.207	5.26	2.61	11.62	10.15	1.78	C0176-021-0500-S	0.269	6.83	2.04	9.07	8.83	1.55
C0176-021-0563-M	0.176	4.47	0.021	0.53	0.563	14.29	0.270	6.86	0.229	5.83	2.61	11.62	8.93	1.56	C0176-021-0563-S	0.300	7.62	2.04	9.07	7.77	1.36
C0176-021-0625-M	0.176	4.47	0.021	0.53	0.625	15.88	0.297	7.56	0.252	6.39	2.61	11.62	7.98	1.40	C0176-021-0625-S	0.331	8.40	2.04	9.07	6.94	1.21
C0176-021-0688-M	0.176	4.47	0.021	0.53	0.688	17.46	0.325	8.25	0.274	6.96	2.61	11.62	7.20	1.26	C0176-021-0688-S	0.362	9.19	2.04	9.07	6.26	1.10
C0176-021-0750-M	0.176	4.47	0.021	0.53	0.750	19.05	0.352	8.95	0.296	7.52	2.61	11.62	6.57	1.15	C0176-021-0750-S	0.393	9.98	2.04	9.07	5.71	1.00
C0176-021-0813-M	0.176	4.47	0.021	0.53	0.813	20.64	0.380	9.64	0.318	8.09	2.61	11.62	6.04	1.06	C0176-021-0813-S	0.424	10.76	2.04	9.07	5.25	0.92
C0176-021-0875-M	0.176	4.47	0.021	0.53	0.875	22.23	0.407	10.34	0.341	8.65	2.61	11.62	5.58	0.98	C0176-021-0875-S	0.455	11.55	2.04	9.07	4.85	0.85
C0176-021-0938-M	0.176	4.47	0.021	0.53	0.938	23.81	0.434	11.03	0.363	9.22	2.61	11.62	5.19	0.91	C0176-021-0938-S	0.486	12.34	2.04	9.07	4.52	0.79
C0176-021-1000-M	0.176	4.47	0.021	0.53	1.000	25.40	0.462	11.73	0.385	9.78	2.61	11.62	4.85	0.85	C0176-021-1000-S	0.517	13.12	2.04	9.07	4.22	0.74
C0176-021-1125-M	0.176	4.47	0.021	0.53	1.125	28.58	0.517	13.12	0.430	10.91	2.61	11.62	4.29	0.75	C0176-021-1125-S	0.579	14.70	2.04	9.07	3.73	0.65
C0176-021-1250-M	0.176	4.47	0.021	0.53	1.250	31.75	0.571	14.51	0.474	12.04	2.61	11.62	3.85	0.67	C0176-021-1250-S	0.641	16.27	2.04	9.07	3.35	0.59
C0176-021-1375-M	0.176	4.47	0.021	0.53	1.375	34.93	0.626	15.90	0.519	13.17	2.61	11.62	3.49	0.61	C0176-021-1375-S	0.702	17.84	2.04	9.07	3.03	0.53
C0176-021-1500-M	0.176	4.47	0.021	0.53	1.500	38.10	0.681	17.29	0.563	14.30	2.61	11.62	3.19	0.56	C0176-021-1500-S	0.764	19.42	2.04	9.07	2.77	0.48
C0176-021-1625-M	0.176	4.47	0.021	0.53	1.625	41.28	0.736	18.69	0.608	15.43	2.61	11.62	2.94	0.51	C0176-021-1625-S	0.826	20.99	2.04	9.07	2.55	0.45
C0176-021-1750-M	0.176	4.47	0.021	0.53	1.750	44.45	0.790	20.08	0.652	16.56	2.61	11.62	2.72	0.48	C0176-021-1750-S	0.888	22.56	2.04	9.07	2.37	0.41
C0176-021-1875-M	0.176	4.47	0.021	0.53	1.875	47.63	0.845	21.47	0.697	17.69	2.61	11.62	2.54	0.44	C0176-021-1875-S	0.950	24.14	2.04	9.07	2.21	0.39
C0176-021-2000-M	0.176	4.47	0.021	0.53	2.000	50.80	0.900	22.86	0.741	18.82	2.61	11.62	2.38	0.42	C0176-021-2000-S	1.012	25.71	2.04	9.07	2.07	0.36
C0176-021-2125-M	0.176	4.47	0.021	0.53	2.125	53.98	0.955	24.25	0.786	19.95	2.61	11.62	2.23	0.39	C0176-021-2125-S	1.074	27.28	2.04	9.07	1.94	0.34
C0176-021-2250-M	0.176	4.47	0.021	0.53	2.250	57.15	1.009	25.64	0.830	21.08	2.61	11.62	2.11	0.37	C0176-021-2250-S	1.136	28.85	2.04	9.07	1.83	0.32
C0176-021-2375-M	0.176	4.47	0.021	0.53	2.375	60.33	1.064	27.03	0.875	22.21	2.61	11.62	1.99	0.35	C0176-021-2375-S	1.198	30.43	2.04	9.07	1.73	0.30
C0176-021-2500-M	0.176	4.47	0.021	0.53	2.500	63.50	1.119	28.42	0.919	23.35	2.61	11.62	1.89	0.33	C0176-021-2500-S	1.260	32.00	2.04	9.07	1.65	0.29
C0176-021-2625-M	0.176	4.47	0.021	0.53	2.625	66.68	1.174	29.81	0.964	24.48	2.61	11.62	1.80	0.32	C0176-021-2625-S	1.322	33.57	2.04	9.07	1.57	0.27
C0176-021-2750-M	0.176	4.47	0.021	0.53	2.750	69.85	1.229	31.21	1.008	25.61	2.61	11.62	1.72	0.30	C0176-021-2750-S	1.384	35.15	2.04	9.07	1.49	0.26
C0176-021-2875-M	0.176	4.47	0.021	0.53	2.875	73.03	1.283	32.60	1.053	26.74	2.61	11.62	1.64	0.29	C0176-021-2875-S	1.446	36.72	2.04	9.07	1.43	0.25
C0176-021-3000-M	0.176	4.47	0.021	0.53	3.000	76.20	1.338	33.99	1.097	27.87	2.61	11.62	1.57	0.28	C0176-021-3000-S	1.508	38.29	2.04	9.07	1.37	0.24
C0176-022-0313-M	0.176	4.47	0.022	0.56	0.313	7.94	0.168	4.27	0.150	3.80	2.97	13.23	20.58	3.60	C0176-022-0313-S	0.183	4.64	2.33	10.35	17.90	3.13
C0176-022-0375-M	0.176	4.47	0.022	0.56	0.375	9.53	0.197	5.00	0.174	4.41	2.97	13.23	16.70	2.92	C0176-022-0375-S	0.215	5.46	2.33	10.35	14.52	2.54
C0176-022-0438-M	0.176	4.47	0.022	0.56	0.438	11.11	0.226	5.74	0.198	5.03	2.97	13.23	14.04	2.46	C0176-022-0438-S	0.247	6.27	2.33	10.35	12.21	2.14
C0176-022-0500-M	0.176	4.47	0.022	0.56	0.500	12.70	0.255	6.47	0.222	5.64	2.97	13.23	12.12	2.12	C0176-022-0500-S	0.279	7.09	2.33	10.35	10.54	1.84
C0176-022-0563-M	0.176	4.47	0.022	0.56	0.563	14.29	0.284	7.20	0.246	6.25	2.97	13.23	10.66	1.87	C0176-022-0563-S	0.312	7.91	2.33	10.35	9.27	1.62
C0176-022-0625-M	0.176	4.47	0.022	0.56	0.625	15.88	0.312	7.94	0.270	6.86	2.97	13.23	9.51	1.66	C0176-022-0625-S	0.344	8.73	2.33	10.35	8.27	1.45
C0176-022-0688-M	0.176	4.47	0.022	0.56	0.688	17.46	0.341	8.67	0.294	7.47	2.97	13.23	8.59	1.50	C0176-022-0688-S	0.376	9.55	2.33	10.35	7.47	1.31
C0176-022-0750-M	0.176	4.47	0.022	0.56	0.750	19.05	0.370	9.40	0.318	8.08	2.97	13.23	7.83	1.37	C0176-022-0750-S	0.408	10.37	2.33	10.35	6.81	1.19
C0176-022-0813-M	0.176	4.47	0.022	0.56	0.813	20.64	0.399	10.14	0.342	8.70	2.97	13.23	7.19	1.26	C0176-022-0813-S	0.441	11.19	2.33	10.35	6.25	1.09
C0176-022-0875-M	0.176	4.47	0.022	0.56	0.875	22.23	0.428	10.87	0.366	9.31	2.97	13.23	6.65	1.16	C0176-022-0875-S	0.473	12.01	2.33	10.35	5.78	1.01
C0176-022-0938-M	0.176	4.47	0.022	0.56	0.938	23.81	0.457	11.60	0.391	9.92	2.97	13.23	6.19	1.08	C0176-022-0938-S	0.505	12.83	2.33	10.35	5.38	0.94
C0176-022-1000-M	0.176	4.47	0.022	0.56	1.000	25.40	0.486	12.34	0.415	10.53	2.97	13.23	5.78	1.01	C0176-022-1000-S	0.537	13.65	2.33	10.35	5.03	0.88
C0176-022-1125-M	0.176	4.47	0.022	0.56	1.125	28.58	0.543	13.80	0.463	11.76	2.97	13.23	5.11	0.89	C0176-022-1125-S	0.602	15.28	2.33	10.35	4.45	0.78
C0176-022-1250-M	0.176	4.47	0.022	0.56	1.250	31.75	0.601	15.27	0.511	12.98	2.97	13.23	4.58	0.80	C0176-022-1250-S	0.666	16.92	2.33	10.35	3.98	0.70
C0176-022-1375-M	0.176	4.47	0.022	0.56	1.375	34.93	0.659	16.74	0.559	14.20	2.97	13.23	4.15	0.73	C0176-022-1375-S	0.731	18.56	2.33	10.35	3.61	0.63
C0176-022-1500-M	0.176	4.47	0.022	0.56	1.500	38.10	0.717	18.20	0.607	15.43	2.97	13.23	3.80	0.66	C0176-022-1500-S	0.795	20.20	2.33	10.35	3.30	0.58
C0176-022-1625-M	0.176	4.47	0.022	0.56	1.625	41.28	0.774	19.67	0.656	16.65	2.97	13.23	3.50	0.61	C0176-022-1625-S	0.860	21.84	2.33	10.35	3.04	0.53
C0176-022-1750-M	0.176	4.47	0.022	0.56	1.750	44.45	0.832	21.14	0.704	17.87	2.97	13.23	3.24	0.57	C0176-022-1750-S	0.924	23.47	2.33	10.35	2.82	0.49
C0176-022-1875-M	0.176	4.47	0.022	0.56	1.875	47.63	0.890	22.60	0.752	19.10	2.97	13.23	3.02	0.53	C0176-022-1875-S	0.989	25.11	2.33	10.35	2.62	0.46
C0176-022-2000-M	0.176	4.47	0.022	0.56	2.000	50.80	0.948	24.07	0.800	20.32	2.97	13.23	2.83	0.49	C0176-022-2000-S	1.053	26.75	2.33	10.35	2.46	0.43
C0176-022-2125-M	0.176	4.47	0.022	0.56	2.125	53.98	1.005	25.54	0.848	21.55	2.97	13.23	2.66	0.46	C0176-022-2125-S	1.118	28.39	2.33	10.35	2.31	0.40
C0176-022-2250-M	0.176	4.47	0.022	0.56	2.250	57.15	1.063	27.00	0.896	22.77	2.97	13.23	2.51	0.44	C0176-022-2250-S	1.182	30.03	2.33	10.35	2.18	0.38
C0176-022-2375-M	0.176	4.47	0.022	0.56	2.375	60.33	1.121	28.47	0.945	23.99	2.97	13.23	2.37	0.41	C0176-022-2375-S	1.247	31.67	2.33	10.35	2.06	0.36
C0176-022-2500-M	0.176	4.47	0.022	0.56	2.500	63.50	1.179	29.94	0.993	25.22	2.97	13.23	2.25	0.39	C0176-022-2500-S	1.311	33.30	2.33	10.35	1.96	0.34
C0176-022-2625-M	0.176	4.47	0.022	0.56	2.625	66.68	1.236	31.40	1.041	26.44	2.97	13.23	2.14	0.37	C0176-022-2625-S	1.376	34.94	2.33	10.35	1.86	0.33
C0176-022-2750-M	0.176	4.47	0.022	0.56	2.750	69.85	1.294	32.87	1.089	27.66	2.97	13.23	2.04	0.36	C0176-022-2750-S	1.440	36.58	2.33	10.35	1.78	0.31
C0176-022-2875-M	0.176	4.47	0.022	0.56	2.875	73.03	1.352	34.34	1.137	28.89	2.97	13.23	1.95	0.34	C0176-022-2875-S	1.505	38.22	2.33	10.35	1.70	0.30

Part Numbers with an "*" are squared and not ground. **Part Numbers in bold** represent the newly expanded Associated Spring RAYMOND compression spring offering.

MUSIC WIRE															STAINLESS STEEL					
Catalog #	Outside Diameter (OD)		Wire Diameter (d)		Free Length (L) Approx		Load Length (L_1)		Solid Height (Sh) Approx		Load (P) at L_1		Spring Rate (R)		Catalog #	Load Length (L_1)		Load (P) at L_1		Spring Rate (R)	
	in	mm	in	mm	in	mm	in	mm	in	mm	lb	N	lb/in	N/mm		in	mm	lb	N	lb/in	N/mm
C0176-022-3000-M	**0.176**	**4.47**	**0.022**	**0.56**	**3.000**	**76.20**	**1.410**	**35.81**	**1.185**	**30.11**	**2.97**	**13.23**	**1.87**	**0.33**	**C0176-022-3000-S**	**1.569**	**39.86**	**2.33**	**10.35**	**1.63**	**0.29**
C0176-023-0313-M	**0.176**	**4.47**	**0.023**	**0.58**	**0.313**	**7.94**	**0.175**	**4.46**	**0.159**	**4.03**	**3.36**	**14.96**	**24.54**	**4.29**	**C0176-023-0313-S**	**0.189**	**4.80**	**2.64**	**11.72**	**21.34**	**3.73**
C0176-023-0375-M	**0.176**	**4.47**	**0.023**	**0.58**	**0.375**	**9.53**	**0.206**	**5.23**	**0.185**	**4.69**	**3.36**	**14.96**	**19.88**	**3.48**	**C0176-023-0375-S**	**0.223**	**5.65**	**2.64**	**11.72**	**17.28**	**3.02**
C0176-023-0438-M	**0.176**	**4.47**	**0.023**	**0.58**	**0.438**	**11.11**	**0.236**	**6.00**	**0.211**	**5.35**	**3.36**	**14.96**	**16.70**	**2.92**	**C0176-023-0438-S**	**0.256**	**6.50**	**2.64**	**11.72**	**14.53**	**2.54**
C0176-023-0500-M	**0.176**	**4.47**	**0.023**	**0.58**	**0.500**	**12.70**	**0.267**	**6.77**	**0.237**	**6.01**	**3.36**	**14.96**	**14.41**	**2.52**	**C0176-023-0500-S**	**0.290**	**7.36**	**2.64**	**11.72**	**12.53**	**2.19**
C0176-023-0563-M	**0.176**	**4.47**	**0.023**	**0.58**	**0.563**	**14.29**	**0.297**	**7.54**	**0.263**	**6.67**	**3.36**	**14.96**	**12.66**	**2.22**	**C0176-023-0563-S**	**0.323**	**8.21**	**2.64**	**11.72**	**11.01**	**1.93**
C0176-023-0625-M	**0.176**	**4.47**	**0.023**	**0.58**	**0.625**	**15.88**	**0.327**	**8.31**	**0.288**	**7.33**	**3.36**	**14.96**	**11.30**	**1.98**	**C0176-023-0625-S**	**0.357**	**9.06**	**2.64**	**11.72**	**9.82**	**1.72**
C0176-023-0688-M	**0.176**	**4.47**	**0.023**	**0.58**	**0.688**	**17.46**	**0.358**	**9.08**	**0.314**	**7.99**	**3.36**	**14.96**	**10.19**	**1.78**	**C0176-023-0688-S**	**0.390**	**9.91**	**2.64**	**11.72**	**8.86**	**1.55**
C0176-023-0750-M	**0.176**	**4.47**	**0.023**	**0.58**	**0.750**	**19.05**	**0.388**	**9.85**	**0.340**	**8.64**	**3.36**	**14.96**	**9.29**	**1.63**	**C0176-023-0750-S**	**0.424**	**10.76**	**2.64**	**11.72**	**8.08**	**1.41**
C0176-023-0813-M	**0.176**	**4.47**	**0.023**	**0.58**	**0.813**	**20.64**	**0.418**	**10.63**	**0.366**	**9.30**	**3.36**	**14.96**	**8.53**	**1.49**	**C0176-023-0813-S**	**0.457**	**11.61**	**2.64**	**11.72**	**7.42**	**1.30**
C0176-023-0875-M	**0.176**	**4.47**	**0.023**	**0.58**	**0.875**	**22.23**	**0.449**	**11.40**	**0.392**	**9.96**	**3.36**	**14.96**	**7.89**	**1.38**	**C0176-023-0875-S**	**0.491**	**12.47**	**2.64**	**11.72**	**6.86**	**1.20**
C0176-023-0938-M	**0.176**	**4.47**	**0.023**	**0.58**	**0.938**	**23.81**	**0.479**	**12.17**	**0.418**	**10.62**	**3.36**	**14.96**	**7.34**	**1.28**	**C0176-023-0938-S**	**0.524**	**13.32**	**2.64**	**11.72**	**6.38**	**1.12**
C0176-023-1000-M	**0.176**	**4.47**	**0.023**	**0.58**	**1.000**	**25.40**	**0.509**	**12.94**	**0.444**	**11.28**	**3.36**	**14.96**	**6.86**	**1.20**	**C0176-023-1000-S**	**0.558**	**14.17**	**2.64**	**11.72**	**5.96**	**1.04**
C0176-023-1125-M	**0.176**	**4.47**	**0.023**	**0.58**	**1.125**	**28.58**	**0.570**	**14.48**	**0.496**	**12.59**	**3.36**	**14.96**	**6.06**	**1.06**	**C0176-023-1125-S**	**0.625**	**15.87**	**2.64**	**11.72**	**5.27**	**0.92**
C0176-023-1250-M	**0.176**	**4.47**	**0.023**	**0.58**	**1.250**	**31.75**	**0.631**	**16.02**	**0.548**	**13.91**	**3.36**	**14.96**	**5.43**	**0.95**	**C0176-023-1250-S**	**0.692**	**17.58**	**2.64**	**11.72**	**4.72**	**0.83**
C0176-023-1375-M	**0.176**	**4.47**	**0.023**	**0.58**	**1.375**	**34.93**	**0.692**	**17.57**	**0.600**	**15.23**	**3.36**	**14.96**	**4.92**	**0.86**	**C0176-023-1375-S**	**0.759**	**19.28**	**2.64**	**11.72**	**4.28**	**0.75**
C0176-023-1500-M	**0.176**	**4.47**	**0.023**	**0.58**	**1.500**	**38.10**	**0.752**	**19.11**	**0.651**	**16.54**	**3.36**	**14.96**	**4.50**	**0.79**	**C0176-023-1500-S**	**0.826**	**20.98**	**2.64**	**11.72**	**3.91**	**0.68**
C0176-023-1625-M	**0.176**	**4.47**	**0.023**	**0.58**	**1.625**	**41.28**	**0.813**	**20.65**	**0.703**	**17.86**	**3.36**	**14.96**	**4.14**	**0.72**	**C0176-023-1625-S**	**0.893**	**22.69**	**2.64**	**11.72**	**3.60**	**0.63**
C0176-023-1750-M	**0.176**	**4.47**	**0.023**	**0.58**	**1.750**	**44.45**	**0.874**	**22.19**	**0.755**	**19.18**	**3.36**	**14.96**	**3.84**	**0.67**	**C0176-023-1750-S**	**0.960**	**24.39**	**2.64**	**11.72**	**3.34**	**0.58**
C0176-023-1875-M	**0.176**	**4.47**	**0.023**	**0.58**	**1.875**	**47.63**	**0.934**	**23.74**	**0.807**	**20.50**	**3.36**	**14.96**	**3.58**	**0.63**	**C0176-023-1875-S**	**1.027**	**26.09**	**2.64**	**11.72**	**3.11**	**0.54**
C0176-023-2000-M	**0.176**	**4.47**	**0.023**	**0.58**	**2.000**	**50.80**	**0.995**	**25.28**	**0.859**	**21.81**	**3.36**	**14.96**	**3.35**	**0.59**	**C0176-023-2000-S**	**1.094**	**27.80**	**2.64**	**11.72**	**2.91**	**0.51**
C0176-023-2125-M	**0.176**	**4.47**	**0.023**	**0.58**	**2.125**	**53.98**	**1.056**	**26.82**	**0.911**	**23.13**	**3.36**	**14.96**	**3.15**	**0.55**	**C0176-023-2125-S**	**1.161**	**29.50**	**2.64**	**11.72**	**2.74**	**0.48**
C0176-023-2250-M	**0.176**	**4.47**	**0.023**	**0.58**	**2.250**	**57.15**	**1.117**	**28.36**	**0.962**	**24.45**	**3.36**	**14.96**	**2.97**	**0.52**	**C0176-023-2250-S**	**1.228**	**31.20**	**2.64**	**11.72**	**2.58**	**0.45**
C0176-023-2375-M	**0.176**	**4.47**	**0.023**	**0.58**	**2.375**	**60.33**	**1.177**	**29.90**	**1.014**	**25.76**	**3.36**	**14.96**	**2.81**	**0.49**	**C0176-023-2375-S**	**1.296**	**32.91**	**2.64**	**11.72**	**2.44**	**0.43**
C0176-023-2500-M	**0.176**	**4.47**	**0.023**	**0.58**	**2.500**	**63.50**	**1.238**	**31.45**	**1.066**	**27.08**	**3.36**	**14.96**	**2.67**	**0.47**	**C0176-023-2500-S**	**1.363**	**34.61**	**2.64**	**11.72**	**2.32**	**0.41**
C0176-023-2625-M	**0.176**	**4.47**	**0.023**	**0.58**	**2.625**	**66.68**	**1.299**	**32.99**	**1.118**	**28.40**	**3.36**	**14.96**	**2.54**	**0.44**	**C0176-023-2625-S**	**1.430**	**36.31**	**2.64**	**11.72**	**2.21**	**0.39**
C0176-023-2750-M	**0.176**	**4.47**	**0.023**	**0.58**	**2.750**	**69.85**	**1.359**	**34.53**	**1.170**	**29.71**	**3.36**	**14.96**	**2.42**	**0.42**	**C0176-023-2750-S**	**1.497**	**38.02**	**2.64**	**11.72**	**2.10**	**0.37**
C0176-023-2875-M	**0.176**	**4.47**	**0.023**	**0.58**	**2.875**	**73.03**	**1.420**	**36.07**	**1.222**	**31.03**	**3.36**	**14.96**	**2.31**	**0.40**	**C0176-023-2875-S**	**1.564**	**39.72**	**2.64**	**11.72**	**2.01**	**0.35**
C0176-023-3000-M	**0.176**	**4.47**	**0.023**	**0.58**	**3.000**	**76.20**	**1.481**	**37.62**	**1.274**	**32.35**	**3.36**	**14.96**	**2.21**	**0.39**	**C0176-023-3000-S**	**1.631**	**41.42**	**2.64**	**11.72**	**1.93**	**0.34**
C0176-024-0313-M	**0.176**	**4.47**	**0.024**	**0.61**	**0.313**	**7.94**	**0.183**	**4.64**	**0.168**	**4.26**	**3.78**	**16.83**	**29.15**	**5.10**	**C0176-024-0313-S**	**0.195**	**4.96**	**2.97**	**13.21**	**25.35**	**4.44**
C0176-024-0375-M	**0.176**	**4.47**	**0.024**	**0.61**	**0.375**	**9.53**	**0.215**	**5.45**	**0.196**	**4.97**	**3.78**	**16.83**	**23.58**	**4.13**	**C0176-024-0375-S**	**0.230**	**5.85**	**2.97**	**13.21**	**20.50**	**3.59**
C0176-024-0438-M	**0.176**	**4.47**	**0.024**	**0.61**	**0.438**	**11.11**	**0.246**	**6.26**	**0.223**	**5.67**	**3.78**	**16.83**	**19.79**	**3.46**	**C0176-024-0438-S**	**0.265**	**6.73**	**2.97**	**13.21**	**17.21**	**3.01**
C0176-024-0500-M	**0.176**	**4.47**	**0.024**	**0.61**	**0.500**	**12.70**	**0.278**	**7.07**	**0.251**	**6.38**	**3.78**	**16.83**	**17.06**	**2.98**	**C0176-024-0500-S**	**0.300**	**7.61**	**2.97**	**13.21**	**14.83**	**2.60**
C0176-024-0563-M	**0.176**	**4.47**	**0.024**	**0.61**	**0.563**	**14.29**	**0.310**	**7.88**	**0.279**	**7.08**	**3.78**	**16.83**	**14.99**	**2.62**	**C0176-024-0563-S**	**0.335**	**8.50**	**2.97**	**13.21**	**13.03**	**2.28**
C0176-024-0625-M	**0.176**	**4.47**	**0.024**	**0.61**	**0.625**	**15.88**	**0.342**	**8.68**	**0.307**	**7.79**	**3.78**	**16.83**	**13.36**	**2.34**	**C0176-024-0625-S**	**0.369**	**9.38**	**2.97**	**13.21**	**11.62**	**2.03**
C0176-024-0688-M	**0.176**	**4.47**	**0.024**	**0.61**	**0.688**	**17.46**	**0.374**	**9.49**	**0.334**	**8.49**	**3.78**	**16.83**	**12.06**	**2.11**	**C0176-024-0688-S**	**0.404**	**10.27**	**2.97**	**13.21**	**10.48**	**1.83**
C0176-024-0750-M	**0.176**	**4.47**	**0.024**	**0.61**	**0.750**	**19.05**	**0.406**	**10.30**	**0.362**	**9.20**	**3.78**	**16.83**	**10.98**	**1.92**	**C0176-024-0750-S**	**0.439**	**11.15**	**2.97**	**13.21**	**9.55**	**1.67**
C0176-024-0813-M	**0.176**	**4.47**	**0.024**	**0.61**	**0.813**	**20.64**	**0.437**	**11.11**	**0.390**	**9.90**	**3.78**	**16.83**	**10.09**	**1.76**	**C0176-024-0813-S**	**0.474**	**12.04**	**2.97**	**13.21**	**8.77**	**1.53**
C0176-024-0875-M	**0.176**	**4.47**	**0.024**	**0.61**	**0.875**	**22.23**	**0.469**	**11.92**	**0.417**	**10.60**	**3.78**	**16.83**	**9.32**	**1.63**	**C0176-024-0875-S**	**0.509**	**12.92**	**2.97**	**13.21**	**8.11**	**1.42**
C0176-024-0938-M	**0.176**	**4.47**	**0.024**	**0.61**	**0.938**	**23.81**	**0.501**	**12.73**	**0.445**	**11.31**	**3.78**	**16.83**	**8.67**	**1.52**	**C0176-024-0938-S**	**0.544**	**13.81**	**2.97**	**13.21**	**7.54**	**1.32**
C0176-024-1000-M	**0.176**	**4.47**	**0.024**	**0.61**	**1.000**	**25.40**	**0.533**	**13.54**	**0.473**	**12.01**	**3.78**	**16.83**	**8.10**	**1.42**	**C0176-024-1000-S**	**0.578**	**14.69**	**2.97**	**13.21**	**7.04**	**1.23**
C0176-024-1125-M	**0.176**	**4.47**	**0.024**	**0.61**	**1.125**	**28.58**	**0.597**	**15.15**	**0.528**	**13.42**	**3.78**	**16.83**	**7.16**	**1.25**	**C0176-024-1125-S**	**0.648**	**16.46**	**2.97**	**13.21**	**6.22**	**1.09**
C0176-024-1250-M	**0.176**	**4.47**	**0.024**	**0.61**	**1.250**	**31.75**	**0.660**	**16.77**	**0.584**	**14.83**	**3.78**	**16.83**	**6.41**	**1.12**	**C0176-024-1250-S**	**0.718**	**18.23**	**2.97**	**13.21**	**5.58**	**0.98**
C0176-024-1375-M	**0.176**	**4.47**	**0.024**	**0.61**	**1.375**	**34.93**	**0.724**	**18.39**	**0.639**	**16.24**	**3.78**	**16.83**	**5.81**	**1.02**	**C0176-024-1375-S**	**0.787**	**20.00**	**2.97**	**13.21**	**5.05**	**0.88**
C0176-024-1500-M	**0.176**	**4.47**	**0.024**	**0.61**	**1.500**	**38.10**	**0.788**	**20.00**	**0.695**	**17.65**	**3.78**	**16.83**	**5.31**	**0.93**	**C0176-024-1500-S**	**0.857**	**21.76**	**2.97**	**13.21**	**4.62**	**0.81**
C0176-024-1625-M	**0.176**	**4.47**	**0.024**	**0.61**	**1.625**	**41.28**	**0.851**	**21.62**	**0.750**	**19.06**	**3.78**	**16.83**	**4.89**	**0.86**	**C0176-024-1625-S**	**0.926**	**23.53**	**2.97**	**13.21**	**4.25**	**0.74**
C0176-024-1750-M	**0.176**	**4.47**	**0.024**	**0.61**	**1.750**	**44.45**	**0.915**	**23.24**	**0.806**	**20.47**	**3.78**	**16.83**	**4.53**	**0.79**	**C0176-024-1750-S**	**0.996**	**25.30**	**2.97**	**13.21**	**3.94**	**0.69**
C0176-024-1875-M	**0.176**	**4.47**	**0.024**	**0.61**	**1.875**	**47.63**	**0.979**	**24.86**	**0.861**	**21.88**	**3.78**	**16.83**	**4.22**	**0.74**	**C0176-024-1875-S**	**1.066**	**27.07**	**2.97**	**13.21**	**3.67**	**0.64**
C0176-024-2000-M	**0.176**	**4.47**	**0.024**	**0.61**	**2.000**	**50.80**	**1.042**	**26.47**	**0.917**	**23.29**	**3.78**	**16.83**	**3.95**	**0.69**	**C0176-024-2000-S**	**1.135**	**28.84**	**2.97**	**13.21**	**3.43**	**0.60**
C0176-024-2125-M	**0.176**	**4.47**	**0.024**	**0.61**	**2.125**	**53.98**	**1.106**	**28.09**	**0.972**	**24.70**	**3.78**	**16.83**	**3.71**	**0.65**	**C0176-024-2125-S**	**1.205**	**30.61**	**2.97**	**13.21**	**3.23**	**0.57**
C0176-024-2250-M	**0.176**	**4.47**	**0.024**	**0.61**	**2.250**	**57.15**	**1.170**	**29.71**	**1.028**	**26.11**	**3.78**	**16.83**	**3.50**	**0.61**	**C0176-024-2250-S**	**1.275**	**32.38**	**2.97**	**13.21**	**3.04**	**0.53**
C0176-024-2375-M	**0.176**	**4.47**	**0.024**	**0.61**	**2.375**	**60.33**	**1.233**	**31.32**	**1.083**	**27.52**	**3.78**	**16.83**	**3.31**	**0.58**	**C0176-024-2375-S**	**1.344**	**34.14**	**2.97**	**13.21**	**2.88**	**0.50**
C0176-024-2500-M	**0.176**	**4.47**	**0.024**	**0.61**	**2.500**	**63.50**	**1.297**	**32.94**	**1.139**	**28.93**	**3.78**	**16.83**	**3.14**	**0.55**	**C0176-024-2500-S**	**1.414**	**35.91**	**2.97**	**13.21**	**2.73**	**0.48**
C0176-024-2625-M	**0.176**	**4.47**	**0.024**	**0.61**	**2.625**	**66.68**	**1.361**	**34.56**	**1.194**	**30.34**	**3.78**	**16.83**	**2.99**	**0.52**	**C0176-024-2625-S**	**1.484**	**37.68**	**2.97**	**13.21**	**2.60**	**0.46**
C0176-024-2750-M	**0.176**	**4.47**	**0.024**	**0.61**	**2.750**	**69.85**	**1.424**	**36.18**	**1.250**	**31.74**	**3.78**	**16.83**	**2.85**	**0.50**	**C0176-024-2750-S**	**1.553**	**39.45**	**2.97**	**13.21**	**2.48**	**0.43**
C0176-024-2875-M	**0.176**	**4.47**	**0.024**	**0.61**	**2.875**	**73.03**	**1.488**	**37.79**	**1.305**	**33.15**	**3.78**	**16.83**	**2.73**	**0.48**	**C0176-024-2875-S**	**1.623**	**41.22**	**2.97**	**13.21**	**2.37**	**0.41**
C0176-024-3000-M	**0.176**	**4.47**	**0.024**	**0.61**	**3.000**	**76.20**	**1.552**	**39.41**	**1.361**	**34.56**	**3.78**	**16.83**	**2.61**	**0.46**	**C0176-024-3000-S**	**1.692**	**42.99**	**2.97**	**13.21**	**2.27**	**0.40**
C0176-026-0313-M	**0.176**	**4.47**	**0.026**	**0.66**	**0.313**	**7.94**	**0.197**	**5.00**	**0.185**	**4.70**	**4.72**	**20.98**	**40.72**	**7.13**	**C0176-026-0313-S**	**0.208**	**5.27**	**3.71**	**16.51**	**35.41**	**6.20**
C0176-026-0375-M	**0.176**	**4.47**	**0.026**	**0.66**	**0.375**	**9.53**	**0.231**	**5.88**	**0.216**	**5.50**	**4.72**	**20.98**	**32.84**	**5.75**	**C0176-026-0375-S**	**0.245**	**6.22**	**3.71**	**16.51**	**28.56**	**5.00**
C0176-026-0438-M	**0.176**	**4.47**	**0.026**	**0.66**	**0.438**	**11.11**	**0.266**	**6.76**	**0.248**	**6.29**	**4.72**	**20.98**	**27.52**	**4.82**	**C0176-026-0438-S**	**0.282**	**7.17**	**3.71**	**16.51**	**23.93**	**4.19**
C0176-026-0500-M	**0.176**	**4.47**	**0.026**	**0.66**	**0.500**	**12.70**	**0.301**	**7.64**	**0.279**	**7.09**	**4.72**	**20.98**	**23.68**	**4.14**	**C0176-026-0500-S**	**0.320**	**8.12**	**3.71**	**16.51**	**20.59**	**3.60**
C0176-026-0563-M	**0.176**	**4.47**	**0.026**	**0.66**	**0.563**	**14.29**	**0.336**	**8.52**	**0.310**	**7.88**	**4.72**	**20.98**	**20.78**	**3.64**	**C0176-026-0563-S**	**0.357**	**9.07**	**3.71**	**16.51**	**18.07**	**3.16**
C0176-026-0625-M	**0.176**	**4.47**	**0.026**	**0.66**	**0.625**	**15.88**	**0.370**	**9.41**	**0.342**	**8.68**	**4.72**	**20.98**	**18.51**	**3.24**	**C0176-026-0625-S**	**0.394**	**10.02**	**3.71**	**16.51**	**16.10**	**2.82**
C0176-026-0688-M	**0.176**	**4.47**	**0.026**	**0.66**	**0.688**	**17.46**	**0.405**	**10.29**	**0.373**	**9.47**	**4.72**	**20.98**	**16.69**	**2.92**	**C0176-026-0688-S**	**0.432**	**10.97**	**3.71**	**16.51**	**14.52**	**2.54**

FOR INFORMATION ON ALTERNATIVE FINISHES, SEE PAGE 311

Part Numbers with an "*" are squared and not ground. **Part Numbers in bold** represent the newly expanded Associated Spring RAYMOND compression spring offering.

(OD) 0.176 - 0.176

MUSIC WIRE															STAINLESS STEEL						
Catalog #	Outside Diameter (OD)		Wire Diameter (d)		Free Length (L) Approx		Load Length (L_1)		Solid Height (Sh) Approx		Load (P) at L_1		Spring Rate (R)		Catalog #	Load Length (L_1)		Load (P) at L_1		Spring Rate (R)	
	in	mm	in	mm	in	mm	in	mm	in	mm	lb	N	lb/in	N/mm		in	mm	lb	N	lb/in	N/mm
C0176-026-0750-M	0.176	4.47	0.026	0.66	0.750	19.05	0.440	11.17	0.404	10.27	4.72	20.98	15.20	2.66	C0176-026-0750-S	0.469	11.92	3.71	16.51	13.22	2.31
C0176-026-0813-M	0.176	4.47	0.026	0.66	0.813	20.64	0.474	12.05	0.436	11.06	4.72	20.98	13.95	2.44	C0176-026-0813-S	0.506	12.86	3.71	16.51	12.13	2.12
C0176-026-0875-M	0.176	4.47	0.026	0.66	0.875	22.23	0.509	12.93	0.467	11.86	4.72	20.98	12.89	2.26	C0176-026-0875-S	0.544	13.81	3.71	16.51	11.21	1.96
C0176-026-0938-M	0.176	4.47	0.026	0.66	0.938	23.81	0.544	13.81	0.498	12.65	4.72	20.98	11.98	2.10	C0176-026-0938-S	0.581	14.76	3.71	16.51	10.42	1.82
C0176-026-1000-M	0.176	4.47	0.026	0.66	1.000	25.40	0.579	14.70	0.529	13.45	4.72	20.98	11.19	1.96	C0176-026-1000-S	0.619	15.71	3.71	16.51	9.73	1.70
C0176-026-1125-M	0.176	4.47	0.026	0.66	1.125	28.58	0.648	16.46	0.592	15.04	4.72	20.98	9.89	1.73	C0176-026-1125-S	0.693	17.61	3.71	16.51	8.60	1.51
C0176-026-1250-M	0.176	4.47	0.026	0.66	1.250	31.75	0.717	18.22	0.655	16.63	4.72	20.98	8.86	1.55	C0176-026-1250-S	0.768	19.50	3.71	16.51	7.70	1.35
C0176-026-1375-M	0.176	4.47	0.026	0.66	1.375	34.93	0.787	19.99	0.717	18.22	4.72	20.98	8.02	1.40	C0176-026-1375-S	0.843	21.40	3.71	16.51	6.97	1.22
C0176-026-1500-M	0.176	4.47	0.026	0.66	1.500	38.10	0.856	21.75	0.780	19.81	4.72	20.98	7.33	1.28	C0176-026-1500-S	0.917	23.30	3.71	16.51	6.37	1.11
C0176-026-1625-M	0.176	4.47	0.026	0.66	1.625	41.28	0.926	23.51	0.842	21.40	4.72	20.98	6.74	1.18	C0176-026-1625-S	0.992	25.20	3.71	16.51	5.86	1.03
C0176-026-1750-M	0.176	4.47	0.026	0.66	1.750	44.45	0.995	25.28	0.905	22.99	4.72	20.98	6.25	1.09	C0176-026-1750-S	1.067	27.09	3.71	16.51	5.43	0.95
C0176-026-1875-M	0.176	4.47	0.026	0.66	1.875	47.63	1.065	27.04	0.968	24.58	4.72	20.98	5.82	1.02	C0176-026-1875-S	1.141	28.99	3.71	16.51	5.06	0.89
C0176-026-2000-M	0.176	4.47	0.026	0.66	2.000	50.80	1.134	28.81	1.030	26.17	4.72	20.98	5.45	0.95	C0176-026-2000-S	1.216	30.89	3.71	16.51	4.74	0.83
C0176-026-2125-M	0.176	4.47	0.026	0.66	2.125	53.98	1.204	30.57	1.093	27.76	4.72	20.98	5.12	0.90	C0176-026-2125-S	1.291	32.79	3.71	16.51	4.45	0.78
C0176-026-2250-M	0.176	4.47	0.026	0.66	2.250	57.15	1.273	32.33	1.156	29.35	4.72	20.98	4.83	0.84	C0176-026-2250-S	1.365	34.68	3.71	16.51	4.20	0.74
C0176-026-2375-M	0.176	4.47	0.026	0.66	2.375	60.33	1.342	34.10	1.218	30.94	4.72	20.98	4.57	0.80	C0176-026-2375-S	1.440	36.58	3.71	16.51	3.97	0.69
C0176-026-2500-M	0.176	4.47	0.026	0.66	2.500	63.50	1.412	35.86	1.281	32.53	4.72	20.98	4.33	0.76	C0176-026-2500-S	1.515	38.48	3.71	16.51	3.77	0.66
C0176-026-2625-M	0.176	4.47	0.026	0.66	2.625	66.68	1.481	37.62	1.343	34.12	4.72	20.98	4.12	0.72	C0176-026-2625-S	1.590	40.37	3.71	16.51	3.59	0.63
C0176-026-2750-M	0.176	4.47	0.026	0.66	2.750	69.85	1.551	39.39	1.406	35.71	4.72	20.98	3.93	0.69	C0176-026-2750-S	1.664	42.27	3.71	16.51	3.42	0.60
C0176-026-2875-M	0.176	4.47	0.026	0.66	2.875	73.03	1.620	41.15	1.469	37.30	4.72	20.98	3.76	0.66	C0176-026-2875-S	1.739	44.17	3.71	16.51	3.27	0.57
C0176-026-3000-M	0.176	4.47	0.026	0.66	3.000	76.20	1.690	42.91	1.531	38.89	4.72	20.98	3.60	0.63	C0176-026-3000-S	1.814	46.07	3.71	16.51	3.13	0.55
C0176-029-0313-M	0.176	4.47	0.029	0.74	0.313	7.94	0.216	5.49	0.209	5.31	6.36	28.27	65.85	11.52	C0176-029-0313-S	0.225	5.71	5.02	22.33	57.26	10.02
C0176-029-0375-M	0.176	4.47	0.029	0.74	0.375	9.53	0.255	6.47	0.245	6.23	6.36	28.27	52.87	9.25	C0176-029-0375-S	0.266	6.75	5.02	22.33	45.97	8.04
C0176-029-0438-M	0.176	4.47	0.029	0.74	0.438	11.11	0.294	7.46	0.282	7.15	6.36	28.27	44.16	7.73	C0176-029-0438-S	0.307	7.79	5.02	22.33	38.40	6.72
C0176-029-0500-M	0.176	4.47	0.029	0.74	0.500	12.70	0.332	8.44	0.318	8.08	6.36	28.27	37.92	6.64	C0176-029-0500-S	0.348	8.83	5.02	22.33	32.97	5.77
C0176-029-0563-M	0.176	4.47	0.029	0.74	0.563	14.29	0.371	9.43	0.354	9.00	6.36	28.27	33.22	5.81	C0176-029-0563-S	0.389	9.87	5.02	22.33	28.89	5.06
C0176-029-0625-M	0.176	4.47	0.029	0.74	0.625	15.88	0.410	10.41	0.391	9.92	6.36	28.27	29.56	5.17	C0176-029-0625-S	0.430	10.91	5.02	22.33	25.70	4.50
C0176-029-0688-M	0.176	4.47	0.029	0.74	0.688	17.46	0.449	11.40	0.427	10.84	6.36	28.27	26.62	4.66	C0176-029-0688-S	0.471	11.95	5.02	22.33	23.15	4.05
C0176-029-0750-M	0.176	4.47	0.029	0.74	0.750	19.05	0.488	12.38	0.463	11.77	6.36	28.27	24.22	4.24	C0176-029-0750-S	0.512	12.99	5.02	22.33	21.06	3.69
C0176-029-0813-M	0.176	4.47	0.029	0.74	0.813	20.64	0.526	13.37	0.500	12.69	6.36	28.27	22.21	3.89	C0176-029-0813-S	0.553	14.04	5.02	22.33	19.32	3.38
C0176-029-0875-M	0.176	4.47	0.029	0.74	0.875	22.23	0.565	14.35	0.536	13.61	6.36	28.27	20.51	3.59	C0176-029-0875-S	0.594	15.08	5.02	22.33	17.84	3.12
C0176-029-0938-M	0.176	4.47	0.029	0.74	0.938	23.81	0.604	15.34	0.572	14.54	6.36	28.27	19.06	3.33	C0176-029-0938-S	0.635	16.12	5.02	22.33	16.57	2.90
C0176-029-1000-M	0.176	4.47	0.029	0.74	1.000	25.40	0.643	16.33	0.609	15.46	6.36	28.27	17.79	3.11	C0176-029-1000-S	0.675	17.16	5.02	22.33	15.47	2.71
C0176-029-1125-M	0.176	4.47	0.029	0.74	1.125	28.58	0.720	18.30	0.681	17.31	6.36	28.27	15.71	2.75	C0176-029-1125-S	0.757	19.24	5.02	22.33	13.66	2.39
C0176-029-1250-M	0.176	4.47	0.029	0.74	1.250	31.75	0.798	20.27	0.754	19.15	6.36	28.27	14.06	2.46	C0176-029-1250-S	0.839	21.32	5.02	22.33	12.23	2.14
C0176-029-1375-M	0.176	4.47	0.029	0.74	1.375	34.93	0.876	22.24	0.827	21.00	6.36	28.27	12.73	2.23	C0176-029-1375-S	0.921	23.40	5.02	22.33	11.07	1.94
C0176-029-1500-M	0.176	4.47	0.029	0.74	1.500	38.10	0.953	24.21	0.899	22.85	6.36	28.27	11.62	2.03	C0176-029-1500-S	1.003	25.48	5.02	22.33	10.11	1.77
C0176-029-1625-M	0.176	4.47	0.029	0.74	1.625	41.28	1.031	26.18	0.972	24.69	6.36	28.27	10.70	1.87	C0176-029-1625-S	1.085	27.56	5.02	22.33	9.30	1.63
C0176-029-1750-M	0.176	4.47	0.029	0.74	1.750	44.45	1.108	28.15	1.045	26.54	6.36	28.27	9.91	1.73	C0176-029-1750-S	1.167	29.64	5.02	22.33	8.61	1.51
C0176-029-1875-M	0.176	4.47	0.029	0.74	1.875	47.63	1.186	30.12	1.118	28.38	6.36	28.27	9.22	1.61	C0176-029-1875-S	1.249	31.73	5.02	22.33	8.02	1.40
C0176-029-2000-M	0.176	4.47	0.029	0.74	2.000	50.80	1.264	32.09	1.190	30.23	6.36	28.27	8.63	1.51	C0176-029-2000-S	1.331	33.81	5.02	22.33	7.50	1.31
C0176-029-2125-M	0.176	4.47	0.029	0.74	2.125	53.98	1.341	34.06	1.263	32.08	6.36	28.27	8.11	1.42	C0176-029-2125-S	1.413	35.89	5.02	22.33	7.05	1.23
C0176-029-2250-M	0.176	4.47	0.029	0.74	2.250	57.15	1.419	36.03	1.336	33.92	6.36	28.27	7.65	1.34	C0176-029-2250-S	1.495	37.97	5.02	22.33	6.65	1.16
C0176-029-2375-M	0.176	4.47	0.029	0.74	2.375	60.33	1.496	38.01	1.408	35.77	6.36	28.27	7.23	1.27	C0176-029-2375-S	1.577	40.05	5.02	22.33	6.29	1.10
C0176-029-2500-M	0.176	4.47	0.029	0.74	2.500	63.50	1.574	39.98	1.481	37.62	6.36	28.27	6.86	1.20	C0176-029-2500-S	1.659	42.13	5.02	22.33	5.97	1.04
C0176-029-2625-M	0.176	4.47	0.029	0.74	2.625	66.68	1.651	41.95	1.554	39.46	6.36	28.27	6.53	1.14	C0176-029-2625-S	1.741	44.21	5.02	22.33	5.68	0.99
C0176-029-2750-M	0.176	4.47	0.029	0.74	2.750	69.85	1.729	43.92	1.626	41.31	6.36	28.27	6.23	1.09	C0176-029-2750-S	1.823	46.29	5.02	22.33	5.41	0.95
C0176-029-2875-M	0.176	4.47	0.029	0.74	2.875	73.03	1.807	45.89	1.699	43.16	6.36	28.27	5.95	1.04	C0176-029-2875-S	1.905	48.38	5.02	22.33	5.17	0.90
C0176-030-0313-M	0.176	4.47	0.030	0.76	0.313	7.94	0.222	5.64	0.216	5.49	6.97	31.00	76.92	13.46	C0176-030-0313-S	0.230	5.85	5.51	24.51	66.89	11.71
C0176-030-0375-M	0.176	4.47	0.030	0.76	0.375	9.53	0.262	6.65	0.254	6.45	6.97	31.00	61.66	10.79	C0176-030-0375-S	0.272	6.91	5.51	24.51	53.62	9.38
C0176-030-0438-M	0.176	4.47	0.030	0.76	0.438	11.11	0.302	7.67	0.292	7.42	6.97	31.00	51.45	9.00	C0176-030-0438-S	0.314	7.98	5.51	24.51	44.74	7.83
C0176-030-0500-M	0.176	4.47	0.030	0.76	0.500	12.70	0.342	8.69	0.330	8.38	6.97	31.00	44.14	7.73	C0176-030-0500-S	0.356	9.05	5.51	24.51	38.39	6.72
C0176-030-0563-M	0.176	4.47	0.030	0.76	0.563	14.29	0.382	9.71	0.368	9.34	6.97	31.00	38.65	6.76	C0176-030-0563-S	0.399	10.12	5.51	24.51	33.61	5.88
C0176-030-0625-M	0.176	4.47	0.030	0.76	0.625	15.88	0.422	10.73	0.406	10.31	6.97	31.00	34.38	6.02	C0176-030-0625-S	0.441	11.19	5.51	24.51	29.89	5.23
C0176-030-0688-M	0.176	4.47	0.030	0.76	0.688	17.46	0.462	11.74	0.444	11.27	6.97	31.00	30.95	5.42	C0176-030-0688-S	0.483	12.26	5.51	24.51	26.92	4.71
C0176-030-0750-M	0.176	4.47	0.030	0.76	0.750	19.05	0.502	12.76	0.482	12.23	6.97	31.00	28.15	4.93	C0176-030-0750-S	0.525	13.33	5.51	24.51	24.48	4.28
C0176-030-0813-M	0.176	4.47	0.030	0.76	0.813	20.64	0.542	13.78	0.520	13.20	6.97	31.00	25.81	4.52	C0176-030-0813-S	0.567	14.40	5.51	24.51	22.44	3.93
C0176-030-0875-M	0.176	4.47	0.030	0.76	0.875	22.23	0.583	14.80	0.558	14.16	6.97	31.00	23.83	4.17	C0176-030-0875-S	0.609	15.47	5.51	24.51	20.72	3.63
C0176-030-0938-M	0.176	4.47	0.030	0.76	0.938	23.81	0.623	15.82	0.595	15.12	6.97	31.00	22.14	3.87	C0176-030-0938-S	0.651	16.54	5.51	24.51	19.25	3.37
C0176-030-1000-M	0.176	4.47	0.030	0.76	1.000	25.40	0.663	16.83	0.633	16.09	6.97	31.00	20.66	3.62	C0176-030-1000-S	0.693	17.61	5.51	24.51	17.97	3.14
C0176-030-1125-M	0.176	4.47	0.030	0.76	1.125	28.58	0.743	18.87	0.709	18.01	6.97	31.00	18.24	3.19	C0176-030-1125-S	0.778	19.75	5.51	24.51	15.86	2.78
C0176-030-1250-M	0.176	4.47	0.030	0.76	1.250	31.75	0.823	20.90	0.785	19.94	6.97	31.00	16.32	2.86	C0176-030-1250-S	0.862	21.89	5.51	24.51	14.19	2.48
C0176-030-1375-M	0.176	4.47	0.030	0.76	1.375	34.93	0.903	22.94	0.861	21.87	6.97	31.00	14.77	2.58	C0176-030-1375-S	0.946	24.03	5.51	24.51	12.84	2.25
C0176-030-1500-M	0.176	4.47	0.030	0.76	1.500	38.10	0.983	24.98	0.937	23.79	6.97	31.00	13.49	2.36	C0176-030-1500-S	1.030	26.17	5.51	24.51	11.73	2.05

Part Numbers with an "*" are squared and not ground. **Part Numbers in bold** represent the newly expanded Associated Spring RAYMOND compression spring offering.

MUSIC WIRE															STAINLESS STEEL					
Catalog #	Outside Diameter (OD)		Wire Diameter (d)		Free Length (L) Approx		Load Length (L_1)		Solid Height (Sh) Approx		Load (P) at L_1		Spring Rate (R)		Catalog #	Load Length (L_1)		Load (P) at L_1		Spring Rate (R)	
	in	mm	in	mm	in	mm	in	mm	in	mm	lb	N	lb/in	N/mm		in	mm	lb	N	lb/in	N/mm
C0176-030-1625-M	0.176	4.47	0.030	0.76	1.625	41.28	1.063	27.01	1.013	25.72	6.97	31.00	12.41	2.17	**C0176-030-1625-S**	1.114	28.31	5.51	24.51	10.79	1.89
C0176-030-1750-M	0.176	4.47	0.030	0.76	1.750	44.45	1.144	29.05	1.088	27.65	6.97	31.00	11.49	2.01	**C0176-030-1750-S**	1.199	30.45	5.51	24.51	9.99	1.75
C0176-030-1875-M	0.176	4.47	0.030	0.76	1.875	47.63	1.224	31.08	1.164	29.57	6.97	31.00	10.70	1.87	**C0176-030-1875-S**	1.283	32.58	5.51	24.51	9.31	1.63
C0176-030-2000-M	0.176	4.47	0.030	0.76	2.000	50.80	1.304	33.12	1.240	31.50	6.97	31.00	10.01	1.75	**C0176-030-2000-S**	1.367	34.72	5.51	24.51	8.71	1.52
C0176-030-2125-M	0.176	4.47	0.030	0.76	2.125	53.98	1.384	35.16	1.316	33.43	6.97	31.00	9.41	1.65	**C0176-030-2125-S**	1.451	36.86	5.51	24.51	8.18	1.43
C0176-030-2250-M	0.176	4.47	0.030	0.76	2.250	57.15	1.464	37.19	1.392	35.35	6.97	31.00	8.87	1.55	**C0176-030-2250-S**	1.536	39.00	5.51	24.51	7.71	1.35
C0176-030-2375-M	0.176	4.47	0.030	0.76	2.375	60.33	1.544	39.23	1.468	37.28	6.97	31.00	8.39	1.47	**C0176-030-2375-S**	1.620	41.14	5.51	24.51	7.30	1.28
C0176-030-2500-M	0.176	4.47	0.030	0.76	2.500	63.50	1.625	41.26	1.544	39.21	6.97	31.00	7.96	1.39	**C0176-030-2500-S**	1.704	43.28	5.51	24.51	6.92	1.21
C0176-030-2625-M	0.176	4.47	0.030	0.76	2.625	66.68	1.705	43.30	1.619	41.13	6.97	31.00	7.57	1.33	**C0176-030-2625-S**	1.788	45.42	5.51	24.51	6.58	1.15
C0176-030-2750-M	0.176	4.47	0.030	0.76	2.750	69.85	1.785	45.33	1.695	43.06	6.97	31.00	7.22	1.26	**C0176-030-2750-S**	1.872	47.56	5.51	24.51	6.28	1.10
C0176-030-2875-M	0.176	4.47	0.030	0.76	2.875	73.03	1.865	47.37	1.771	44.98	6.97	31.00	6.90	1.21	**C0176-030-2875-S**	1.957	49.70	5.51	24.51	6.00	1.05
C0176-032-0313-M	0.176	4.47	0.032	0.81	0.313	7.94	0.233	5.92	0.230	5.84	8.30	36.91	104.29	18.25	**C0176-032-0313-S**	0.240	6.10	6.57	29.23	90.68	15.87
C0176-032-0375-M	0.176	4.47	0.032	0.81	0.375	9.53	0.275	7.00	0.271	6.88	8.30	36.91	83.33	14.58	**C0176-032-0375-S**	0.284	7.22	6.57	29.23	72.46	12.68
C0176-032-0438-M	0.176	4.47	0.032	0.81	0.438	11.11	0.318	8.08	0.312	7.92	8.30	36.91	69.38	12.14	**C0176-032-0438-S**	0.329	8.35	6.57	29.23	60.33	10.56
C0176-032-0500-M	0.176	4.47	0.032	0.81	0.500	12.70	0.360	9.15	0.353	8.96	8.30	36.91	59.44	10.40	**C0176-032-0500-S**	0.373	9.47	6.57	29.23	51.68	9.04
C0176-032-0563-M	0.176	4.47	0.032	0.81	0.563	14.29	0.403	10.23	0.393	9.99	8.30	36.91	51.99	9.10	**C0176-032-0563-S**	0.417	10.60	6.57	29.23	45.20	7.91
C0176-032-0625-M	0.176	4.47	0.032	0.81	0.625	15.88	0.445	11.31	0.434	11.03	8.30	36.91	46.19	8.08	**C0176-032-0625-S**	0.461	11.72	6.57	29.23	40.17	7.03
C0176-032-0688-M	0.176	4.47	0.032	0.81	0.688	17.46	0.488	12.39	0.475	12.07	8.30	36.91	41.56	7.27	**C0176-032-0688-S**	0.506	12.84	6.57	29.23	36.14	6.32
C0176-032-0750-M	0.176	4.47	0.032	0.81	0.750	19.05	0.530	13.47	0.516	13.11	8.30	36.91	37.78	6.61	**C0176-032-0750-S**	0.550	13.97	6.57	29.23	32.85	5.75
C0176-032-0813-M	0.176	4.47	0.032	0.81	0.813	20.64	0.573	14.55	0.557	14.15	8.30	36.91	34.62	6.06	**C0176-032-0813-S**	0.594	15.09	6.57	29.23	30.11	5.27
C0176-032-0875-M	0.176	4.47	0.032	0.81	0.875	22.23	0.615	15.63	0.598	15.19	8.30	36.91	31.95	5.59	**C0176-032-0875-S**	0.639	16.22	6.57	29.23	27.79	4.86
C0176-032-0938-M	0.176	4.47	0.032	0.81	0.938	23.81	0.658	16.71	0.639	16.23	8.30	36.91	29.67	5.19	**C0176-032-0938-S**	0.683	17.34	6.57	29.23	25.80	4.52
C0176-032-1000-M	0.176	4.47	0.032	0.81	1.000	25.40	0.700	17.79	0.680	17.27	8.30	36.91	27.69	4.85	**C0176-032-1000-S**	0.727	18.47	6.57	29.23	24.08	4.21
C0176-032-1125-M	0.176	4.47	0.032	0.81	1.125	28.58	0.785	19.95	0.762	19.35	8.30	36.91	24.43	4.27	**C0176-032-1125-S**	0.816	20.72	6.57	29.23	21.24	3.72
C0176-032-1250-M	0.176	4.47	0.032	0.81	1.250	31.75	0.870	22.11	0.843	21.42	8.30	36.91	21.85	3.82	**C0176-032-1250-S**	0.904	22.97	6.57	29.23	19.00	3.33
C0176-032-1375-M	0.176	4.47	0.032	0.81	1.375	34.93	0.955	24.26	0.925	23.50	8.30	36.91	19.77	3.46	**C0176-032-1375-S**	0.993	25.22	6.57	29.23	17.19	3.01
C0176-032-1500-M	0.176	4.47	0.032	0.81	1.500	38.10	1.040	26.42	1.007	25.58	8.30	36.91	18.05	3.16	**C0176-032-1500-S**	1.081	27.46	6.57	29.23	15.69	2.75
C0176-032-1625-M	0.176	4.47	0.032	0.81	1.625	41.28	1.125	28.58	1.089	27.66	8.30	36.91	16.60	2.91	**C0176-032-1625-S**	1.170	29.71	6.57	29.23	14.44	2.53
C0176-032-1750-M	0.176	4.47	0.032	0.81	1.750	44.45	1.210	30.74	1.171	29.74	8.30	36.91	15.37	2.69	**C0176-032-1750-S**	1.258	31.96	6.57	29.23	13.37	2.34
C0176-032-1875-M	0.176	4.47	0.032	0.81	1.875	47.63	1.295	32.90	1.253	31.81	8.30	36.91	14.31	2.50	**C0176-032-1875-S**	1.347	34.21	6.57	29.23	12.44	2.18
C0176-032-2000-M	0.176	4.47	0.032	0.81	2.000	50.80	1.380	35.06	1.334	33.89	8.30	36.91	13.39	2.34	**C0176-032-2000-S**	1.435	36.46	6.57	29.23	11.64	2.04
C0176-032-2125-M	0.176	4.47	0.032	0.81	2.125	53.98	1.465	37.21	1.416	35.97	8.30	36.91	12.57	2.20	**C0176-032-2125-S**	1.524	38.71	6.57	29.23	10.93	1.91
C0176-032-2250-M	0.176	4.47	0.032	0.81	2.250	57.15	1.550	39.37	1.498	38.05	8.30	36.91	11.86	2.07	**C0176-032-2250-S**	1.613	40.96	6.57	29.23	10.31	1.80
C0176-032-2375-M	0.176	4.47	0.032	0.81	2.375	60.33	1.635	41.53	1.580	40.13	8.30	36.91	11.21	1.96	**C0176-032-2375-S**	1.701	43.21	6.57	29.23	9.75	1.71
C0176-032-2500-M	0.176	4.47	0.032	0.81	2.500	63.50	1.720	43.69	1.662	42.20	8.30	36.91	10.64	1.86	**C0176-032-2500-S**	1.790	45.46	6.57	29.23	9.25	1.62
C0176-032-2625-M	0.176	4.47	0.032	0.81	2.625	66.68	1.805	45.85	1.743	44.28	8.30	36.91	10.12	1.77	**C0176-032-2625-S**	1.878	47.71	6.57	29.23	8.80	1.54
C0176-032-2750-M	0.176	4.47	0.032	0.81	2.750	69.85	1.890	48.01	1.825	46.36	8.30	36.91	9.65	1.69	**C0176-032-2750-S**	1.967	49.96	6.57	29.23	8.39	1.47
C0176-032-2875-M	0.176	4.47	0.032	0.81	2.875	73.03	1.975	50.17	1.907	48.44	8.30	36.91	9.22	1.61	**C0176-032-2875-S**	2.055	52.21	6.57	29.23	8.02	1.40
C0176-035-0313-M	0.176	4.47	0.035	0.89	0.313	7.94	0.258	6.54	0.248	6.29	8.92	39.67	162.23	28.39	**C0176-035-0313-S**	0.253	6.43	8.37	37.22	141.07	24.69
C0176-035-0375-M	0.176	4.47	0.035	0.89	0.375	9.53	0.293	7.45	0.293	7.44	10.55	46.91	128.98	22.57	**C0176-035-0375-S**	0.300	7.63	8.37	37.22	112.16	19.63
C0176-035-0438-M	0.176	4.47	0.035	0.89	0.438	11.11	0.339	8.61	0.338	8.58	10.55	46.91	107.05	18.73	**C0176-035-0438-S**	0.348	8.83	8.37	37.22	93.08	16.29
C0176-035-0500-M	0.176	4.47	0.035	0.89	0.500	12.70	0.385	9.77	0.383	9.72	10.55	46.91	91.49	16.01	**C0176-035-0500-S**	0.395	10.03	8.37	37.22	79.55	13.92
C0176-035-0563-M	0.176	4.47	0.035	0.89	0.563	14.29	0.430	10.93	0.428	10.86	10.55	46.91	79.88	13.98	**C0176-035-0563-S**	0.442	11.23	8.37	37.22	69.46	12.16
C0176-035-0625-M	0.176	4.47	0.035	0.89	0.625	15.88	0.476	12.10	0.472	12.00	10.55	46.91	70.88	12.40	**C0176-035-0625-S**	0.489	12.43	8.37	37.22	61.64	10.79
C0176-035-0688-M	0.176	4.47	0.035	0.89	0.688	17.46	0.522	13.26	0.517	13.14	10.55	46.91	63.71	11.15	**C0176-035-0688-S**	0.536	13.63	8.37	37.22	55.40	9.70
C0176-035-0750-M	0.176	4.47	0.035	0.89	0.750	19.05	0.568	14.42	0.562	14.28	10.55	46.91	57.85	10.12	**C0176-035-0750-S**	0.584	14.83	8.37	37.22	50.31	8.80
C0176-035-0813-M	0.176	4.47	0.035	0.89	0.813	20.64	0.613	15.58	0.607	15.42	10.55	46.91	52.98	9.27	**C0176-035-0813-S**	0.631	16.02	8.37	37.22	46.07	8.06
C0176-035-0875-M	0.176	4.47	0.035	0.89	0.875	22.23	0.659	16.74	0.652	16.57	10.55	46.91	48.87	8.55	**C0176-035-0875-S**	0.678	17.22	8.37	37.22	42.50	7.44
C0176-035-0938-M	0.176	4.47	0.035	0.89	0.938	23.81	0.705	17.91	0.697	17.71	10.55	46.91	45.35	7.94	**C0176-035-0938-S**	0.725	18.42	8.37	37.22	39.43	6.90
C0176-035-1000-M	0.176	4.47	0.035	0.89	1.000	25.40	0.751	19.07	0.742	18.85	10.55	46.91	42.30	7.40	**C0176-035-1000-S**	0.773	19.62	8.37	37.22	36.78	6.44
C0176-035-1125-M	0.176	4.47	0.035	0.89	1.125	28.58	0.842	21.39	0.832	21.13	10.55	46.91	37.29	6.53	**C0176-035-1125-S**	0.867	22.02	8.37	37.22	32.43	5.68
C0176-035-1250-M	0.176	4.47	0.035	0.89	1.250	31.75	0.934	23.72	0.922	23.41	10.55	46.91	33.34	5.83	**C0176-035-1250-S**	0.961	24.42	8.37	37.22	28.99	5.07
C0176-035-1375-M	0.176	4.47	0.035	0.89	1.375	34.93	1.025	26.04	1.012	25.70	10.55	46.91	30.15	5.28	**C0176-035-1375-S**	1.056	26.82	8.37	37.22	26.21	4.59
C0176-035-1500-M	0.176	4.47	0.035	0.89	1.500	38.10	1.117	28.36	1.101	27.98	10.55	46.91	27.51	4.81	**C0176-035-1500-S**	1.150	29.22	8.37	37.22	23.92	4.19
C0176-035-1625-M	0.176	4.47	0.035	0.89	1.625	41.28	1.208	30.69	1.191	30.26	10.55	46.91	25.30	4.43	**C0176-035-1625-S**	1.245	31.61	8.37	37.22	22.00	3.85
C0176-035-1750-M	0.176	4.47	0.035	0.89	1.750	44.45	1.300	33.01	1.281	32.54	10.55	46.91	23.42	4.10	**C0176-035-1750-S**	1.339	34.01	8.37	37.22	20.36	3.56
C0176-035-1875-M	0.176	4.47	0.035	0.89	1.875	47.63	1.391	35.34	1.371	34.82	10.55	46.91	21.80	3.81	**C0176-035-1875-S**	1.433	36.41	8.37	37.22	18.95	3.32
C0176-035-2000-M	0.176	4.47	0.035	0.89	2.000	50.80	1.483	37.66	1.461	37.11	10.55	46.91	20.38	3.57	**C0176-035-2000-S**	1.528	38.81	8.37	37.22	17.72	3.10
C0176-035-2125-M	0.176	4.47	0.035	0.89	2.125	53.98	1.574	39.98	1.551	39.39	10.55	46.91	19.14	3.35	**C0176-035-2125-S**	1.622	41.21	8.37	37.22	16.65	2.91
C0176-035-2250-M	0.176	4.47	0.035	0.89	2.250	57.15	1.666	42.31	1.641	41.67	10.55	46.91	18.05	3.16	**C0176-035-2250-S**	1.717	43.61	8.37	37.22	15.69	2.75
C0176-035-2375-M	0.176	4.47	0.035	0.89	2.375	60.33	1.757	44.63	1.730	43.95	10.55	46.91	17.07	2.99	**C0176-035-2375-S**	1.811	46.00	8.37	37.22	14.84	2.60
C0176-035-2500-M	0.176	4.47	0.035	0.89	2.500	63.50	1.849	46.95	1.820	46.24	10.55	46.91	16.19	2.83	**C0176-035-2500-S**	1.906	48.40	8.37	37.22	14.08	2.46
C0176-035-2625-M	0.176	4.47	0.035	0.89	2.625	66.68	1.940	49.28	1.910	48.52	10.55	46.91	15.40	2.69	**C0176-035-2625-S**	2.000	50.80	8.37	37.22	13.39	2.34
C0176-035-2750-M	0.176	4.47	0.035	0.89	2.750	69.85	2.032	51.60	2.000	50.80	10.55	46.91	14.68	2.57	**C0176-035-2750-S**	2.094	53.20	8.37	37.22	12.76	2.23

FOR INFORMATION ON ALTERNATIVE FINISHES, SEE PAGE 311

Part Numbers with an "*" are squared and not ground. **Part Numbers in bold** represent the newly expanded Associated Spring RAYMOND compression spring offering.

MUSIC WIRE															STAINLESS STEEL						
Catalog #	Outside Diameter (OD)		Wire Diameter (d)		Free Length (L) Approx		Load Length (L_1)		Solid Height (Sh) Approx		Load (P) at L_1		Spring Rate (R)		Catalog #	Load Length (L_1)		Load (P) at L_1		Spring Rate (R)	
	in	mm	in	mm	in	mm	in	mm	in	mm	lb	N	lb/in	N/mm		in	mm	lb	N	lb/in	N/mm
D11200*	0.177	4.50	0.020	0.50	0.276	7.00	0.146	3.70	0.128	3.25	2.10	9.32	16.17	2.83	D21200*	0.146	3.70	1.74	7.76	13.49	2.36
D11210*	0.177	4.50	0.020	0.50	0.394	10.00	0.201	5.10	0.167	4.25	2.10	9.32	10.34	1.81	D21210*	0.201	5.10	1.74	7.76	8.63	1.51
D11220*	0.177	4.50	0.020	0.50	0.591	15.00	0.280	7.10	0.226	5.75	2.10	9.32	6.69	1.17	D21220*	0.280	7.10	1.74	7.76	5.54	0.97
D11230*	0.177	4.50	0.020	0.50	0.846	21.50	0.386	9.80	0.305	7.75	2.10	9.32	4.51	0.79	D21230*	0.386	9.80	1.74	7.76	3.77	0.66
D11240*	0.177	4.50	0.020	0.50	1.220	31.00	0.551	14.00	0.423	10.75	2.10	9.32	3.09	0.54	D21240*	0.551	14.00	1.74	7.76	2.57	0.45
C0180-010-0250-M*	**0.180**	**4.57**	**0.010**	**0.25**	**0.250**	**6.35**	**0.083**	**2.10**	**0.044**	**1.12**	**0.33**	**1.47**	**1.97**	**0.34**	**C0180-010-0250-S***	**0.106**	**2.68**	**0.24**	**1.05**	**1.64**	**0.29**
C0180-010-0313-M*	**0.180**	**4.57**	**0.010**	**0.25**	**0.313**	**7.95**	**0.098**	**2.48**	**0.049**	**1.25**	**0.33**	**1.47**	**1.53**	**0.27**	**C0180-010-0313-S***	**0.127**	**3.23**	**0.24**	**1.05**	**1.27**	**0.22**
C0180-010-0375-M*	**0.180**	**4.57**	**0.010**	**0.25**	**0.375**	**9.53**	**0.114**	**2.88**	**0.054**	**1.37**	**0.33**	**1.47**	**1.26**	**0.22**	**C0180-010-0375-S***	**0.149**	**3.79**	**0.24**	**1.05**	**1.05**	**0.18**
C0180-010-0438-M*	**0.180**	**4.57**	**0.010**	**0.25**	**0.438**	**11.13**	**0.127**	**3.23**	**0.059**	**1.50**	**0.33**	**1.47**	**1.06**	**0.19**	**C0180-010-0438-S***	**0.170**	**4.31**	**0.24**	**1.05**	**0.88**	**0.15**
C0180-010-0500-M*	**0.180**	**4.57**	**0.010**	**0.25**	**0.500**	**12.70**	**0.142**	**3.60**	**0.064**	**1.62**	**0.33**	**1.47**	**0.92**	**0.16**	**C0180-010-0500-S***	**0.191**	**4.85**	**0.24**	**1.05**	**0.77**	**0.13**
C0180-010-0563-M*	**0.180**	**4.57**	**0.010**	**0.25**	**0.563**	**14.30**	**0.156**	**3.97**	**0.069**	**1.75**	**0.33**	**1.47**	**0.81**	**0.14**	**C0180-010-0563-S***	**0.212**	**5.38**	**0.24**	**1.05**	**0.67**	**0.12**
C0180-010-0625-M*	**0.180**	**4.57**	**0.010**	**0.25**	**0.625**	**15.88**	**0.174**	**4.41**	**0.074**	**1.87**	**0.33**	**1.47**	**0.73**	**0.13**	**C0180-010-0625-S***	**0.235**	**5.98**	**0.24**	**1.05**	**0.61**	**0.11**
C0180-010-0750-M*	**0.180**	**4.57**	**0.010**	**0.25**	**0.750**	**19.05**	**0.201**	**5.10**	**0.083**	**2.10**	**0.33**	**1.47**	**0.60**	**0.11**	**C0180-010-0750-S***	**0.276**	**7.01**	**0.24**	**1.05**	**0.50**	**0.09**
C0180-010-0875-M*	**0.180**	**4.57**	**0.010**	**0.25**	**0.875**	**22.23**	**0.229**	**5.82**	**0.092**	**2.33**	**0.33**	**1.47**	**0.51**	**0.09**	**C0180-010-0875-S***	**0.317**	**8.06**	**0.24**	**1.05**	**0.42**	**0.07**
C0180-010-1000-M*	**0.180**	**4.57**	**0.010**	**0.25**	**1.000**	**25.40**	**0.268**	**6.80**	**0.100**	**2.53**	**0.33**	**1.47**	**0.45**	**0.08**	**C0180-010-1000-S***	**0.368**	**9.34**	**0.24**	**1.05**	**0.37**	**0.06**
C0180-010-1250-M*	**0.180**	**4.57**	**0.010**	**0.25**	**1.250**	**31.75**	**0.335**	**8.50**	**0.117**	**2.97**	**0.33**	**1.47**	**0.36**	**0.06**	**C0180-010-1250-S***	**0.460**	**11.68**	**0.24**	**1.05**	**0.30**	**0.05**
C0180-010-1500-M*	**0.180**	**4.57**	**0.010**	**0.25**	**1.500**	**38.10**	**0.364**	**9.24**	**0.137**	**3.49**	**0.33**	**1.47**	**0.29**	**0.05**	**C0180-010-1500-S***	**0.519**	**13.18**	**0.24**	**1.05**	**0.24**	**0.04**
C0180-012-0250-M*	0.180	4.57	0.012	0.31	0.250	6.35	0.101	2.57	0.057	1.45	0.54	2.40	3.60	0.63	C0180-012-0250-S*	0.135	3.42	0.35	1.54	3.00	0.53
C0180-012-0310-M*	0.180	4.57	0.012	0.31	0.310	7.87	0.124	3.15	0.062	1.57	0.54	2.40	2.90	0.51	C0180-012-0310-S*	0.167	4.24	0.35	1.54	2.42	0.42
C0180-012-0380-M*	0.180	4.57	0.012	0.31	0.380	9.65	0.145	3.68	0.069	1.75	0.54	2.40	2.30	0.40	C0180-012-0380-S*	0.200	5.07	0.35	1.54	1.92	0.34
C0180-012-0440-M*	0.180	4.57	0.012	0.31	0.440	11.18	0.170	4.32	0.074	1.88	0.54	2.40	2.00	0.35	C0180-012-0440-S*	0.233	5.91	0.35	1.54	1.67	0.29
C0180-012-0500-M*	0.180	4.57	0.012	0.31	0.500	12.70	0.182	4.62	0.080	2.03	0.54	2.40	1.70	0.30	C0180-012-0500-S*	0.256	6.50	0.35	1.54	1.42	0.25
C0180-012-0560-M*	0.180	4.57	0.012	0.31	0.560	14.22	0.200	5.08	0.085	2.16	0.54	2.40	1.50	0.26	C0180-012-0560-S*	0.284	7.20	0.35	1.54	1.25	0.22
C0180-012-0620-M*	0.180	4.57	0.012	0.31	0.620	15.75	0.234	5.94	0.091	2.31	0.54	2.40	1.40	0.25	C0180-012-0620-S*	0.324	8.23	0.35	1.54	1.17	0.20
C0180-012-0690-M*	0.180	4.57	0.012	0.31	0.690	17.53	0.240	6.10	0.097	2.46	0.54	2.40	1.20	0.21	C0180-012-0690-S*	0.344	8.75	0.35	1.54	1.00	0.18
C0180-012-0750-M*	0.180	4.57	0.012	0.31	0.750	19.05	0.259	6.58	0.103	2.62	0.54	2.40	1.10	0.19	C0180-012-0750-S*	0.373	9.48	0.35	1.54	0.92	0.16
C0180-012-0810-M*	0.180	4.57	0.012	0.31	0.810	20.57	0.270	6.86	0.109	2.77	0.54	2.40	1.00	0.18	C0180-012-0810-S*	0.395	10.04	0.35	1.54	0.83	0.15
C0180-012-0880-M*	0.180	4.57	0.012	0.31	0.880	22.35	0.340	8.64	0.115	2.92	0.54	2.40	1.00	0.18	C0180-012-0880-S*	0.465	11.82	0.35	1.54	0.83	0.15
C0180-012-0940-M*	0.180	4.57	0.012	0.31	0.940	23.88	0.336	8.53	0.121	3.07	0.54	2.40	0.90	0.16	C0180-012-0940-S*	0.479	12.17	0.35	1.54	0.75	0.13
C0180-012-1000-M*	0.180	4.57	0.012	0.31	1.000	25.40	0.325	8.26	0.126	3.20	0.54	2.40	0.80	0.14	C0180-012-1000-S*	0.482	12.24	0.35	1.54	0.67	0.12
C0180-012-1250-M*	0.180	4.57	0.012	0.31	1.250	31.75	0.479	12.17	0.149	3.78	0.54	2.40	0.70	0.12	C0180-012-1250-S*	0.658	16.70	0.35	1.54	0.58	0.10
C0180-012-1500-M*	0.180	4.57	0.012	0.31	1.500	38.10	0.600	15.24	0.172	4.37	0.54	2.40	0.60	0.11	C0180-012-1500-S*	0.809	20.55	0.35	1.54	0.50	0.09
C0180-013-0250-M*	**0.180**	**4.57**	**0.013**	**0.33**	**0.250**	**6.35**	**0.099**	**2.51**	**0.064**	**1.62**	**0.69**	**3.09**	**4.60**	**0.81**	**C0180-013-0250-S***	**0.118**	**2.99**	**0.51**	**2.26**	**3.83**	**0.67**
C0180-013-0313-M*	**0.180**	**4.57**	**0.013**	**0.33**	**0.313**	**7.95**	**0.114**	**2.91**	**0.073**	**1.86**	**0.69**	**3.09**	**3.50**	**0.61**	**C0180-013-0313-S***	**0.139**	**3.53**	**0.51**	**2.26**	**2.92**	**0.51**
C0180-013-0375-M*	**0.180**	**4.57**	**0.013**	**0.33**	**0.375**	**9.53**	**0.135**	**3.44**	**0.081**	**2.06**	**0.69**	**3.09**	**2.90**	**0.51**	**C0180-013-0375-S***	**0.165**	**4.19**	**0.51**	**2.26**	**2.42**	**0.42**
C0180-013-0438-M*	**0.180**	**4.57**	**0.013**	**0.33**	**0.438**	**11.13**	**0.149**	**3.77**	**0.091**	**2.30**	**0.69**	**3.09**	**2.40**	**0.42**	**C0180-013-0438-S***	**0.184**	**4.68**	**0.51**	**2.26**	**2.00**	**0.35**
C0180-013-0500-M*	**0.180**	**4.57**	**0.013**	**0.33**	**0.500**	**12.70**	**0.169**	**4.30**	**0.098**	**2.50**	**0.69**	**3.09**	**2.10**	**0.37**	**C0180-013-0500-S***	**0.210**	**5.34**	**0.51**	**2.26**	**1.75**	**0.31**
C0180-013-0563-M*	**0.180**	**4.57**	**0.013**	**0.33**	**0.563**	**14.30**	**0.197**	**5.01**	**0.104**	**2.65**	**0.69**	**3.09**	**1.90**	**0.33**	**C0180-013-0563-S***	**0.243**	**6.16**	**0.51**	**2.26**	**1.58**	**0.28**
C0180-013-0625-M*	**0.180**	**4.57**	**0.013**	**0.33**	**0.625**	**15.88**	**0.216**	**5.49**	**0.112**	**2.84**	**0.69**	**3.09**	**1.70**	**0.30**	**C0180-013-0625-S***	**0.267**	**6.78**	**0.51**	**2.26**	**1.42**	**0.25**
C0180-013-0750-M*	**0.180**	**4.57**	**0.013**	**0.33**	**0.750**	**19.05**	**0.254**	**6.45**	**0.127**	**3.22**	**0.69**	**3.09**	**1.40**	**0.25**	**C0180-013-0750-S***	**0.315**	**8.01**	**0.51**	**2.26**	**1.17**	**0.20**
C0180-013-0875-M*	**0.180**	**4.57**	**0.013**	**0.33**	**0.875**	**22.23**	**0.296**	**7.52**	**0.141**	**3.59**	**0.69**	**3.09**	**1.20**	**0.21**	**C0180-013-0875-S***	**0.368**	**9.34**	**0.51**	**2.26**	**1.00**	**0.18**
C0180-013-1000-M*	**0.180**	**4.57**	**0.013**	**0.33**	**1.000**	**25.40**	**0.305**	**7.75**	**0.161**	**4.10**	**0.69**	**3.09**	**1.00**	**0.18**	**C0180-013-1000-S***	**0.391**	**9.94**	**0.51**	**2.26**	**0.83**	**0.15**
C0180-013-1250-M*	**0.180**	**4.57**	**0.013**	**0.33**	**1.250**	**31.75**	**0.382**	**9.69**	**0.191**	**4.86**	**0.69**	**3.09**	**0.80**	**0.14**	**C0180-013-1250-S***	**0.489**	**12.43**	**0.51**	**2.26**	**0.67**	**0.12**
C0180-013-1500-M*	**0.180**	**4.57**	**0.013**	**0.33**	**1.500**	**38.10**	**0.507**	**12.89**	**0.213**	**5.41**	**0.69**	**3.09**	**0.70**	**0.12**	**C0180-013-1500-S***	**0.631**	**16.02**	**0.51**	**2.26**	**0.58**	**0.10**
C0180-014-0250-M*	0.180	4.57	0.014	0.36	0.250	6.35	0.115	2.92	0.069	1.75	0.84	3.74	6.20	1.09	C0180-014-0250-S*	0.146	3.70	0.54	2.40	5.17	0.90
C0180-014-0310-M*	0.180	4.57	0.014	0.36	0.310	7.87	0.139	3.53	0.076	1.93	0.84	3.74	4.90	0.86	C0180-014-0310-S*	0.178	4.52	0.54	2.40	4.08	0.71
C0180-014-0380-M*	0.180	4.57	0.014	0.36	0.380	9.65	0.165	4.19	0.085	2.16	0.84	3.74	3.90	0.68	C0180-014-0380-S*	0.214	5.44	0.54	2.40	3.25	0.57
C0180-014-0440-M*	0.180	4.57	0.014	0.36	0.440	11.18	0.193	4.90	0.092	2.34	0.84	3.74	3.40	0.60	C0180-014-0440-S*	0.250	6.35	0.54	2.40	2.83	0.50
C0180-014-0500-M*	0.180	4.57	0.014	0.36	0.500	12.70	0.210	5.33	0.100	2.54	0.84	3.74	2.90	0.51	C0180-014-0500-S*	0.277	7.04	0.54	2.40	2.42	0.42
C0180-014-0560-M*	0.180	4.57	0.014	0.36	0.560	14.22	0.238	6.05	0.107	2.72	0.84	3.74	2.60	0.46	C0180-014-0560-S*	0.311	7.91	0.54	2.40	2.17	0.38
C0180-014-0620-M*	0.180	4.57	0.014	0.36	0.620	15.75	0.255	6.48	0.114	2.90	0.84	3.74	2.30	0.40	C0180-014-0620-S*	0.339	8.61	0.54	2.40	1.92	0.34
C0180-014-0690-M*	0.180	4.57	0.014	0.36	0.690	17.53	0.289	7.34	0.123	3.12	0.84	3.74	2.10	0.37	C0180-014-0690-S*	0.382	9.71	0.54	2.40	1.75	0.31
C0180-014-0750-M*	0.180	4.57	0.014	0.36	0.750	19.05	0.308	7.82	0.130	3.30	0.84	3.74	1.90	0.33	C0180-014-0750-S*	0.410	10.41	0.54	2.40	1.58	0.28
C0180-014-0880-M*	0.180	4.57	0.014	0.36	0.880	22.35	0.355	9.02	0.146	3.71	0.84	3.74	1.60	0.28	C0180-014-0880-S*	0.476	12.09	0.54	2.40	1.33	0.23
C0180-014-1000-M*	0.180	4.57	0.014	0.36	1.000	25.40	0.400	10.16	0.161	4.09	0.84	3.74	1.40	0.25	C0180-014-1000-S*	0.538	13.67	0.54	2.40	1.17	0.20
C0180-014-1250-M*	0.180	4.57	0.014	0.36	1.250	31.75	0.486	12.34	0.191	4.85	0.84	3.74	1.10	0.19	C0180-014-1250-S*	0.662	16.82	0.54	2.40	0.92	0.16
C0180-014-1380-M*	0.180	4.57	0.014	0.36	1.380	35.05	0.540	13.72	0.207	5.26	0.84	3.74	1.00	0.18	C0180-014-1380-S*	0.733	18.63	0.54	2.40	0.83	0.15
C0180-014-1500-M*	0.180	4.57	0.014	0.36	1.500	38.10	0.567	14.40	0.222	5.64	0.84	3.74	0.90	0.16	C0180-014-1500-S*	0.782	19.85	0.54	2.40	0.75	0.13
C0180-016-0250-M*	0.180	4.57	0.016	0.41	0.250	6.35	0.109	2.77	0.080	2.03	1.25	5.56	8.90	1.56	C0180-016-0250-S*	0.144	3.65	0.79	3.51	7.41	1.30
C0180-016-0310-M*	0.180	4.57	0.016	0.41	0.310	7.87	0.143	3.63	0.087	2.21	1.25	5.56	7.50	1.31	C0180-016-0310-S*	0.184	4.67	0.79	3.51	6.25	1.09
C0180-016-0380-M*	0.180	4.57	0.016	0.41	0.380	9.65	0.169	4.29	0.100	2.54	1.25	5.56	5.90	1.03	C0180-016-0380-S*	0.219	5.57	0.79	3.51	4.92	0.86
C0180-016-0440-M*	0.180	4.57	0.016	0.41	0.440	11.18	0.187	4.75	0.112	2.84	1.25	5.56	4.90	0.86	C0180-016-0440-S*	0.247	6.27	0.79	3.51	4.08	0.71
C0180-016-0500-M*	0.180	4.57	0.016	0.41	0.500	12.70	0.205	5.21	0.124	3.15	1.25	5.56	4.20	0.74	C0180-016-0500-S*	0.274	6.97	0.79	3.51	3.50	0.61
C0180-016-0560-M*	0.180	4.57	0.016	0.41	0.560	14.22	0.223	5.66	0.136	3.45	1.25	5.56	3.70	0.65	C0180-016-0560-S*	0.304	7.72	0.79	3.51	3.08	0.54

Part Numbers with an "*" are squared and not ground. **Part Numbers in bold** represent the newly expanded Associated Spring RAYMOND compression spring offering.

MUSIC WIRE															STAINLESS STEEL						
Catalog #	Outside Diameter (OD)		Wire Diameter (d)		Free Length (L) Approx		Load Length (L_1)		Solid Height (Sh) Approx		Load (P) at L_1		Spring Rate (R)		Catalog #	Load Length (L_1)		Load (P) at L_1		Spring Rate (R)	
	in	mm	in	mm	in	mm	in	mm	in	mm	lb	N	lb/in	N/mm		in	mm	lb	N	lb/in	N/mm
C0180-016-0620-M*	0.180	4.57	0.016	0.41	0.620	15.75	0.254	6.45	0.144	3.66	1.25	5.56	3.40	0.60	C0180-016-0620-S*	0.341	8.67	0.79	3.51	2.83	0.50
C0180-016-0690-M*	0.180	4.57	0.016	0.41	0.690	17.53	0.283	7.19	0.155	3.94	1.25	5.56	3.10	0.54	C0180-016-0690-S*	0.384	9.76	0.79	3.51	2.58	0.45
C0180-016-0750-M*	0.180	4.57	0.016	0.41	0.750	19.05	0.300	7.62	0.167	4.24	1.25	5.56	2.80	0.49	C0180-016-0750-S*	0.412	10.46	0.79	3.51	2.33	0.41
C0180-016-0880-M*	0.180	4.57	0.016	0.41	0.880	22.35	0.380	9.65	0.185	4.70	1.25	5.56	2.50	0.44	C0180-016-0880-S*	0.501	12.73	0.79	3.51	2.08	0.36
C0180-016-1000-M*	0.180	4.57	0.016	0.41	1.000	25.40	0.432	10.97	0.204	5.18	1.25	5.56	2.20	0.39	C0180-016-1000-S*	0.569	14.46	0.79	3.51	1.83	0.32
C0180-016-1250-M*	0.180	4.57	0.016	0.41	1.250	31.75	0.515	13.08	0.245	6.22	1.25	5.56	1.70	0.30	C0180-016-1250-S*	0.693	17.60	0.79	3.51	1.42	0.25
C0180-016-1380-M*	0.180	4.57	0.016	0.41	1.380	35.05	0.600	15.24	0.266	6.76	1.25	5.56	1.60	0.28	C0180-016-1380-S*	0.788	20.01	0.79	3.51	1.33	0.23
C0180-016-1500-M*	0.180	4.57	0.016	0.41	1.500	38.10	0.607	15.42	0.285	7.24	1.25	5.56	1.40	0.25	C0180-016-1500-S*	0.823	20.91	0.79	3.51	1.17	0.20
C0180-016-1750-M*	0.180	4.57	0.016	0.41	1.750	44.45	0.708	17.98	0.326	8.28	1.25	5.56	1.20	0.21	C0180-016-1750-S*	0.961	24.40	0.79	3.51	1.00	0.18
C0180-018-0250-M*	0.180	4.57	0.018	0.46	0.250	6.35	0.120	3.05	0.094	2.39	1.76	7.83	13.50	2.36	C0180-018-0250-S*	0.153	3.88	1.09	4.87	11.25	1.97
C0180-018-0310-M*	0.180	4.57	0.018	0.46	0.310	7.87	0.156	3.96	0.103	2.62	1.76	7.83	11.40	2.00	C0180-018-0310-S*	0.195	4.95	1.09	4.87	9.50	1.66
C0180-018-0380-M*	0.180	4.57	0.018	0.46	0.380	9.65	0.190	4.83	0.116	2.95	1.76	7.83	9.30	1.63	C0180-018-0380-S*	0.239	6.06	1.09	4.87	7.75	1.36
C0180-018-0440-M*	0.180	4.57	0.018	0.46	0.440	11.18	0.215	5.46	0.130	3.30	1.76	7.83	7.80	1.37	C0180-018-0440-S*	0.271	6.90	1.09	4.87	6.50	1.14
C0180-018-0500-M*	0.180	4.57	0.018	0.46	0.500	12.70	0.239	6.07	0.144	3.66	1.76	7.83	6.70	1.17	C0180-018-0500-S*	0.304	7.72	1.09	4.87	5.58	0.98
C0180-018-0560-M*	0.180	4.57	0.018	0.46	0.560	14.22	0.252	6.40	0.162	4.11	1.76	7.83	5.70	1.00	C0180-018-0560-S*	0.329	8.37	1.09	4.87	4.75	0.83
C0180-018-0620-M*	0.180	4.57	0.018	0.46	0.620	15.75	0.276	7.01	0.175	4.45	1.76	7.83	5.10	0.89	C0180-018-0620-S*	0.362	9.20	1.09	4.87	4.25	0.74
C0180-018-0690-M*	0.180	4.57	0.018	0.46	0.690	17.53	0.310	7.87	0.189	4.80	1.76	7.83	4.60	0.81	C0180-018-0690-S*	0.404	10.27	1.09	4.87	3.83	0.67
C0180-018-0750-M*	0.180	4.57	0.018	0.46	0.750	19.05	0.323	8.20	0.207	5.26	1.76	7.83	4.10	0.72	C0180-018-0750-S*	0.429	10.91	1.09	4.87	3.42	0.60
C0180-018-0880-M*	0.180	4.57	0.018	0.46	0.880	22.35	0.404	10.26	0.227	5.77	1.76	7.83	3.70	0.65	C0180-018-0880-S*	0.525	13.33	1.09	4.87	3.08	0.54
C0180-018-1000-M*	0.180	4.57	0.018	0.46	1.000	25.40	0.450	11.43	0.252	6.40	1.76	7.83	3.20	0.56	C0180-018-1000-S*	0.589	14.97	1.09	4.87	2.67	0.47
C0180-018-1250-M*	0.180	4.57	0.018	0.46	1.250	31.75	0.573	14.55	0.303	7.70	1.76	7.83	2.60	0.46	C0180-018-1250-S*	0.744	18.91	1.09	4.87	2.17	0.38
C0180-018-1380-M*	0.180	4.57	0.018	0.46	1.380	35.05	0.615	15.62	0.330	8.38	1.76	7.83	2.30	0.40	C0180-018-1380-S*	0.809	20.54	1.09	4.87	1.92	0.34
C0180-018-1500-M*	0.180	4.57	0.018	0.46	1.500	38.10	0.662	16.81	0.355	9.02	1.76	7.83	2.10	0.37	C0180-018-1500-S*	0.874	22.20	1.09	4.87	1.75	0.31
C0180-018-1750-M*	0.180	4.57	0.018	0.46	1.750	44.45	0.772	19.61	0.406	10.31	1.76	7.83	1.80	0.32	C0180-018-1750-S*	1.020	25.90	1.09	4.87	1.50	0.26
C0180-020-0250-M*	0.180	4.57	0.020	0.51	0.250	6.35	0.142	3.61	0.113	2.87	2.29	10.19	21.20	3.71	C0180-020-0250-S*	0.167	4.23	1.47	6.55	17.66	3.09
C0180-020-0310-M*	0.180	4.57	0.020	0.51	0.310	7.87	0.171	4.34	0.128	3.25	2.29	10.19	16.50	2.89	C0180-020-0310-S*	0.203	5.15	1.47	6.55	13.75	2.41
C0180-020-0380-M*	0.180	4.57	0.020	0.51	0.380	9.65	0.205	5.21	0.146	3.71	2.29	10.19	13.10	2.29	C0180-020-0380-S*	0.245	6.22	1.47	6.55	10.91	1.91
C0180-020-0440-M*	0.180	4.57	0.020	0.51	0.440	11.18	0.234	5.94	0.161	4.09	2.29	10.19	11.10	1.94	C0180-020-0440-S*	0.281	7.13	1.47	6.55	9.25	1.62
C0180-020-0500-M*	0.180	4.57	0.020	0.51	0.500	12.70	0.263	6.68	0.176	4.47	2.29	10.19	9.70	1.70	C0180-020-0500-S*	0.318	8.07	1.47	6.55	8.08	1.41
C0180-020-0560-M*	0.180	4.57	0.020	0.51	0.560	14.22	0.292	7.42	0.191	4.85	2.29	10.19	8.60	1.51	C0180-020-0560-S*	0.354	9.00	1.47	6.55	7.16	1.25
C0180-020-0620-M*	0.180	4.57	0.020	0.51	0.620	15.75	0.321	8.15	0.207	5.26	2.29	10.19	7.70	1.35	C0180-020-0620-S*	0.390	9.92	1.47	6.55	6.41	1.12
C0180-020-0690-M*	0.180	4.57	0.020	0.51	0.690	17.53	0.355	9.02	0.224	5.69	2.29	10.19	6.80	1.19	C0180-020-0690-S*	0.430	10.92	1.47	6.55	5.66	0.99
C0180-020-0750-M*	0.180	4.57	0.020	0.51	0.750	19.05	0.384	9.75	0.239	6.07	2.29	10.19	6.30	1.10	C0180-020-0750-S*	0.469	11.92	1.47	6.55	5.25	0.92
C0180-020-0880-M*	0.180	4.57	0.020	0.51	0.880	22.35	0.447	11.35	0.272	6.91	2.29	10.19	5.30	0.93	C0180-020-0880-S*	0.546	13.88	1.47	6.55	4.42	0.77
C0180-020-1000-M*	0.180	4.57	0.020	0.51	1.000	25.40	0.505	12.83	0.302	7.67	2.29	10.19	4.60	0.81	C0180-020-1000-S*	0.616	15.64	1.47	6.55	3.83	0.67
C0180-020-1250-M*	0.180	4.57	0.020	0.51	1.250	31.75	0.626	15.90	0.366	9.30	2.29	10.19	3.70	0.65	C0180-020-1250-S*	0.772	19.61	1.47	6.55	3.08	0.54
C0180-020-1380-M*	0.180	4.57	0.020	0.51	1.380	35.05	0.689	17.50	0.398	10.11	2.29	10.19	3.30	0.58	C0180-020-1380-S*	0.844	21.45	1.47	6.55	2.75	0.48
C0180-020-1500-M*	0.180	4.57	0.020	0.51	1.500	38.10	0.737	18.72	0.429	10.90	2.29	10.19	3.00	0.53	C0180-020-1500-S*	0.911	23.13	1.47	6.55	2.50	0.44
C0180-020-1750-M*	0.180	4.57	0.020	0.51	1.750	44.45	0.868	22.05	0.492	12.50	2.29	10.19	2.60	0.46	C0180-020-1750-S*	1.070	27.18	1.47	6.55	2.17	0.38
C0180-022-0250-M	0.180	4.57	0.022	0.56	0.250	6.35	0.144	3.66	0.121	3.07	3.13	13.92	29.60	5.18	C0180-022-0250-S	0.172	4.37	1.92	8.54	24.66	4.31
C0180-022-0310-M	0.180	4.57	0.022	0.56	0.310	7.87	0.178	4.52	0.137	3.48	3.13	13.92	23.70	4.15	C0180-022-0310-S	0.213	5.40	1.92	8.54	19.74	3.45
C0180-022-0380-M	0.180	4.57	0.022	0.56	0.380	9.65	0.222	5.64	0.154	3.91	3.13	13.92	19.80	3.47	C0180-022-0380-S	0.264	6.69	1.92	8.54	16.49	2.89
C0180-022-0440-M	0.180	4.57	0.022	0.56	0.440	11.18	0.255	6.48	0.170	4.32	3.13	13.92	16.90	2.96	C0180-022-0440-S	0.304	7.71	1.92	8.54	14.08	2.46
C0180-022-0500-M	0.180	4.57	0.022	0.56	0.500	12.70	0.280	7.11	0.192	4.88	3.13	13.92	14.20	2.49	C0180-022-0500-S	0.338	8.58	1.92	8.54	11.83	2.07
C0180-022-0560-M	0.180	4.57	0.022	0.56	0.560	14.22	0.296	7.52	0.219	5.56	3.13	13.92	11.90	2.08	C0180-022-0560-S	0.366	9.30	1.92	8.54	9.91	1.73
C0180-022-0620-M	0.180	4.57	0.022	0.56	0.620	15.75	0.322	8.18	0.241	6.12	3.13	13.92	10.50	1.84	C0180-022-0620-S	0.400	10.17	1.92	8.54	8.75	1.53
C0180-022-0690-M	0.180	4.57	0.022	0.56	0.690	17.53	0.365	9.27	0.259	6.58	3.13	13.92	9.60	1.68	C0180-022-0690-S	0.450	11.43	1.92	8.54	8.00	1.40
C0180-022-0750-M	0.180	4.57	0.022	0.56	0.750	19.05	0.389	9.88	0.280	7.11	3.13	13.92	8.70	1.52	C0180-022-0750-S	0.485	12.32	1.92	8.54	7.25	1.27
C0180-022-0810-M	0.180	4.57	0.022	0.56	0.810	20.57	0.405	10.29	0.309	7.85	3.13	13.92	7.70	1.35	C0180-022-0810-S	0.511	12.97	1.92	8.54	6.41	1.12
C0180-022-0940-M	0.180	4.57	0.022	0.56	0.940	23.88	0.486	12.34	0.337	8.56	3.13	13.92	6.90	1.21	C0180-022-0940-S	0.606	15.39	1.92	8.54	5.75	1.01
C0180-022-1000-M	0.180	4.57	0.022	0.56	1.000	25.40	0.518	13.16	0.355	9.02	3.13	13.92	6.50	1.14	C0180-022-1000-S	0.645	16.39	1.92	8.54	5.42	0.95
C0180-022-1120-M	0.180	4.57	0.022	0.56	1.120	28.45	0.580	14.73	0.391	9.93	3.13	13.92	5.80	1.02	C0180-022-1120-S	0.722	18.35	1.92	8.54	4.83	0.85
C0180-022-1250-M	0.180	4.57	0.022	0.56	1.250	31.75	0.648	16.46	0.430	10.92	3.13	13.92	5.20	0.91	C0180-022-1250-S	0.807	20.49	1.92	8.54	4.33	0.76
C0180-022-1500-M	0.180	4.57	0.022	0.56	1.500	38.10	0.772	19.61	0.506	12.85	3.13	13.92	4.30	0.75	C0180-022-1500-S	0.964	24.48	1.92	8.54	3.58	0.63
C0180-022-1750-M	0.180	4.57	0.022	0.56	1.750	44.45	0.929	23.60	0.550	13.97	3.13	13.92	3.80	0.67	C0180-022-1750-S	1.143	29.04	1.92	8.54	3.17	0.55
C0180-024-0250-M	0.180	4.57	0.024	0.61	0.250	6.35	0.160	4.06	0.143	3.63	3.81	16.95	42.30	7.40	C0180-024-0250-S	0.180	4.57	2.47	10.98	35.24	6.17
C0180-024-0310-M	0.180	4.57	0.024	0.61	0.310	7.87	0.193	4.90	0.164	4.17	3.81	16.95	32.60	5.71	C0180-024-0310-S	0.219	5.57	2.47	10.98	27.16	4.75
C0180-024-0380-M	0.180	4.57	0.024	0.61	0.380	9.65	0.232	5.89	0.189	4.80	3.81	16.95	25.70	4.50	C0180-024-0380-S	0.265	6.72	2.47	10.98	21.41	3.75
C0180-024-0440-M	0.180	4.57	0.024	0.61	0.440	11.18	0.265	6.73	0.210	5.33	3.81	16.95	21.80	3.82	C0180-024-0440-S	0.304	7.72	2.47	10.98	18.16	3.18
C0180-024-0500-M	0.180	4.57	0.024	0.61	0.500	12.70	0.298	7.57	0.232	5.89	3.81	16.95	18.90	3.31	C0180-024-0500-S	0.343	8.72	2.47	10.98	15.74	2.76
C0180-024-0560-M	0.180	4.57	0.024	0.61	0.560	14.22	0.331	8.41	0.253	6.43	3.81	16.95	16.70	2.92	C0180-024-0560-S	0.383	9.72	2.47	10.98	13.91	2.43
C0180-024-0620-M	0.180	4.57	0.024	0.61	0.620	15.75	0.365	9.27	0.274	6.96	3.81	16.95	14.90	2.61	C0180-024-0620-S	0.421	10.70	2.47	10.98	12.41	2.17
C0180-024-0750-M	0.180	4.57	0.024	0.61	0.750	19.05	0.437	11.10	0.320	8.13	3.81	16.95	12.20	2.14	C0180-024-0750-S	0.507	12.88	2.47	10.98	10.16	1.78
C0180-024-0880-M	0.180	4.57	0.024	0.61	0.880	22.35	0.509	12.93	0.366	9.30	3.81	16.95	10.30	1.80	C0180-024-0880-S	0.592	15.05	2.47	10.98	8.58	1.50

FOR INFORMATION ON ALTERNATIVE FINISHES, SEE PAGE 311

Part Numbers with an "*" are squared and not ground. **Part Numbers in bold** represent the newly expanded Associated Spring RAYMOND compression spring offering.

(OD) 0.180 - 0.180

MUSIC WIRE															STAINLESS STEEL						
Catalog #	Outside Diameter (OD)		Wire Diameter (d)		Free Length (L) Approx		Load Length (L_1)		Solid Height (Sh) Approx		Load (P) at L_1		Spring Rate (R)		Catalog #	Load Length (L_1)		Load (P) at L_1		Spring Rate (R)	
	in	mm	in	mm	in	mm	in	mm	in	mm	lb	N	lb/in	N/mm		in	mm	lb	N	lb/in	N/mm
C0180-024-1000-M	0.180	4.57	0.024	0.61	1.000	25.40	0.575	14.61	0.408	10.36	3.81	16.95	9.00	1.58	C0180-024-1000-S	0.671	17.04	2.47	10.98	7.50	1.31
C0180-024-1120-M	0.180	4.57	0.024	0.61	1.120	28.45	0.641	16.28	0.450	11.43	3.81	16.95	8.00	1.40	C0180-024-1120-S	0.750	19.04	2.47	10.98	6.66	1.17
C0180-024-1250-M	0.180	4.57	0.024	0.61	1.250	31.75	0.713	18.11	0.496	12.60	3.81	16.95	7.10	1.24	C0180-024-1250-S	0.833	21.15	2.47	10.98	5.91	1.03
C0180-024-1500-M	0.180	4.57	0.024	0.61	1.500	38.10	0.852	21.64	0.585	14.86	3.81	16.95	5.90	1.03	C0180-024-1500-S	0.998	25.35	2.47	10.98	4.92	0.86
C0180-024-1750-M	0.180	4.57	0.024	0.61	1.750	44.45	0.990	25.15	0.673	17.09	3.81	16.95	5.00	0.88	C0180-024-1750-S	1.157	29.40	2.47	10.98	4.17	0.73
C0180-024-2000-M	0.180	4.57	0.024	0.61	2.000	50.80	1.129	28.68	0.761	19.33	3.81	16.95	4.40	0.77	C0180-024-2000-S	1.327	33.70	2.47	10.98	3.67	0.64
C0180-026-0250-M	0.180	4.57	0.026	0.66	0.250	6.35	0.163	4.14	0.149	3.78	5.03	22.37	57.80	10.12	C0180-026-0250-S	0.186	4.72	3.09	13.76	48.15	8.43
C0180-026-0310-M	0.180	4.57	0.026	0.66	0.310	7.87	0.203	5.16	0.168	4.27	5.03	22.37	47.00	8.23	C0180-026-0310-S	0.231	5.87	3.09	13.76	39.15	6.85
C0180-026-0380-M	0.180	4.57	0.026	0.66	0.380	9.65	0.246	6.25	0.195	4.95	5.03	22.37	37.50	6.56	C0180-026-0380-S	0.281	7.14	3.09	13.76	31.24	5.47
C0180-026-0440-M	0.180	4.57	0.026	0.66	0.440	11.18	0.279	7.09	0.221	5.61	5.03	22.37	31.20	5.46	C0180-026-0440-S	0.321	8.15	3.09	13.76	25.99	4.55
C0180-026-0500-M	0.180	4.57	0.026	0.66	0.500	12.70	0.312	7.92	0.247	6.27	5.03	22.37	26.80	4.69	C0180-026-0500-S	0.361	9.18	3.09	13.76	22.32	3.91
C0180-026-0560-M	0.180	4.57	0.026	0.66	0.560	14.22	0.346	8.79	0.272	6.91	5.03	22.37	23.50	4.11	C0180-026-0560-S	0.402	10.21	3.09	13.76	19.58	3.43
C0180-026-0620-M	0.180	4.57	0.026	0.66	0.620	15.75	0.379	9.63	0.298	7.57	5.03	22.37	20.90	3.66	C0180-026-0620-S	0.442	11.23	3.09	13.76	17.41	3.05
C0180-026-0690-M	0.180	4.57	0.026	0.66	0.690	17.53	0.422	10.72	0.324	8.23	5.03	22.37	18.80	3.29	C0180-026-0690-S	0.492	12.51	3.09	13.76	15.66	2.74
C0180-026-0750-M	0.180	4.57	0.026	0.66	0.750	19.05	0.455	11.56	0.352	8.94	5.03	22.37	17.00	2.98	C0180-026-0750-S	0.532	13.50	3.09	13.76	14.16	2.48
C0180-026-0810-M	0.180	4.57	0.026	0.66	0.810	20.57	0.488	12.40	0.377	9.58	5.03	22.37	15.60	2.73	C0180-026-0810-S	0.572	14.53	3.09	13.76	13.00	2.27
C0180-026-0880-M	0.180	4.57	0.026	0.66	0.880	22.35	0.532	13.51	0.403	10.24	5.03	22.37	14.40	2.52	C0180-026-0880-S	0.622	15.80	3.09	13.76	12.00	2.10
C0180-026-1000-M	0.180	4.57	0.026	0.66	1.000	25.40	0.588	14.94	0.461	11.71	5.03	22.37	12.20	2.14	C0180-026-1000-S	0.696	17.67	3.09	13.76	10.16	1.78
C0180-026-1120-M	0.180	4.57	0.026	0.66	1.120	28.45	0.654	16.61	0.509	12.93	5.03	22.37	10.80	1.89	C0180-026-1120-S	0.776	19.71	3.09	13.76	9.00	1.57
C0180-026-1250-M	0.180	4.57	0.026	0.66	1.250	31.75	0.731	18.57	0.562	14.27	5.03	22.37	9.70	1.70	C0180-026-1250-S	0.867	22.03	3.09	13.76	8.08	1.41
C0180-026-1500-M	0.180	4.57	0.026	0.66	1.500	38.10	0.871	22.12	0.663	16.84	5.03	22.37	8.00	1.40	C0180-026-1500-S	1.036	26.31	3.09	13.76	6.66	1.17
C0180-026-1750-M	0.180	4.57	0.026	0.66	1.750	44.45	1.010	25.65	0.764	19.41	5.03	22.37	6.80	1.19	C0180-026-1750-S	1.204	30.58	3.09	13.76	5.66	0.99
C0180-026-2000-M	0.180	4.57	0.026	0.66	2.000	50.80	1.147	29.13	0.865	21.97	5.03	22.37	5.90	1.03	C0180-026-2000-S	1.371	34.81	3.09	13.76	4.92	0.86
C0180-029-0250-M	0.180	4.57	0.029	0.74	0.250	6.35	0.181	4.60	0.172	4.37	6.43	28.60	93.10	16.29	C0180-029-0250-S	0.196	4.98	4.18	18.61	77.55	13.57
C0180-029-0310-M	0.180	4.57	0.029	0.74	0.310	7.87	0.219	5.56	0.208	5.28	6.43	28.60	71.00	12.43	C0180-029-0310-S	0.239	6.08	4.18	18.61	59.14	10.35
C0180-029-0380-M	0.180	4.57	0.029	0.74	0.380	9.65	0.264	6.71	0.241	6.12	6.43	28.60	55.50	9.71	C0180-029-0380-S	0.290	7.35	4.18	18.61	46.23	8.09
C0180-029-0440-M	0.180	4.57	0.029	0.74	0.440	11.18	0.303	7.70	0.270	6.86	6.43	28.60	46.80	8.19	C0180-029-0440-S	0.333	8.45	4.18	18.61	38.98	6.82
C0180-029-0500-M	0.180	4.57	0.029	0.74	0.500	12.70	0.341	8.66	0.299	7.59	6.43	28.60	40.50	7.09	C0180-029-0500-S	0.376	9.55	4.18	18.61	33.74	5.90
C0180-029-0560-M	0.180	4.57	0.029	0.74	0.560	14.22	0.380	9.65	0.327	8.31	6.43	28.60	35.60	6.23	C0180-029-0560-S	0.419	10.64	4.18	18.61	29.66	5.19
C0180-029-0620-M	0.180	4.57	0.029	0.74	0.620	15.75	0.418	10.62	0.356	9.04	6.43	28.60	31.80	5.57	C0180-029-0620-S	0.462	11.74	4.18	18.61	26.49	4.64
C0180-029-0690-M	0.180	4.57	0.029	0.74	0.690	17.53	0.463	11.76	0.390	9.91	6.43	28.60	28.30	4.95	C0180-029-0690-S	0.513	13.02	4.18	18.61	23.57	4.13
C0180-029-0750-M	0.180	4.57	0.029	0.74	0.750	19.05	0.501	12.73	0.418	10.62	6.43	28.60	25.80	4.52	C0180-029-0750-S	0.555	14.11	4.18	18.61	21.49	3.76
C0180-029-0810-M	0.180	4.57	0.029	0.74	0.810	20.57	0.540	13.72	0.447	11.35	6.43	28.60	23.80	4.17	C0180-029-0810-S	0.599	15.21	4.18	18.61	19.83	3.47
C0180-029-0880-M	0.180	4.57	0.029	0.74	0.880	22.35	0.584	14.83	0.481	12.22	6.43	28.60	21.80	3.82	C0180-029-0880-S	0.650	16.50	4.18	18.61	18.16	3.18
C0180-029-0940-M	0.180	4.57	0.029	0.74	0.940	23.88	0.623	15.82	0.509	12.93	6.43	28.60	20.30	3.55	C0180-029-0940-S	0.693	17.59	4.18	18.61	16.91	2.96
C0180-029-1000-M	0.180	4.57	0.029	0.74	1.000	25.40	0.661	16.79	0.538	13.67	6.43	28.60	19.00	3.33	C0180-029-1000-S	0.736	18.69	4.18	18.61	15.83	2.77
C0180-029-1120-M	0.180	4.57	0.029	0.74	1.120	28.45	0.738	18.75	0.596	15.14	6.43	28.60	16.80	2.94	C0180-029-1120-S	0.821	20.86	4.18	18.61	13.99	2.45
C0180-029-1250-M	0.180	4.57	0.029	0.74	1.250	31.75	0.821	20.85	0.658	16.71	6.43	28.60	15.00	2.63	C0180-029-1250-S	0.915	23.25	4.18	18.61	12.50	2.19
C0180-029-1380-M	0.180	4.57	0.029	0.74	1.380	35.05	0.905	22.99	0.720	18.29	6.43	28.60	13.50	2.36	C0180-029-1380-S	1.008	25.60	4.18	18.61	11.25	1.97
C0180-029-1500-M	0.180	4.57	0.029	0.74	1.500	38.10	0.982	24.94	0.778	19.76	6.43	28.60	12.40	2.17	C0180-029-1500-S	1.095	27.81	4.18	18.61	10.33	1.81
C0180-029-1750-M	0.180	4.57	0.029	0.74	1.750	44.45	1.142	29.01	0.897	22.78	6.43	28.60	10.60	1.86	C0180-029-1750-S	1.276	32.42	4.18	18.61	8.83	1.55
C0180-029-2000-M	0.180	4.57	0.029	0.74	2.000	50.80	1.302	33.07	1.017	25.83	6.43	28.60	9.20	1.61	C0180-029-2000-S	1.454	36.94	4.18	18.61	7.66	1.34
C0180-032-0310-M	0.180	4.57	0.032	0.81	0.310	7.87	0.238	6.05	0.206	5.23	8.83	39.28	122.70	21.47	C0180-032-0310-S	0.256	6.51	5.49	24.42	102.21	17.89
C0180-032-0380-M	0.180	4.57	0.032	0.81	0.380	9.65	0.289	7.34	0.240	6.10	8.83	39.28	97.00	16.98	C0180-032-0380-S	0.312	7.93	5.49	24.42	80.80	14.14
C0180-032-0440-M	0.180	4.57	0.032	0.81	0.440	11.18	0.326	8.28	0.280	7.11	8.83	39.28	77.50	13.56	C0180-032-0440-S	0.355	9.02	5.49	24.42	64.56	11.30
C0180-032-0500-M	0.180	4.57	0.032	0.81	0.500	12.70	0.364	9.25	0.319	8.10	8.83	39.28	64.90	11.36	C0180-032-0500-S	0.398	10.12	5.49	24.42	54.06	9.46
C0180-032-0560-M	0.180	4.57	0.032	0.81	0.560	14.22	0.410	10.41	0.343	8.71	8.83	39.28	58.90	10.31	C0180-032-0560-S	0.448	11.38	5.49	24.42	49.06	8.59
C0180-032-0620-M	0.180	4.57	0.032	0.81	0.620	15.75	0.448	11.38	0.382	9.70	8.83	39.28	51.30	8.98	C0180-032-0620-S	0.492	12.48	5.49	24.42	42.73	7.48
C0180-032-0690-M	0.180	4.57	0.032	0.81	0.690	17.53	0.504	12.80	0.406	10.31	8.83	39.28	47.50	8.31	C0180-032-0690-S	0.551	14.00	5.49	24.42	39.57	6.92
C0180-032-0750-M	0.180	4.57	0.032	0.81	0.750	19.05	0.536	13.61	0.456	11.58	8.83	39.28	41.30	7.23	C0180-032-0750-S	0.590	15.00	5.49	24.42	34.40	6.02
C0180-032-0810-M	0.180	4.57	0.032	0.81	0.810	20.57	0.573	14.55	0.496	12.60	8.83	39.28	37.30	6.53	C0180-032-0810-S	0.633	16.09	5.49	24.42	31.07	5.44
C0180-032-0880-M	0.180	4.57	0.032	0.81	0.880	22.35	0.616	15.65	0.543	13.79	8.83	39.28	33.50	5.86	C0180-032-0880-S	0.683	17.36	5.49	24.42	27.91	4.88
C0180-032-0940-M	0.180	4.57	0.032	0.81	0.940	23.88	0.658	16.71	0.576	14.63	8.83	39.28	31.30	5.48	C0180-032-0940-S	0.729	18.53	5.49	24.42	26.07	4.56
C0180-032-1000-M	0.180	4.57	0.032	0.81	1.000	25.40	0.700	17.78	0.608	15.44	8.83	39.28	29.40	5.15	C0180-032-1000-S	0.776	19.71	5.49	24.42	24.49	4.29
C0180-032-1120-M	0.180	4.57	0.032	0.81	1.120	28.45	0.775	19.69	0.677	17.20	8.83	39.28	25.60	4.48	C0180-032-1120-S	0.863	21.91	5.49	24.42	21.33	3.73
C0180-032-1250-M	0.180	4.57	0.032	0.81	1.250	31.75	0.863	21.92	0.748	19.00	8.83	39.28	22.80	3.99	C0180-032-1250-S	0.961	24.41	5.49	24.42	18.99	3.32
C0180-032-1380-M	0.180	4.57	0.032	0.81	1.380	35.05	0.951	24.16	0.819	20.80	8.83	39.28	20.60	3.61	C0180-032-1380-S	1.060	26.93	5.49	24.42	17.16	3.00
C0180-032-1500-M	0.180	4.57	0.032	0.81	1.500	38.10	1.030	26.16	0.885	22.48	8.83	39.28	18.80	3.29	C0180-032-1500-S	1.149	29.20	5.49	24.42	15.66	2.74
C0180-032-1750-M	0.180	4.57	0.032	0.81	1.750	44.45	1.202	30.53	1.023	25.98	8.83	39.28	16.10	2.82	C0180-032-1750-S	1.341	34.05	5.49	24.42	13.41	2.35
C0180-032-2000-M	0.180	4.57	0.032	0.81	2.000	50.80	1.369	34.77	1.160	29.46	8.83	39.28	14.00	2.45	C0180-032-2000-S	1.529	38.84	5.49	24.42	11.66	2.04
C0180-035-0380-M	0.180	4.57	0.035	0.89	0.380	9.65	0.302	7.67	0.286	7.26	10.74	47.77	137.00	23.98	C0180-035-0380-S	0.318	8.09	7.03	31.28	114.12	19.97
C0180-035-0440-M	0.180	4.57	0.035	0.89	0.440	11.18	0.346	8.79	0.321	8.15	10.74	47.77	114.70	20.07	C0180-035-0440-S	0.366	9.31	7.03	31.28	95.55	16.72
C0180-035-0500-M	0.180	4.57	0.035	0.89	0.500	12.70	0.391	9.93	0.356	9.04	10.74	47.77	98.70	17.27	C0180-035-0500-S	0.414	10.53	7.03	31.28	82.22	14.39
C0180-035-0560-M	0.180	4.57	0.035	0.89	0.560	14.22	0.436	11.07	0.391	9.93	10.74	47.77	86.60	15.16	C0180-035-0560-S	0.463	11.75	7.03	31.28	72.14	12.62

Part Numbers with an "*" are squared and not ground. **Part Numbers in bold** represent the newly expanded Associated Spring RAYMOND compression spring offering.

MUSIC WIRE

Catalog #	Outside Diameter (OD)		Wire Diameter (d)		Free Length (L) Approx		Load Length (L_1)		Solid Height (Sh) Approx		Load (P) at L_1		Spring Rate (R)	
	in	mm	in	mm	in	mm	in	mm	in	mm	lb	N	lb/in	N/mm
C0180-035-0620-M	0.180	4.57	0.035	0.89	0.620	15.75	0.481	12.22	0.426	10.82	10.74	47.77	77.20	13.51
C0180-035-0690-M	0.180	4.57	0.035	0.89	0.690	17.53	0.533	13.54	0.467	11.86	10.74	47.77	68.50	11.99
C0180-035-0750-M	0.180	4.57	0.035	0.89	0.750	19.05	0.578	14.68	0.502	12.75	10.74	47.77	62.40	10.92
C0180-035-0810-M	0.180	4.57	0.035	0.89	0.810	20.57	0.623	15.82	0.537	13.64	10.74	47.77	57.40	10.05
C0180-035-0880-M	0.180	4.57	0.035	0.89	0.880	22.35	0.675	17.15	0.578	14.68	10.74	47.77	52.40	9.17
C0180-035-0940-M	0.180	4.57	0.035	0.89	0.940	23.88	0.720	18.29	0.613	15.57	10.74	47.77	48.80	8.54
C0180-035-1000-M	0.180	4.57	0.035	0.89	1.000	25.40	0.765	19.43	0.648	16.46	10.74	47.77	45.70	8.00
C0180-035-1120-M	0.180	4.57	0.035	0.89	1.120	28.45	0.854	21.69	0.718	18.24	10.74	47.77	40.40	7.07
C0180-035-1250-M	0.180	4.57	0.035	0.89	1.250	31.75	0.951	24.16	0.793	20.14	10.74	47.77	36.00	6.30
C0180-035-1500-M	0.180	4.57	0.035	0.89	1.500	38.10	1.138	28.91	0.939	23.85	10.74	47.77	29.70	5.20
C0180-035-1750-M	0.180	4.57	0.035	0.89	1.750	44.45	1.325	33.66	1.085	27.56	10.74	47.77	25.30	4.43
C0180-035-2000-M	0.180	4.57	0.035	0.89	2.000	50.80	1.512	38.40	1.231	31.27	10.74	47.77	22.00	3.85
D11400*	0.182	4.63	0.025	0.63	0.264	6.70	0.169	4.30	0.161	4.10	3.86	17.16	40.91	7.16
D11410*	0.182	4.63	0.025	0.63	0.378	9.60	0.228	5.80	0.211	5.36	3.86	17.16	26.00	4.55
D11420*	0.182	4.63	0.025	0.63	0.551	14.00	0.323	8.20	0.285	7.25	3.86	17.16	16.80	2.94
D11430*	0.182	4.63	0.025	0.63	0.787	20.00	0.445	11.30	0.385	9.77	3.86	17.16	11.43	2.00
D11440*	0.182	4.63	0.025	0.63	1.142	29.00	0.638	16.20	0.533	13.55	3.86	17.16	7.71	1.35
C0188-010-0250-M*	**0.188**	**4.78**	**0.010**	**0.25**	**0.250**	**6.35**	**0.081**	**2.07**	**0.043**	**1.08**	**0.32**	**1.40**	**1.87**	**0.33**
C0188-010-0313-M*	**0.188**	**4.78**	**0.010**	**0.25**	**0.313**	**7.95**	**0.096**	**2.43**	**0.047**	**1.20**	**0.32**	**1.40**	**1.45**	**0.25**
C0188-010-0375-M*	**0.188**	**4.78**	**0.010**	**0.25**	**0.375**	**9.53**	**0.110**	**2.80**	**0.052**	**1.31**	**0.32**	**1.40**	**1.19**	**0.21**
C0188-010-0438-M*	**0.188**	**4.78**	**0.010**	**0.25**	**0.438**	**11.13**	**0.124**	**3.16**	**0.056**	**1.43**	**0.32**	**1.40**	**1.01**	**0.18**
C0188-010-0500-M*	**0.188**	**4.78**	**0.010**	**0.25**	**0.500**	**12.70**	**0.139**	**3.53**	**0.061**	**1.54**	**0.32**	**1.40**	**0.88**	**0.15**
C0188-010-0563-M*	**0.188**	**4.78**	**0.010**	**0.25**	**0.563**	**14.30**	**0.153**	**3.90**	**0.065**	**1.66**	**0.32**	**1.40**	**0.77**	**0.13**
C0188-010-0625-M*	**0.188**	**4.78**	**0.010**	**0.25**	**0.625**	**15.88**	**0.167**	**4.25**	**0.070**	**1.78**	**0.32**	**1.40**	**0.69**	**0.12**
C0188-010-0750-M*	**0.188**	**4.78**	**0.010**	**0.25**	**0.750**	**19.05**	**0.196**	**4.98**	**0.078**	**1.99**	**0.32**	**1.40**	**0.57**	**0.10**
C0188-010-0875-M*	**0.188**	**4.78**	**0.010**	**0.25**	**0.875**	**22.23**	**0.225**	**5.72**	**0.087**	**2.20**	**0.32**	**1.40**	**0.49**	**0.09**
C0188-010-1000-M*	**0.188**	**4.78**	**0.010**	**0.25**	**1.000**	**25.40**	**0.255**	**6.48**	**0.095**	**2.40**	**0.32**	**1.40**	**0.42**	**0.07**
C0188-010-1250-M*	**0.188**	**4.78**	**0.010**	**0.25**	**1.250**	**31.75**	**0.313**	**7.95**	**0.111**	**2.82**	**0.32**	**1.40**	**0.34**	**0.06**
C0188-010-1500-M*	**0.188**	**4.78**	**0.010**	**0.25**	**1.500**	**38.10**	**0.465**	**11.80**	**0.119**	**3.03**	**0.32**	**1.40**	**0.31**	**0.05**
C0188-010-1750-M*	**0.188**	**4.78**	**0.010**	**0.25**	**1.750**	**44.45**	**0.618**	**15.70**	**0.127**	**3.24**	**0.32**	**1.40**	**0.28**	**0.05**
C0188-012-0250-M*	**0.188**	**4.78**	**0.012**	**0.31**	**0.250**	**6.35**	**0.095**	**2.41**	**0.071**	**1.80**	**0.31**	**1.36**	**1.97**	**0.34**
C0188-012-0313-M*	**0.188**	**4.78**	**0.012**	**0.31**	**0.313**	**7.95**	**0.112**	**2.83**	**0.080**	**2.03**	**0.32**	**1.44**	**1.61**	**0.28**
C0188-012-0375-M*	**0.188**	**4.78**	**0.012**	**0.31**	**0.375**	**9.53**	**0.129**	**3.29**	**0.090**	**2.30**	**0.32**	**1.43**	**1.31**	**0.23**
C0188-012-0438-M*	**0.188**	**4.78**	**0.012**	**0.31**	**0.438**	**11.13**	**0.147**	**3.73**	**0.100**	**2.55**	**0.32**	**1.42**	**1.10**	**0.19**
C0188-012-0500-M*	**0.188**	**4.78**	**0.012**	**0.31**	**0.500**	**12.70**	**0.164**	**4.16**	**0.110**	**2.78**	**0.32**	**1.44**	**0.96**	**0.17**
C0188-012-0563-M*	**0.188**	**4.78**	**0.012**	**0.31**	**0.563**	**14.30**	**0.181**	**4.59**	**0.119**	**3.02**	**0.32**	**1.45**	**0.85**	**0.15**
C0188-012-0625-M*	**0.188**	**4.78**	**0.012**	**0.31**	**0.625**	**15.88**	**0.200**	**5.07**	**0.131**	**3.32**	**0.31**	**1.40**	**0.74**	**0.13**
C0188-012-0750-M*	**0.188**	**4.78**	**0.012**	**0.31**	**0.750**	**19.05**	**0.233**	**5.92**	**0.149**	**3.78**	**0.32**	**1.43**	**0.62**	**0.11**
C0188-012-0875-M*	**0.188**	**4.78**	**0.012**	**0.31**	**0.875**	**22.23**	**0.267**	**6.78**	**0.168**	**4.26**	**0.32**	**1.43**	**0.53**	**0.09**
C0188-012-1000-M*	**0.188**	**4.78**	**0.012**	**0.31**	**1.000**	**25.40**	**0.302**	**7.67**	**0.188**	**4.76**	**0.32**	**1.43**	**0.46**	**0.08**
C0188-012-1250-M*	**0.188**	**4.78**	**0.012**	**0.31**	**1.250**	**31.75**	**0.369**	**9.37**	**0.224**	**5.69**	**0.33**	**1.45**	**0.37**	**0.06**
C0188-012-1375-M*	**0.188**	**4.78**	**0.012**	**0.31**	**1.375**	**34.93**	**0.406**	**10.31**	**0.247**	**6.26**	**0.32**	**1.42**	**0.33**	**0.06**
C0188-012-1500-M*	**0.188**	**4.78**	**0.012**	**0.31**	**1.500**	**38.10**	**0.441**	**11.21**	**0.267**	**6.79**	**0.32**	**1.41**	**0.30**	**0.05**
C0188-012-1750-M*	**0.188**	**4.78**	**0.012**	**0.31**	**1.750**	**44.45**	**0.508**	**12.89**	**0.303**	**7.69**	**0.32**	**1.44**	**0.26**	**0.05**
C0188-013-0250-M*	**0.188**	**4.78**	**0.013**	**0.33**	**0.250**	**6.35**	**0.113**	**2.88**	**0.059**	**1.49**	**0.67**	**2.96**	**4.87**	**0.85**
C0188-013-0313-M*	**0.188**	**4.78**	**0.013**	**0.33**	**0.313**	**7.95**	**0.135**	**3.44**	**0.066**	**1.67**	**0.67**	**2.96**	**3.75**	**0.66**
C0188-013-0375-M*	**0.188**	**4.78**	**0.013**	**0.33**	**0.375**	**9.53**	**0.157**	**4.00**	**0.073**	**1.85**	**0.67**	**2.96**	**3.06**	**0.54**
C0188-013-0438-M*	**0.188**	**4.78**	**0.013**	**0.33**	**0.438**	**11.13**	**0.180**	**4.57**	**0.080**	**2.03**	**0.67**	**2.96**	**2.58**	**0.45**
C0188-013-0500-M*	**0.188**	**4.78**	**0.013**	**0.33**	**0.500**	**12.70**	**0.201**	**5.11**	**0.087**	**2.21**	**0.67**	**2.96**	**2.23**	**0.39**
C0188-013-0563-M*	**0.188**	**4.78**	**0.013**	**0.33**	**0.563**	**14.30**	**0.223**	**5.67**	**0.094**	**2.39**	**0.67**	**2.96**	**1.96**	**0.34**
C0188-013-0625-M*	**0.188**	**4.78**	**0.013**	**0.33**	**0.625**	**15.88**	**0.244**	**6.21**	**0.101**	**2.56**	**0.67**	**2.96**	**1.75**	**0.31**
C0188-013-0750-M*	**0.188**	**4.78**	**0.013**	**0.33**	**0.750**	**19.05**	**0.291**	**7.38**	**0.113**	**2.87**	**0.67**	**2.96**	**1.45**	**0.25**
C0188-013-0875-M*	**0.188**	**4.78**	**0.013**	**0.33**	**0.875**	**22.23**	**0.333**	**8.47**	**0.126**	**3.20**	**0.67**	**2.96**	**1.23**	**0.22**
C0188-013-1000-M*	**0.188**	**4.78**	**0.013**	**0.33**	**1.000**	**25.40**	**0.377**	**9.59**	**0.139**	**3.52**	**0.67**	**2.96**	**1.07**	**0.19**
C0188-013-1250-M*	**0.188**	**4.78**	**0.013**	**0.33**	**1.250**	**31.75**	**0.466**	**11.84**	**0.164**	**4.16**	**0.67**	**2.96**	**0.85**	**0.15**
C0188-013-1375-M*	**0.188**	**4.78**	**0.013**	**0.33**	**1.375**	**34.93**	**0.510**	**12.95**	**0.177**	**4.49**	**0.67**	**2.96**	**0.77**	**0.13**
C0188-013-1750-M*	**0.188**	**4.78**	**0.013**	**0.33**	**1.750**	**44.45**	**0.560**	**14.23**	**0.228**	**5.78**	**0.67**	**2.96**	**0.56**	**0.10**
C0188-014-0250-M*	**0.188**	**4.78**	**0.014**	**0.36**	**0.250**	**6.35**	**0.109**	**2.76**	**0.088**	**2.23**	**0.48**	**2.14**	**3.40**	**0.60**
C0188-014-0313-M*	**0.188**	**4.78**	**0.014**	**0.36**	**0.313**	**7.95**	**0.130**	**3.29**	**0.102**	**2.60**	**0.49**	**2.16**	**2.65**	**0.46**
C0188-014-0375-M*	**0.188**	**4.78**	**0.014**	**0.36**	**0.375**	**9.53**	**0.149**	**3.80**	**0.115**	**2.92**	**0.49**	**2.18**	**2.17**	**0.38**
C0188-014-0438-M*	**0.188**	**4.78**	**0.014**	**0.36**	**0.438**	**11.13**	**0.169**	**4.30**	**0.128**	**3.25**	**0.49**	**2.20**	**1.84**	**0.32**
C0188-014-0500-M*	**0.188**	**4.78**	**0.014**	**0.36**	**0.500**	**12.70**	**0.189**	**4.79**	**0.140**	**3.57**	**0.50**	**2.22**	**1.60**	**0.28**
C0188-014-0560-M*	**0.188**	**4.78**	**0.014**	**0.36**	**0.560**	**14.22**	**0.208**	**5.29**	**0.153**	**3.90**	**0.50**	**2.21**	**1.41**	**0.25**
C0188-014-0625-M*	**0.188**	**4.78**	**0.014**	**0.36**	**0.625**	**15.88**	**0.228**	**5.80**	**0.166**	**4.23**	**0.50**	**2.22**	**1.26**	**0.22**

STAINLESS STEEL

Catalog #	Load Length (L_1)		Load (P) at L_1		Spring Rate (R)	
	in	mm	lb	N	lb/in	N/mm
C0180-035-0620-S	0.511	12.97	7.03	31.28	64.31	11.25
C0180-035-0690-S	0.567	14.40	7.03	31.28	57.06	9.99
C0180-035-0750-S	0.615	15.61	7.03	31.28	51.98	9.10
C0180-035-0810-S	0.663	16.84	7.03	31.28	47.81	8.37
C0180-035-0880-S	0.719	18.26	7.03	31.28	43.65	7.64
C0180-035-0940-S	0.767	19.48	7.03	31.28	40.65	7.11
C0180-035-1000-S	0.815	20.71	7.03	31.28	38.07	6.66
C0180-035-1120-S	0.911	23.14	7.03	31.28	33.65	5.89
C0180-035-1250-S	1.016	25.79	7.03	31.28	29.99	5.25
C0180-035-1500-S	1.216	30.88	7.03	31.28	24.74	4.33
C0180-035-1750-S	1.416	35.97	7.03	31.28	21.08	3.69
C0180-035-2000-S	1.616	41.05	7.03	31.28	18.33	3.21
D21400*	0.169	4.30	3.21	14.29	34.06	5.96
D21410*	0.228	5.80	3.21	14.29	21.66	3.79
D21420*	0.323	8.20	3.21	14.29	14.00	2.45
D21430*	0.445	11.30	3.21	14.29	9.54	1.67
D21440*	0.638	16.20	3.21	14.29	6.40	1.12
C0188-010-0250-S*	**0.104**	**2.65**	**0.23**	**1.01**	**1.56**	**0.27**
C0188-010-0313-S*	**0.125**	**3.18**	**0.23**	**1.01**	**1.21**	**0.21**
C0188-010-0375-S*	**0.146**	**3.72**	**0.23**	**1.01**	**0.99**	**0.17**
C0188-010-0438-S*	**0.167**	**4.25**	**0.23**	**1.01**	**0.84**	**0.15**
C0188-010-0500-S*	**0.188**	**4.78**	**0.23**	**1.01**	**0.73**	**0.13**
C0188-010-0563-S*	**0.209**	**5.32**	**0.23**	**1.01**	**0.64**	**0.11**
C0188-010-0625-S*	**0.230**	**5.84**	**0.23**	**1.01**	**0.58**	**0.10**
C0188-010-0750-S*	**0.272**	**6.90**	**0.23**	**1.01**	**0.48**	**0.08**
C0188-010-0875-S*	**0.314**	**7.97**	**0.23**	**1.01**	**0.41**	**0.07**
C0188-010-1000-S*	**0.357**	**9.07**	**0.23**	**1.01**	**0.35**	**0.06**
C0188-010-1250-S*	**0.441**	**11.20**	**0.23**	**1.01**	**0.28**	**0.05**
C0188-010-1500-S*	**0.606**	**15.39**	**0.23**	**1.01**	**0.25**	**0.04**
C0188-010-1750-S*	**0.773**	**19.63**	**0.23**	**1.01**	**0.23**	**0.04**
C0188-012-0250-S*	**0.095**	**2.41**	**0.25**	**1.13**	**1.64**	**0.29**
C0188-012-0313-S*	**0.112**	**2.83**	**0.27**	**1.20**	**1.34**	**0.23**
C0188-012-0375-S*	**0.129**	**3.29**	**0.27**	**1.19**	**1.09**	**0.19**
C0188-012-0438-S*	**0.147**	**3.73**	**0.27**	**1.19**	**0.92**	**0.16**
C0188-012-0500-S*	**0.164**	**4.16**	**0.27**	**1.20**	**0.80**	**0.14**
C0188-012-0563-S*	**0.181**	**4.59**	**0.27**	**1.20**	**0.71**	**0.12**
C0188-012-0625-S*	**0.200**	**5.07**	**0.26**	**1.17**	**0.62**	**0.11**
C0188-012-0750-S*	**0.233**	**5.92**	**0.27**	**1.19**	**0.52**	**0.09**
C0188-012-0875-S*	**0.267**	**6.78**	**0.27**	**1.19**	**0.44**	**0.08**
C0188-012-1000-S*	**0.302**	**7.67**	**0.27**	**1.19**	**0.38**	**0.07**
C0188-012-1250-S*	**0.369**	**9.37**	**0.27**	**1.21**	**0.31**	**0.05**
C0188-012-1375-S*	**0.406**	**10.31**	**0.27**	**1.19**	**0.28**	**0.05**
C0188-012-1500-S*	**0.441**	**11.21**	**0.26**	**1.18**	**0.25**	**0.04**
C0188-012-1750-S*	**0.508**	**12.89**	**0.27**	**1.20**	**0.22**	**0.04**
C0188-013-0250-S*	**0.130**	**3.31**	**0.49**	**2.16**	**4.06**	**0.71**
C0188-013-0313-S*	**0.157**	**4.00**	**0.49**	**2.16**	**3.12**	**0.55**
C0188-013-0375-S*	**0.184**	**4.68**	**0.49**	**2.16**	**2.55**	**0.45**
C0188-013-0438-S*	**0.212**	**5.38**	**0.49**	**2.16**	**2.15**	**0.38**
C0188-013-0500-S*	**0.238**	**6.05**	**0.49**	**2.16**	**1.86**	**0.33**
C0188-013-0563-S*	**0.265**	**6.74**	**0.49**	**2.16**	**1.63**	**0.29**
C0188-013-0625-S*	**0.292**	**7.41**	**0.49**	**2.16**	**1.46**	**0.26**
C0188-013-0750-S*	**0.348**	**8.83**	**0.49**	**2.16**	**1.21**	**0.21**
C0188-013-0875-S*	**0.401**	**10.17**	**0.49**	**2.16**	**1.03**	**0.18**
C0188-013-1000-S*	**0.455**	**11.55**	**0.49**	**2.16**	**0.89**	**0.16**
C0188-013-1250-S*	**0.563**	**14.31**	**0.49**	**2.16**	**0.71**	**0.12**
C0188-013-1375-S*	**0.617**	**15.68**	**0.49**	**2.16**	**0.64**	**0.11**
C0188-013-1750-S*	**0.708**	**17.98**	**0.49**	**2.16**	**0.47**	**0.08**
C0188-014-0250-S*	**0.109**	**2.76**	**0.40**	**1.78**	**2.83**	**0.50**
C0188-014-0313-S*	**0.130**	**3.29**	**0.40**	**1.80**	**2.21**	**0.39**
C0188-014-0375-S*	**0.149**	**3.80**	**0.41**	**1.81**	**1.81**	**0.32**
C0188-014-0438-S*	**0.169**	**4.30**	**0.41**	**1.83**	**1.53**	**0.27**
C0188-014-0500-S*	**0.189**	**4.79**	**0.41**	**1.85**	**1.33**	**0.23**
C0188-014-0560-S*	**0.208**	**5.29**	**0.41**	**1.84**	**1.18**	**0.21**
C0188-014-0625-S*	**0.228**	**5.80**	**0.42**	**1.85**	**1.05**	**0.18**

FOR INFORMATION ON ALTERNATIVE FINISHES, SEE PAGE 311

Part Numbers with an "*" are squared and not ground. **Part Numbers in bold** represent the newly expanded Associated Spring RAYMOND compression spring offering.

(OD) 0.188 - 0.188

MUSIC WIRE															STAINLESS STEEL						
Catalog #	Outside Diameter (OD)		Wire Diameter (d)		Free Length (L) Approx		Load Length (L_1)		Solid Height (Sh) Approx		Load (P) at L_1		Spring Rate (R)		Catalog #	Load Length (L_1)		Load (P) at L_1		Spring Rate (R)	
	in	mm	in	mm	in	mm	in	mm	in	mm	lb	N	lb/in	N/mm		in	mm	lb	N	lb/in	N/mm
C0188-014-0750-M*	0.188	4.78	0.014	0.36	0.750	19.05	0.268	6.81	0.192	4.88	0.50	2.23	1.04	0.18	C0188-014-0750-S*	0.268	6.81	0.42	1.86	0.87	0.15
C0188-014-0880-M*	0.188	4.78	0.014	0.36	0.880	22.35	0.308	7.82	0.217	5.52	0.51	2.27	0.89	0.16	C0188-014-0880-S*	0.308	7.82	0.42	1.89	0.74	0.13
C0188-014-1000-M*	0.188	4.78	0.014	0.36	1.000	25.40	0.346	8.78	0.242	6.14	0.51	2.27	0.78	0.14	C0188-014-1000-S*	0.346	8.78	0.43	1.89	0.65	0.11
C0188-014-1250-M*	0.188	4.78	0.014	0.36	1.250	31.75	0.424	10.78	0.293	7.43	0.51	2.28	0.62	0.11	C0188-014-1250-S*	0.424	10.78	0.43	1.90	0.52	0.09
C0188-014-1375-M*	0.188	4.78	0.014	0.36	1.375	34.93	0.465	11.80	0.319	8.11	0.51	2.27	0.56	0.10	C0188-014-1375-S*	0.465	11.80	0.42	1.89	0.47	0.08
C0188-014-1500-M*	0.188	4.78	0.014	0.36	1.500	38.10	0.505	12.83	0.346	8.79	0.51	2.26	0.51	0.09	C0188-014-1500-S*	0.505	12.83	0.42	1.88	0.43	0.07
C0188-014-1750-M*	0.188	4.78	0.014	0.36	1.750	44.45	0.582	14.78	0.394	10.02	0.51	2.29	0.44	0.08	C0188-014-1750-S*	0.582	14.78	0.43	1.90	0.37	0.06
C0188-015-0250-M*	0.188	4.78	0.015	0.38	0.250	6.35	0.111	2.83	0.074	1.89	1.00	4.44	7.20	1.26	C0188-015-0250-S*	0.128	3.24	0.73	3.27	6.00	1.05
C0188-015-0310-M*	0.188	4.78	0.015	0.38	0.310	7.87	0.119	3.02	0.089	2.27	0.96	4.25	5.00	0.88	C0188-015-0310-S*	0.134	3.40	0.73	3.27	4.17	0.73
C0188-015-0500-M*	0.188	4.78	0.015	0.38	0.500	12.70	0.177	4.50	0.126	3.21	0.90	4.02	2.80	0.49	C0188-015-0500-S*	0.185	4.70	0.73	3.27	2.33	0.41
C0188-015-0560-M*	0.188	4.78	0.015	0.38	0.560	14.22	0.197	5.00	0.139	3.54	0.87	3.88	2.40	0.42	C0188-015-0560-S*	0.197	5.00	0.73	3.23	2.00	0.35
C0188-015-0720-M*	0.188	4.78	0.015	0.38	0.720	18.29	0.246	6.24	0.170	4.32	0.85	3.80	1.80	0.32	C0188-015-0720-S*	0.246	6.24	0.71	3.16	1.50	0.26
C0188-015-1380-M*	0.188	4.78	0.015	0.38	1.380	35.05	0.612	15.54	0.218	5.53	1.00	4.44	1.30	0.23	C0188-015-1380-S*	0.702	17.83	0.73	3.27	1.08	0.19
C0188-016-1750-M*	0.188	4.78	0.016	0.41	1.750	44.45	0.661	16.78	0.333	8.46	1.20	5.33	1.10	0.19	C0188-016-1750-S*	0.786	19.95	0.88	3.93	0.92	0.16
C0188-018-0380-M*	0.188	4.78	0.018	0.46	0.380	9.65	0.176	4.48	0.127	3.22	1.67	7.42	8.20	1.44	C0188-018-0380-S*	0.199	5.05	1.24	5.51	6.83	1.20
C0188-018-0440-M*	0.188	4.78	0.018	0.46	0.440	11.18	0.189	4.80	0.152	3.86	1.53	6.81	6.10	1.07	C0188-018-0440-S*	0.196	4.99	1.24	5.51	5.08	0.89
C0188-018-0560-M*	0.188	4.78	0.018	0.46	0.560	14.22	0.286	7.27	0.152	3.86	1.67	7.42	6.10	1.07	C0188-018-0560-S*	0.316	8.04	1.24	5.51	5.08	0.89
C0188-018-0750-M*	0.188	4.78	0.018	0.46	0.750	19.05	0.289	7.34	0.218	5.54	1.66	7.38	3.60	0.63	C0188-018-0750-S*	0.337	8.57	1.24	5.51	3.00	0.52
C0188-018-0880-M*	0.188	4.78	0.018	0.46	0.880	22.35	0.342	8.68	0.244	6.20	1.67	7.42	3.10	0.54	C0188-018-0880-S*	0.401	10.18	1.24	5.51	2.58	0.45
C0188-018-1000-M*	0.188	4.78	0.018	0.46	1.000	25.40	0.444	11.27	0.250	6.36	1.67	7.42	3.00	0.53	C0188-018-1000-S*	0.505	12.82	1.24	5.51	2.50	0.44
C0188-018-1380-M*	0.188	4.78	0.018	0.46	1.380	35.05	0.585	14.86	0.333	8.46	1.67	7.42	2.10	0.37	C0188-018-1380-S*	0.672	17.08	1.24	5.51	1.75	0.31
C0188-018-1750-M*	0.188	4.78	0.018	0.46	1.750	44.45	0.768	19.51	0.398	10.11	1.67	7.42	1.70	0.30	C0188-018-1750-S*	0.876	22.25	1.24	5.51	1.42	0.25
C0188-020-0250-M*	0.188	4.78	0.020	0.51	0.250	6.35	0.140	3.56	0.109	2.77	2.24	9.97	20.42	3.57	C0188-020-0250-S*	0.152	3.86	1.67	7.43	17.01	2.98
C0188-020-0375-M*	0.188	4.78	0.020	0.51	0.375	9.53	0.200	5.08	0.142	3.61	2.24	9.97	12.80	2.24	C0188-020-0375-S*	0.218	5.55	1.67	7.43	10.66	1.87
C0188-020-0438-M*	0.188	4.78	0.020	0.51	0.438	11.13	0.230	5.84	0.158	4.00	2.24	9.97	10.77	1.88	C0188-020-0438-S*	0.252	6.40	1.67	7.43	8.97	1.57
C0188-020-0500-M*	0.188	4.78	0.020	0.51	0.500	12.70	0.227	5.76	0.187	4.76	2.24	9.97	8.20	1.44	C0188-020-0500-S*	0.255	6.49	1.67	7.43	6.83	1.20
C0188-020-0560-M*	0.188	4.78	0.020	0.51	0.560	14.22	0.287	7.28	0.187	4.76	2.24	9.97	8.20	1.44	C0188-020-0560-S*	0.315	8.01	1.67	7.43	6.83	1.20
C0188-020-0625-M*	0.188	4.78	0.020	0.51	0.625	15.88	0.319	8.11	0.202	5.13	2.24	9.97	7.33	1.28	C0188-020-0625-S*	0.351	8.92	1.67	7.43	6.11	1.07
C0188-020-0690-M*	0.188	4.78	0.020	0.51	0.690	17.53	0.323	8.20	0.271	6.88	1.80	8.00	4.90	0.86	C0188-020-0690-S*	0.323	8.20	1.50	6.67	4.08	0.71
C0188-020-0750-M*	0.188	4.78	0.020	0.51	0.750	19.05	0.379	9.62	0.232	5.88	2.24	9.97	6.04	1.06	C0188-020-0750-S*	0.418	10.62	1.67	7.43	5.03	0.88
C0188-020-0875-M*	0.188	4.78	0.020	0.51	0.875	22.23	0.439	11.15	0.261	6.63	2.24	9.97	5.14	0.90	C0188-020-0875-S*	0.485	12.31	1.67	7.43	4.28	0.75
C0188-020-0938-M*	0.188	4.78	0.020	0.51	0.938	23.83	0.469	11.91	0.276	7.01	2.24	9.97	4.78	0.84	C0188-020-0938-S*	0.518	13.17	1.67	7.43	3.98	0.70
C0188-020-1000-M*	0.188	4.78	0.020	0.51	1.000	25.40	0.466	11.84	0.306	7.76	2.24	9.97	4.20	0.74	C0188-020-1000-S*	0.522	13.27	1.67	7.43	3.50	0.61
C0188-020-1125-M*	0.188	4.78	0.020	0.51	1.125	28.58	0.557	14.16	0.321	8.15	2.24	9.97	3.95	0.69	C0188-020-1125-S*	0.617	15.68	1.67	7.43	3.29	0.58
C0188-020-1250-M*	0.188	4.78	0.020	0.51	1.250	31.75	0.617	15.66	0.351	8.91	2.24	9.97	3.54	0.62	C0188-020-1250-S*	0.683	17.36	1.67	7.43	2.95	0.52
C0188-020-1380-M*	0.188	4.78	0.020	0.51	1.380	35.05	0.633	16.07	0.403	10.22	2.24	9.97	3.00	0.53	C0188-020-1380-S*	0.711	18.07	1.67	7.43	2.50	0.44
C0188-020-1500-M*	0.188	4.78	0.020	0.51	1.500	38.10	0.669	16.98	0.548	13.92	1.75	7.77	2.10	0.37	C0188-020-1500-S*	0.669	16.98	1.45	6.47	1.75	0.31
C0188-020-1690-M*	0.188	4.78	0.020	0.51	1.690	42.93	0.793	20.15	0.470	11.95	2.24	9.97	2.50	0.44	C0188-020-1690-S*	0.888	22.55	1.67	7.43	2.08	0.36
C0188-020-1750-M*	0.188	4.78	0.020	0.51	1.750	44.45	0.706	17.94	0.548	13.92	2.19	9.75	2.10	0.37	C0188-020-1750-S*	0.795	20.19	1.67	7.43	1.75	0.31
C0188-022-0410-M	0.188	4.78	0.022	0.56	0.410	10.41	0.224	5.69	0.201	5.10	2.05	9.10	11.00	1.93	C0188-022-0410-S	0.224	5.69	1.70	7.58	9.16	1.60
C0188-022-0500-M	0.188	4.78	0.022	0.56	0.500	12.70	0.278	7.07	0.251	6.38	1.84	8.19	8.30	1.45	C0188-022-0500-S	0.278	7.07	1.53	6.82	6.91	1.21
C0188-022-0630-M	0.188	4.78	0.022	0.56	0.630	16.00	0.354	8.99	0.320	8.14	1.71	7.61	6.20	1.09	C0188-022-0630-S	0.354	8.99	1.43	6.34	5.17	0.90
C0188-022-0750-M	0.188	4.78	0.022	0.56	0.750	19.05	0.360	9.14	0.273	6.93	2.92	13.01	7.50	1.31	C0188-022-0750-S	0.400	10.15	2.19	9.73	6.25	1.09
C0188-022-1030-M	0.188	4.78	0.022	0.56	1.030	26.16	0.491	12.48	0.416	10.56	2.48	11.03	4.60	0.81	C0188-022-1030-S	0.491	12.48	2.06	9.18	3.83	0.67
C0188-022-1380-M	0.188	4.78	0.022	0.56	1.380	35.05	0.667	16.93	0.461	11.71	2.92	13.01	4.10	0.72	C0188-022-1380-S	0.739	18.78	2.19	9.73	3.42	0.60
C0188-023-0250-M	0.188	4.78	0.023	0.58	0.250	6.35	0.140	3.55	0.118	2.99	3.31	14.72	30.00	5.25	C0188-023-0250-S	0.151	3.83	2.48	11.03	24.99	4.37
C0188-023-0313-M	0.188	4.78	0.023	0.58	0.313	7.95	0.172	4.37	0.140	3.55	3.31	14.72	23.51	4.11	C0188-023-0313-S	0.186	4.73	2.48	11.03	19.58	3.43
C0188-023-0380-M	0.188	4.78	0.023	0.58	0.380	9.65	0.206	5.23	0.162	4.12	3.31	14.72	19.00	3.33	C0188-023-0380-S	0.223	5.67	2.48	11.03	15.83	2.77
C0188-023-0438-M	0.188	4.78	0.023	0.58	0.438	11.13	0.231	5.87	0.183	4.66	3.31	14.72	16.01	2.80	C0188-023-0438-S	0.252	6.40	2.48	11.03	13.34	2.33
C0188-023-0500-M	0.188	4.78	0.023	0.58	0.500	12.70	0.273	6.94	0.245	6.22	2.49	11.09	11.00	1.93	C0188-023-0500-S	0.273	6.94	2.08	9.24	9.16	1.60
C0188-023-0560-M	0.188	4.78	0.023	0.58	0.560	14.22	0.282	7.17	0.245	6.22	3.06	13.59	11.00	1.93	C0188-023-0560-S	0.289	7.35	2.48	11.03	9.16	1.60
C0188-023-0690-M	0.188	4.78	0.023	0.58	0.690	17.53	0.359	9.12	0.265	6.72	3.31	14.72	10.00	1.75	C0188-023-0690-S	0.392	9.96	2.48	11.03	8.33	1.46
C0188-023-0750-M	0.188	4.78	0.023	0.58	0.750	19.05	0.379	9.63	0.291	7.39	3.31	14.72	8.92	1.56	C0188-023-0750-S	0.416	10.57	2.48	11.03	7.43	1.30
C0188-023-0810-M	0.188	4.78	0.023	0.58	0.810	20.57	0.421	10.68	0.303	7.69	3.31	14.72	8.50	1.49	C0188-023-0810-S	0.460	11.68	2.48	11.03	7.08	1.24
C0188-023-0875-M	0.188	4.78	0.023	0.58	0.875	22.23	0.438	11.12	0.334	8.48	3.31	14.72	7.57	1.32	C0188-023-0875-S	0.482	12.23	2.48	11.03	6.31	1.10
C0188-023-0940-M	0.188	4.78	0.023	0.58	0.940	23.88	0.467	11.86	0.403	10.23	2.88	12.83	6.10	1.07	C0188-023-0940-S	0.467	11.86	2.40	10.69	5.08	0.89
C0188-023-1000-M	0.188	4.78	0.023	0.58	1.000	25.40	0.527	13.39	0.357	9.07	3.31	14.72	7.00	1.23	C0188-023-1000-S	0.575	14.60	2.48	11.03	5.83	1.02
C0188-023-1220-M	0.188	4.78	0.023	0.58	1.220	30.99	0.571	14.51	0.472	12.00	3.31	14.72	5.10	0.89	C0188-023-1220-S	0.636	16.16	2.48	11.03	4.25	0.74
C0188-023-1380-M	0.188	4.78	0.023	0.58	1.380	35.05	0.718	18.24	0.481	12.21	3.31	14.72	5.00	0.88	C0188-023-1380-S	0.784	19.93	2.48	11.03	4.17	0.73
C0188-023-1750-M	0.188	4.78	0.023	0.58	1.750	44.45	0.901	22.90	0.603	15.31	3.31	14.72	3.90	0.68	C0188-023-1750-S	0.987	25.06	2.48	11.03	3.25	0.57
C0188-023-2000-M	0.188	4.78	0.023	0.58	2.000	50.80	0.959	24.37	0.728	18.50	3.31	14.72	3.18	0.56	C0188-023-2000-S	1.064	27.02	2.48	11.03	2.65	0.46
C0188-025-0280-M	0.188	4.78	0.025	0.64	0.280	7.11	0.170	4.32	0.140	3.56	4.17	18.55	38.00	6.65	C0188-025-0280-S	0.181	4.60	3.13	13.94	31.65	5.54
C0188-025-0440-M	0.188	4.78	0.025	0.64	0.440	11.18	0.250	6.36	0.207	5.26	4.17	18.55	22.00	3.85	C0188-025-0440-S	0.269	6.83	3.13	13.94	18.33	3.21
C0188-025-0500-M	0.188	4.78	0.025	0.64	0.500	12.70	0.292	7.40	0.223	5.66	4.17	18.55	20.00	3.50	C0188-025-0500-S	0.312	7.92	3.13	13.94	16.66	2.92

Part Numbers with an "*" are squared and not ground. **Part Numbers in bold** represent the newly expanded Associated Spring RAYMOND compression spring offering.

MUSIC WIRE															STAINLESS STEEL					
Catalog #	Outside Diameter (OD)		Wire Diameter (d)		Free Length (L) Approx		Load Length (L_1)		Solid Height (Sh) Approx		Load (P) at L_1		Spring Rate (R)		Catalog #	Load Length (L_1)		Load (P) at L_1		Spring Rate (R)	
	in	mm	in	mm	in	mm	in	mm	in	mm	lb	N	lb/in	N/mm		in	mm	lb	N	lb/in	N/mm
C0188-025-0590-M	**0.188**	**4.78**	**0.025**	**0.64**	**0.590**	**14.99**	**0.329**	**8.37**	**0.265**	**6.74**	**4.17**	**18.55**	**16.00**	**2.80**	**C0188-025-0590-S**	**0.355**	**9.01**	**3.13**	**13.94**	**13.33**	**2.33**
C0188-025-0630-M	**0.188**	**4.78**	**0.025**	**0.64**	**0.630**	**16.00**	**0.367**	**9.31**	**0.336**	**8.54**	**3.16**	**14.06**	**12.00**	**2.10**	**C0188-025-0630-S**	**0.367**	**9.31**	**2.63**	**11.71**	**10.00**	**1.75**
C0188-025-0750-M	**0.188**	**4.78**	**0.025**	**0.64**	**0.750**	**19.05**	**0.403**	**10.22**	**0.336**	**8.54**	**4.17**	**18.55**	**12.00**	**2.10**	**C0188-025-0750-S**	**0.436**	**11.09**	**3.13**	**13.94**	**10.00**	**1.75**
C0188-025-0840-M	**0.188**	**4.78**	**0.025**	**0.64**	**0.840**	**21.34**	**0.493**	**12.51**	**0.336**	**8.54**	**4.17**	**18.55**	**12.00**	**2.10**	**C0188-025-0840-S**	**0.526**	**13.37**	**3.13**	**13.94**	**10.00**	**1.75**
C0188-025-0914-M	**0.188**	**4.78**	**0.025**	**0.64**	**0.914**	**23.22**	**0.512**	**12.99**	**0.463**	**11.75**	**3.34**	**14.86**	**8.30**	**1.45**	**C0188-025-0914-S**	**0.512**	**12.99**	**2.78**	**12.38**	**6.91**	**1.21**
C0188-025-1000-M	**0.188**	**4.78**	**0.025**	**0.64**	**1.000**	**25.40**	**0.556**	**14.13**	**0.415**	**10.53**	**4.17**	**18.55**	**9.40**	**1.65**	**C0188-025-1000-S**	**0.600**	**15.23**	**3.13**	**13.94**	**7.83**	**1.37**
C0188-025-1940-M	**0.188**	**4.78**	**0.025**	**0.64**	**1.940**	**49.28**	**1.053**	**26.74**	**0.777**	**19.73**	**4.17**	**18.55**	**4.70**	**0.82**	**C0188-025-1940-S**	**1.139**	**28.94**	**3.13**	**13.94**	**3.92**	**0.69**
C0188-026-0313-M	**0.188**	**4.78**	**0.026**	**0.66**	**0.313**	**7.95**	**0.236**	**6.00**	**0.234**	**5.94**	**1.80**	**8.01**	**23.51**	**4.11**	**C0188-026-0313-S**	**0.236**	**6.00**	**1.50**	**6.67**	**19.58**	**3.43**
C0188-026-0380-M	**0.188**	**4.78**	**0.026**	**0.66**	**0.380**	**9.65**	**0.239**	**6.08**	**0.182**	**4.63**	**4.65**	**20.67**	**33.00**	**5.78**	**C0188-026-0380-S**	**0.253**	**6.42**	**3.50**	**15.56**	**27.49**	**4.81**
C0188-026-0630-M	**0.188**	**4.78**	**0.026**	**0.66**	**0.630**	**16.00**	**0.383**	**9.72**	**0.356**	**9.04**	**3.46**	**15.41**	**14.00**	**2.45**	**C0188-026-0630-S**	**0.383**	**9.72**	**2.89**	**12.83**	**11.66**	**2.04**
C0188-026-0750-M	**0.188**	**4.78**	**0.026**	**0.66**	**0.750**	**19.05**	**0.440**	**11.18**	**0.336**	**8.53**	**4.65**	**20.67**	**15.00**	**2.63**	**C0188-026-0750-S**	**0.470**	**11.94**	**3.50**	**15.56**	**12.50**	**2.19**
C0188-026-0840-M	**0.188**	**4.78**	**0.026**	**0.66**	**0.840**	**21.34**	**0.483**	**12.26**	**0.379**	**9.63**	**4.65**	**20.67**	**13.00**	**2.28**	**C0188-026-0840-S**	**0.517**	**13.13**	**3.50**	**15.56**	**10.83**	**1.90**
C0188-026-0880-M	**0.188**	**4.78**	**0.026**	**0.66**	**0.880**	**22.35**	**0.493**	**12.52**	**0.406**	**10.32**	**4.65**	**20.67**	**12.00**	**2.10**	**C0188-026-0880-S**	**0.530**	**13.46**	**3.50**	**15.56**	**10.00**	**1.75**
C0188-026-0910-M	**0.188**	**4.78**	**0.026**	**0.66**	**0.910**	**23.11**	**0.523**	**13.28**	**0.406**	**10.32**	**4.65**	**20.67**	**12.00**	**2.10**	**C0188-026-0910-S**	**0.560**	**14.23**	**3.50**	**15.56**	**10.00**	**1.75**
C0188-026-1000-M	**0.188**	**4.78**	**0.026**	**0.66**	**1.000**	**25.40**	**0.619**	**15.73**	**0.400**	**10.17**	**4.65**	**20.67**	**12.20**	**2.14**	**C0188-026-1000-S**	**0.656**	**16.66**	**3.50**	**15.56**	**10.16**	**1.78**
C0188-026-1750-M	**0.188**	**4.78**	**0.026**	**0.66**	**1.750**	**44.45**	**1.024**	**26.01**	**0.714**	**18.13**	**4.65**	**20.67**	**6.40**	**1.12**	**C0188-026-1750-S**	**1.094**	**27.79**	**3.50**	**15.56**	**5.33**	**0.93**
C0188-026-3000-M	**0.188**	**4.78**	**0.026**	**0.66**	**3.000**	**76.20**	**1.759**	**44.68**	**1.617**	**41.07**	**3.35**	**14.91**	**2.70**	**0.47**	**C0188-026-3000-S**	**1.759**	**44.68**	**2.79**	**12.42**	**2.25**	**0.39**
C0188-028-0500-M	**0.188**	**4.78**	**0.028**	**0.71**	**0.500**	**12.70**	**0.332**	**8.44**	**0.245**	**6.23**	**5.70**	**25.34**	**34.00**	**5.95**	**C0188-028-0500-S**	**0.348**	**8.85**	**4.30**	**19.12**	**28.32**	**4.96**
C0188-028-0530-M	**0.188**	**4.78**	**0.028**	**0.71**	**0.530**	**13.46**	**0.319**	**8.10**	**0.294**	**7.46**	**5.70**	**25.34**	**27.00**	**4.73**	**C0188-028-0530-S**	**0.339**	**8.61**	**4.30**	**19.12**	**22.49**	**3.94**
C0188-028-0690-M	**0.188**	**4.78**	**0.028**	**0.71**	**0.690**	**17.53**	**0.442**	**11.24**	**0.335**	**8.50**	**5.70**	**25.34**	**23.00**	**4.03**	**C0188-028-0690-S**	**0.466**	**11.83**	**4.30**	**19.12**	**19.16**	**3.35**
C0188-028-1000-M	**0.188**	**4.78**	**0.028**	**0.71**	**1.000**	**25.40**	**0.620**	**15.75**	**0.482**	**12.23**	**5.70**	**25.34**	**15.00**	**2.63**	**C0188-028-1000-S**	**0.656**	**16.66**	**4.30**	**19.12**	**12.50**	**2.19**
C0188-028-1380-M	**0.188**	**4.78**	**0.028**	**0.71**	**1.380**	**35.05**	**0.862**	**21.90**	**0.635**	**16.14**	**5.70**	**25.34**	**11.00**	**1.93**	**C0188-028-1380-S**	**0.911**	**23.14**	**4.30**	**19.12**	**9.16**	**1.60**
C0188-028-1750-M	**0.188**	**4.78**	**0.028**	**0.71**	**1.750**	**44.45**	**1.064**	**27.02**	**0.823**	**20.90**	**5.70**	**25.34**	**8.30**	**1.45**	**C0188-028-1750-S**	**1.128**	**28.66**	**4.30**	**19.12**	**6.91**	**1.21**
C0188-029-0690-M	**0.188**	**4.78**	**0.029**	**0.74**	**0.690**	**17.53**	**0.458**	**11.63**	**0.346**	**8.79**	**6.27**	**27.89**	**27.00**	**4.73**	**C0188-029-0690-S**	**0.479**	**12.18**	**4.74**	**21.07**	**22.49**	**3.94**
C0188-029-1880-M	**0.188**	**4.78**	**0.029**	**0.74**	**1.880**	**47.75**	**1.124**	**28.56**	**0.989**	**25.12**	**6.27**	**27.89**	**8.30**	**1.45**	**C0188-029-1880-S**	**1.195**	**30.35**	**4.74**	**21.07**	**6.91**	**1.21**
C0188-029-2250-M	**0.188**	**4.78**	**0.029**	**0.74**	**2.250**	**57.15**	**1.426**	**36.22**	**1.345**	**34.15**	**4.94**	**21.99**	**6.00**	**1.05**	**C0188-029-2250-S**	**1.426**	**36.22**	**4.12**	**18.32**	**5.00**	**0.87**
C0188-029-2500-M	**0.188**	**4.78**	**0.029**	**0.74**	**2.500**	**63.50**	**1.558**	**39.57**	**1.461**	**37.12**	**5.18**	**23.05**	**5.50**	**0.96**	**C0188-029-2500-S**	**1.558**	**39.57**	**4.32**	**19.20**	**4.58**	**0.80**
C0188-030-0440-M	**0.188**	**4.78**	**0.030**	**0.76**	**0.440**	**11.18**	**0.296**	**7.52**	**0.284**	**7.22**	**6.04**	**26.86**	**42.00**	**7.35**	**C0188-030-0440-S**	**0.296**	**7.52**	**5.03**	**22.37**	**34.99**	**6.12**
C0188-030-0500-M	**0.188**	**4.78**	**0.030**	**0.76**	**0.500**	**12.70**	**0.377**	**9.57**	**0.373**	**9.47**	**3.69**	**16.42**	**30.00**	**5.25**	**C0188-030-0500-S**	**0.377**	**9.57**	**3.08**	**13.68**	**24.99**	**4.37**
C0188-030-0630-M	**0.188**	**4.78**	**0.030**	**0.76**	**0.630**	**16.00**	**0.422**	**10.71**	**0.345**	**8.76**	**6.88**	**30.60**	**33.00**	**5.78**	**C0188-030-0630-S**	**0.441**	**11.20**	**5.20**	**23.14**	**27.49**	**4.81**
C0188-030-0750-M	**0.188**	**4.78**	**0.030**	**0.76**	**0.750**	**19.05**	**0.491**	**12.47**	**0.467**	**11.87**	**5.96**	**26.52**	**23.00**	**4.03**	**C0188-030-0750-S**	**0.491**	**12.47**	**4.97**	**22.09**	**19.16**	**3.35**
C0188-030-1220-M	**0.188**	**4.78**	**0.030**	**0.76**	**1.220**	**30.99**	**0.790**	**20.07**	**0.644**	**16.36**	**6.88**	**30.60**	**16.00**	**2.80**	**C0188-030-1220-S**	**0.830**	**21.08**	**5.20**	**23.14**	**13.33**	**2.33**
C0188-030-1630-M	**0.188**	**4.78**	**0.030**	**0.76**	**1.630**	**41.40**	**1.005**	**25.52**	**0.908**	**23.07**	**6.88**	**30.60**	**11.00**	**1.93**	**C0188-030-1630-S**	**1.062**	**26.98**	**5.20**	**23.14**	**9.16**	**1.60**
C0188-030-2750-M	**0.188**	**4.78**	**0.030**	**0.76**	**2.750**	**69.85**	**1.738**	**44.15**	**1.430**	**36.33**	**6.88**	**30.60**	**6.80**	**1.19**	**C0188-030-2750-S**	**1.832**	**46.53**	**5.20**	**23.14**	**5.66**	**0.99**
D11600*	0.189	4.80	0.031	0.80	0.272	6.90	0.205	5.20	0.205	5.20	7.16	31.87	105.89	18.53	D21600*	0.205	5.20	5.97	26.55	88.23	15.44
D11610*	0.189	4.80	0.031	0.80	0.382	9.70	0.276	7.00	0.268	6.80	7.16	31.87	67.83	11.87	D21610*	0.276	7.00	5.97	26.55	56.51	9.89
D11620*	0.189	4.80	0.031	0.80	0.551	14.00	0.386	9.80	0.362	9.20	7.16	31.87	43.83	7.67	D21620*	0.386	9.80	5.97	26.55	36.51	6.39
D11630*	0.189	4.80	0.031	0.80	0.768	19.50	0.531	13.50	0.488	12.40	7.16	31.87	29.83	5.22	D21630*	0.531	13.50	5.97	26.55	24.86	4.35
D11640*	0.189	4.80	0.031	0.80	1.102	28.00	0.752	19.10	0.677	17.20	7.16	31.87	20.11	3.52	D21640*	0.752	19.10	5.97	26.55	16.74	2.93
C0210-018-0250-M*	0.210	5.33	0.018	0.46	0.250	6.35	0.114	2.90	0.089	2.26	1.50	6.67	11.00	1.93	C0210-018-0250-S*	0.147	3.73	0.95	4.21	9.16	1.60
C0210-018-0310-M*	0.210	5.33	0.018	0.46	0.310	7.87	0.135	3.43	0.099	2.51	1.50	6.67	8.60	1.51	C0210-018-0310-S*	0.178	4.52	0.95	4.21	7.16	1.25
C0210-018-0380-M*	0.210	5.33	0.018	0.46	0.380	9.65	0.161	4.09	0.110	2.79	1.50	6.67	6.80	1.19	C0210-018-0380-S*	0.213	5.41	0.95	4.21	5.66	0.99
C0210-018-0440-M*	0.210	5.33	0.018	0.46	0.440	11.18	0.182	4.62	0.120	3.05	1.50	6.67	5.80	1.02	C0210-018-0440-S*	0.244	6.20	0.95	4.21	4.83	0.85
C0210-018-0500-M*	0.210	5.33	0.018	0.46	0.500	12.70	0.204	5.18	0.130	3.30	1.50	6.67	5.10	0.89	C0210-018-0500-S*	0.277	7.05	0.95	4.21	4.25	0.74
C0210-018-0560-M*	0.210	5.33	0.018	0.46	0.560	14.22	0.226	5.74	0.140	3.56	1.50	6.67	4.50	0.79	C0210-018-0560-S*	0.308	7.82	0.95	4.21	3.75	0.66
C0210-018-0620-M*	0.210	5.33	0.018	0.46	0.620	15.75	0.248	6.30	0.150	3.81	1.50	6.67	4.00	0.70	C0210-018-0620-S*	0.336	8.54	0.95	4.21	3.33	0.58
C0210-018-0690-M*	0.210	5.33	0.018	0.46	0.690	17.53	0.273	6.93	0.161	4.09	1.50	6.67	3.60	0.63	C0210-018-0690-S*	0.375	9.52	0.95	4.21	3.00	0.52
C0210-018-0750-M*	0.210	5.33	0.018	0.46	0.750	19.05	0.295	7.49	0.171	4.34	1.50	6.67	3.30	0.58	C0210-018-0750-S*	0.406	10.31	0.95	4.21	2.75	0.48
C0210-018-0810-M*	0.210	5.33	0.018	0.46	0.810	20.57	0.310	7.87	0.181	4.60	1.50	6.67	3.00	0.53	C0210-018-0810-S*	0.432	10.96	0.95	4.21	2.50	0.44
C0210-018-0880-M*	0.210	5.33	0.018	0.46	0.880	22.35	0.342	8.69	0.192	4.88	1.50	6.67	2.80	0.49	C0210-018-0880-S*	0.475	12.05	0.95	4.21	2.33	0.41
C0210-018-1000-M*	0.210	5.33	0.018	0.46	1.000	25.40	0.375	9.53	0.212	5.38	1.50	6.67	2.40	0.42	C0210-018-1000-S*	0.527	13.39	0.95	4.21	2.00	0.35
C0210-018-1250-M*	0.210	5.33	0.018	0.46	1.250	31.75	0.461	11.71	0.253	6.43	1.50	6.67	1.90	0.33	C0210-018-1250-S*	0.653	16.57	0.95	4.21	1.58	0.28
C0210-018-1500-M*	0.210	5.33	0.018	0.46	1.500	38.10	0.566	14.38	0.294	7.47	1.50	6.67	1.60	0.28	C0210-018-1500-S*	0.790	20.08	0.95	4.21	1.33	0.23
C0210-018-1750-M*	0.210	5.33	0.018	0.46	1.750	44.45	0.679	17.25	0.334	8.48	1.50	6.67	1.40	0.25	C0210-018-1750-S*	0.939	23.85	0.95	4.21	1.17	0.20
C0210-018-2000-M*	0.210	5.33	0.018	0.46	2.000	50.80	0.748	19.00	0.375	9.53	1.50	6.67	1.20	0.21	C0210-018-2000-S*	1.054	26.77	0.95	4.21	1.00	0.18
C0210-022-0250-M	0.210	5.33	0.022	0.56	0.250	6.35	0.140	3.56	0.113	2.87	2.59	11.52	23.60	4.13	C0210-022-0250-S	0.165	4.20	1.66	7.40	19.66	3.44
C0210-022-0310-M	0.210	5.33	0.022	0.56	0.310	7.87	0.168	4.27	0.127	3.23	2.59	11.52	18.30	3.20	C0210-022-0310-S	0.201	5.10	1.66	7.40	15.24	2.67
C0210-022-0380-M	0.210	5.33	0.022	0.56	0.380	9.65	0.201	5.11	0.143	3.63	2.59	11.52	14.50	2.54	C0210-022-0380-S	0.242	6.15	1.66	7.40	12.08	2.11
C0210-022-0440-M	0.210	5.33	0.022	0.56	0.440	11.18	0.229	5.82	0.157	3.99	2.59	11.52	12.30	2.15	C0210-022-0440-S	0.278	7.05	1.66	7.40	10.25	1.79
C0210-022-0500-M	0.210	5.33	0.022	0.56	0.500	12.70	0.257	6.53	0.170	4.32	2.59	11.52	10.70	1.87	C0210-022-0500-S	0.313	7.96	1.66	7.40	8.91	1.56
C0210-022-0560-M	0.210	5.33	0.022	0.56	0.560	14.22	0.285	7.24	0.184	4.67	2.59	11.52	9.40	1.65	C0210-022-0560-S	0.348	8.83	1.66	7.40	7.83	1.37
C0210-022-0620-M	0.210	5.33	0.022	0.56	0.620	15.75	0.314	7.98	0.198	5.03	2.59	11.52	8.50	1.49	C0210-022-0620-S	0.385	9.78	1.66	7.40	7.08	1.24
C0210-022-0690-M	0.210	5.33	0.022	0.56	0.690	17.53	0.346	8.79	0.214	5.44	2.59	11.52	7.50	1.31	C0210-022-0690-S	0.424	10.76	1.66	7.40	6.25	1.09
C0210-022-0750-M	0.210	5.33	0.022	0.56	0.750	19.05	0.374	9.50	0.228	5.79	2.59	11.52	6.90	1.21	C0210-022-0750-S	0.461	11.70	1.66	7.40	5.75	1.01

FOR INFORMATION ON ALTERNATIVE FINISHES, SEE PAGE 311

Part Numbers with an "*" are squared and not ground. **Part Numbers in bold** represent the newly expanded Associated Spring RAYMOND compression spring offering.

(OD) 0.210 - 0.218

MUSIC WIRE															STAINLESS STEEL					
Catalog #	Outside Diameter (OD)		Wire Diameter (d)		Free Length (L) Approx		Load Length (L_1)		Solid Height (Sh) Approx		Load (P) at L_1		Spring Rate (R)		Catalog #	Load Length (L_1)		Load (P) at L_1		Spring Rate (R)	
	in	mm	in	mm	in	mm	in	mm	in	mm	lb	N	lb/in	N/mm		in	mm	lb	N	lb/in	N/mm
C0210-022-0810-M	0.210	5.33	0.022	0.56	0.810	20.57	0.402	10.21	0.241	6.12	2.59	11.52	6.40	1.12	C0210-022-0810-S	0.498	12.65	1.66	7.40	5.33	0.93
C0210-022-0880-M	0.210	5.33	0.022	0.56	0.880	22.35	0.435	11.05	0.257	6.53	2.59	11.52	5.80	1.02	C0210-022-0880-S	0.536	13.61	1.66	7.40	4.83	0.85
C0210-022-1000-M	0.210	5.33	0.022	0.56	1.000	25.40	0.491	12.47	0.285	7.24	2.59	11.52	5.10	0.89	C0210-022-1000-S	0.608	15.46	1.66	7.40	4.25	0.74
C0210-022-1250-M	0.210	5.33	0.022	0.56	1.250	31.75	0.608	15.44	0.342	8.69	2.59	11.52	4.00	0.70	C0210-022-1250-S	0.751	19.07	1.66	7.40	3.33	0.58
C0210-022-1500-M	0.210	5.33	0.022	0.56	1.500	38.10	0.715	18.16	0.399	10.13	2.59	11.52	3.30	0.58	C0210-022-1500-S	0.895	22.73	1.66	7.40	2.75	0.48
C0210-022-1750-M	0.210	5.33	0.022	0.56	1.750	44.45	0.857	21.77	0.456	11.58	2.59	11.52	2.90	0.51	C0210-022-1750-S	1.061	26.96	1.66	7.40	2.42	0.42
C0210-022-2000-M	0.210	5.33	0.022	0.56	2.000	50.80	0.959	24.36	0.514	13.06	2.59	11.52	2.50	0.44	C0210-022-2000-S	1.201	30.51	1.66	7.40	2.08	0.36
C0210-026-0250-M	0.210	5.33	0.026	0.66	0.250	6.35	0.156	3.96	0.140	3.56	4.14	18.42	44.10	7.72	C0210-026-0250-S	0.177	4.49	2.69	11.95	36.74	6.43
C0210-026-0310-M	0.210	5.33	0.026	0.66	0.310	7.87	0.188	4.78	0.159	4.04	4.14	18.42	33.90	5.93	C0210-026-0310-S	0.215	5.46	2.69	11.95	28.24	4.94
C0210-026-0380-M	0.210	5.33	0.026	0.66	0.380	9.65	0.225	5.72	0.181	4.60	4.14	18.42	26.60	4.66	C0210-026-0380-S	0.259	6.57	2.69	11.95	22.16	3.88
C0210-026-0440-M	0.210	5.33	0.026	0.66	0.440	11.18	0.256	6.50	0.200	5.08	4.14	18.42	22.50	3.94	C0210-026-0440-S	0.297	7.53	2.69	11.95	18.74	3.28
C0210-026-0500-M	0.210	5.33	0.026	0.66	0.500	12.70	0.288	7.32	0.219	5.56	4.14	18.42	19.50	3.41	C0210-026-0500-S	0.335	8.50	2.69	11.95	16.24	2.84
C0210-026-0560-M	0.210	5.33	0.026	0.66	0.560	14.22	0.320	8.13	0.237	6.02	4.14	18.42	17.20	3.01	C0210-026-0560-S	0.372	9.46	2.69	11.95	14.33	2.51
C0210-026-0620-M	0.210	5.33	0.026	0.66	0.620	15.75	0.351	8.92	0.256	6.50	4.14	18.42	15.40	2.70	C0210-026-0620-S	0.411	10.43	2.69	11.95	12.83	2.24
C0210-026-0690-M	0.210	5.33	0.026	0.66	0.690	17.53	0.388	9.86	0.278	7.06	4.14	18.42	13.70	2.40	C0210-026-0690-S	0.455	11.55	2.69	11.95	11.41	2.00
C0210-026-0750-M	0.210	5.33	0.026	0.66	0.750	19.05	0.420	10.67	0.297	7.54	4.14	18.42	12.50	2.19	C0210-026-0750-S	0.492	12.50	2.69	11.95	10.41	1.82
C0210-026-0810-M	0.210	5.33	0.026	0.66	0.810	20.57	0.451	11.46	0.316	8.03	4.14	18.42	11.50	2.01	C0210-026-0810-S	0.529	13.45	2.69	11.95	9.58	1.68
C0210-026-0880-M	0.210	5.33	0.026	0.66	0.880	22.35	0.488	12.40	0.338	8.59	4.14	18.42	10.50	1.84	C0210-026-0880-S	0.573	14.55	2.69	11.95	8.75	1.53
C0210-026-1000-M	0.210	5.33	0.026	0.66	1.000	25.40	0.551	14.00	0.376	9.55	4.14	18.42	9.20	1.61	C0210-026-1000-S	0.649	16.49	2.69	11.95	7.66	1.34
C0210-026-1250-M	0.210	5.33	0.026	0.66	1.250	31.75	0.683	17.35	0.454	11.53	4.14	18.42	7.30	1.28	C0210-026-1250-S	0.808	20.53	2.69	11.95	6.08	1.06
C0210-026-1500-M	0.210	5.33	0.026	0.66	1.500	38.10	0.814	20.68	0.533	13.54	4.14	18.42	6.00	1.05	C0210-026-1500-S	0.962	24.44	2.69	11.95	5.00	0.87
C0210-026-1750-M	0.210	5.33	0.026	0.66	1.750	44.45	0.946	24.03	0.611	15.52	4.14	18.42	5.10	0.89	C0210-026-1750-S	1.117	28.38	2.69	11.95	4.25	0.74
C0210-026-2000-M	0.210	5.33	0.026	0.66	2.000	50.80	1.078	27.38	0.689	17.50	4.14	18.42	4.50	0.79	C0210-026-2000-S	1.283	32.59	2.69	11.95	3.75	0.66
D11050*	0.213	5.40	0.016	0.40	0.413	10.50	0.126	3.20	0.102	2.60	0.98	4.36	3.43	0.60	D21050*	0.126	3.20	0.82	3.63	2.86	0.50
D11060*	0.213	5.40	0.016	0.40	0.630	16.00	0.177	4.50	0.134	3.40	0.98	4.36	2.17	0.38	D21060*	0.177	4.50	0.82	3.63	1.83	0.32
D11070*	0.213	5.40	0.016	0.40	0.945	24.00	0.252	6.40	0.181	4.60	0.98	4.36	1.43	0.25	D21070*	0.252	6.40	0.82	3.63	1.20	0.21
D11080*	0.213	5.40	0.016	0.40	1.378	35.00	0.354	9.00	0.244	6.20	0.98	4.36	0.97	0.17	D21080*	0.354	9.00	0.82	3.63	0.80	0.14
D11090*	0.213	5.40	0.016	0.40	2.087	53.00	0.504	12.80	0.339	8.60	0.98	4.36	0.63	0.11	D21090*	0.504	12.80	0.82	3.63	0.51	0.09
D11240*	0.217	5.50	0.020	0.50	0.370	9.40	0.154	3.90	0.128	3.25	1.81	8.04	8.34	1.46	D21240*	0.154	3.90	1.51	6.70	6.97	1.22
D11260*	0.217	5.50	0.020	0.50	0.551	14.00	0.213	5.40	0.167	4.25	1.81	8.04	5.31	0.93	D21260*	0.213	5.40	1.51	6.70	4.40	0.77
D11270*	0.217	5.50	0.020	0.50	0.807	20.50	0.299	7.60	0.226	5.75	1.81	8.04	3.49	0.61	D21270*	0.299	7.60	1.51	6.70	2.91	0.51
D11280*	0.217	5.50	0.020	0.50	1.181	30.00	0.417	10.60	0.305	7.75	1.81	8.04	2.34	0.41	D21280*	0.417	10.60	1.51	6.70	1.94	0.34
D11290*	0.217	5.50	0.020	0.50	1.752	44.50	0.594	15.10	0.423	10.75	1.81	8.04	1.54	0.27	D21290*	0.594	15.10	1.51	6.70	1.26	0.22
C0218-010-0250-M*	**0.218**	**5.54**	**0.010**	**0.25**	**0.250**	**6.35**	**0.072**	**1.83**	**0.042**	**1.08**	**0.21**	**0.94**	**1.19**	**0.21**	**C0218-010-0250-S***	**0.072**	**1.83**	**0.18**	**0.79**	**0.99**	**0.17**
C0218-010-0313-M*	**0.218**	**5.54**	**0.010**	**0.25**	**0.313**	**7.95**	**0.085**	**2.16**	**0.047**	**1.20**	**0.21**	**0.93**	**0.92**	**0.16**	**C0218-010-0313-S***	**0.085**	**2.16**	**0.17**	**0.78**	**0.77**	**0.13**
C0218-010-0375-M*	**0.218**	**5.54**	**0.010**	**0.25**	**0.375**	**9.53**	**0.098**	**2.48**	**0.051**	**1.30**	**0.21**	**0.94**	**0.76**	**0.13**	**C0218-010-0375-S***	**0.098**	**2.48**	**0.18**	**0.78**	**0.63**	**0.11**
C0218-010-0438-M*	**0.218**	**5.54**	**0.010**	**0.25**	**0.438**	**11.13**	**0.111**	**2.82**	**0.056**	**1.42**	**0.21**	**0.93**	**0.64**	**0.11**	**C0218-010-0438-S***	**0.111**	**2.82**	**0.17**	**0.78**	**0.53**	**0.09**
C0218-010-0500-M*	**0.218**	**5.54**	**0.010**	**0.25**	**0.500**	**12.70**	**0.124**	**3.15**	**0.060**	**1.53**	**0.21**	**0.93**	**0.56**	**0.10**	**C0218-010-0500-S***	**0.124**	**3.15**	**0.17**	**0.77**	**0.46**	**0.08**
C0218-010-0563-M*	**0.218**	**5.54**	**0.010**	**0.25**	**0.563**	**14.30**	**0.137**	**3.48**	**0.065**	**1.65**	**0.21**	**0.93**	**0.49**	**0.09**	**C0218-010-0563-S***	**0.137**	**3.48**	**0.17**	**0.78**	**0.41**	**0.07**
C0218-010-0625-M*	**0.218**	**5.54**	**0.010**	**0.25**	**0.625**	**15.88**	**0.150**	**3.81**	**0.069**	**1.76**	**0.21**	**0.93**	**0.44**	**0.08**	**C0218-010-0625-S***	**0.150**	**3.81**	**0.17**	**0.77**	**0.37**	**0.06**
C0218-010-0750-M*	**0.218**	**5.54**	**0.010**	**0.25**	**0.750**	**19.05**	**0.175**	**4.46**	**0.078**	**1.97**	**0.21**	**0.93**	**0.36**	**0.06**	**C0218-010-0750-S***	**0.175**	**4.46**	**0.17**	**0.77**	**0.30**	**0.05**
C0218-010-0875-M*	**0.218**	**5.54**	**0.010**	**0.25**	**0.875**	**22.23**	**0.201**	**5.10**	**0.086**	**2.18**	**0.21**	**0.93**	**0.31**	**0.05**	**C0218-010-0875-S***	**0.201**	**5.10**	**0.17**	**0.77**	**0.26**	**0.04**
C0218-010-1000-M*	**0.218**	**5.54**	**0.010**	**0.25**	**1.000**	**25.40**	**0.226**	**5.74**	**0.094**	**2.38**	**0.21**	**0.93**	**0.27**	**0.05**	**C0218-010-1000-S***	**0.226**	**5.74**	**0.17**	**0.77**	**0.23**	**0.04**
C0218-010-1250-M*	**0.218**	**5.54**	**0.010**	**0.25**	**1.250**	**31.75**	**0.276**	**7.02**	**0.110**	**2.79**	**0.21**	**0.93**	**0.21**	**0.04**	**C0218-010-1250-S***	**0.276**	**7.02**	**0.17**	**0.77**	**0.18**	**0.03**
C0218-010-1500-M*	**0.218**	**5.54**	**0.010**	**0.25**	**1.500**	**38.10**	**0.327**	**8.30**	**0.126**	**3.19**	**0.21**	**0.93**	**0.18**	**0.03**	**C0218-010-1500-S***	**0.327**	**8.30**	**0.17**	**0.77**	**0.15**	**0.03**
C0218-010-1750-M*	**0.218**	**5.54**	**0.010**	**0.25**	**1.750**	**44.45**	**0.377**	**9.58**	**0.142**	**3.60**	**0.21**	**0.93**	**0.15**	**0.03**	**C0218-010-1750-S***	**0.377**	**9.58**	**0.17**	**0.77**	**0.13**	**0.02**
C0218-011-0250-M*	**0.218**	**5.54**	**0.011**	**0.28**	**0.250**	**6.35**	**0.077**	**1.96**	**0.049**	**1.24**	**0.27**	**1.21**	**1.57**	**0.28**	**C0218-011-0250-S***	**0.077**	**1.96**	**0.23**	**1.01**	**1.31**	**0.23**
C0218-011-0313-M*	**0.218**	**5.54**	**0.011**	**0.28**	**0.313**	**7.95**	**0.091**	**2.31**	**0.055**	**1.39**	**0.27**	**1.20**	**1.22**	**0.21**	**C0218-011-0313-S***	**0.091**	**2.31**	**0.22**	**1.00**	**1.01**	**0.18**
C0218-011-0375-M*	**0.218**	**5.54**	**0.011**	**0.28**	**0.375**	**9.53**	**0.105**	**2.66**	**0.060**	**1.52**	**0.27**	**1.21**	**1.00**	**0.18**	**C0218-011-0375-S***	**0.105**	**2.66**	**0.23**	**1.01**	**0.84**	**0.15**
C0218-011-0438-M*	**0.218**	**5.54**	**0.011**	**0.28**	**0.438**	**11.13**	**0.119**	**3.02**	**0.066**	**1.66**	**0.27**	**1.20**	**0.85**	**0.15**	**C0218-011-0438-S***	**0.119**	**3.02**	**0.22**	**1.00**	**0.71**	**0.12**
C0218-011-0500-M*	**0.218**	**5.54**	**0.011**	**0.28**	**0.500**	**12.70**	**0.132**	**3.36**	**0.071**	**1.80**	**0.27**	**1.20**	**0.73**	**0.13**	**C0218-011-0500-S***	**0.132**	**3.36**	**0.22**	**1.00**	**0.61**	**0.11**
C0218-011-0563-M*	**0.218**	**5.54**	**0.011**	**0.28**	**0.563**	**14.30**	**0.146**	**3.72**	**0.076**	**1.94**	**0.27**	**1.20**	**0.65**	**0.11**	**C0218-011-0563-S***	**0.146**	**3.72**	**0.23**	**1.00**	**0.54**	**0.09**
C0218-011-0625-M*	**0.218**	**5.54**	**0.011**	**0.28**	**0.625**	**15.88**	**0.160**	**4.06**	**0.082**	**2.08**	**0.27**	**1.20**	**0.58**	**0.10**	**C0218-011-0625-S***	**0.160**	**4.06**	**0.23**	**1.00**	**0.48**	**0.08**
C0218-011-0750-M*	**0.218**	**5.54**	**0.011**	**0.28**	**0.750**	**19.05**	**0.187**	**4.74**	**0.092**	**2.33**	**0.27**	**1.20**	**0.48**	**0.08**	**C0218-011-0750-S***	**0.187**	**4.74**	**0.23**	**1.00**	**0.40**	**0.07**
C0218-011-0875-M*	**0.218**	**5.54**	**0.011**	**0.28**	**0.875**	**22.23**	**0.214**	**5.42**	**0.102**	**2.58**	**0.27**	**1.20**	**0.41**	**0.07**	**C0218-011-0875-S***	**0.214**	**5.42**	**0.23**	**1.00**	**0.34**	**0.06**
C0218-011-1000-M*	**0.218**	**5.54**	**0.011**	**0.28**	**1.000**	**25.40**	**0.240**	**6.11**	**0.112**	**2.84**	**0.27**	**1.20**	**0.36**	**0.06**	**C0218-011-1000-S***	**0.240**	**6.11**	**0.23**	**1.00**	**0.30**	**0.05**
C0218-011-1250-M*	**0.218**	**5.54**	**0.011**	**0.28**	**1.250**	**31.75**	**0.294**	**7.47**	**0.131**	**3.34**	**0.27**	**1.20**	**0.28**	**0.05**	**C0218-011-1250-S***	**0.294**	**7.47**	**0.23**	**1.00**	**0.24**	**0.04**
C0218-011-1500-M*	**0.218**	**5.54**	**0.011**	**0.28**	**1.500**	**38.10**	**0.347**	**8.83**	**0.151**	**3.84**	**0.27**	**1.20**	**0.24**	**0.04**	**C0218-011-1500-S***	**0.347**	**8.83**	**0.23**	**1.00**	**0.20**	**0.03**
C0218-011-1750-M*	**0.218**	**5.54**	**0.011**	**0.28**	**1.750**	**44.45**	**0.401**	**10.18**	**0.171**	**4.34**	**0.27**	**1.21**	**0.20**	**0.04**	**C0218-011-1750-S***	**0.401**	**10.18**	**0.23**	**1.00**	**0.17**	**0.03**
C0218-012-0250-M*	**0.218**	**5.54**	**0.012**	**0.31**	**0.250**	**6.35**	**0.086**	**2.20**	**0.049**	**1.25**	**0.46**	**2.04**	**2.81**	**0.49**	**C0218-012-0250-S***	**0.107**	**2.73**	**0.33**	**1.49**	**2.34**	**0.41**
C0218-012-0313-M*	**0.218**	**5.54**	**0.012**	**0.31**	**0.313**	**7.95**	**0.101**	**2.57**	**0.054**	**1.38**	**0.46**	**2.04**	**2.17**	**0.38**	**C0218-012-0313-S***	**0.128**	**3.26**	**0.33**	**1.49**	**1.81**	**0.32**
C0218-012-0375-M*	**0.218**	**5.54**	**0.012**	**0.31**	**0.375**	**9.53**	**0.115**	**2.93**	**0.059**	**1.50**	**0.46**	**2.04**	**1.77**	**0.31**	**C0218-012-0375-S***	**0.149**	**3.77**	**0.33**	**1.49**	**1.47**	**0.26**
C0218-012-0438-M*	**0.218**	**5.54**	**0.012**	**0.31**	**0.438**	**11.13**	**0.132**	**3.34**	**0.064**	**1.63**	**0.46**	**2.04**	**1.50**	**0.26**	**C0218-012-0438-S***	**0.171**	**4.34**	**0.33**	**1.49**	**1.25**	**0.22**
C0218-012-0500-M*	**0.218**	**5.54**	**0.012**	**0.31**	**0.500**	**12.70**	**0.146**	**3.72**	**0.069**	**1.75**	**0.46**	**2.04**	**1.30**	**0.23**	**C0218-012-0500-S***	**0.192**	**4.87**	**0.33**	**1.49**	**1.08**	**0.19**

Part Numbers with an "*" are squared and not ground. **Part Numbers in bold** represent the newly expanded Associated Spring RAYMOND compression spring offering.

MUSIC WIRE															STAINLESS STEEL						
Catalog #	Outside Diameter (OD)		Wire Diameter (d)		Free Length (L) Approx		Load Length (L_1)		Solid Height (Sh) Approx		Load (P) at L_1		Spring Rate (R)		Catalog #	Load Length (L_1)		Load (P) at L_1		Spring Rate (R)	
	in	mm	in	mm	in	mm	in	mm	in	mm	lb	N	lb/in	N/mm		in	mm	lb	N	lb/in	N/mm
C0218-012-0563-M*	**0.218**	**5.54**	**0.012**	**0.31**	**0.563**	**14.30**	**0.160**	**4.06**	**0.074**	**1.88**	**0.46**	**2.04**	**1.14**	**0.20**	**C0218-012-0563-S***	**0.211**	**5.37**	**0.33**	**1.49**	**0.95**	**0.17**
C0218-012-0625-M*	**0.218**	**5.54**	**0.012**	**0.31**	**0.625**	**15.88**	**0.174**	**4.43**	**0.079**	**2.01**	**0.46**	**2.04**	**1.02**	**0.18**	**C0218-012-0625-S***	**0.232**	**5.89**	**0.33**	**1.49**	**0.85**	**0.15**
C0218-012-0750-M*	**0.218**	**5.54**	**0.012**	**0.31**	**0.750**	**19.05**	**0.203**	**5.15**	**0.089**	**2.26**	**0.46**	**2.04**	**0.84**	**0.15**	**C0218-012-0750-S***	**0.273**	**6.93**	**0.33**	**1.49**	**0.70**	**0.12**
C0218-012-0875-M*	**0.218**	**5.54**	**0.012**	**0.31**	**0.875**	**22.23**	**0.237**	**6.01**	**0.097**	**2.48**	**0.46**	**2.04**	**0.72**	**0.13**	**C0218-012-0875-S***	**0.318**	**8.08**	**0.33**	**1.49**	**0.60**	**0.11**
C0218-012-1000-M*	**0.218**	**5.54**	**0.012**	**0.31**	**1.000**	**25.40**	**0.259**	**6.57**	**0.107**	**2.72**	**0.46**	**2.04**	**0.62**	**0.11**	**C0218-012-1000-S***	**0.353**	**8.98**	**0.33**	**1.49**	**0.52**	**0.09**
C0218-012-1250-M*	**0.218**	**5.54**	**0.012**	**0.31**	**1.250**	**31.75**	**0.331**	**8.40**	**0.124**	**3.14**	**0.46**	**2.04**	**0.50**	**0.09**	**C0218-012-1250-S***	**0.448**	**11.39**	**0.33**	**1.49**	**0.42**	**0.07**
C0218-012-1500-M*	**0.218**	**5.54**	**0.012**	**0.31**	**1.500**	**38.10**	**0.379**	**9.63**	**0.143**	**3.62**	**0.46**	**2.04**	**0.41**	**0.07**	**C0218-012-1500-S***	**0.522**	**13.27**	**0.33**	**1.49**	**0.34**	**0.06**
C0218-012-1750-M*	**0.218**	**5.54**	**0.012**	**0.31**	**1.750**	**44.45**	**0.437**	**11.10**	**0.161**	**4.08**	**0.46**	**2.04**	**0.35**	**0.06**	**C0218-012-1750-S***	**0.605**	**15.36**	**0.33**	**1.49**	**0.29**	**0.05**
C0218-013-0250-M*	**0.218**	**5.54**	**0.013**	**0.33**	**0.250**	**6.35**	**0.091**	**2.30**	**0.066**	**1.67**	**0.37**	**1.67**	**2.35**	**0.41**	**C0218-013-0250-S***	**0.091**	**2.30**	**0.31**	**1.39**	**1.96**	**0.34**
C0218-013-0313-M*	**0.218**	**5.54**	**0.013**	**0.33**	**0.313**	**7.95**	**0.108**	**2.73**	**0.075**	**1.90**	**0.37**	**1.65**	**1.81**	**0.32**	**C0218-013-0313-S***	**0.108**	**2.73**	**0.31**	**1.38**	**1.51**	**0.26**
C0218-013-0375-M*	**0.218**	**5.54**	**0.013**	**0.33**	**0.375**	**9.53**	**0.124**	**3.15**	**0.084**	**2.13**	**0.37**	**1.65**	**1.48**	**0.26**	**C0218-013-0375-S***	**0.124**	**3.15**	**0.31**	**1.38**	**1.23**	**0.22**
C0218-013-0438-M*	**0.218**	**5.54**	**0.013**	**0.33**	**0.438**	**11.13**	**0.141**	**3.58**	**0.093**	**2.37**	**0.37**	**1.64**	**1.24**	**0.22**	**C0218-013-0438-S***	**0.141**	**3.58**	**0.31**	**1.36**	**1.03**	**0.18**
C0218-013-0500-M*	**0.218**	**5.54**	**0.013**	**0.33**	**0.500**	**12.70**	**0.157**	**3.99**	**0.101**	**2.57**	**0.37**	**1.65**	**1.08**	**0.19**	**C0218-013-0500-S***	**0.157**	**3.99**	**0.31**	**1.37**	**0.90**	**0.16**
C0218-013-0563-M*	**0.218**	**5.54**	**0.013**	**0.33**	**0.563**	**14.30**	**0.173**	**4.40**	**0.109**	**2.78**	**0.37**	**1.65**	**0.95**	**0.17**	**C0218-013-0563-S***	**0.173**	**4.40**	**0.31**	**1.37**	**0.79**	**0.14**
C0218-013-0625-M*	**0.218**	**5.54**	**0.013**	**0.33**	**0.625**	**15.88**	**0.189**	**4.80**	**0.117**	**2.98**	**0.37**	**1.65**	**0.85**	**0.15**	**C0218-013-0625-S***	**0.189**	**4.80**	**0.31**	**1.37**	**0.71**	**0.12**
C0218-013-0750-M*	**0.218**	**5.54**	**0.013**	**0.33**	**0.750**	**19.05**	**0.221**	**5.61**	**0.134**	**3.40**	**0.37**	**1.65**	**0.70**	**0.12**	**C0218-013-0750-S***	**0.221**	**5.61**	**0.31**	**1.37**	**0.58**	**0.10**
C0218-013-0875-M*	**0.218**	**5.54**	**0.013**	**0.33**	**0.875**	**22.23**	**0.254**	**6.44**	**0.151**	**3.84**	**0.37**	**1.63**	**0.59**	**0.10**	**C0218-013-0875-S***	**0.254**	**6.44**	**0.31**	**1.36**	**0.49**	**0.09**
C0218-013-1000-M*	**0.218**	**5.54**	**0.013**	**0.33**	**1.000**	**25.40**	**0.284**	**7.22**	**0.166**	**4.22**	**0.37**	**1.66**	**0.52**	**0.09**	**C0218-013-1000-S***	**0.284**	**7.22**	**0.31**	**1.38**	**0.43**	**0.08**
C0218-013-1250-M*	**0.218**	**5.54**	**0.013**	**0.33**	**1.250**	**31.75**	**0.349**	**8.87**	**0.200**	**5.07**	**0.37**	**1.64**	**0.41**	**0.07**	**C0218-013-1250-S***	**0.349**	**8.87**	**0.31**	**1.37**	**0.34**	**0.06**
C0218-013-1500-M*	**0.218**	**5.54**	**0.013**	**0.33**	**1.500**	**38.10**	**0.413**	**10.49**	**0.232**	**5.90**	**0.37**	**1.64**	**0.34**	**0.06**	**C0218-013-1500-S***	**0.413**	**10.49**	**0.31**	**1.37**	**0.28**	**0.05**
C0218-013-1750-M*	**0.218**	**5.54**	**0.013**	**0.33**	**1.750**	**44.45**	**0.477**	**12.12**	**0.265**	**6.74**	**0.37**	**1.64**	**0.29**	**0.05**	**C0218-013-1750-S***	**0.477**	**12.12**	**0.31**	**1.37**	**0.24**	**0.04**
C0219-020-0250-M*	**0.219**	**5.56**	**0.020**	**0.51**	**0.250**	**6.35**	**0.121**	**3.06**	**0.099**	**2.52**	**1.94**	**8.63**	**15.00**	**2.63**	**C0219-020-0250-S***	**0.134**	**3.41**	**1.45**	**6.43**	**12.50**	**2.19**
C0219-020-0410-M*	**0.219**	**5.56**	**0.020**	**0.51**	**0.410**	**10.41**	**0.210**	**5.33**	**0.124**	**3.15**	**1.94**	**8.63**	**9.70**	**1.70**	**C0219-020-0410-S***	**0.231**	**5.87**	**1.45**	**6.43**	**8.08**	**1.41**
C0219-020-0500-M*	**0.219**	**5.56**	**0.020**	**0.51**	**0.500**	**12.70**	**0.234**	**5.95**	**0.147**	**3.73**	**1.94**	**8.63**	**7.30**	**1.28**	**C0219-020-0500-S***	**0.262**	**6.66**	**1.45**	**6.43**	**6.08**	**1.06**
C0219-020-0560-M*	**0.219**	**5.56**	**0.020**	**0.51**	**0.560**	**14.22**	**0.253**	**6.43**	**0.209**	**5.31**	**1.29**	**5.73**	**4.20**	**0.74**	**C0219-020-0560-S***	**0.253**	**6.43**	**1.07**	**4.78**	**3.50**	**0.61**
C0219-020-0590-M*	**0.219**	**5.56**	**0.020**	**0.51**	**0.590**	**14.99**	**0.241**	**6.12**	**0.188**	**4.78**	**1.71**	**7.61**	**4.90**	**0.86**	**C0219-020-0590-S***	**0.241**	**6.12**	**1.43**	**6.34**	**4.08**	**0.71**
C0219-020-0660-M*	**0.219**	**5.56**	**0.020**	**0.51**	**0.660**	**16.76**	**0.264**	**6.70**	**0.188**	**4.78**	**1.94**	**8.63**	**4.90**	**0.86**	**C0219-020-0660-S***	**0.306**	**7.77**	**1.45**	**6.43**	**4.08**	**0.71**
C0219-020-0750-M*	**0.219**	**5.56**	**0.020**	**0.51**	**0.750**	**19.05**	**0.354**	**8.99**	**0.188**	**4.78**	**1.94**	**8.63**	**4.90**	**0.86**	**C0219-020-0750-S***	**0.396**	**10.05**	**1.45**	**6.43**	**4.08**	**0.71**
C0219-020-1000-M*	**0.219**	**5.56**	**0.020**	**0.51**	**1.000**	**25.40**	**0.412**	**10.46**	**0.249**	**6.32**	**1.94**	**8.63**	**3.30**	**0.58**	**C0219-020-1000-S***	**0.474**	**12.04**	**1.45**	**6.43**	**2.75**	**0.48**
C0219-020-1250-M*	**0.219**	**5.56**	**0.020**	**0.51**	**1.250**	**31.75**	**0.474**	**12.03**	**0.308**	**7.83**	**1.94**	**8.63**	**2.50**	**0.44**	**C0219-020-1250-S***	**0.556**	**14.11**	**1.45**	**6.43**	**2.08**	**0.36**
C0219-020-1380-M*	**0.219**	**5.56**	**0.020**	**0.51**	**1.380**	**35.05**	**0.506**	**12.85**	**0.369**	**9.38**	**1.75**	**7.77**	**2.00**	**0.35**	**C0219-020-1380-S***	**0.512**	**13.00**	**1.45**	**6.43**	**1.67**	**0.29**
C0219-020-1630-M*	**0.219**	**5.56**	**0.020**	**0.51**	**1.630**	**41.40**	**0.609**	**15.46**	**0.386**	**9.79**	**1.94**	**8.63**	**1.90**	**0.33**	**C0219-020-1630-S***	**0.716**	**18.19**	**1.45**	**6.43**	**1.58**	**0.28**
C0219-020-1750-M*	**0.219**	**5.56**	**0.020**	**0.51**	**1.750**	**44.45**	**0.729**	**18.51**	**0.386**	**9.79**	**1.94**	**8.63**	**1.90**	**0.33**	**C0219-020-1750-S***	**0.836**	**21.24**	**1.45**	**6.43**	**1.58**	**0.28**
C0219-025-0440-M	**0.219**	**5.56**	**0.025**	**0.64**	**0.440**	**11.18**	**0.279**	**7.08**	**0.263**	**6.67**	**1.55**	**6.89**	**9.60**	**1.68**	**C0219-025-0440-S**	**0.279**	**7.08**	**1.29**	**5.74**	**8.00**	**1.40**
C0219-025-0500-M	**0.219**	**5.56**	**0.025**	**0.64**	**0.500**	**12.70**	**0.243**	**6.18**	**0.208**	**5.28**	**3.34**	**14.85**	**13.00**	**2.28**	**C0219-025-0500-S**	**0.249**	**6.32**	**2.72**	**12.11**	**10.83**	**1.90**
C0219-025-0590-M	**0.219**	**5.56**	**0.025**	**0.64**	**0.590**	**14.99**	**0.280**	**7.10**	**0.236**	**6.00**	**3.41**	**15.19**	**11.00**	**1.93**	**C0219-025-0590-S**	**0.293**	**7.44**	**2.72**	**12.11**	**9.16**	**1.60**
C0219-025-0630-M	**0.219**	**5.56**	**0.025**	**0.64**	**0.630**	**16.00**	**0.349**	**8.87**	**0.315**	**7.99**	**2.16**	**9.62**	**7.70**	**1.35**	**C0219-025-0630-S**	**0.349**	**8.87**	**1.80**	**8.01**	**6.41**	**1.12**
C0219-025-0750-M	**0.219**	**5.56**	**0.025**	**0.64**	**0.750**	**19.05**	**0.348**	**8.83**	**0.277**	**7.03**	**3.62**	**16.11**	**9.00**	**1.58**	**C0219-025-0750-S**	**0.387**	**9.83**	**2.72**	**12.11**	**7.50**	**1.31**
C0219-025-1000-M	**0.219**	**5.56**	**0.025**	**0.64**	**1.000**	**25.40**	**0.530**	**13.46**	**0.315**	**7.99**	**3.62**	**16.11**	**7.70**	**1.35**	**C0219-025-1000-S**	**0.576**	**14.62**	**2.72**	**12.11**	**6.41**	**1.12**
C0219-025-1500-M	**0.219**	**5.56**	**0.025**	**0.64**	**1.500**	**38.10**	**0.746**	**18.94**	**0.473**	**12.02**	**3.62**	**16.11**	**4.80**	**0.84**	**C0219-025-1500-S**	**0.819**	**20.81**	**2.72**	**12.11**	**4.00**	**0.70**
D11450*	0.222	5.63	0.025	0.63	0.335	8.50	0.169	4.30	0.161	4.10	3.48	15.49	21.09	3.69	D21450*	0.169	4.30	2.90	12.90	17.54	3.07
D11460*	0.222	5.63	0.025	0.63	0.492	12.50	0.228	5.80	0.211	5.36	3.48	15.49	13.43	2.35	D21460*	0.228	5.80	2.90	12.90	11.20	1.96
D11470*	0.222	5.63	0.025	0.63	0.728	18.50	0.323	8.20	0.285	7.25	3.48	15.49	8.86	1.55	D21470*	0.323	8.20	2.90	12.90	7.37	1.29
D11480*	0.222	5.63	0.025	0.63	1.024	26.00	0.445	11.30	0.385	9.77	3.48	15.49	5.89	1.03	D21480*	0.445	11.30	2.90	12.90	4.91	0.86
D11490*	0.222	5.63	0.025	0.63	1.516	38.50	0.638	16.20	0.533	13.55	3.48	15.49	4.00	0.70	D21490*	0.638	16.20	2.90	12.90	3.31	0.58
D11650*	0.228	5.80	0.031	0.80	0.327	8.30	0.220	5.60	0.205	5.20	5.84	25.99	54.46	9.53	D21650*	0.220	5.60	4.87	21.65	45.37	7.94
D11660*	0.228	5.80	0.031	0.80	0.472	12.00	0.303	7.70	0.268	6.80	5.84	25.99	34.69	6.07	D21660*	0.303	7.70	4.87	21.65	28.91	5.06
D11670*	0.228	5.80	0.031	0.80	0.689	17.50	0.429	10.90	0.362	9.20	5.84	25.99	22.40	3.92	D21670*	0.429	10.90	4.87	21.65	18.69	3.27
D11680*	0.228	5.80	0.031	0.80	0.965	24.50	0.594	15.10	0.488	12.40	5.84	25.99	15.26	2.67	D21680*	0.594	15.10	4.87	21.65	12.69	2.22
D11690*	0.228	5.80	0.031	0.80	1.417	36.00	0.846	21.50	0.677	17.20	5.84	25.99	10.29	1.80	D21690*	0.846	21.50	4.87	21.65	8.57	1.50
C0234-022-0470-M	**0.234**	**5.94**	**0.022**	**0.56**	**0.470**	**11.94**	**0.217**	**5.51**	**0.132**	**3.36**	**2.38**	**10.59**	**9.40**	**1.65**	**C0234-022-0470-S**	**0.243**	**6.16**	**1.78**	**7.92**	**7.83**	**1.37**
C0234-022-0500-M	**0.234**	**5.94**	**0.022**	**0.56**	**0.500**	**12.70**	**0.229**	**5.83**	**0.139**	**3.53**	**2.38**	**10.59**	**8.80**	**1.54**	**C0234-022-0500-S**	**0.257**	**6.53**	**1.78**	**7.92**	**7.33**	**1.28**
C0234-022-0590-M	**0.234**	**5.94**	**0.022**	**0.56**	**0.590**	**14.99**	**0.268**	**6.81**	**0.157**	**3.98**	**2.38**	**10.59**	**7.40**	**1.30**	**C0234-022-0590-S**	**0.301**	**7.65**	**1.78**	**7.92**	**6.16**	**1.08**
C0234-022-0630-M	**0.234**	**5.94**	**0.022**	**0.56**	**0.630**	**16.00**	**0.242**	**6.15**	**0.182**	**4.63**	**2.33**	**10.35**	**6.00**	**1.05**	**C0234-022-0630-S**	**0.274**	**6.95**	**1.78**	**7.92**	**5.00**	**0.87**
C0234-022-0750-M	**0.234**	**5.94**	**0.022**	**0.56**	**0.750**	**19.05**	**0.315**	**8.00**	**0.250**	**6.36**	**1.74**	**7.74**	**4.00**	**0.70**	**C0234-022-0750-S**	**0.315**	**8.00**	**1.45**	**6.45**	**3.33**	**0.58**
C0234-022-0810-M	**0.234**	**5.94**	**0.022**	**0.56**	**0.810**	**20.57**	**0.348**	**8.83**	**0.279**	**7.10**	**1.62**	**7.20**	**3.50**	**0.61**	**C0234-022-0810-S**	**0.348**	**8.83**	**1.35**	**6.00**	**2.92**	**0.51**
C0234-022-1030-M	**0.234**	**5.94**	**0.022**	**0.56**	**1.030**	**26.16**	**0.428**	**10.87**	**0.338**	**8.58**	**1.69**	**7.50**	**2.80**	**0.49**	**C0234-022-1030-S**	**0.428**	**10.87**	**1.40**	**6.25**	**2.33**	**0.41**
C0234-023-0380-M	**0.234**	**5.94**	**0.023**	**0.58**	**0.380**	**9.65**	**0.211**	**5.37**	**0.109**	**2.78**	**2.70**	**11.99**	**16.00**	**2.80**	**C0234-023-0380-S**	**0.228**	**5.80**	**2.02**	**8.99**	**13.33**	**2.33**
C0234-023-0410-M	**0.234**	**5.94**	**0.023**	**0.58**	**0.410**	**10.41**	**0.176**	**4.48**	**0.142**	**3.61**	**2.57**	**11.43**	**11.00**	**1.93**	**C0234-023-0410-S**	**0.189**	**4.81**	**2.02**	**8.99**	**9.16**	**1.60**
C0234-023-0560-M	**0.234**	**5.94**	**0.023**	**0.58**	**0.560**	**14.22**	**0.241**	**6.12**	**0.194**	**4.93**	**2.26**	**10.07**	**7.10**	**1.24**	**C0234-023-0560-S**	**0.241**	**6.12**	**1.89**	**8.39**	**5.91**	**1.03**
C0234-023-0690-M	**0.234**	**5.94**	**0.023**	**0.58**	**0.690**	**17.53**	**0.337**	**8.57**	**0.289**	**7.34**	**1.52**	**6.75**	**4.30**	**0.75**	**C0234-023-0690-S**	**0.337**	**8.57**	**1.26**	**5.62**	**3.58**	**0.63**
C0234-023-1000-M	**0.234**	**5.94**	**0.023**	**0.58**	**1.000**	**25.40**	**0.404**	**10.26**	**0.313**	**7.96**	**2.33**	**10.34**	**3.90**	**0.68**	**C0234-023-1000-S**	**0.404**	**10.26**	**1.94**	**8.62**	**3.25**	**0.57**
C0234-027-0560-M	**0.234**	**5.94**	**0.027**	**0.69**	**0.560**	**14.22**	**0.326**	**8.27**	**0.192**	**4.89**	**4.22**	**18.76**	**18.00**	**3.15**	**C0234-027-0560-S**	**0.348**	**8.84**	**3.18**	**14.14**	**14.99**	**2.62**
C0234-027-0630-M	**0.234**	**5.94**	**0.027**	**0.69**	**0.630**	**16.00**	**0.306**	**7.76**	**0.245**	**6.21**	**4.22**	**18.76**	**13.00**	**2.28**	**C0234-027-0630-S**	**0.337**	**8.55**	**3.18**	**14.14**	**10.83**	**1.90**

FOR INFORMATION ON ALTERNATIVE FINISHES, SEE PAGE 311

Part Numbers with an "*" are squared and not ground. **Part Numbers in bold** represent the newly expanded Associated Spring RAYMOND compression spring offering.

(OD) 0.234 - 0.235

MUSIC WIRE															STAINLESS STEEL						
Catalog #	Outside Diameter (OD)		Wire Diameter (d)		Free Length (L) Approx		Load Length (L_1)		Solid Height (Sh) Approx		Load (P) at L_1		Spring Rate (R)		Catalog #	Load Length (L_1)		Load (P) at L_1		Spring Rate (R)	
	in	mm	in	mm	in	mm	in	mm	in	mm	lb	N	lb/in	N/mm		in	mm	lb	N	lb/in	N/mm
C0234-027-0690-M	**0.234**	**5.94**	**0.027**	**0.69**	**0.690**	**17.53**	**0.389**	**9.88**	**0.231**	**5.87**	**4.22**	**18.76**	**14.00**	**2.45**	**C0234-027-0690-S**	**0.418**	**10.60**	**3.18**	**14.14**	**11.66**	**2.04**
C0234-027-1090-M	**0.234**	**5.94**	**0.027**	**0.69**	**1.090**	**27.69**	**0.556**	**14.13**	**0.485**	**12.32**	**3.04**	**13.53**	**5.70**	**1.00**	**C0234-027-1090-S**	**0.556**	**14.13**	**2.53**	**11.27**	**4.75**	**0.83**
C0234-027-1330-M	**0.234**	**5.94**	**0.027**	**0.69**	**1.330**	**33.78**	**0.633**	**16.08**	**0.535**	**13.60**	**3.55**	**15.81**	**5.10**	**0.89**	**C0234-027-1330-S**	**0.633**	**16.08**	**2.96**	**13.17**	**4.25**	**0.74**
C0234-028-0310-M	**0.234**	**5.94**	**0.028**	**0.71**	**0.310**	**7.87**	**0.173**	**4.39**	**0.143**	**3.63**	**4.66**	**20.75**	**34.00**	**5.95**	**C0234-028-0310-S**	**0.186**	**4.72**	**3.52**	**15.66**	**28.32**	**4.96**
C0234-028-0500-M	**0.234**	**5.94**	**0.028**	**0.71**	**0.500**	**12.70**	**0.255**	**6.46**	**0.215**	**5.47**	**4.66**	**20.75**	**19.00**	**3.33**	**C0234-028-0500-S**	**0.278**	**7.05**	**3.52**	**15.66**	**15.83**	**2.77**
C0234-028-0560-M	**0.234**	**5.94**	**0.028**	**0.71**	**0.560**	**14.22**	**0.303**	**7.71**	**0.271**	**6.88**	**3.59**	**15.98**	**14.00**	**2.45**	**C0234-028-0560-S**	**0.303**	**7.71**	**2.99**	**13.31**	**11.66**	**2.04**
C0234-028-0810-M	**0.234**	**5.94**	**0.028**	**0.71**	**0.810**	**20.57**	**0.451**	**11.46**	**0.287**	**7.30**	**4.66**	**20.75**	**13.00**	**2.28**	**C0234-028-0810-S**	**0.485**	**12.32**	**3.52**	**15.66**	**10.83**	**1.90**
C0234-028-1190-M	**0.234**	**5.94**	**0.028**	**0.71**	**1.190**	**30.23**	**0.585**	**14.86**	**0.502**	**12.76**	**4.05**	**18.03**	**6.70**	**1.17**	**C0234-028-1190-S**	**0.585**	**14.86**	**3.38**	**15.02**	**5.58**	**0.98**
C0234-030-0440-M	**0.234**	**5.94**	**0.030**	**0.76**	**0.440**	**11.18**	**0.269**	**6.83**	**0.251**	**6.37**	**3.93**	**17.49**	**23.00**	**4.03**	**C0234-030-0440-S**	**0.269**	**6.83**	**3.28**	**14.57**	**19.16**	**3.35**
C0234-030-0630-M	**0.234**	**5.94**	**0.030**	**0.76**	**0.630**	**16.00**	**0.348**	**8.83**	**0.279**	**7.09**	**5.65**	**25.12**	**20.00**	**3.50**	**C0234-030-0630-S**	**0.374**	**9.49**	**4.27**	**18.99**	**16.66**	**2.92**
C0234-030-0660-M	**0.234**	**5.94**	**0.030**	**0.76**	**0.660**	**16.76**	**0.378**	**9.59**	**0.279**	**7.09**	**5.65**	**25.12**	**20.00**	**3.50**	**C0234-030-0660-S**	**0.404**	**10.26**	**4.27**	**18.99**	**16.66**	**2.92**
C0234-030-0720-M	**0.234**	**5.94**	**0.030**	**0.76**	**0.720**	**18.29**	**0.409**	**10.38**	**0.372**	**9.44**	**4.36**	**19.38**	**14.00**	**2.45**	**C0234-030-0720-S**	**0.409**	**10.38**	**3.63**	**16.14**	**11.66**	**2.04**
C0234-030-0810-M	**0.234**	**5.94**	**0.030**	**0.76**	**0.810**	**20.57**	**0.434**	**11.01**	**0.351**	**8.92**	**5.65**	**25.12**	**15.00**	**2.63**	**C0234-030-0810-S**	**0.468**	**11.90**	**4.27**	**18.99**	**12.50**	**2.19**
C0234-030-1000-M	**0.234**	**5.94**	**0.030**	**0.76**	**1.000**	**25.40**	**0.608**	**15.43**	**0.565**	**14.36**	**3.37**	**15.01**	**8.60**	**1.51**	**C0234-030-1000-S**	**0.608**	**15.43**	**2.81**	**12.50**	**7.16**	**1.25**
C0234-030-1190-M	**0.234**	**5.94**	**0.030**	**0.76**	**1.190**	**30.23**	**0.690**	**17.52**	**0.631**	**16.04**	**3.80**	**16.91**	**7.60**	**1.33**	**C0234-030-1190-S**	**0.690**	**17.52**	**3.17**	**14.09**	**6.33**	**1.11**
C0234-030-1220-M	**0.234**	**5.94**	**0.030**	**0.76**	**1.220**	**30.99**	**0.694**	**17.63**	**0.631**	**16.04**	**4.00**	**17.78**	**7.60**	**1.33**	**C0234-030-1220-S**	**0.694**	**17.63**	**3.33**	**14.81**	**6.33**	**1.11**
C0234-030-1230-M	**0.234**	**5.94**	**0.030**	**0.76**	**1.230**	**31.24**	**0.620**	**15.74**	**0.538**	**13.66**	**5.55**	**24.70**	**9.10**	**1.59**	**C0234-030-1230-S**	**0.667**	**16.94**	**4.27**	**18.99**	**7.58**	**1.33**
C0234-030-2500-M	**0.234**	**5.94**	**0.030**	**0.76**	**2.500**	**63.50**	**1.371**	**34.82**	**0.927**	**23.55**	**5.65**	**25.12**	**5.00**	**0.88**	**C0234-030-2500-S**	**1.475**	**37.47**	**4.27**	**18.99**	**4.17**	**0.73**
C0235-021-0500-M	**0.235**	**5.97**	**0.021**	**0.53**	**0.500**	**12.70**	**0.190**	**4.83**	**0.142**	**3.61**	**1.99**	**8.85**	**6.42**	**1.12**	**C0235-021-0500-S**	**0.222**	**5.63**	**1.55**	**6.91**	**5.58**	**0.98**
C0235-021-0563-M	**0.235**	**5.97**	**0.021**	**0.53**	**0.563**	**14.29**	**0.210**	**5.34**	**0.155**	**3.95**	**1.99**	**8.85**	**5.65**	**0.99**	**C0235-021-0563-S**	**0.246**	**6.25**	**1.55**	**6.91**	**4.91**	**0.86**
C0235-021-0625-M	**0.235**	**5.97**	**0.021**	**0.53**	**0.625**	**15.88**	**0.230**	**5.85**	**0.169**	**4.29**	**1.99**	**8.85**	**5.04**	**0.88**	**C0235-021-0625-S**	**0.271**	**6.87**	**1.55**	**6.91**	**4.39**	**0.77**
C0235-021-0688-M	**0.235**	**5.97**	**0.021**	**0.53**	**0.688**	**17.46**	**0.251**	**6.37**	**0.182**	**4.63**	**1.99**	**8.85**	**4.56**	**0.80**	**C0235-021-0688-S**	**0.295**	**7.50**	**1.55**	**6.91**	**3.96**	**0.69**
C0235-021-0750-M	**0.235**	**5.97**	**0.021**	**0.53**	**0.750**	**19.05**	**0.271**	**6.88**	**0.196**	**4.97**	**1.99**	**8.85**	**4.15**	**0.73**	**C0235-021-0750-S**	**0.320**	**8.12**	**1.55**	**6.91**	**3.61**	**0.63**
C0235-021-0813-M	**0.235**	**5.97**	**0.021**	**0.53**	**0.813**	**20.64**	**0.291**	**7.39**	**0.209**	**5.31**	**1.99**	**8.85**	**3.82**	**0.67**	**C0235-021-0813-S**	**0.344**	**8.74**	**1.55**	**6.91**	**3.32**	**0.58**
C0235-021-0875-M	**0.235**	**5.97**	**0.021**	**0.53**	**0.875**	**22.23**	**0.311**	**7.90**	**0.222**	**5.65**	**1.99**	**8.85**	**3.53**	**0.62**	**C0235-021-0875-S**	**0.369**	**9.37**	**1.55**	**6.91**	**3.07**	**0.54**
C0235-021-0938-M	**0.235**	**5.97**	**0.021**	**0.53**	**0.938**	**23.81**	**0.331**	**8.42**	**0.236**	**5.99**	**1.99**	**8.85**	**3.28**	**0.57**	**C0235-021-0938-S**	**0.393**	**9.99**	**1.55**	**6.91**	**2.86**	**0.50**
C0235-021-1000-M	**0.235**	**5.97**	**0.021**	**0.53**	**1.000**	**25.40**	**0.352**	**8.93**	**0.249**	**6.33**	**1.99**	**8.85**	**3.07**	**0.54**	**C0235-021-1000-S**	**0.418**	**10.61**	**1.55**	**6.91**	**2.67**	**0.47**
C0235-021-1125-M	**0.235**	**5.97**	**0.021**	**0.53**	**1.125**	**28.58**	**0.392**	**9.96**	**0.276**	**7.01**	**1.99**	**8.85**	**2.72**	**0.48**	**C0235-021-1125-S**	**0.467**	**11.86**	**1.55**	**6.91**	**2.36**	**0.41**
C0235-021-1250-M	**0.235**	**5.97**	**0.021**	**0.53**	**1.250**	**31.75**	**0.432**	**10.98**	**0.303**	**7.68**	**1.99**	**8.85**	**2.43**	**0.43**	**C0235-021-1250-S**	**0.516**	**13.10**	**1.55**	**6.91**	**2.12**	**0.37**
C0235-021-1375-M	**0.235**	**5.97**	**0.021**	**0.53**	**1.375**	**34.93**	**0.473**	**12.01**	**0.329**	**8.36**	**1.99**	**8.85**	**2.21**	**0.39**	**C0235-021-1375-S**	**0.565**	**14.35**	**1.55**	**6.91**	**1.92**	**0.34**
C0235-021-1500-M	**0.235**	**5.97**	**0.021**	**0.53**	**1.500**	**38.10**	**0.513**	**13.04**	**0.356**	**9.04**	**1.99**	**8.85**	**2.02**	**0.35**	**C0235-021-1500-S**	**0.614**	**15.59**	**1.55**	**6.91**	**1.75**	**0.31**
C0235-021-1625-M	**0.235**	**5.97**	**0.021**	**0.53**	**1.625**	**41.28**	**0.554**	**14.06**	**0.383**	**9.72**	**1.99**	**8.85**	**1.86**	**0.32**	**C0235-021-1625-S**	**0.663**	**16.84**	**1.55**	**6.91**	**1.62**	**0.28**
C0235-021-1750-M	**0.235**	**5.97**	**0.021**	**0.53**	**1.750**	**44.45**	**0.594**	**15.09**	**0.410**	**10.40**	**1.99**	**8.85**	**1.72**	**0.30**	**C0235-021-1750-S**	**0.712**	**18.08**	**1.55**	**6.91**	**1.50**	**0.26**
C0235-021-1875-M	**0.235**	**5.97**	**0.021**	**0.53**	**1.875**	**47.63**	**0.634**	**16.11**	**0.436**	**11.08**	**1.99**	**8.85**	**1.60**	**0.28**	**C0235-021-1875-S**	**0.761**	**19.33**	**1.55**	**6.91**	**1.40**	**0.24**
C0235-021-2000-M	**0.235**	**5.97**	**0.021**	**0.53**	**2.000**	**50.80**	**0.675**	**17.14**	**0.463**	**11.76**	**1.99**	**8.85**	**1.50**	**0.26**	**C0235-021-2000-S**	**0.810**	**20.57**	**1.55**	**6.91**	**1.31**	**0.23**
C0235-021-2125-M	**0.235**	**5.97**	**0.021**	**0.53**	**2.125**	**53.98**	**0.715**	**18.17**	**0.490**	**12.44**	**1.99**	**8.85**	**1.41**	**0.25**	**C0235-021-2125-S**	**0.859**	**21.82**	**1.55**	**6.91**	**1.23**	**0.21**
C0235-021-2250-M	**0.235**	**5.97**	**0.021**	**0.53**	**2.250**	**57.15**	**0.756**	**19.19**	**0.516**	**13.12**	**1.99**	**8.85**	**1.33**	**0.23**	**C0235-021-2250-S**	**0.908**	**23.06**	**1.55**	**6.91**	**1.16**	**0.20**
C0235-021-2375-M	**0.235**	**5.97**	**0.021**	**0.53**	**2.375**	**60.33**	**0.796**	**20.22**	**0.543**	**13.80**	**1.99**	**8.85**	**1.26**	**0.22**	**C0235-021-2375-S**	**0.957**	**24.31**	**1.55**	**6.91**	**1.10**	**0.19**
C0235-021-2500-M	**0.235**	**5.97**	**0.021**	**0.53**	**2.500**	**63.50**	**0.836**	**21.24**	**0.570**	**14.48**	**1.99**	**8.85**	**1.20**	**0.21**	**C0235-021-2500-S**	**1.006**	**25.55**	**1.55**	**6.91**	**1.04**	**0.18**
C0235-021-2625-M	**0.235**	**5.97**	**0.021**	**0.53**	**2.625**	**66.68**	**0.877**	**22.27**	**0.597**	**15.16**	**1.99**	**8.85**	**1.14**	**0.20**	**C0235-021-2625-S**	**1.055**	**26.80**	**1.55**	**6.91**	**0.99**	**0.17**
C0235-021-2750-M	**0.235**	**5.97**	**0.021**	**0.53**	**2.750**	**69.85**	**0.917**	**23.30**	**0.623**	**15.84**	**1.99**	**8.85**	**1.09**	**0.19**	**C0235-021-2750-S**	**1.104**	**28.04**	**1.55**	**6.91**	**0.94**	**0.17**
C0235-021-2875-M	**0.235**	**5.97**	**0.021**	**0.53**	**2.875**	**73.03**	**0.958**	**24.32**	**0.650**	**16.51**	**1.99**	**8.85**	**1.04**	**0.18**	**C0235-021-2875-S**	**1.153**	**29.29**	**1.55**	**6.91**	**0.90**	**0.16**
C0235-021-3000-M	**0.235**	**5.97**	**0.021**	**0.53**	**3.000**	**76.20**	**0.998**	**25.35**	**0.677**	**17.19**	**1.99**	**8.85**	**0.99**	**0.17**	**C0235-021-3000-S**	**1.202**	**30.54**	**1.55**	**6.91**	**0.86**	**0.15**
C0235-021-3250-M	**0.235**	**5.97**	**0.021**	**0.53**	**3.250**	**82.55**	**1.079**	**27.40**	**0.730**	**18.55**	**1.99**	**8.85**	**0.92**	**0.16**	**C0235-021-3250-S**	**1.300**	**33.03**	**1.55**	**6.91**	**0.80**	**0.14**
C0235-021-3500-M	**0.235**	**5.97**	**0.021**	**0.53**	**3.500**	**88.90**	**1.160**	**29.45**	**0.784**	**19.91**	**1.99**	**8.85**	**0.85**	**0.15**	**C0235-021-3500-S**	**1.398**	**35.52**	**1.55**	**6.91**	**0.74**	**0.13**
C0235-021-3750-M	**0.235**	**5.97**	**0.021**	**0.53**	**3.750**	**95.25**	**1.240**	**31.51**	**0.837**	**21.27**	**1.99**	**8.85**	**0.79**	**0.14**	**C0235-021-3750-S**	**1.496**	**38.01**	**1.55**	**6.91**	**0.69**	**0.12**
C0235-021-4000-M	**0.235**	**5.97**	**0.021**	**0.53**	**4.000**	**101.60**	**1.321**	**33.56**	**0.891**	**22.63**	**1.99**	**8.85**	**0.74**	**0.13**	**C0235-021-4000-S**	**1.594**	**40.50**	**1.55**	**6.91**	**0.65**	**0.11**
C0235-021-4250-M	**0.235**	**5.97**	**0.021**	**0.53**	**4.250**	**107.95**	**1.402**	**35.61**	**0.944**	**23.99**	**1.99**	**8.85**	**0.70**	**0.12**	**C0235-021-4250-S**	**1.692**	**42.99**	**1.55**	**6.91**	**0.61**	**0.11**
C0235-022-0500-M	**0.235**	**5.97**	**0.022**	**0.56**	**0.500**	**12.70**	**0.199**	**5.05**	**0.153**	**3.89**	**2.27**	**10.09**	**7.53**	**1.32**	**C0235-022-0500-S**	**0.229**	**5.82**	**1.77**	**7.89**	**6.55**	**1.15**
C0235-022-0563-M	**0.235**	**5.97**	**0.022**	**0.56**	**0.563**	**14.29**	**0.220**	**5.59**	**0.168**	**4.26**	**2.27**	**10.09**	**6.62**	**1.16**	**C0235-022-0563-S**	**0.254**	**6.46**	**1.77**	**7.89**	**5.76**	**1.01**
C0235-022-0625-M	**0.235**	**5.97**	**0.022**	**0.56**	**0.625**	**15.88**	**0.241**	**6.13**	**0.182**	**4.63**	**2.27**	**10.09**	**5.91**	**1.03**	**C0235-022-0625-S**	**0.280**	**7.11**	**1.77**	**7.89**	**5.14**	**0.90**
C0235-022-0688-M	**0.235**	**5.97**	**0.022**	**0.56**	**0.688**	**17.46**	**0.263**	**6.67**	**0.197**	**5.00**	**2.27**	**10.09**	**5.34**	**0.93**	**C0235-022-0688-S**	**0.305**	**7.75**	**1.77**	**7.89**	**4.64**	**0.81**
C0235-022-0750-M	**0.235**	**5.97**	**0.022**	**0.56**	**0.750**	**19.05**	**0.284**	**7.21**	**0.212**	**5.38**	**2.27**	**10.09**	**4.86**	**0.85**	**C0235-022-0750-S**	**0.331**	**8.40**	**1.77**	**7.89**	**4.23**	**0.74**
C0235-022-0813-M	**0.235**	**5.97**	**0.022**	**0.56**	**0.813**	**20.64**	**0.305**	**7.75**	**0.226**	**5.75**	**2.27**	**10.09**	**4.47**	**0.78**	**C0235-022-0813-S**	**0.356**	**9.04**	**1.77**	**7.89**	**3.89**	**0.68**
C0235-022-0875-M	**0.235**	**5.97**	**0.022**	**0.56**	**0.875**	**22.23**	**0.326**	**8.29**	**0.241**	**6.12**	**2.27**	**10.09**	**4.13**	**0.72**	**C0235-022-0875-S**	**0.381**	**9.69**	**1.77**	**7.89**	**3.59**	**0.63**
C0235-022-0938-M	**0.235**	**5.97**	**0.022**	**0.56**	**0.938**	**23.81**	**0.348**	**8.83**	**0.256**	**6.49**	**2.27**	**10.09**	**3.84**	**0.67**	**C0235-022-0938-S**	**0.407**	**10.33**	**1.77**	**7.89**	**3.34**	**0.58**
C0235-022-1000-M	**0.235**	**5.97**	**0.022**	**0.56**	**1.000**	**25.40**	**0.369**	**9.37**	**0.270**	**6.87**	**2.27**	**10.09**	**3.59**	**0.63**	**C0235-022-1000-S**	**0.432**	**10.98**	**1.77**	**7.89**	**3.12**	**0.55**
C0235-022-1125-M	**0.235**	**5.97**	**0.022**	**0.56**	**1.125**	**28.58**	**0.411**	**10.45**	**0.300**	**7.61**	**2.27**	**10.09**	**3.18**	**0.56**	**C0235-022-1125-S**	**0.483**	**12.26**	**1.77**	**7.89**	**2.76**	**0.48**
C0235-022-1250-M	**0.235**	**5.97**	**0.022**	**0.56**	**1.250**	**31.75**	**0.454**	**11.53**	**0.329**	**8.35**	**2.27**	**10.09**	**2.85**	**0.50**	**C0235-022-1250-S**	**0.534**	**13.55**	**1.77**	**7.89**	**2.48**	**0.43**
C0235-022-1375-M	**0.235**	**5.97**	**0.022**	**0.56**	**1.375**	**34.93**	**0.496**	**12.60**	**0.358**	**9.10**	**2.27**	**10.09**	**2.58**	**0.45**	**C0235-022-1375-S**	**0.584**	**14.84**	**1.77**	**7.89**	**2.24**	**0.39**
C0235-022-1500-M	**0.235**	**5.97**	**0.022**	**0.56**	**1.500**	**38.10**	**0.539**	**13.68**	**0.387**	**9.84**	**2.27**	**10.09**	**2.36**	**0.41**	**C0235-022-1500-S**	**0.635**	**16.13**	**1.77**	**7.89**	**2.05**	**0.36**
C0235-022-1625-M	**0.235**	**5.97**	**0.022**	**0.56**	**1.625**	**41.28**	**0.581**	**14.76**	**0.417**	**10.59**	**2.27**	**10.09**	**2.17**	**0.38**	**C0235-022-1625-S**	**0.686**	**17.42**	**1.77**	**7.89**	**1.89**	**0.33**
C0235-022-1750-M	**0.235**	**5.97**	**0.022**	**0.56**	**1.750**	**44.45**	**0.624**	**15.84**	**0.446**	**11.33**	**2.27**	**10.09**	**2.01**	**0.35**	**C0235-022-1750-S**	**0.737**	**18.71**	**1.77**	**7.89**	**1.75**	**0.31**
C0235-022-1875-M	**0.235**	**5.97**	**0.022**	**0.56**	**1.875**	**47.63**	**0.666**	**16.92**	**0.475**	**12.08**	**2.27**	**10.09**	**1.88**	**0.33**	**C0235-022-1875-S**	**0.787**	**20.00**	**1.77**	**7.89**	**1.63**	**0.29**

Part Numbers with an "*" are squared and not ground. **Part Numbers in bold** represent the newly expanded Associated Spring RAYMOND compression spring offering.

MUSIC WIRE															STAINLESS STEEL						
Catalog #	Outside Diameter (OD)		Wire Diameter (d)		Free Length (L) Approx		Load Length (L_1)		Solid Height (Sh) Approx		Load (P) at L_1		Spring Rate (R)		Catalog #	Load Length (L_1)		Load (P) at L_1		Spring Rate (R)	
	in	mm	in	mm	in	mm	in	mm	in	mm	lb	N	lb/in	N/mm		in	mm	lb	N	lb/in	N/mm
C0235-022-2000-M	0.235	5.97	0.022	0.56	2.000	50.80	0.709	18.00	0.505	12.82	2.27	10.09	1.76	0.31	**C0235-022-2000-S**	0.838	21.29	1.77	7.89	1.53	0.27
C0235-022-2125-M	0.235	5.97	0.022	0.56	2.125	53.98	0.751	19.08	0.534	13.56	2.27	10.09	1.65	0.29	**C0235-022-2125-S**	0.889	22.58	1.77	7.89	1.44	0.25
C0235-022-2250-M	0.235	5.97	0.022	0.56	2.250	57.15	0.794	20.16	0.563	14.31	2.27	10.09	1.56	0.27	**C0235-022-2250-S**	0.940	23.86	1.77	7.89	1.35	0.24
C0235-022-2375-M	0.235	5.97	0.022	0.56	2.375	60.33	0.836	21.23	0.593	15.05	2.27	10.09	1.47	0.26	**C0235-022-2375-S**	0.990	25.15	1.77	7.89	1.28	0.22
C0235-022-2500-M	0.235	5.97	0.022	0.56	2.500	63.50	0.878	22.31	0.622	15.80	2.27	10.09	1.40	0.24	**C0235-022-2500-S**	1.041	26.44	1.77	7.89	1.22	0.21
C0235-022-2625-M	0.235	5.97	0.022	0.56	2.625	66.68	0.921	23.39	0.651	16.54	2.27	10.09	1.33	0.23	**C0235-022-2625-S**	1.092	27.73	1.77	7.89	1.16	0.20
C0235-022-2750-M	0.235	5.97	0.022	0.56	2.750	69.85	0.963	24.47	0.681	17.28	2.27	10.09	1.27	0.22	**C0235-022-2750-S**	1.143	29.02	1.77	7.89	1.10	0.19
C0235-022-2875-M	0.235	5.97	0.022	0.56	2.875	73.03	1.006	25.55	0.710	18.03	2.27	10.09	1.21	0.21	**C0235-022-2875-S**	1.193	30.31	1.77	7.89	1.06	0.18
C0235-022-3000-M	0.235	5.97	0.022	0.56	3.000	76.20	1.048	26.63	0.739	18.77	2.27	10.09	1.16	0.20	**C0235-022-3000-S**	1.244	31.60	1.77	7.89	1.01	0.18
C0235-022-3250-M	0.235	5.97	0.022	0.56	3.250	82.55	1.133	28.78	0.798	20.26	2.27	10.09	1.07	0.19	**C0235-022-3250-S**	1.346	34.18	1.77	7.89	0.93	0.16
C0235-022-3500-M	0.235	5.97	0.022	0.56	3.500	88.90	1.218	30.94	0.856	21.75	2.27	10.09	0.99	0.17	**C0235-022-3500-S**	1.447	36.75	1.77	7.89	0.86	0.15
C0235-022-3750-M	0.235	5.97	0.022	0.56	3.750	95.25	1.303	33.10	0.915	23.24	2.27	10.09	0.93	0.16	**C0235-022-3750-S**	1.549	39.33	1.77	7.89	0.81	0.14
C0235-022-4000-M	0.235	5.97	0.022	0.56	4.000	101.60	1.388	35.26	0.974	24.73	2.27	10.09	0.87	0.15	**C0235-022-4000-S**	1.650	41.91	1.77	7.89	0.76	0.13
C0235-022-4250-M	0.235	5.97	0.022	0.56	4.250	107.95	1.473	37.41	1.032	26.22	2.27	10.09	0.82	0.14	**C0235-022-4250-S**	1.751	44.49	1.77	7.89	0.71	0.12
C0235-023-0438-M	0.235	5.97	0.023	0.58	0.438	11.11	0.186	4.72	0.148	3.77	2.57	11.42	10.20	1.78	**C0235-023-0438-S**	0.211	5.35	2.01	8.95	8.87	1.55
C0235-023-0500-M	0.235	5.97	0.023	0.58	0.500	12.70	0.208	5.28	0.164	4.17	2.57	11.42	8.79	1.54	**C0235-023-0500-S**	0.237	6.01	2.01	8.95	7.65	1.34
C0235-023-0563-M	0.235	5.97	0.023	0.58	0.563	14.29	0.230	5.85	0.180	4.58	2.57	11.42	7.73	1.35	**C0235-023-0563-S**	0.263	6.68	2.01	8.95	6.72	1.18
C0235-023-0625-M	0.235	5.97	0.023	0.58	0.625	15.88	0.253	6.42	0.196	4.98	2.57	11.42	6.90	1.21	**C0235-023-0625-S**	0.289	7.35	2.01	8.95	6.00	1.05
C0235-023-0688-M	0.235	5.97	0.023	0.58	0.688	17.46	0.275	6.98	0.212	5.39	2.57	11.42	6.22	1.09	**C0235-023-0688-S**	0.316	8.02	2.01	8.95	5.41	0.95
C0235-023-0750-M	0.235	5.97	0.023	0.58	0.750	19.05	0.297	7.55	0.228	5.79	2.57	11.42	5.67	0.99	**C0235-023-0750-S**	0.342	8.68	2.01	8.95	4.93	0.86
C0235-023-0813-M	0.235	5.97	0.023	0.58	0.813	20.64	0.319	8.11	0.244	6.20	2.57	11.42	5.21	0.91	**C0235-023-0813-S**	0.368	9.35	2.01	8.95	4.53	0.79
C0235-023-0875-M	0.235	5.97	0.023	0.58	0.875	22.23	0.342	8.68	0.260	6.60	2.57	11.42	4.82	0.84	**C0235-023-0875-S**	0.394	10.02	2.01	8.95	4.19	0.73
C0235-023-0938-M	0.235	5.97	0.023	0.58	0.938	23.81	0.364	9.25	0.276	7.01	2.57	11.42	4.48	0.78	**C0235-023-0938-S**	0.421	10.68	2.01	8.95	3.89	0.68
C0235-023-1000-M	0.235	5.97	0.023	0.58	1.000	25.40	0.386	9.81	0.292	7.42	2.57	11.42	4.18	0.73	**C0235-023-1000-S**	0.447	11.35	2.01	8.95	3.64	0.64
C0235-023-1125-M	0.235	5.97	0.023	0.58	1.125	28.58	0.431	10.95	0.324	8.23	2.57	11.42	3.70	0.65	**C0235-023-1125-S**	0.499	12.69	2.01	8.95	3.22	0.56
C0235-023-1250-M	0.235	5.97	0.023	0.58	1.250	31.75	0.476	12.08	0.356	9.04	2.57	11.42	3.32	0.58	**C0235-023-1250-S**	0.552	14.02	2.01	8.95	2.88	0.50
C0235-023-1375-M	0.235	5.97	0.023	0.58	1.375	34.93	0.520	13.21	0.388	9.85	2.57	11.42	3.00	0.53	**C0235-023-1375-S**	0.605	15.35	2.01	8.95	2.61	0.46
C0235-023-1500-M	0.235	5.97	0.023	0.58	1.500	38.10	0.565	14.34	0.420	10.66	2.57	11.42	2.75	0.48	**C0235-023-1500-S**	0.657	16.69	2.01	8.95	2.39	0.42
C0235-023-1625-M	0.235	5.97	0.023	0.58	1.625	41.28	0.609	15.48	0.452	11.47	2.57	11.42	2.53	0.44	**C0235-023-1625-S**	0.710	18.02	2.01	8.95	2.20	0.38
C0235-023-1750-M	0.235	5.97	0.023	0.58	1.750	44.45	0.654	16.61	0.484	12.28	2.57	11.42	2.34	0.41	**C0235-023-1750-S**	0.762	19.36	2.01	8.95	2.04	0.36
C0235-023-1875-M	0.235	5.97	0.023	0.58	1.875	47.63	0.699	17.74	0.515	13.09	2.57	11.42	2.18	0.38	**C0235-023-1875-S**	0.815	20.69	2.01	8.95	1.90	0.33
C0235-023-2000-M	0.235	5.97	0.023	0.58	2.000	50.80	0.743	18.87	0.547	13.90	2.57	11.42	2.04	0.36	**C0235-023-2000-S**	0.867	22.03	2.01	8.95	1.78	0.31
C0235-023-2125-M	0.235	5.97	0.023	0.58	2.125	53.98	0.788	20.01	0.579	14.71	2.57	11.42	1.92	0.34	**C0235-023-2125-S**	0.920	23.36	2.01	8.95	1.67	0.29
C0235-023-2250-M	0.235	5.97	0.023	0.58	2.250	57.15	0.832	21.14	0.611	15.53	2.57	11.42	1.81	0.32	**C0235-023-2250-S**	0.972	24.69	2.01	8.95	1.58	0.28
C0235-023-2375-M	0.235	5.97	0.023	0.58	2.375	60.33	0.877	22.27	0.643	16.34	2.57	11.42	1.71	0.30	**C0235-023-2375-S**	1.025	26.03	2.01	8.95	1.49	0.26
C0235-023-2500-M	0.235	5.97	0.023	0.58	2.500	63.50	0.921	23.41	0.675	17.15	2.57	11.42	1.63	0.28	**C0235-023-2500-S**	1.077	27.36	2.01	8.95	1.42	0.25
C0235-023-2625-M	0.235	5.97	0.023	0.58	2.625	66.68	0.966	24.54	0.707	17.96	2.57	11.42	1.55	0.27	**C0235-023-2625-S**	1.130	28.70	2.01	8.95	1.35	0.24
C0235-023-2750-M	0.235	5.97	0.023	0.58	2.750	69.85	1.011	25.67	0.739	18.77	2.57	11.42	1.48	0.26	**C0235-023-2750-S**	1.182	30.03	2.01	8.95	1.28	0.22
C0235-023-2875-M	0.235	5.97	0.023	0.58	2.875	73.03	1.055	26.80	0.771	19.58	2.57	11.42	1.41	0.25	**C0235-023-2875-S**	1.235	31.37	2.01	8.95	1.23	0.21
C0235-023-3000-M	0.235	5.97	0.023	0.58	3.000	76.20	1.100	27.94	0.803	20.39	2.57	11.42	1.35	0.24	**C0235-023-3000-S**	1.287	32.70	2.01	8.95	1.18	0.21
C0235-023-3250-M	0.235	5.97	0.023	0.58	3.250	82.55	1.189	30.20	0.867	22.01	2.57	11.42	1.25	0.22	**C0235-023-3250-S**	1.392	35.37	2.01	8.95	1.08	0.19
C0235-023-3500-M	0.235	5.97	0.023	0.58	3.500	88.90	1.278	32.47	0.930	23.63	2.57	11.42	1.16	0.20	**C0235-023-3500-S**	1.498	38.04	2.01	8.95	1.01	0.18
C0235-023-3750-M	0.235	5.97	0.023	0.58	3.750	95.25	1.367	34.73	0.994	25.26	2.57	11.42	1.08	0.19	**C0235-023-3750-S**	1.603	40.71	2.01	8.95	0.94	0.16
C0235-023-4000-M	0.235	5.97	0.023	0.58	4.000	101.60	1.457	37.00	1.058	26.88	2.57	11.42	1.01	0.18	**C0235-023-4000-S**	1.708	43.38	2.01	8.95	0.88	0.15
C0235-024-0438-M	0.235	5.97	0.024	0.61	0.438	11.11	0.194	4.92	0.158	4.02	2.89	12.87	11.86	2.08	**C0235-024-0438-S**	0.217	5.52	2.27	10.10	10.32	1.81
C0235-024-0500-M	0.235	5.97	0.024	0.61	0.500	12.70	0.217	5.51	0.176	4.46	2.89	12.87	10.22	1.79	**C0235-024-0500-S**	0.245	6.21	2.27	10.10	8.89	1.56
C0235-024-0563-M	0.235	5.97	0.024	0.61	0.563	14.29	0.240	6.11	0.193	4.90	2.89	12.87	8.98	1.57	**C0235-024-0563-S**	0.272	6.90	2.27	10.10	7.81	1.37
C0235-024-0625-M	0.235	5.97	0.024	0.61	0.625	15.88	0.264	6.70	0.210	5.34	2.89	12.87	8.01	1.40	**C0235-024-0625-S**	0.299	7.59	2.27	10.10	6.96	1.22
C0235-024-0688-M	0.235	5.97	0.024	0.61	0.688	17.46	0.287	7.30	0.227	5.78	2.89	12.87	7.23	1.26	**C0235-024-0688-S**	0.326	8.28	2.27	10.10	6.28	1.10
C0235-024-0750-M	0.235	5.97	0.024	0.61	0.750	19.05	0.311	7.89	0.245	6.22	2.89	12.87	6.58	1.15	**C0235-024-0750-S**	0.353	8.98	2.27	10.10	5.72	1.00
C0235-024-0813-M	0.235	5.97	0.024	0.61	0.813	20.64	0.334	8.48	0.262	6.66	2.89	12.87	6.05	1.06	**C0235-024-0813-S**	0.381	9.67	2.27	10.10	5.26	0.92
C0235-024-0875-M	0.235	5.97	0.024	0.61	0.875	22.23	0.357	9.08	0.279	7.10	2.89	12.87	5.59	0.98	**C0235-024-0875-S**	0.408	10.36	2.27	10.10	4.86	0.85
C0235-024-0938-M	0.235	5.97	0.024	0.61	0.938	23.81	0.381	9.67	0.297	7.54	2.89	12.87	5.20	0.91	**C0235-024-0938-S**	0.435	11.05	2.27	10.10	4.52	0.79
C0235-024-1000-M	0.235	5.97	0.024	0.61	1.000	25.40	0.404	10.27	0.314	7.97	2.89	12.87	4.85	0.85	**C0235-024-1000-S**	0.462	11.74	2.27	10.10	4.22	0.74
C0235-024-1125-M	0.235	5.97	0.024	0.61	1.125	28.58	0.451	11.45	0.349	8.85	2.89	12.87	4.29	0.75	**C0235-024-1125-S**	0.516	13.12	2.27	10.10	3.73	0.65
C0235-024-1250-M	0.235	5.97	0.024	0.61	1.250	31.75	0.498	12.64	0.383	9.73	2.89	12.87	3.85	0.67	**C0235-024-1250-S**	0.571	14.50	2.27	10.10	3.34	0.59
C0235-024-1375-M	0.235	5.97	0.024	0.61	1.375	34.93	0.544	13.83	0.418	10.61	2.89	12.87	3.48	0.61	**C0235-024-1375-S**	0.625	15.88	2.27	10.10	3.03	0.53
C0235-024-1500-M	0.235	5.97	0.024	0.61	1.500	38.10	0.591	15.02	0.452	11.49	2.89	12.87	3.18	0.56	**C0235-024-1500-S**	0.680	17.26	2.27	10.10	2.77	0.48
C0235-024-1625-M	0.235	5.97	0.024	0.61	1.625	41.28	0.638	16.20	0.487	12.37	2.89	12.87	2.93	0.51	**C0235-024-1625-S**	0.734	18.64	2.27	10.10	2.55	0.45
C0235-024-1750-M	0.235	5.97	0.024	0.61	1.750	44.45	0.685	17.39	0.522	13.25	2.89	12.87	2.72	0.48	**C0235-024-1750-S**	0.788	20.02	2.27	10.10	2.36	0.41
C0235-024-1875-M	0.235	5.97	0.024	0.61	1.875	47.63	0.732	18.58	0.556	14.13	2.89	12.87	2.53	0.44	**C0235-024-1875-S**	0.843	21.41	2.27	10.10	2.20	0.38
C0235-024-2000-M	0.235	5.97	0.024	0.61	2.000	50.80	0.778	19.77	0.591	15.01	2.89	12.87	2.37	0.41	**C0235-024-2000-S**	0.897	22.79	2.27	10.10	2.06	0.36
C0235-024-2125-M	0.235	5.97	0.024	0.61	2.125	53.98	0.825	20.96	0.625	15.89	2.89	12.87	2.23	0.39	**C0235-024-2125-S**	0.951	24.17	2.27	10.10	1.94	0.34
C0235-024-2250-M	0.235	5.97	0.024	0.61	2.250	57.15	0.872	22.14	0.660	16.77	2.89	12.87	2.10	0.37	**C0235-024-2250-S**	1.006	25.55	2.27	10.10	1.83	0.32

FOR INFORMATION ON ALTERNATIVE FINISHES, SEE PAGE 311

Part Numbers with an "*" are squared and not ground. **Part Numbers in bold** represent the newly expanded Associated Spring RAYMOND compression spring offering.

(OD) 0.235 - 0.235

MUSIC WIRE															STAINLESS STEEL					
Catalog #	Outside Diameter (OD)		Wire Diameter (d)		Free Length (L) Approx		Load Length (L_1)		Solid Height (Sh) Approx		Load (P) at L_1		Spring Rate (R)		Catalog #	Load Length (L_1)		Load (P) at L_1		Spring Rate (R)	
	in	mm	in	mm	in	mm	in	mm	in	mm	lb	N	lb/in	N/mm		in	mm	lb	N	lb/in	N/mm
C0235-024-2375-M	**0.235**	**5.97**	**0.024**	**0.61**	**2.375**	**60.33**	**0.919**	**23.33**	**0.695**	**17.64**	**2.89**	**12.87**	**1.99**	**0.35**	**C0235-024-2375-S**	**1.060**	**26.93**	**2.27**	**10.10**	**1.73**	**0.30**
C0235-024-2500-M	**0.235**	**5.97**	**0.024**	**0.61**	**2.500**	**63.50**	**0.965**	**24.52**	**0.729**	**18.52**	**2.89**	**12.87**	**1.89**	**0.33**	**C0235-024-2500-S**	**1.115**	**28.31**	**2.27**	**10.10**	**1.64**	**0.29**
C0235-024-2625-M	**0.235**	**5.97**	**0.024**	**0.61**	**2.625**	**66.68**	**1.012**	**25.71**	**0.764**	**19.40**	**2.89**	**12.87**	**1.79**	**0.31**	**C0235-024-2625-S**	**1.169**	**29.69**	**2.27**	**10.10**	**1.56**	**0.27**
C0235-024-2750-M	**0.235**	**5.97**	**0.024**	**0.61**	**2.750**	**69.85**	**1.059**	**26.90**	**0.798**	**20.28**	**2.89**	**12.87**	**1.71**	**0.30**	**C0235-024-2750-S**	**1.223**	**31.07**	**2.27**	**10.10**	**1.49**	**0.26**
C0235-024-2875-M	**0.235**	**5.97**	**0.024**	**0.61**	**2.875**	**73.03**	**1.106**	**28.08**	**0.833**	**21.16**	**2.89**	**12.87**	**1.64**	**0.29**	**C0235-024-2875-S**	**1.278**	**32.45**	**2.27**	**10.10**	**1.42**	**0.25**
C0235-024-3000-M	**0.235**	**5.97**	**0.024**	**0.61**	**3.000**	**76.20**	**1.152**	**29.27**	**0.868**	**22.04**	**2.89**	**12.87**	**1.57**	**0.27**	**C0235-024-3000-S**	**1.332**	**33.84**	**2.27**	**10.10**	**1.36**	**0.24**
C0235-024-3250-M	**0.235**	**5.97**	**0.024**	**0.61**	**3.250**	**82.55**	**1.246**	**31.65**	**0.937**	**23.80**	**2.89**	**12.87**	**1.44**	**0.25**	**C0235-024-3250-S**	**1.441**	**36.60**	**2.27**	**10.10**	**1.26**	**0.22**
C0235-024-3500-M	**0.235**	**5.97**	**0.024**	**0.61**	**3.500**	**88.90**	**1.339**	**34.02**	**1.006**	**25.56**	**2.89**	**12.87**	**1.34**	**0.23**	**C0235-024-3500-S**	**1.550**	**39.36**	**2.27**	**10.10**	**1.16**	**0.20**
C0235-024-3750-M	**0.235**	**5.97**	**0.024**	**0.61**	**3.750**	**95.25**	**1.433**	**36.40**	**1.075**	**27.31**	**2.89**	**12.87**	**1.25**	**0.22**	**C0235-024-3750-S**	**1.658**	**42.12**	**2.27**	**10.10**	**1.09**	**0.19**
C0235-024-4000-M	**0.235**	**5.97**	**0.024**	**0.61**	**4.000**	**101.60**	**1.527**	**38.77**	**1.145**	**29.07**	**2.89**	**12.87**	**1.17**	**0.20**	**C0235-024-4000-S**	**1.767**	**44.88**	**2.27**	**10.10**	**1.02**	**0.18**
C0235-026-0438-M	**0.235**	**5.97**	**0.026**	**0.66**	**0.438**	**11.11**	**0.210**	**5.33**	**0.178**	**4.53**	**3.62**	**16.08**	**15.89**	**2.78**	**C0235-026-0438-S**	**0.231**	**5.88**	**2.85**	**12.66**	**13.82**	**2.42**
C0235-026-0500-M	**0.235**	**5.97**	**0.026**	**0.66**	**0.500**	**12.70**	**0.236**	**5.98**	**0.198**	**5.04**	**3.62**	**16.08**	**13.67**	**2.39**	**C0235-026-0500-S**	**0.261**	**6.62**	**2.85**	**12.66**	**11.89**	**2.08**
C0235-026-0563-M	**0.235**	**5.97**	**0.026**	**0.66**	**0.563**	**14.29**	**0.261**	**6.63**	**0.218**	**5.55**	**3.62**	**16.08**	**12.00**	**2.10**	**C0235-026-0563-S**	**0.290**	**7.36**	**2.85**	**12.66**	**10.43**	**1.83**
C0235-026-0625-M	**0.235**	**5.97**	**0.026**	**0.66**	**0.625**	**15.88**	**0.287**	**7.28**	**0.238**	**6.05**	**3.62**	**16.08**	**10.69**	**1.87**	**C0235-026-0625-S**	**0.319**	**8.10**	**2.85**	**12.66**	**9.29**	**1.63**
C0235-026-0688-M	**0.235**	**5.97**	**0.026**	**0.66**	**0.688**	**17.46**	**0.312**	**7.93**	**0.258**	**6.56**	**3.62**	**16.08**	**9.64**	**1.69**	**C0235-026-0688-S**	**0.348**	**8.84**	**2.85**	**12.66**	**8.38**	**1.47**
C0235-026-0750-M	**0.235**	**5.97**	**0.026**	**0.66**	**0.750**	**19.05**	**0.338**	**8.58**	**0.278**	**7.07**	**3.62**	**16.08**	**8.77**	**1.54**	**C0235-026-0750-S**	**0.377**	**9.57**	**2.85**	**12.66**	**7.63**	**1.34**
C0235-026-0813-M	**0.235**	**5.97**	**0.026**	**0.66**	**0.813**	**20.64**	**0.364**	**9.23**	**0.299**	**7.58**	**3.62**	**16.08**	**8.05**	**1.41**	**C0235-026-0813-S**	**0.406**	**10.31**	**2.85**	**12.66**	**7.00**	**1.23**
C0235-026-0875-M	**0.235**	**5.97**	**0.026**	**0.66**	**0.875**	**22.23**	**0.389**	**9.88**	**0.319**	**8.09**	**3.62**	**16.08**	**7.44**	**1.30**	**C0235-026-0875-S**	**0.435**	**11.05**	**2.85**	**12.66**	**6.47**	**1.13**
C0235-026-0938-M	**0.235**	**5.97**	**0.026**	**0.66**	**0.938**	**23.81**	**0.415**	**10.53**	**0.339**	**8.60**	**3.62**	**16.08**	**6.92**	**1.21**	**C0235-026-0938-S**	**0.464**	**11.79**	**2.85**	**12.66**	**6.01**	**1.05**
C0235-026-1000-M	**0.235**	**5.97**	**0.026**	**0.66**	**1.000**	**25.40**	**0.440**	**11.18**	**0.359**	**9.11**	**3.62**	**16.08**	**6.46**	**1.13**	**C0235-026-1000-S**	**0.493**	**12.53**	**2.85**	**12.66**	**5.62**	**0.98**
C0235-026-1125-M	**0.235**	**5.97**	**0.026**	**0.66**	**1.125**	**28.58**	**0.492**	**12.49**	**0.399**	**10.13**	**3.62**	**16.08**	**5.71**	**1.00**	**C0235-026-1125-S**	**0.552**	**14.01**	**2.85**	**12.66**	**4.96**	**0.87**
C0235-026-1250-M	**0.235**	**5.97**	**0.026**	**0.66**	**1.250**	**31.75**	**0.543**	**13.79**	**0.439**	**11.15**	**3.62**	**16.08**	**5.11**	**0.89**	**C0235-026-1250-S**	**0.610**	**15.49**	**2.85**	**12.66**	**4.45**	**0.78**
C0235-026-1375-M	**0.235**	**5.97**	**0.026**	**0.66**	**1.375**	**34.93**	**0.594**	**15.09**	**0.479**	**12.17**	**3.62**	**16.08**	**4.63**	**0.81**	**C0235-026-1375-S**	**0.668**	**16.97**	**2.85**	**12.66**	**4.03**	**0.70**
C0235-026-1500-M	**0.235**	**5.97**	**0.026**	**0.66**	**1.500**	**38.10**	**0.645**	**16.39**	**0.519**	**13.18**	**3.62**	**16.08**	**4.23**	**0.74**	**C0235-026-1500-S**	**0.726**	**18.44**	**2.85**	**12.66**	**3.68**	**0.64**
C0235-026-1625-M	**0.235**	**5.97**	**0.026**	**0.66**	**1.625**	**41.28**	**0.696**	**17.69**	**0.559**	**14.20**	**3.62**	**16.08**	**3.89**	**0.68**	**C0235-026-1625-S**	**0.784**	**19.92**	**2.85**	**12.66**	**3.39**	**0.59**
C0235-026-1750-M	**0.235**	**5.97**	**0.026**	**0.66**	**1.750**	**44.45**	**0.748**	**18.99**	**0.599**	**15.22**	**3.62**	**16.08**	**3.61**	**0.63**	**C0235-026-1750-S**	**0.843**	**21.40**	**2.85**	**12.66**	**3.14**	**0.55**
C0235-026-1875-M	**0.235**	**5.97**	**0.026**	**0.66**	**1.875**	**47.63**	**0.799**	**20.29**	**0.639**	**16.24**	**3.62**	**16.08**	**3.36**	**0.59**	**C0235-026-1875-S**	**0.901**	**22.88**	**2.85**	**12.66**	**2.92**	**0.51**
C0235-026-2000-M	**0.235**	**5.97**	**0.026**	**0.66**	**2.000**	**50.80**	**0.850**	**21.59**	**0.679**	**17.26**	**3.62**	**16.08**	**3.14**	**0.55**	**C0235-026-2000-S**	**0.959**	**24.36**	**2.85**	**12.66**	**2.73**	**0.48**
C0235-026-2125-M	**0.235**	**5.97**	**0.026**	**0.66**	**2.125**	**53.98**	**0.901**	**22.89**	**0.719**	**18.28**	**3.62**	**16.08**	**2.95**	**0.52**	**C0235-026-2125-S**	**1.017**	**25.83**	**2.85**	**12.66**	**2.57**	**0.45**
C0235-026-2250-M	**0.235**	**5.97**	**0.026**	**0.66**	**2.250**	**57.15**	**0.952**	**24.19**	**0.760**	**19.29**	**3.62**	**16.08**	**2.79**	**0.49**	**C0235-026-2250-S**	**1.075**	**27.31**	**2.85**	**12.66**	**2.42**	**0.42**
C0235-026-2375-M	**0.235**	**5.97**	**0.026**	**0.66**	**2.375**	**60.33**	**1.004**	**25.49**	**0.800**	**20.31**	**3.62**	**16.08**	**2.64**	**0.46**	**C0235-026-2375-S**	**1.133**	**28.79**	**2.85**	**12.66**	**2.29**	**0.40**
C0235-026-2500-M	**0.235**	**5.97**	**0.026**	**0.66**	**2.500**	**63.50**	**1.055**	**26.79**	**0.840**	**21.33**	**3.62**	**16.08**	**2.50**	**0.44**	**C0235-026-2500-S**	**1.192**	**30.27**	**2.85**	**12.66**	**2.18**	**0.38**
C0235-026-2625-M	**0.235**	**5.97**	**0.026**	**0.66**	**2.625**	**66.68**	**1.106**	**28.09**	**0.880**	**22.35**	**3.62**	**16.08**	**2.38**	**0.42**	**C0235-026-2625-S**	**1.250**	**31.75**	**2.85**	**12.66**	**2.07**	**0.36**
C0235-026-2750-M	**0.235**	**5.97**	**0.026**	**0.66**	**2.750**	**69.85**	**1.157**	**29.39**	**0.920**	**23.37**	**3.62**	**16.08**	**2.27**	**0.40**	**C0235-026-2750-S**	**1.308**	**33.23**	**2.85**	**12.66**	**1.97**	**0.35**
C0235-026-2875-M	**0.235**	**5.97**	**0.026**	**0.66**	**2.875**	**73.03**	**1.208**	**30.69**	**0.960**	**24.39**	**3.62**	**16.08**	**2.17**	**0.38**	**C0235-026-2875-S**	**1.366**	**34.70**	**2.85**	**12.66**	**1.89**	**0.33**
C0235-026-3000-M	**0.235**	**5.97**	**0.026**	**0.66**	**3.000**	**76.20**	**1.260**	**31.99**	**1.000**	**25.40**	**3.62**	**16.08**	**2.08**	**0.36**	**C0235-026-3000-S**	**1.424**	**36.18**	**2.85**	**12.66**	**1.81**	**0.32**
C0235-026-3250-M	**0.235**	**5.97**	**0.026**	**0.66**	**3.250**	**82.55**	**1.362**	**34.60**	**1.080**	**27.44**	**3.62**	**16.08**	**1.92**	**0.34**	**C0235-026-3250-S**	**1.541**	**39.14**	**2.85**	**12.66**	**1.67**	**0.29**
C0235-026-3500-M	**0.235**	**5.97**	**0.026**	**0.66**	**3.500**	**88.90**	**1.464**	**37.20**	**1.161**	**29.48**	**3.62**	**16.08**	**1.78**	**0.31**	**C0235-026-3500-S**	**1.657**	**42.09**	**2.85**	**12.66**	**1.55**	**0.27**
C0235-026-3750-M	**0.235**	**5.97**	**0.026**	**0.66**	**3.750**	**95.25**	**1.567**	**39.80**	**1.241**	**31.51**	**3.62**	**16.08**	**1.66**	**0.29**	**C0235-026-3750-S**	**1.774**	**45.05**	**2.85**	**12.66**	**1.44**	**0.25**
C0235-026-4000-M	**0.235**	**5.97**	**0.026**	**0.66**	**4.000**	**101.60**	**1.669**	**42.40**	**1.321**	**33.55**	**3.62**	**16.08**	**1.55**	**0.27**	**C0235-026-4000-S**	**1.890**	**48.01**	**2.85**	**12.66**	**1.35**	**0.24**
C0235-029-0375-M	**0.235**	**5.97**	**0.029**	**0.74**	**0.375**	**9.53**	**0.205**	**5.21**	**0.184**	**4.67**	**4.90**	**21.78**	**28.81**	**5.04**	**C0235-029-0375-S**	**0.221**	**5.60**	**3.87**	**17.20**	**25.05**	**4.38**
C0235-029-0438-M	**0.235**	**5.97**	**0.029**	**0.74**	**0.438**	**11.11**	**0.234**	**5.94**	**0.208**	**5.28**	**4.90**	**21.78**	**24.07**	**4.21**	**C0235-029-0438-S**	**0.253**	**6.42**	**3.87**	**17.20**	**20.93**	**3.66**
C0235-029-0500-M	**0.235**	**5.97**	**0.029**	**0.74**	**0.500**	**12.70**	**0.263**	**6.68**	**0.232**	**5.90**	**4.90**	**21.78**	**20.66**	**3.62**	**C0235-029-0500-S**	**0.285**	**7.23**	**3.87**	**17.20**	**17.97**	**3.14**
C0235-029-0563-M	**0.235**	**5.97**	**0.029**	**0.74**	**0.563**	**14.29**	**0.292**	**7.42**	**0.257**	**6.52**	**4.90**	**21.78**	**18.10**	**3.17**	**C0235-029-0563-S**	**0.317**	**8.05**	**3.87**	**17.20**	**15.74**	**2.75**
C0235-029-0625-M	**0.235**	**5.97**	**0.029**	**0.74**	**0.625**	**15.88**	**0.321**	**8.15**	**0.281**	**7.13**	**4.90**	**21.78**	**16.11**	**2.82**	**C0235-029-0625-S**	**0.349**	**8.86**	**3.87**	**17.20**	**14.01**	**2.45**
C0235-029-0688-M	**0.235**	**5.97**	**0.029**	**0.74**	**0.688**	**17.46**	**0.350**	**8.89**	**0.305**	**7.75**	**4.90**	**21.78**	**14.51**	**2.54**	**C0235-029-0688-S**	**0.381**	**9.68**	**3.87**	**17.20**	**12.62**	**2.21**
C0235-029-0750-M	**0.235**	**5.97**	**0.029**	**0.74**	**0.750**	**19.05**	**0.379**	**9.63**	**0.329**	**8.36**	**4.90**	**21.78**	**13.20**	**2.31**	**C0235-029-0750-S**	**0.413**	**10.49**	**3.87**	**17.20**	**11.48**	**2.01**
C0235-029-0813-M	**0.235**	**5.97**	**0.029**	**0.74**	**0.813**	**20.64**	**0.408**	**10.36**	**0.353**	**8.98**	**4.90**	**21.78**	**12.11**	**2.12**	**C0235-029-0813-S**	**0.445**	**11.30**	**3.87**	**17.20**	**10.53**	**1.84**
C0235-029-0875-M	**0.235**	**5.97**	**0.029**	**0.74**	**0.875**	**22.23**	**0.437**	**11.10**	**0.378**	**9.59**	**4.90**	**21.78**	**11.18**	**1.96**	**C0235-029-0875-S**	**0.477**	**12.12**	**3.87**	**17.20**	**9.72**	**1.70**
C0235-029-0938-M	**0.235**	**5.97**	**0.029**	**0.74**	**0.938**	**23.81**	**0.466**	**11.84**	**0.402**	**10.21**	**4.90**	**21.78**	**10.39**	**1.82**	**C0235-029-0938-S**	**0.509**	**12.93**	**3.87**	**17.20**	**9.03**	**1.58**
C0235-029-1000-M	**0.235**	**5.97**	**0.029**	**0.74**	**1.000**	**25.40**	**0.495**	**12.57**	**0.426**	**10.82**	**4.90**	**21.78**	**9.70**	**1.70**	**C0235-029-1000-S**	**0.541**	**13.75**	**3.87**	**17.20**	**8.43**	**1.48**
C0235-029-1125-M	**0.235**	**5.97**	**0.029**	**0.74**	**1.125**	**28.58**	**0.553**	**14.05**	**0.475**	**12.06**	**4.90**	**21.78**	**8.56**	**1.50**	**C0235-029-1125-S**	**0.605**	**15.38**	**3.87**	**17.20**	**7.44**	**1.30**
C0235-029-1250-M	**0.235**	**5.97**	**0.029**	**0.74**	**1.250**	**31.75**	**0.611**	**15.52**	**0.523**	**13.29**	**4.90**	**21.78**	**7.66**	**1.34**	**C0235-029-1250-S**	**0.670**	**17.01**	**3.87**	**17.20**	**6.66**	**1.17**
C0235-029-1375-M	**0.235**	**5.97**	**0.029**	**0.74**	**1.375**	**34.93**	**0.669**	**16.99**	**0.572**	**14.52**	**4.90**	**21.78**	**6.94**	**1.21**	**C0235-029-1375-S**	**0.734**	**18.63**	**3.87**	**17.20**	**6.03**	**1.06**
C0235-029-1500-M	**0.235**	**5.97**	**0.029**	**0.74**	**1.500**	**38.10**	**0.727**	**18.46**	**0.620**	**15.75**	**4.90**	**21.78**	**6.33**	**1.11**	**C0235-029-1500-S**	**0.798**	**20.26**	**3.87**	**17.20**	**5.51**	**0.96**
C0235-029-1625-M	**0.235**	**5.97**	**0.029**	**0.74**	**1.625**	**41.28**	**0.785**	**19.94**	**0.669**	**16.98**	**4.90**	**21.78**	**5.83**	**1.02**	**C0235-029-1625-S**	**0.862**	**21.89**	**3.87**	**17.20**	**5.07**	**0.89**
C0235-029-1750-M	**0.235**	**5.97**	**0.029**	**0.74**	**1.750**	**44.45**	**0.843**	**21.41**	**0.717**	**18.21**	**4.90**	**21.78**	**5.40**	**0.94**	**C0235-029-1750-S**	**0.926**	**23.52**	**3.87**	**17.20**	**4.69**	**0.82**
C0235-029-1875-M	**0.235**	**5.97**	**0.029**	**0.74**	**1.875**	**47.63**	**0.901**	**22.88**	**0.765**	**19.44**	**4.90**	**21.78**	**5.03**	**0.88**	**C0235-029-1875-S**	**0.990**	**25.15**	**3.87**	**17.20**	**4.37**	**0.76**
C0235-029-2000-M	**0.235**	**5.97**	**0.029**	**0.74**	**2.000**	**50.80**	**0.959**	**24.36**	**0.814**	**20.67**	**4.90**	**21.78**	**4.70**	**0.82**	**C0235-029-2000-S**	**1.054**	**26.78**	**3.87**	**17.20**	**4.09**	**0.72**
C0235-029-2125-M	**0.235**	**5.97**	**0.029**	**0.74**	**2.125**	**53.98**	**1.017**	**25.83**	**0.862**	**21.90**	**4.90**	**21.78**	**4.42**	**0.77**	**C0235-029-2125-S**	**1.118**	**28.41**	**3.87**	**17.20**	**3.84**	**0.67**
C0235-029-2250-M	**0.235**	**5.97**	**0.029**	**0.74**	**2.250**	**57.15**	**1.075**	**27.30**	**0.911**	**23.14**	**4.90**	**21.78**	**4.17**	**0.73**	**C0235-029-2250-S**	**1.183**	**30.04**	**3.87**	**17.20**	**3.62**	**0.63**
C0235-029-2375-M	**0.235**	**5.97**	**0.029**	**0.74**	**2.375**	**60.33**	**1.133**	**28.77**	**0.959**	**24.37**	**4.90**	**21.78**	**3.94**	**0.69**	**C0235-029-2375-S**	**1.247**	**31.66**	**3.87**	**17.20**	**3.43**	**0.60**
C0235-029-2500-M	**0.235**	**5.97**	**0.029**	**0.74**	**2.500**	**63.50**	**1.191**	**30.25**	**1.008**	**25.60**	**4.90**	**21.78**	**3.74**	**0.65**	**C0235-029-2500-S**	**1.311**	**33.29**	**3.87**	**17.20**	**3.25**	**0.57**
C0235-029-2625-M	**0.235**	**5.97**	**0.029**	**0.74**	**2.625**	**66.68**	**1.249**	**31.72**	**1.056**	**26.83**	**4.90**	**21.78**	**3.56**	**0.62**	**C0235-029-2625-S**	**1.375**	**34.92**	**3.87**	**17.20**	**3.09**	**0.54**

Part Numbers with an "*" are squared and not ground. **Part Numbers in bold** represent the newly expanded Associated Spring RAYMOND compression spring offering.

MUSIC WIRE															STAINLESS STEEL						
Catalog #	Outside Diameter (OD)		Wire Diameter (d)		Free Length (L) Approx		Load Length (L_1)		Solid Height (Sh) Approx		Load (P) at L_1		Spring Rate (R)		Catalog #	Load Length (L_1)		Load (P) at L_1		Spring Rate (R)	
	in	mm	in	mm	in	mm	in	mm	in	mm	lb	N	lb/in	N/mm		in	mm	lb	N	lb/in	N/mm
C0235-029-2750-M	**0.235**	**5.97**	**0.029**	**0.74**	**2.750**	**69.85**	**1.307**	**33.19**	**1.105**	**28.06**	**4.90**	**21.78**	**3.39**	**0.59**	**C0235-029-2750-S**	**1.439**	**36.55**	**3.87**	**17.20**	**2.95**	**0.52**
C0235-029-2875-M	**0.235**	**5.97**	**0.029**	**0.74**	**2.875**	**73.03**	**1.365**	**34.67**	**1.153**	**29.29**	**4.90**	**21.78**	**3.24**	**0.57**	**C0235-029-2875-S**	**1.503**	**38.18**	**3.87**	**17.20**	**2.82**	**0.49**
C0235-029-3000-M	**0.235**	**5.97**	**0.029**	**0.74**	**3.000**	**76.20**	**1.423**	**36.14**	**1.202**	**30.52**	**4.90**	**21.78**	**3.10**	**0.54**	**C0235-029-3000-S**	**1.567**	**39.81**	**3.87**	**17.20**	**2.70**	**0.47**
C0235-029-3250-M	**0.235**	**5.97**	**0.029**	**0.74**	**3.250**	**82.55**	**1.539**	**39.08**	**1.299**	**32.98**	**4.90**	**21.78**	**2.86**	**0.50**	**C0235-029-3250-S**	**1.696**	**43.07**	**3.87**	**17.20**	**2.49**	**0.44**
C0235-029-3500-M	**0.235**	**5.97**	**0.029**	**0.74**	**3.500**	**88.90**	**1.655**	**42.03**	**1.396**	**35.45**	**4.90**	**21.78**	**2.65**	**0.46**	**C0235-029-3500-S**	**1.824**	**46.32**	**3.87**	**17.20**	**2.31**	**0.40**
C0235-029-3750-M	**0.235**	**5.97**	**0.029**	**0.74**	**3.750**	**95.25**	**1.771**	**44.98**	**1.492**	**37.91**	**4.90**	**21.78**	**2.47**	**0.43**	**C0235-029-3750-S**	**1.952**	**49.58**	**3.87**	**17.20**	**2.15**	**0.38**
C0235-029-4000-M	**0.235**	**5.97**	**0.029**	**0.74**	**4.000**	**101.60**	**1.887**	**47.92**	**1.589**	**40.37**	**4.90**	**21.78**	**2.32**	**0.41**	**C0235-029-4000-S**	**2.080**	**52.84**	**3.87**	**17.20**	**2.02**	**0.35**
C0235-030-0375-M	**0.235**	**5.97**	**0.030**	**0.76**	**0.375**	**9.53**	**0.212**	**5.38**	**0.192**	**4.88**	**5.38**	**23.92**	**32.96**	**5.77**	**C0235-030-0375-S**	**0.227**	**5.76**	**4.25**	**18.91**	**28.66**	**5.02**
C0235-030-0438-M	**0.235**	**5.97**	**0.030**	**0.76**	**0.438**	**11.11**	**0.242**	**6.15**	**0.218**	**5.53**	**5.38**	**23.92**	**27.50**	**4.81**	**C0235-030-0438-S**	**0.260**	**6.60**	**4.25**	**18.91**	**23.91**	**4.18**
C0235-030-0500-M	**0.235**	**5.97**	**0.030**	**0.76**	**0.500**	**12.70**	**0.272**	**6.91**	**0.243**	**6.18**	**5.38**	**23.92**	**23.60**	**4.13**	**C0235-030-0500-S**	**0.293**	**7.44**	**4.25**	**18.91**	**20.52**	**3.59**
C0235-030-0563-M	**0.235**	**5.97**	**0.030**	**0.76**	**0.563**	**14.29**	**0.302**	**7.68**	**0.269**	**6.83**	**5.38**	**23.92**	**20.66**	**3.62**	**C0235-030-0563-S**	**0.326**	**8.28**	**4.25**	**18.91**	**17.97**	**3.14**
C0235-030-0625-M	**0.235**	**5.97**	**0.030**	**0.76**	**0.625**	**15.88**	**0.332**	**8.44**	**0.295**	**7.49**	**5.38**	**23.92**	**18.38**	**3.22**	**C0235-030-0625-S**	**0.359**	**9.12**	**4.25**	**18.91**	**15.98**	**2.80**
C0235-030-0688-M	**0.235**	**5.97**	**0.030**	**0.76**	**0.688**	**17.46**	**0.362**	**9.21**	**0.320**	**8.14**	**5.38**	**23.92**	**16.54**	**2.90**	**C0235-030-0688-S**	**0.392**	**9.96**	**4.25**	**18.91**	**14.39**	**2.52**
C0235-030-0750-M	**0.235**	**5.97**	**0.030**	**0.76**	**0.750**	**19.05**	**0.393**	**9.97**	**0.346**	**8.79**	**5.38**	**23.92**	**15.05**	**2.63**	**C0235-030-0750-S**	**0.425**	**10.80**	**4.25**	**18.91**	**13.08**	**2.29**
C0235-030-0813-M	**0.235**	**5.97**	**0.030**	**0.76**	**0.813**	**20.64**	**0.423**	**10.74**	**0.372**	**9.44**	**5.38**	**23.92**	**13.80**	**2.41**	**C0235-030-0813-S**	**0.458**	**11.63**	**4.25**	**18.91**	**12.00**	**2.10**
C0235-030-0875-M	**0.235**	**5.97**	**0.030**	**0.76**	**0.875**	**22.23**	**0.453**	**11.50**	**0.397**	**10.09**	**5.38**	**23.92**	**12.74**	**2.23**	**C0235-030-0875-S**	**0.491**	**12.47**	**4.25**	**18.91**	**11.08**	**1.94**
C0235-030-0938-M	**0.235**	**5.97**	**0.030**	**0.76**	**0.938**	**23.81**	**0.483**	**12.27**	**0.423**	**10.74**	**5.38**	**23.92**	**11.83**	**2.07**	**C0235-030-0938-S**	**0.524**	**13.31**	**4.25**	**18.91**	**10.29**	**1.80**
C0235-030-1000-M	**0.235**	**5.97**	**0.030**	**0.76**	**1.000**	**25.40**	**0.513**	**13.03**	**0.448**	**11.39**	**5.38**	**23.92**	**11.04**	**1.93**	**C0235-030-1000-S**	**0.557**	**14.15**	**4.25**	**18.91**	**9.60**	**1.68**
C0235-030-1125-M	**0.235**	**5.97**	**0.030**	**0.76**	**1.125**	**28.58**	**0.573**	**14.56**	**0.500**	**12.69**	**5.38**	**23.92**	**9.75**	**1.71**	**C0235-030-1125-S**	**0.623**	**15.83**	**4.25**	**18.91**	**8.48**	**1.48**
C0235-030-1250-M	**0.235**	**5.97**	**0.030**	**0.76**	**1.250**	**31.75**	**0.634**	**16.09**	**0.551**	**14.00**	**5.38**	**23.92**	**8.72**	**1.53**	**C0235-030-1250-S**	**0.689**	**17.51**	**4.25**	**18.91**	**7.59**	**1.33**
C0235-030-1375-M	**0.235**	**5.97**	**0.030**	**0.76**	**1.375**	**34.93**	**0.694**	**17.62**	**0.602**	**15.30**	**5.38**	**23.92**	**7.90**	**1.38**	**C0235-030-1375-S**	**0.756**	**19.19**	**4.25**	**18.91**	**6.87**	**1.20**
C0235-030-1500-M	**0.235**	**5.97**	**0.030**	**0.76**	**1.500**	**38.10**	**0.754**	**19.15**	**0.654**	**16.60**	**5.38**	**23.92**	**7.21**	**1.26**	**C0235-030-1500-S**	**0.822**	**20.87**	**4.25**	**18.91**	**6.27**	**1.10**
C0235-030-1625-M	**0.235**	**5.97**	**0.030**	**0.76**	**1.625**	**41.28**	**0.814**	**20.68**	**0.705**	**17.90**	**5.38**	**23.92**	**6.63**	**1.16**	**C0235-030-1625-S**	**0.888**	**22.55**	**4.25**	**18.91**	**5.77**	**1.01**
C0235-030-1750-M	**0.235**	**5.97**	**0.030**	**0.76**	**1.750**	**44.45**	**0.875**	**22.21**	**0.756**	**19.20**	**5.38**	**23.92**	**6.14**	**1.08**	**C0235-030-1750-S**	**0.954**	**24.23**	**4.25**	**18.91**	**5.34**	**0.93**
C0235-030-1875-M	**0.235**	**5.97**	**0.030**	**0.76**	**1.875**	**47.63**	**0.935**	**23.74**	**0.807**	**20.51**	**5.38**	**23.92**	**5.72**	**1.00**	**C0235-030-1875-S**	**1.020**	**25.91**	**4.25**	**18.91**	**4.97**	**0.87**
C0235-030-2000-M	**0.235**	**5.97**	**0.030**	**0.76**	**2.000**	**50.80**	**0.995**	**25.27**	**0.859**	**21.81**	**5.38**	**23.92**	**5.35**	**0.94**	**C0235-030-2000-S**	**1.086**	**27.59**	**4.25**	**18.91**	**4.65**	**0.81**
C0235-030-2125-M	**0.235**	**5.97**	**0.030**	**0.76**	**2.125**	**53.98**	**1.055**	**26.80**	**0.910**	**23.11**	**5.38**	**23.92**	**5.03**	**0.88**	**C0235-030-2125-S**	**1.152**	**29.27**	**4.25**	**18.91**	**4.37**	**0.77**
C0235-030-2250-M	**0.235**	**5.97**	**0.030**	**0.76**	**2.250**	**57.15**	**1.116**	**28.33**	**0.961**	**24.41**	**5.38**	**23.92**	**4.74**	**0.83**	**C0235-030-2250-S**	**1.218**	**30.95**	**4.25**	**18.91**	**4.12**	**0.72**
C0235-030-2375-M	**0.235**	**5.97**	**0.030**	**0.76**	**2.375**	**60.33**	**1.176**	**29.86**	**1.012**	**25.71**	**5.38**	**23.92**	**4.49**	**0.78**	**C0235-030-2375-S**	**1.285**	**32.63**	**4.25**	**18.91**	**3.90**	**0.68**
C0235-030-2500-M	**0.235**	**5.97**	**0.030**	**0.76**	**2.500**	**63.50**	**1.236**	**31.39**	**1.064**	**27.02**	**5.38**	**23.92**	**4.26**	**0.74**	**C0235-030-2500-S**	**1.351**	**34.31**	**4.25**	**18.91**	**3.70**	**0.65**
C0235-030-2625-M	**0.235**	**5.97**	**0.030**	**0.76**	**2.625**	**66.68**	**1.296**	**32.93**	**1.115**	**28.32**	**5.38**	**23.92**	**4.05**	**0.71**	**C0235-030-2625-S**	**1.417**	**35.99**	**4.25**	**18.91**	**3.52**	**0.62**
C0235-030-2750-M	**0.235**	**5.97**	**0.030**	**0.76**	**2.750**	**69.85**	**1.357**	**34.46**	**1.166**	**29.62**	**5.38**	**23.92**	**3.86**	**0.68**	**C0235-030-2750-S**	**1.483**	**37.67**	**4.25**	**18.91**	**3.36**	**0.59**
C0235-030-2875-M	**0.235**	**5.97**	**0.030**	**0.76**	**2.875**	**73.03**	**1.417**	**35.99**	**1.217**	**30.92**	**5.38**	**23.92**	**3.69**	**0.65**	**C0235-030-2875-S**	**1.549**	**39.35**	**4.25**	**18.91**	**3.21**	**0.56**
C0235-030-3000-M	**0.235**	**5.97**	**0.030**	**0.76**	**3.000**	**76.20**	**1.477**	**37.52**	**1.269**	**32.22**	**5.38**	**23.92**	**3.53**	**0.62**	**C0235-030-3000-S**	**1.615**	**41.03**	**4.25**	**18.91**	**3.07**	**0.54**
C0235-030-3250-M	**0.235**	**5.97**	**0.030**	**0.76**	**3.250**	**82.55**	**1.598**	**40.58**	**1.371**	**34.83**	**5.38**	**23.92**	**3.25**	**0.57**	**C0235-030-3250-S**	**1.747**	**44.39**	**4.25**	**18.91**	**2.83**	**0.50**
C0235-030-3500-M	**0.235**	**5.97**	**0.030**	**0.76**	**3.500**	**88.90**	**1.718**	**43.64**	**1.474**	**37.43**	**5.38**	**23.92**	**3.02**	**0.53**	**C0235-030-3500-S**	**1.880**	**47.74**	**4.25**	**18.91**	**2.62**	**0.46**
C0235-030-3750-M	**0.235**	**5.97**	**0.030**	**0.76**	**3.750**	**95.25**	**1.838**	**46.70**	**1.576**	**40.04**	**5.38**	**23.92**	**2.81**	**0.49**	**C0235-030-3750-S**	**2.012**	**51.10**	**4.25**	**18.91**	**2.45**	**0.43**
C0235-030-4000-M	**0.235**	**5.97**	**0.030**	**0.76**	**4.000**	**101.60**	**1.959**	**49.76**	**1.679**	**42.64**	**5.38**	**23.92**	**2.64**	**0.46**	**C0235-030-4000-S**	**2.144**	**54.46**	**4.25**	**18.91**	**2.29**	**0.40**
C0235-032-0375-M	**0.235**	**5.97**	**0.032**	**0.81**	**0.375**	**9.53**	**0.225**	**5.72**	**0.208**	**5.30**	**6.43**	**28.58**	**42.85**	**7.50**	**C0235-032-0375-S**	**0.238**	**6.06**	**5.09**	**22.64**	**37.26**	**6.52**
C0235-032-0438-M	**0.235**	**5.97**	**0.032**	**0.81**	**0.438**	**11.11**	**0.257**	**6.54**	**0.237**	**6.02**	**6.43**	**28.58**	**35.68**	**6.24**	**C0235-032-0438-S**	**0.273**	**6.95**	**5.09**	**22.64**	**31.03**	**5.43**
C0235-032-0500-M	**0.235**	**5.97**	**0.032**	**0.81**	**0.500**	**12.70**	**0.290**	**7.36**	**0.265**	**6.74**	**6.43**	**28.58**	**30.56**	**5.35**	**C0235-032-0500-S**	**0.309**	**7.84**	**5.09**	**22.64**	**26.58**	**4.65**
C0235-032-0563-M	**0.235**	**5.97**	**0.032**	**0.81**	**0.563**	**14.29**	**0.322**	**8.18**	**0.294**	**7.46**	**6.43**	**28.58**	**26.73**	**4.68**	**C0235-032-0563-S**	**0.344**	**8.73**	**5.09**	**22.64**	**23.25**	**4.07**
C0235-032-0625-M	**0.235**	**5.97**	**0.032**	**0.81**	**0.625**	**15.88**	**0.354**	**9.00**	**0.322**	**8.18**	**6.43**	**28.58**	**23.75**	**4.16**	**C0235-032-0625-S**	**0.379**	**9.62**	**5.09**	**22.64**	**20.66**	**3.61**
C0235-032-0688-M	**0.235**	**5.97**	**0.032**	**0.81**	**0.688**	**17.46**	**0.387**	**9.83**	**0.350**	**8.90**	**6.43**	**28.58**	**21.37**	**3.74**	**C0235-032-0688-S**	**0.414**	**10.51**	**5.09**	**22.64**	**18.59**	**3.25**
C0235-032-0750-M	**0.235**	**5.97**	**0.032**	**0.81**	**0.750**	**19.05**	**0.419**	**10.65**	**0.379**	**9.62**	**6.43**	**28.58**	**19.43**	**3.40**	**C0235-032-0750-S**	**0.449**	**11.40**	**5.09**	**22.64**	**16.89**	**2.96**
C0235-032-0813-M	**0.235**	**5.97**	**0.032**	**0.81**	**0.813**	**20.64**	**0.452**	**11.47**	**0.407**	**10.34**	**6.43**	**28.58**	**17.80**	**3.12**	**C0235-032-0813-S**	**0.484**	**12.29**	**5.09**	**22.64**	**15.48**	**2.71**
C0235-032-0875-M	**0.235**	**5.97**	**0.032**	**0.81**	**0.875**	**22.23**	**0.484**	**12.29**	**0.436**	**11.07**	**6.43**	**28.58**	**16.43**	**2.88**	**C0235-032-0875-S**	**0.519**	**13.18**	**5.09**	**22.64**	**14.29**	**2.50**
C0235-032-0938-M	**0.235**	**5.97**	**0.032**	**0.81**	**0.938**	**23.81**	**0.516**	**13.11**	**0.464**	**11.79**	**6.43**	**28.58**	**15.26**	**2.67**	**C0235-032-0938-S**	**0.554**	**14.07**	**5.09**	**22.64**	**13.27**	**2.32**
C0235-032-1000-M	**0.235**	**5.97**	**0.032**	**0.81**	**1.000**	**25.40**	**0.549**	**13.94**	**0.492**	**12.51**	**6.43**	**28.58**	**14.24**	**2.49**	**C0235-032-1000-S**	**0.589**	**14.96**	**5.09**	**22.64**	**12.38**	**2.17**
C0235-032-1125-M	**0.235**	**5.97**	**0.032**	**0.81**	**1.125**	**28.58**	**0.613**	**15.58**	**0.549**	**13.95**	**6.43**	**28.58**	**12.56**	**2.20**	**C0235-032-1125-S**	**0.659**	**16.74**	**5.09**	**22.64**	**10.92**	**1.91**
C0235-032-1250-M	**0.235**	**5.97**	**0.032**	**0.81**	**1.250**	**31.75**	**0.678**	**17.22**	**0.606**	**15.39**	**6.43**	**28.58**	**11.24**	**1.97**	**C0235-032-1250-S**	**0.729**	**18.52**	**5.09**	**22.64**	**9.77**	**1.71**
C0235-032-1375-M	**0.235**	**5.97**	**0.032**	**0.81**	**1.375**	**34.93**	**0.743**	**18.87**	**0.663**	**16.84**	**6.43**	**28.58**	**10.17**	**1.78**	**C0235-032-1375-S**	**0.799**	**20.30**	**5.09**	**22.64**	**8.84**	**1.55**
C0235-032-1500-M	**0.235**	**5.97**	**0.032**	**0.81**	**1.500**	**38.10**	**0.808**	**20.51**	**0.720**	**18.28**	**6.43**	**28.58**	**9.28**	**1.62**	**C0235-032-1500-S**	**0.869**	**22.08**	**5.09**	**22.64**	**8.07**	**1.41**
C0235-032-1625-M	**0.235**	**5.97**	**0.032**	**0.81**	**1.625**	**41.28**	**0.872**	**22.16**	**0.776**	**19.72**	**6.43**	**28.58**	**8.54**	**1.49**	**C0235-032-1625-S**	**0.939**	**23.86**	**5.09**	**22.64**	**7.42**	**1.30**
C0235-032-1750-M	**0.235**	**5.97**	**0.032**	**0.81**	**1.750**	**44.45**	**0.937**	**23.80**	**0.833**	**21.16**	**6.43**	**28.58**	**7.90**	**1.38**	**C0235-032-1750-S**	**1.010**	**25.64**	**5.09**	**22.64**	**6.87**	**1.20**
C0235-032-1875-M	**0.235**	**5.97**	**0.032**	**0.81**	**1.875**	**47.63**	**1.002**	**25.44**	**0.890**	**22.61**	**6.43**	**28.58**	**7.36**	**1.29**	**C0235-032-1875-S**	**1.080**	**27.42**	**5.09**	**22.64**	**6.40**	**1.12**
C0235-032-2000-M	**0.235**	**5.97**	**0.032**	**0.81**	**2.000**	**50.80**	**1.066**	**27.09**	**0.947**	**24.05**	**6.43**	**28.58**	**6.88**	**1.20**	**C0235-032-2000-S**	**1.150**	**29.20**	**5.09**	**22.64**	**5.99**	**1.05**
C0235-032-2125-M	**0.235**	**5.97**	**0.032**	**0.81**	**2.125**	**53.98**	**1.131**	**28.73**	**1.004**	**25.49**	**6.43**	**28.58**	**6.47**	**1.13**	**C0235-032-2125-S**	**1.220**	**30.98**	**5.09**	**22.64**	**5.62**	**0.98**
C0235-032-2250-M	**0.235**	**5.97**	**0.032**	**0.81**	**2.250**	**57.15**	**1.196**	**30.37**	**1.060**	**26.93**	**6.43**	**28.58**	**6.10**	**1.07**	**C0235-032-2250-S**	**1.290**	**32.76**	**5.09**	**22.64**	**5.30**	**0.93**
C0235-032-2375-M	**0.235**	**5.97**	**0.032**	**0.81**	**2.375**	**60.33**	**1.261**	**32.02**	**1.117**	**28.37**	**6.43**	**28.58**	**5.77**	**1.01**	**C0235-032-2375-S**	**1.360**	**34.55**	**5.09**	**22.64**	**5.01**	**0.88**
C0235-032-2500-M	**0.235**	**5.97**	**0.032**	**0.81**	**2.500**	**63.50**	**1.325**	**33.66**	**1.174**	**29.82**	**6.43**	**28.58**	**5.47**	**0.96**	**C0235-032-2500-S**	**1.430**	**36.33**	**5.09**	**22.64**	**4.76**	**0.83**
C0235-032-2625-M	**0.235**	**5.97**	**0.032**	**0.81**	**2.625**	**66.68**	**1.390**	**35.31**	**1.231**	**31.26**	**6.43**	**28.58**	**5.20**	**0.91**	**C0235-032-2625-S**	**1.500**	**38.11**	**5.09**	**22.64**	**4.53**	**0.79**
C0235-032-2750-M	**0.235**	**5.97**	**0.032**	**0.81**	**2.750**	**69.85**	**1.455**	**36.95**	**1.287**	**32.70**	**6.43**	**28.58**	**4.96**	**0.87**	**C0235-032-2750-S**	**1.570**	**39.89**	**5.09**	**22.64**	**4.31**	**0.75**
C0235-032-2875-M	**0.235**	**5.97**	**0.032**	**0.81**	**2.875**	**73.03**	**1.519**	**38.59**	**1.344**	**34.14**	**6.43**	**28.58**	**4.74**	**0.83**	**C0235-032-2875-S**	**1.640**	**41.67**	**5.09**	**22.64**	**4.12**	**0.72**

FOR INFORMATION ON ALTERNATIVE FINISHES, SEE PAGE 311

Part Numbers with an "*" are squared and not ground. **Part Numbers in bold** represent the newly expanded Associated Spring RAYMOND compression spring offering.

(OD) 0.235 - 0.235

MUSIC WIRE															STAINLESS STEEL					
Catalog #	Outside Diameter (OD)		Wire Diameter (d)		Free Length (L) Approx		Load Length (L_1)		Solid Height (Sh) Approx		Load (P) at L_1		Spring Rate (R)		Catalog #	Load Length (L_1)		Load (P) at L_1		Spring Rate (R)	
	in	mm	in	mm	in	mm	in	mm	in	mm	lb	N	lb/in	N/mm		in	mm	lb	N	lb/in	N/mm
C0235-032-3000-M	**0.235**	**5.97**	**0.032**	**0.81**	**3.000**	**76.20**	**1.584**	**40.24**	**1.401**	**35.59**	**6.43**	**28.58**	**4.54**	**0.79**	**C0235-032-3000-S**	**1.711**	**43.45**	**5.09**	**22.64**	**3.95**	**0.69**
C0235-032-3250-M	**0.235**	**5.97**	**0.032**	**0.81**	**3.250**	**82.55**	**1.714**	**43.53**	**1.515**	**38.47**	**6.43**	**28.58**	**4.18**	**0.73**	**C0235-032-3250-S**	**1.851**	**47.01**	**5.09**	**22.64**	**3.64**	**0.64**
C0235-032-3500-M	**0.235**	**5.97**	**0.032**	**0.81**	**3.500**	**88.90**	**1.843**	**46.81**	**1.628**	**41.36**	**6.43**	**28.58**	**3.88**	**0.68**	**C0235-032-3500-S**	**1.991**	**50.57**	**5.09**	**22.64**	**3.37**	**0.59**
C0235-032-3750-M	**0.235**	**5.97**	**0.032**	**0.81**	**3.750**	**95.25**	**1.973**	**50.10**	**1.742**	**44.24**	**6.43**	**28.58**	**3.62**	**0.63**	**C0235-032-3750-S**	**2.131**	**54.13**	**5.09**	**22.64**	**3.14**	**0.55**
C0235-032-4000-M	**0.235**	**5.97**	**0.032**	**0.81**	**4.000**	**101.60**	**2.102**	**53.39**	**1.855**	**47.13**	**6.43**	**28.58**	**3.39**	**0.59**	**C0235-032-4000-S**	**2.271**	**57.69**	**5.09**	**22.64**	**2.94**	**0.52**
C0235-035-0375-M	**0.235**	**5.97**	**0.035**	**0.89**	**0.375**	**9.53**	**0.244**	**6.19**	**0.232**	**5.88**	**8.22**	**36.56**	**62.64**	**10.96**	**C0235-035-0375-S**	**0.255**	**6.48**	**6.52**	**29.01**	**54.47**	**9.53**
C0235-035-0438-M	**0.235**	**5.97**	**0.035**	**0.89**	**0.438**	**11.11**	**0.279**	**7.10**	**0.264**	**6.71**	**8.22**	**36.56**	**51.99**	**9.10**	**C0235-035-0438-S**	**0.293**	**7.45**	**6.52**	**29.01**	**45.21**	**7.91**
C0235-035-0500-M	**0.235**	**5.97**	**0.035**	**0.89**	**0.500**	**12.70**	**0.315**	**8.00**	**0.297**	**7.53**	**8.22**	**36.56**	**44.43**	**7.78**	**C0235-035-0500-S**	**0.331**	**8.41**	**6.52**	**29.01**	**38.64**	**6.76**
C0235-035-0563-M	**0.235**	**5.97**	**0.035**	**0.89**	**0.563**	**14.29**	**0.351**	**8.91**	**0.329**	**8.35**	**8.22**	**36.56**	**38.80**	**6.79**	**C0235-035-0563-S**	**0.369**	**9.38**	**6.52**	**29.01**	**33.74**	**5.90**
C0235-035-0625-M	**0.235**	**5.97**	**0.035**	**0.89**	**0.625**	**15.88**	**0.386**	**9.81**	**0.361**	**9.18**	**8.22**	**36.56**	**34.43**	**6.02**	**C0235-035-0625-S**	**0.407**	**10.34**	**6.52**	**29.01**	**29.94**	**5.24**
C0235-035-0688-M	**0.235**	**5.97**	**0.035**	**0.89**	**0.688**	**17.46**	**0.422**	**10.72**	**0.394**	**10.00**	**8.22**	**36.56**	**30.94**	**5.41**	**C0235-035-0688-S**	**0.445**	**11.31**	**6.52**	**29.01**	**26.91**	**4.71**
C0235-035-0750-M	**0.235**	**5.97**	**0.035**	**0.89**	**0.750**	**19.05**	**0.457**	**11.62**	**0.426**	**10.82**	**8.22**	**36.56**	**28.10**	**4.92**	**C0235-035-0750-S**	**0.483**	**12.27**	**6.52**	**29.01**	**24.43**	**4.28**
C0235-035-0813-M	**0.235**	**5.97**	**0.035**	**0.89**	**0.813**	**20.64**	**0.493**	**12.53**	**0.459**	**11.65**	**8.22**	**36.56**	**25.73**	**4.50**	**C0235-035-0813-S**	**0.521**	**13.23**	**6.52**	**29.01**	**22.38**	**3.92**
C0235-035-0875-M	**0.235**	**5.97**	**0.035**	**0.89**	**0.875**	**22.23**	**0.529**	**13.43**	**0.491**	**12.47**	**8.22**	**36.56**	**23.74**	**4.15**	**C0235-035-0875-S**	**0.559**	**14.20**	**6.52**	**29.01**	**20.64**	**3.61**
C0235-035-0938-M	**0.235**	**5.97**	**0.035**	**0.89**	**0.938**	**23.81**	**0.564**	**14.33**	**0.523**	**13.29**	**8.22**	**36.56**	**22.03**	**3.85**	**C0235-035-0938-S**	**0.597**	**15.16**	**6.52**	**29.01**	**19.15**	**3.35**
C0235-035-1000-M	**0.235**	**5.97**	**0.035**	**0.89**	**1.000**	**25.40**	**0.600**	**15.24**	**0.556**	**14.12**	**8.22**	**36.56**	**20.55**	**3.60**	**C0235-035-1000-S**	**0.635**	**16.13**	**6.52**	**29.01**	**17.87**	**3.13**
C0235-035-1125-M	**0.235**	**5.97**	**0.035**	**0.89**	**1.125**	**28.58**	**0.671**	**17.05**	**0.621**	**15.76**	**8.22**	**36.56**	**18.11**	**3.17**	**C0235-035-1125-S**	**0.711**	**18.06**	**6.52**	**29.01**	**15.75**	**2.76**
C0235-035-1250-M	**0.235**	**5.97**	**0.035**	**0.89**	**1.250**	**31.75**	**0.742**	**18.86**	**0.685**	**17.41**	**8.22**	**36.56**	**16.19**	**2.83**	**C0235-035-1250-S**	**0.787**	**19.99**	**6.52**	**29.01**	**14.08**	**2.46**
C0235-035-1375-M	**0.235**	**5.97**	**0.035**	**0.89**	**1.375**	**34.93**	**0.814**	**20.67**	**0.750**	**19.06**	**8.22**	**36.56**	**14.64**	**2.56**	**C0235-035-1375-S**	**0.863**	**21.91**	**6.52**	**29.01**	**12.73**	**2.23**
C0235-035-1500-M	**0.235**	**5.97**	**0.035**	**0.89**	**1.500**	**38.10**	**0.885**	**22.48**	**0.815**	**20.70**	**8.22**	**36.56**	**13.36**	**2.34**	**C0235-035-1500-S**	**0.939**	**23.84**	**6.52**	**29.01**	**11.62**	**2.03**
C0235-035-1625-M	**0.235**	**5.97**	**0.035**	**0.89**	**1.625**	**41.28**	**0.956**	**24.29**	**0.880**	**22.35**	**8.22**	**36.56**	**12.29**	**2.15**	**C0235-035-1625-S**	**1.015**	**25.77**	**6.52**	**29.01**	**10.68**	**1.87**
C0235-035-1750-M	**0.235**	**5.97**	**0.035**	**0.89**	**1.750**	**44.45**	**1.027**	**26.09**	**0.945**	**24.00**	**8.22**	**36.56**	**11.37**	**1.99**	**C0235-035-1750-S**	**1.091**	**27.70**	**6.52**	**29.01**	**9.89**	**1.73**
C0235-035-1875-M	**0.235**	**5.97**	**0.035**	**0.89**	**1.875**	**47.63**	**1.099**	**27.90**	**1.010**	**25.65**	**8.22**	**36.56**	**10.59**	**1.85**	**C0235-035-1875-S**	**1.167**	**29.63**	**6.52**	**29.01**	**9.21**	**1.61**
C0235-035-2000-M	**0.235**	**5.97**	**0.035**	**0.89**	**2.000**	**50.80**	**1.170**	**29.71**	**1.074**	**27.29**	**8.22**	**36.56**	**9.90**	**1.73**	**C0235-035-2000-S**	**1.242**	**31.56**	**6.52**	**29.01**	**8.61**	**1.51**
C0235-035-2125-M	**0.235**	**5.97**	**0.035**	**0.89**	**2.125**	**53.98**	**1.241**	**31.52**	**1.139**	**28.94**	**8.22**	**36.56**	**9.30**	**1.63**	**C0235-035-2125-S**	**1.318**	**33.49**	**6.52**	**29.01**	**8.09**	**1.41**
C0235-035-2250-M	**0.235**	**5.97**	**0.035**	**0.89**	**2.250**	**57.15**	**1.312**	**33.33**	**1.204**	**30.59**	**8.22**	**36.56**	**8.76**	**1.53**	**C0235-035-2250-S**	**1.394**	**35.42**	**6.52**	**29.01**	**7.62**	**1.33**
C0235-035-2375-M	**0.235**	**5.97**	**0.035**	**0.89**	**2.375**	**60.33**	**1.384**	**35.14**	**1.269**	**32.23**	**8.22**	**36.56**	**8.29**	**1.45**	**C0235-035-2375-S**	**1.470**	**37.34**	**6.52**	**29.01**	**7.21**	**1.26**
C0235-035-2500-M	**0.235**	**5.97**	**0.035**	**0.89**	**2.500**	**63.50**	**1.455**	**36.95**	**1.334**	**33.88**	**8.22**	**36.56**	**7.86**	**1.38**	**C0235-035-2500-S**	**1.546**	**39.27**	**6.52**	**29.01**	**6.84**	**1.20**
C0235-035-2625-M	**0.235**	**5.97**	**0.035**	**0.89**	**2.625**	**66.68**	**1.526**	**38.76**	**1.399**	**35.53**	**8.22**	**36.56**	**7.48**	**1.31**	**C0235-035-2625-S**	**1.622**	**41.20**	**6.52**	**29.01**	**6.50**	**1.14**
C0235-035-2750-M	**0.235**	**5.97**	**0.035**	**0.89**	**2.750**	**69.85**	**1.597**	**40.57**	**1.463**	**37.17**	**8.22**	**36.56**	**7.13**	**1.25**	**C0235-035-2750-S**	**1.698**	**43.13**	**6.52**	**29.01**	**6.20**	**1.08**
C0235-035-2875-M	**0.235**	**5.97**	**0.035**	**0.89**	**2.875**	**73.03**	**1.668**	**42.38**	**1.528**	**38.82**	**8.22**	**36.56**	**6.81**	**1.19**	**C0235-035-2875-S**	**1.774**	**45.06**	**6.52**	**29.01**	**5.92**	**1.04**
C0235-035-3000-M	**0.235**	**5.97**	**0.035**	**0.89**	**3.000**	**76.20**	**1.740**	**44.19**	**1.593**	**40.47**	**8.22**	**36.56**	**6.52**	**1.14**	**C0235-035-3000-S**	**1.850**	**46.99**	**6.52**	**29.01**	**5.67**	**0.99**
C0235-035-3250-M	**0.235**	**5.97**	**0.035**	**0.89**	**3.250**	**82.55**	**1.882**	**47.81**	**1.723**	**43.76**	**8.22**	**36.56**	**6.01**	**1.05**	**C0235-035-3250-S**	**2.002**	**50.85**	**6.52**	**29.01**	**5.23**	**0.91**
C0235-035-3500-M	**0.235**	**5.97**	**0.035**	**0.89**	**3.500**	**88.90**	**2.025**	**51.42**	**1.852**	**47.05**	**8.22**	**36.56**	**5.57**	**0.97**	**C0235-035-3500-S**	**2.154**	**54.70**	**6.52**	**29.01**	**4.84**	**0.85**
C0235-035-3750-M	**0.235**	**5.97**	**0.035**	**0.89**	**3.750**	**95.25**	**2.167**	**55.04**	**1.982**	**50.35**	**8.22**	**36.56**	**5.19**	**0.91**	**C0235-035-3750-S**	**2.306**	**58.56**	**6.52**	**29.01**	**4.52**	**0.79**
C0235-035-4000-M	**0.235**	**5.97**	**0.035**	**0.89**	**4.000**	**101.60**	**2.310**	**58.66**	**2.112**	**53.64**	**8.22**	**36.56**	**4.86**	**0.85**	**C0235-035-4000-S**	**2.457**	**62.42**	**6.52**	**29.01**	**4.23**	**0.74**
C0235-038-0375-M	**0.235**	**5.97**	**0.038**	**0.97**	**0.375**	**9.53**	**0.261**	**6.63**	**0.253**	**6.43**	**10.29**	**45.75**	**90.30**	**15.80**	**C0235-038-0375-S**	**0.271**	**6.88**	**8.17**	**36.35**	**78.52**	**13.74**
C0235-038-0438-M	**0.235**	**5.97**	**0.038**	**0.97**	**0.438**	**11.11**	**0.300**	**7.61**	**0.289**	**7.35**	**10.29**	**45.75**	**74.69**	**13.07**	**C0235-038-0438-S**	**0.312**	**7.92**	**8.17**	**36.35**	**64.94**	**11.37**
C0235-038-0500-M	**0.235**	**5.97**	**0.038**	**0.97**	**0.500**	**12.70**	**0.338**	**8.60**	**0.325**	**8.27**	**10.29**	**45.75**	**63.68**	**11.14**	**C0235-038-0500-S**	**0.352**	**8.95**	**8.17**	**36.35**	**55.37**	**9.69**
C0235-038-0563-M	**0.235**	**5.97**	**0.038**	**0.97**	**0.563**	**14.29**	**0.377**	**9.58**	**0.362**	**9.19**	**10.29**	**45.75**	**55.50**	**9.71**	**C0235-038-0563-S**	**0.393**	**9.99**	**8.17**	**36.35**	**48.26**	**8.44**
C0235-038-0625-M	**0.235**	**5.97**	**0.038**	**0.97**	**0.625**	**15.88**	**0.416**	**10.56**	**0.398**	**10.11**	**10.29**	**45.75**	**49.18**	**8.61**	**C0235-038-0625-S**	**0.434**	**11.02**	**8.17**	**36.35**	**42.76**	**7.48**
C0235-038-0688-M	**0.235**	**5.97**	**0.038**	**0.97**	**0.688**	**17.46**	**0.455**	**11.55**	**0.434**	**11.03**	**10.29**	**45.75**	**44.15**	**7.73**	**C0235-038-0688-S**	**0.475**	**12.06**	**8.17**	**36.35**	**38.39**	**6.72**
C0235-038-0750-M	**0.235**	**5.97**	**0.038**	**0.97**	**0.750**	**19.05**	**0.493**	**12.53**	**0.470**	**11.95**	**10.29**	**45.75**	**40.06**	**7.01**	**C0235-038-0750-S**	**0.515**	**13.09**	**8.17**	**36.35**	**34.83**	**6.10**
C0235-038-0813-M	**0.235**	**5.97**	**0.038**	**0.97**	**0.813**	**20.64**	**0.532**	**13.51**	**0.507**	**12.87**	**10.29**	**45.75**	**36.66**	**6.42**	**C0235-038-0813-S**	**0.556**	**14.13**	**8.17**	**36.35**	**31.88**	**5.58**
C0235-038-0875-M	**0.235**	**5.97**	**0.038**	**0.97**	**0.875**	**22.23**	**0.571**	**14.49**	**0.543**	**13.79**	**10.29**	**45.75**	**33.79**	**5.91**	**C0235-038-0875-S**	**0.597**	**15.16**	**8.17**	**36.35**	**29.38**	**5.14**
C0235-038-0938-M	**0.235**	**5.97**	**0.038**	**0.97**	**0.938**	**23.81**	**0.609**	**15.48**	**0.579**	**14.71**	**10.29**	**45.75**	**31.34**	**5.48**	**C0235-038-0938-S**	**0.638**	**16.20**	**8.17**	**36.35**	**27.25**	**4.77**
C0235-038-1000-M	**0.235**	**5.97**	**0.038**	**0.97**	**1.000**	**25.40**	**0.648**	**16.46**	**0.615**	**15.63**	**10.29**	**45.75**	**29.22**	**5.11**	**C0235-038-1000-S**	**0.678**	**17.23**	**8.17**	**36.35**	**25.41**	**4.45**
C0235-038-1125-M	**0.235**	**5.97**	**0.038**	**0.97**	**1.125**	**28.58**	**0.725**	**18.42**	**0.688**	**17.46**	**10.29**	**45.75**	**25.74**	**4.50**	**C0235-038-1125-S**	**0.760**	**19.30**	**8.17**	**36.35**	**22.38**	**3.92**
C0235-038-1250-M	**0.235**	**5.97**	**0.038**	**0.97**	**1.250**	**31.75**	**0.803**	**20.39**	**0.760**	**19.30**	**10.29**	**45.75**	**23.00**	**4.02**	**C0235-038-1250-S**	**0.841**	**21.37**	**8.17**	**36.35**	**20.00**	**3.50**
C0235-038-1375-M	**0.235**	**5.97**	**0.038**	**0.97**	**1.375**	**34.93**	**0.880**	**22.36**	**0.832**	**21.14**	**10.29**	**45.75**	**20.78**	**3.64**	**C0235-038-1375-S**	**0.923**	**23.44**	**8.17**	**36.35**	**18.07**	**3.16**
C0235-038-1500-M	**0.235**	**5.97**	**0.038**	**0.97**	**1.500**	**38.10**	**0.958**	**24.32**	**0.905**	**22.98**	**10.29**	**45.75**	**18.96**	**3.32**	**C0235-038-1500-S**	**1.004**	**25.51**	**8.17**	**36.35**	**16.49**	**2.89**
C0235-038-1625-M	**0.235**	**5.97**	**0.038**	**0.97**	**1.625**	**41.28**	**1.035**	**26.29**	**0.977**	**24.82**	**10.29**	**45.75**	**17.43**	**3.05**	**C0235-038-1625-S**	**1.086**	**27.58**	**8.17**	**36.35**	**15.16**	**2.65**
C0235-038-1750-M	**0.235**	**5.97**	**0.038**	**0.97**	**1.750**	**44.45**	**1.112**	**28.25**	**1.050**	**26.66**	**10.29**	**45.75**	**16.13**	**2.82**	**C0235-038-1750-S**	**1.167**	**29.65**	**8.17**	**36.35**	**14.02**	**2.45**
C0235-038-1875-M	**0.235**	**5.97**	**0.038**	**0.97**	**1.875**	**47.63**	**1.190**	**30.22**	**1.122**	**28.50**	**10.29**	**45.75**	**15.01**	**2.63**	**C0235-038-1875-S**	**1.249**	**31.72**	**8.17**	**36.35**	**13.05**	**2.28**
C0235-038-2000-M	**0.235**	**5.97**	**0.038**	**0.97**	**2.000**	**50.80**	**1.267**	**32.18**	**1.195**	**30.34**	**10.29**	**45.75**	**14.03**	**2.46**	**C0235-038-2000-S**	**1.330**	**33.79**	**8.17**	**36.35**	**12.20**	**2.14**
C0235-038-2125-M	**0.235**	**5.97**	**0.038**	**0.97**	**2.125**	**53.98**	**1.344**	**34.15**	**1.267**	**32.18**	**10.29**	**45.75**	**13.18**	**2.31**	**C0235-038-2125-S**	**1.412**	**35.86**	**8.17**	**36.35**	**11.46**	**2.01**
C0235-038-2250-M	**0.235**	**5.97**	**0.038**	**0.97**	**2.250**	**57.15**	**1.422**	**36.11**	**1.339**	**34.02**	**10.29**	**45.75**	**12.42**	**2.17**	**C0235-038-2250-S**	**1.493**	**37.93**	**8.17**	**36.35**	**10.80**	**1.89**
C0235-038-2375-M	**0.235**	**5.97**	**0.038**	**0.97**	**2.375**	**60.33**	**1.499**	**38.08**	**1.412**	**35.86**	**10.29**	**45.75**	**11.74**	**2.06**	**C0235-038-2375-S**	**1.575**	**40.00**	**8.17**	**36.35**	**10.21**	**1.79**
C0235-038-2500-M	**0.235**	**5.97**	**0.038**	**0.97**	**2.500**	**63.50**	**1.577**	**40.04**	**1.484**	**37.70**	**10.29**	**45.75**	**11.14**	**1.95**	**C0235-038-2500-S**	**1.656**	**42.07**	**8.17**	**36.35**	**9.69**	**1.69**
C0235-038-2625-M	**0.235**	**5.97**	**0.038**	**0.97**	**2.625**	**66.68**	**1.654**	**42.01**	**1.557**	**39.54**	**10.29**	**45.75**	**10.59**	**1.85**	**C0235-038-2625-S**	**1.738**	**44.14**	**8.17**	**36.35**	**9.21**	**1.61**
C0235-038-2750-M	**0.235**	**5.97**	**0.038**	**0.97**	**2.750**	**69.85**	**1.731**	**43.98**	**1.629**	**41.38**	**10.29**	**45.75**	**10.10**	**1.77**	**C0235-038-2750-S**	**1.819**	**46.21**	**8.17**	**36.35**	**8.78**	**1.54**
C0235-038-2875-M	**0.235**	**5.97**	**0.038**	**0.97**	**2.875**	**73.03**	**1.809**	**45.94**	**1.702**	**43.22**	**10.29**	**45.75**	**9.65**	**1.69**	**C0235-038-2875-S**	**1.901**	**48.28**	**8.17**	**36.35**	**8.39**	**1.47**
C0235-038-3000-M	**0.235**	**5.97**	**0.038**	**0.97**	**3.000**	**76.20**	**1.886**	**47.91**	**1.774**	**45.06**	**10.29**	**45.75**	**9.23**	**1.62**	**C0235-038-3000-S**	**1.982**	**50.35**	**8.17**	**36.35**	**8.03**	**1.41**
C0235-038-3250-M	**0.235**	**5.97**	**0.038**	**0.97**	**3.250**	**82.55**	**2.041**	**51.84**	**1.919**	**48.74**	**10.29**	**45.75**	**8.51**	**1.49**	**C0235-038-3250-S**	**2.145**	**54.49**	**8.17**	**36.35**	**7.40**	**1.29**

Part Numbers with an "*" are squared and not ground. **Part Numbers in bold** represent the newly expanded Associated Spring RAYMOND compression spring offering.

MUSIC WIRE															STAINLESS STEEL						
Catalog #	Outside Diameter (OD)		Wire Diameter (d)		Free Length (L) Approx		Load Length (L_1)		Solid Height (Sh) Approx		Load (P) at L_1		Spring Rate (R)		Catalog #	Load Length (L_1)		Load (P) at L_1		Spring Rate (R)	
	in	mm	in	mm	in	mm	in	mm	in	mm	lb	N	lb/in	N/mm		in	mm	lb	N	lb/in	N/mm
C0235-038-3500-M	0.235	5.97	0.038	0.97	3.500	88.90	2.196	55.77	2.064	52.42	10.29	45.75	7.89	1.38	**C0235-038-3500-S**	2.308	58.63	8.17	36.35	6.86	1.20
C0235-038-3750-M	0.235	5.97	0.038	0.97	3.750	95.25	2.350	59.70	2.209	56.10	10.29	45.75	7.35	1.29	**C0235-038-3750-S**	2.471	62.76	8.17	36.35	6.39	1.12
C0235-040-0375-M	0.235	5.97	0.040	1.02	0.375	9.53	0.272	6.90	0.266	6.76	11.82	52.58	114.44	20.03	**C0235-040-0375-S**	0.281	7.13	9.40	41.81	99.51	17.41
C0235-040-0438-M	0.235	5.97	0.040	1.02	0.438	11.11	0.312	7.93	0.305	7.74	11.82	52.58	94.43	16.53	**C0235-040-0438-S**	0.323	8.21	9.40	41.81	82.11	14.37
C0235-040-0500-M	0.235	5.97	0.040	1.02	0.500	12.70	0.353	8.96	0.343	8.72	11.82	52.58	80.38	14.07	**C0235-040-0500-S**	0.366	9.28	9.40	41.81	69.89	12.23
C0235-040-0563-M	0.235	5.97	0.040	1.02	0.563	14.29	0.394	10.00	0.382	9.70	11.82	52.58	69.97	12.24	**C0235-040-0563-S**	0.408	10.36	9.40	41.81	60.84	10.65
C0235-040-0625-M	0.235	5.97	0.040	1.02	0.625	15.88	0.434	11.03	0.421	10.68	11.82	52.58	61.94	10.84	**C0235-040-0625-S**	0.451	11.44	9.40	41.81	53.86	9.43
C0235-040-0688-M	0.235	5.97	0.040	1.02	0.688	17.46	0.475	12.06	0.459	11.66	11.82	52.58	55.57	9.72	**C0235-040-0688-S**	0.493	12.52	9.40	41.81	48.32	8.46
C0235-040-0750-M	0.235	5.97	0.040	1.02	0.750	19.05	0.515	13.09	0.498	12.64	11.82	52.58	50.39	8.82	**C0235-040-0750-S**	0.535	13.60	9.40	41.81	43.81	7.67
C0235-040-0813-M	0.235	5.97	0.040	1.02	0.813	20.64	0.556	14.12	0.536	13.62	11.82	52.58	46.09	8.07	**C0235-040-0813-S**	0.578	14.68	9.40	41.81	40.08	7.01
C0235-040-0875-M	0.235	5.97	0.040	1.02	0.875	22.23	0.597	15.15	0.575	14.60	11.82	52.58	42.46	7.43	**C0235-040-0875-S**	0.620	15.76	9.40	41.81	36.93	6.46
C0235-040-0938-M	0.235	5.97	0.040	1.02	0.938	23.81	0.637	16.19	0.613	15.58	11.82	52.58	39.37	6.89	**C0235-040-0938-S**	0.663	16.84	9.40	41.81	34.23	5.99
C0235-040-1000-M	0.235	5.97	0.040	1.02	1.000	25.40	0.678	17.22	0.652	16.56	11.82	52.58	36.69	6.42	**C0235-040-1000-S**	0.705	17.92	9.40	41.81	31.91	5.58
C0235-040-1125-M	0.235	5.97	0.040	1.02	1.125	28.58	0.759	19.28	0.729	18.52	11.82	52.58	32.31	5.65	**C0235-040-1125-S**	0.790	20.08	9.40	41.81	28.09	4.92
C0235-040-1250-M	0.235	5.97	0.040	1.02	1.250	31.75	0.840	21.34	0.806	20.48	11.82	52.58	28.85	5.05	**C0235-040-1250-S**	0.875	22.24	9.40	41.81	25.09	4.39
C0235-040-1375-M	0.235	5.97	0.040	1.02	1.375	34.93	0.922	23.41	0.884	22.44	11.82	52.58	26.07	4.56	**C0235-040-1375-S**	0.960	24.39	9.40	41.81	22.67	3.97
C0235-040-1500-M	0.235	5.97	0.040	1.02	1.500	38.10	1.003	25.47	0.961	24.40	11.82	52.58	23.77	4.16	**C0235-040-1500-S**	1.045	26.55	9.40	41.81	20.67	3.62
C0235-040-1625-M	0.235	5.97	0.040	1.02	1.625	41.28	1.084	27.53	1.038	26.36	11.82	52.58	21.85	3.82	**C0235-040-1625-S**	1.130	28.71	9.40	41.81	19.00	3.33
C0235-040-1750-M	0.235	5.97	0.040	1.02	1.750	44.45	1.165	29.60	1.115	28.33	11.82	52.58	20.22	3.54	**C0235-040-1750-S**	1.215	30.87	9.40	41.81	17.58	3.08
C0235-040-1875-M	0.235	5.97	0.040	1.02	1.875	47.63	1.246	31.66	1.192	30.29	11.82	52.58	18.81	3.29	**C0235-040-1875-S**	1.300	33.03	9.40	41.81	16.35	2.86
C0235-040-2000-M	0.235	5.97	0.040	1.02	2.000	50.80	1.328	33.72	1.270	32.25	11.82	52.58	17.58	3.08	**C0235-040-2000-S**	1.385	35.19	9.40	41.81	15.29	2.68
C0235-040-2125-M	0.235	5.97	0.040	1.02	2.125	53.98	1.409	35.79	1.347	34.21	11.82	52.58	16.51	2.89	**C0235-040-2125-S**	1.470	37.34	9.40	41.81	14.36	2.51
C0235-040-2250-M	0.235	5.97	0.040	1.02	2.250	57.15	1.490	37.85	1.424	36.17	11.82	52.58	15.56	2.72	**C0235-040-2250-S**	1.555	39.50	9.40	41.81	13.53	2.37
C0235-040-2375-M	0.235	5.97	0.040	1.02	2.375	60.33	1.571	39.91	1.501	38.13	11.82	52.58	14.71	2.57	**C0235-040-2375-S**	1.640	41.66	9.40	41.81	12.79	2.24
C0235-040-2500-M	0.235	5.97	0.040	1.02	2.500	63.50	1.653	41.98	1.578	40.09	11.82	52.58	13.95	2.44	**C0235-040-2500-S**	1.725	43.82	9.40	41.81	12.13	2.12
C0235-040-2625-M	0.235	5.97	0.040	1.02	2.625	66.68	1.734	44.04	1.655	42.05	11.82	52.58	13.27	2.32	**C0235-040-2625-S**	1.810	45.98	9.40	41.81	11.53	2.02
C0235-040-2750-M	0.235	5.97	0.040	1.02	2.750	69.85	1.815	46.10	1.733	44.01	11.82	52.58	12.64	2.21	**C0235-040-2750-S**	1.895	48.14	9.40	41.81	10.99	1.92
C0235-040-2875-M	0.235	5.97	0.040	1.02	2.875	73.03	1.896	48.17	1.810	45.97	11.82	52.58	12.08	2.11	**C0235-040-2875-S**	1.980	50.30	9.40	41.81	10.50	1.84
C0235-040-3000-M	0.235	5.97	0.040	1.02	3.000	76.20	1.978	50.23	1.887	47.93	11.82	52.58	11.56	2.02	**C0235-040-3000-S**	2.065	52.45	9.40	41.81	10.05	1.76
C0235-040-3250-M	0.235	5.97	0.040	1.02	3.250	82.55	2.140	54.36	2.041	51.85	11.82	52.58	10.65	1.86	**C0235-040-3250-S**	2.235	56.77	9.40	41.81	9.26	1.62
C0235-040-3500-M	0.235	5.97	0.040	1.02	3.500	88.90	2.302	58.48	2.196	55.77	11.82	52.58	9.87	1.73	**C0235-040-3500-S**	2.405	61.09	9.40	41.81	8.58	1.50
C0235-040-3750-M	0.235	5.97	0.040	1.02	3.750	95.25	2.465	62.61	2.350	59.69	11.82	52.58	9.20	1.61	**C0235-040-3750-S**	2.575	65.41	9.40	41.81	8.00	1.40
C0235-042-0375-M	0.235	5.97	0.042	1.07	0.375	9.53	0.282	7.15	0.278	7.07	13.48	59.98	144.32	25.26	**C0235-042-0375-S**	0.290	7.35	10.73	47.71	125.49	21.96
C0235-042-0438-M	0.235	5.97	0.042	1.07	0.438	11.11	0.324	8.23	0.319	8.11	13.48	59.98	118.80	20.79	**C0235-042-0438-S**	0.334	8.48	10.73	47.71	103.30	18.08
C0235-042-0500-M	0.235	5.97	0.042	1.07	0.500	12.70	0.366	9.31	0.360	9.14	13.48	59.98	100.95	17.67	**C0235-042-0500-S**	0.378	9.60	10.73	47.71	87.78	15.36
C0235-042-0563-M	0.235	5.97	0.042	1.07	0.563	14.29	0.409	10.39	0.401	10.18	13.48	59.98	87.77	15.36	**C0235-042-0563-S**	0.422	10.72	10.73	47.71	76.32	13.36
C0235-042-0625-M	0.235	5.97	0.042	1.07	0.625	15.88	0.451	11.46	0.442	11.22	13.48	59.98	77.63	13.58	**C0235-042-0625-S**	0.466	11.84	10.73	47.71	67.50	11.81
C0235-042-0688-M	0.235	5.97	0.042	1.07	0.688	17.46	0.494	12.54	0.483	12.26	13.48	59.98	69.59	12.18	**C0235-042-0688-S**	0.510	12.96	10.73	47.71	60.51	10.59
C0235-042-0750-M	0.235	5.97	0.042	1.07	0.750	19.05	0.536	13.62	0.523	13.29	13.48	59.98	63.06	11.03	**C0235-042-0750-S**	0.554	14.08	10.73	47.71	54.83	9.60
C0235-042-0813-M	0.235	5.97	0.042	1.07	0.813	20.64	0.579	14.70	0.564	14.33	13.48	59.98	57.65	10.09	**C0235-042-0813-S**	0.599	15.20	10.73	47.71	50.13	8.77
C0235-042-0875-M	0.235	5.97	0.042	1.07	0.875	22.23	0.621	15.77	0.605	15.37	13.48	59.98	53.09	9.29	**C0235-042-0875-S**	0.643	16.32	10.73	47.71	46.17	8.08
C0235-042-0938-M	0.235	5.97	0.042	1.07	0.938	23.81	0.663	16.85	0.646	16.40	13.48	59.98	49.20	8.61	**C0235-042-0938-S**	0.687	17.45	10.73	47.71	42.79	7.49
C0235-042-1000-M	0.235	5.97	0.042	1.07	1.000	25.40	0.706	17.93	0.687	17.44	13.48	59.98	45.85	8.02	**C0235-042-1000-S**	0.731	18.57	10.73	47.71	39.87	6.98
C0235-042-1125-M	0.235	5.97	0.042	1.07	1.125	28.58	0.791	20.09	0.768	19.52	13.48	59.98	40.34	7.06	**C0235-042-1125-S**	0.819	20.81	10.73	47.71	35.08	6.14
C0235-042-1250-M	0.235	5.97	0.042	1.07	1.250	31.75	0.876	22.24	0.850	21.59	13.48	59.98	36.02	6.30	**C0235-042-1250-S**	0.908	23.05	10.73	47.71	31.32	5.48
C0235-042-1375-M	0.235	5.97	0.042	1.07	1.375	34.93	0.960	24.40	0.932	23.67	13.48	59.98	32.53	5.69	**C0235-042-1375-S**	0.996	25.29	10.73	47.71	28.29	4.95
C0235-042-1500-M	0.235	5.97	0.042	1.07	1.500	38.10	1.045	26.55	1.013	25.74	13.48	59.98	29.66	5.19	**C0235-042-1500-S**	1.084	27.54	10.73	47.71	25.79	4.51
C0235-042-1625-M	0.235	5.97	0.042	1.07	1.625	41.28	1.130	28.71	1.095	27.81	13.48	59.98	27.25	4.77	**C0235-042-1625-S**	1.172	29.78	10.73	47.71	23.70	4.15
C0235-042-1750-M	0.235	5.97	0.042	1.07	1.750	44.45	1.215	30.86	1.177	29.89	13.48	59.98	25.21	4.41	**C0235-042-1750-S**	1.261	32.02	10.73	47.71	21.92	3.84
C0235-042-1875-M	0.235	5.97	0.042	1.07	1.875	47.63	1.300	33.02	1.258	31.96	13.48	59.98	23.45	4.10	**C0235-042-1875-S**	1.349	34.26	10.73	47.71	20.39	3.57
C0235-042-2000-M	0.235	5.97	0.042	1.07	2.000	50.80	1.385	35.17	1.340	34.04	13.48	59.98	21.92	3.84	**C0235-042-2000-S**	1.437	36.51	10.73	47.71	19.06	3.34
C0235-042-2125-M	0.235	5.97	0.042	1.07	2.125	53.98	1.470	37.33	1.422	36.11	13.48	59.98	20.58	3.60	**C0235-042-2125-S**	1.526	38.75	10.73	47.71	17.89	3.13
C0235-042-2250-M	0.235	5.97	0.042	1.07	2.250	57.15	1.555	39.49	1.503	38.19	13.48	59.98	19.39	3.39	**C0235-042-2250-S**	1.614	40.99	10.73	47.71	16.86	2.95
C0235-042-2375-M	0.235	5.97	0.042	1.07	2.375	60.33	1.639	41.64	1.585	40.26	13.48	59.98	18.33	3.21	**C0235-042-2375-S**	1.702	43.23	10.73	47.71	15.94	2.79
C0235-042-2500-M	0.235	5.97	0.042	1.07	2.500	63.50	1.724	43.80	1.667	42.34	13.48	59.98	17.38	3.04	**C0235-042-2500-S**	1.790	45.48	10.73	47.71	15.12	2.65
C0235-042-2625-M	0.235	5.97	0.042	1.07	2.625	66.68	1.809	45.95	1.748	44.41	13.48	59.98	16.53	2.89	**C0235-042-2625-S**	1.879	47.72	10.73	47.71	14.37	2.51
C0235-042-2750-M	0.235	5.97	0.042	1.07	2.750	69.85	1.894	48.11	1.830	46.48	13.48	59.98	15.75	2.76	**C0235-042-2750-S**	1.967	49.96	10.73	47.71	13.70	2.40
C0235-042-2875-M	0.235	5.97	0.042	1.07	2.875	73.03	1.979	50.26	1.912	48.56	13.48	59.98	15.05	2.63	**C0235-042-2875-S**	2.055	52.20	10.73	47.71	13.08	2.29
C0235-042-3000-M	0.235	5.97	0.042	1.07	3.000	76.20	2.064	52.42	1.993	50.63	13.48	59.98	14.40	2.52	**C0235-042-3000-S**	2.144	54.45	10.73	47.71	12.52	2.19
C0235-042-3250-M	0.235	5.97	0.042	1.07	3.250	82.55	2.233	56.73	2.157	54.78	13.48	59.98	13.27	2.32	**C0235-042-3250-S**	2.320	58.93	10.73	47.71	11.53	2.02
C0235-042-3500-M	0.235	5.97	0.042	1.07	3.500	88.90	2.403	61.04	2.320	58.93	13.48	59.98	12.29	2.15	**C0235-042-3500-S**	2.497	63.42	10.73	47.71	10.69	1.87
C0235-042-3750-M	0.235	5.97	0.042	1.07	3.750	95.25	2.573	65.35	2.483	63.08	13.48	59.98	11.46	2.00	**C0235-042-3750-S**	2.673	67.90	10.73	47.71	9.96	1.74
C0235-045-0375-M	0.235	5.97	0.045	1.14	0.375	9.53	0.295	7.49	0.295	7.49	16.22	72.16	202.66	35.47	**C0235-045-0375-S**	0.302	7.66	12.91	57.42	176.22	30.84
C0235-045-0438-M	0.235	5.97	0.045	1.14	0.438	11.11	0.340	8.63	0.339	8.61	16.22	72.16	166.21	29.09	**C0235-045-0438-S**	0.348	8.84	12.91	57.42	144.53	25.29

FOR INFORMATION ON ALTERNATIVE FINISHES, SEE PAGE 311

Part Numbers with an "*" are squared and not ground. **Part Numbers in bold** represent the newly expanded Associated Spring RAYMOND compression spring offering.

(OD) 0.235 - 0.240

MUSIC WIRE															STAINLESS STEEL						
Catalog #	Outside Diameter (OD)		Wire Diameter (d)		Free Length (L) Approx		Load Length (L_1)		Solid Height (Sh) Approx		Load (P) at L_1		Spring Rate (R)		Catalog #	Load Length (L_1)		Load (P) at L_1		Spring Rate (R)	
	in	mm	in	mm	in	mm	in	mm	in	mm	lb	N	lb/in	N/mm		in	mm	lb	N	lb/in	N/mm
C0235-045-0500-M	**0.235**	**5.97**	**0.045**	**1.14**	**0.500**	**12.70**	**0.385**	**9.78**	**0.383**	**9.72**	**16.22**	**72.16**	**140.87**	**24.65**	**C0235-045-0500-S**	**0.395**	**10.02**	**12.91**	**57.42**	**122.50**	**21.44**
C0235-045-0563-M	**0.235**	**5.97**	**0.045**	**1.14**	**0.563**	**14.29**	**0.430**	**10.92**	**0.427**	**10.84**	**16.22**	**72.16**	**122.24**	**21.39**	**C0235-045-0563-S**	**0.441**	**11.20**	**12.91**	**57.42**	**106.29**	**18.60**
C0235-045-0625-M	**0.235**	**5.97**	**0.045**	**1.14**	**0.625**	**15.88**	**0.475**	**12.06**	**0.471**	**11.95**	**16.22**	**72.16**	**107.96**	**18.89**	**C0235-045-0625-S**	**0.487**	**12.38**	**12.91**	**57.42**	**93.88**	**16.43**
C0235-045-0688-M	**0.235**	**5.97**	**0.045**	**1.14**	**0.688**	**17.46**	**0.520**	**13.20**	**0.515**	**13.07**	**16.22**	**72.16**	**96.67**	**16.92**	**C0235-045-0688-S**	**0.534**	**13.56**	**12.91**	**57.42**	**84.06**	**14.71**
C0235-045-0750-M	**0.235**	**5.97**	**0.045**	**1.14**	**0.750**	**19.05**	**0.565**	**14.34**	**0.559**	**14.19**	**16.22**	**72.16**	**87.51**	**15.31**	**C0235-045-0750-S**	**0.580**	**14.74**	**12.91**	**57.42**	**76.10**	**13.32**
C0235-045-0813-M	**0.235**	**5.97**	**0.045**	**1.14**	**0.813**	**20.64**	**0.610**	**15.48**	**0.602**	**15.30**	**16.22**	**72.16**	**79.94**	**13.99**	**C0235-045-0813-S**	**0.627**	**15.92**	**12.91**	**57.42**	**69.51**	**12.16**
C0235-045-0875-M	**0.235**	**5.97**	**0.045**	**1.14**	**0.875**	**22.23**	**0.655**	**16.62**	**0.646**	**16.42**	**16.22**	**72.16**	**73.58**	**12.88**	**C0235-045-0875-S**	**0.673**	**17.10**	**12.91**	**57.42**	**63.98**	**11.20**
C0235-045-0938-M	**0.235**	**5.97**	**0.045**	**1.14**	**0.938**	**23.81**	**0.699**	**17.77**	**0.690**	**17.53**	**16.22**	**72.16**	**68.15**	**11.93**	**C0235-045-0938-S**	**0.720**	**18.28**	**12.91**	**57.42**	**59.26**	**10.37**
C0235-045-1000-M	**0.235**	**5.97**	**0.045**	**1.14**	**1.000**	**25.40**	**0.744**	**18.91**	**0.734**	**18.65**	**16.22**	**72.16**	**63.47**	**11.11**	**C0235-045-1000-S**	**0.766**	**19.46**	**12.91**	**57.42**	**55.19**	**9.66**
C0235-045-1125-M	**0.235**	**5.97**	**0.045**	**1.14**	**1.125**	**28.58**	**0.834**	**21.19**	**0.822**	**20.88**	**16.22**	**72.16**	**55.80**	**9.77**	**C0235-045-1125-S**	**0.859**	**21.82**	**12.91**	**57.42**	**48.53**	**8.49**
C0235-045-1250-M	**0.235**	**5.97**	**0.045**	**1.14**	**1.250**	**31.75**	**0.924**	**23.47**	**0.910**	**23.12**	**16.22**	**72.16**	**49.79**	**8.71**	**C0235-045-1250-S**	**0.952**	**24.18**	**12.91**	**57.42**	**43.30**	**7.58**
C0235-045-1375-M	**0.235**	**5.97**	**0.045**	**1.14**	**1.375**	**34.93**	**1.014**	**25.76**	**0.998**	**25.35**	**16.22**	**72.16**	**44.95**	**7.87**	**C0235-045-1375-S**	**1.045**	**26.54**	**12.91**	**57.42**	**39.09**	**6.84**
C0235-045-1500-M	**0.235**	**5.97**	**0.045**	**1.14**	**1.500**	**38.10**	**1.104**	**28.04**	**1.086**	**27.58**	**16.22**	**72.16**	**40.96**	**7.17**	**C0235-045-1500-S**	**1.138**	**28.89**	**12.91**	**57.42**	**35.62**	**6.23**
C0235-045-1625-M	**0.235**	**5.97**	**0.045**	**1.14**	**1.625**	**41.28**	**1.194**	**30.32**	**1.174**	**29.81**	**16.22**	**72.16**	**37.63**	**6.58**	**C0235-045-1625-S**	**1.230**	**31.25**	**12.91**	**57.42**	**32.72**	**5.73**
C0235-045-1750-M	**0.235**	**5.97**	**0.045**	**1.14**	**1.750**	**44.45**	**1.284**	**32.61**	**1.262**	**32.04**	**16.22**	**72.16**	**34.79**	**6.09**	**C0235-045-1750-S**	**1.323**	**33.61**	**12.91**	**57.42**	**30.26**	**5.29**
C0235-045-1875-M	**0.235**	**5.97**	**0.045**	**1.14**	**1.875**	**47.63**	**1.374**	**34.89**	**1.349**	**34.28**	**16.22**	**72.16**	**32.36**	**5.66**	**C0235-045-1875-S**	**1.416**	**35.97**	**12.91**	**57.42**	**28.14**	**4.92**
C0235-045-2000-M	**0.235**	**5.97**	**0.045**	**1.14**	**2.000**	**50.80**	**1.464**	**37.17**	**1.437**	**36.51**	**16.22**	**72.16**	**30.24**	**5.29**	**C0235-045-2000-S**	**1.509**	**38.33**	**12.91**	**57.42**	**26.30**	**4.60**
C0235-045-2125-M	**0.235**	**5.97**	**0.045**	**1.14**	**2.125**	**53.98**	**1.553**	**39.46**	**1.525**	**38.74**	**16.22**	**72.16**	**28.38**	**4.97**	**C0235-045-2125-S**	**1.602**	**40.69**	**12.91**	**57.42**	**24.68**	**4.32**
C0235-045-2250-M	**0.235**	**5.97**	**0.045**	**1.14**	**2.250**	**57.15**	**1.643**	**41.74**	**1.613**	**40.97**	**16.22**	**72.16**	**26.74**	**4.68**	**C0235-045-2250-S**	**1.695**	**43.05**	**12.91**	**57.42**	**23.25**	**4.07**
C0235-045-2375-M	**0.235**	**5.97**	**0.045**	**1.14**	**2.375**	**60.33**	**1.733**	**44.02**	**1.701**	**43.21**	**16.22**	**72.16**	**25.28**	**4.42**	**C0235-045-2375-S**	**1.788**	**45.41**	**12.91**	**57.42**	**21.98**	**3.85**
C0235-045-2500-M	**0.235**	**5.97**	**0.045**	**1.14**	**2.500**	**63.50**	**1.823**	**46.31**	**1.789**	**45.44**	**16.22**	**72.16**	**23.97**	**4.19**	**C0235-045-2500-S**	**1.881**	**47.77**	**12.91**	**57.42**	**20.84**	**3.65**
C0235-045-2625-M	**0.235**	**5.97**	**0.045**	**1.14**	**2.625**	**66.68**	**1.913**	**48.59**	**1.877**	**47.67**	**16.22**	**72.16**	**22.78**	**3.99**	**C0235-045-2625-S**	**1.973**	**50.13**	**12.91**	**57.42**	**19.81**	**3.47**
C0235-045-2750-M	**0.235**	**5.97**	**0.045**	**1.14**	**2.750**	**69.85**	**2.003**	**50.87**	**1.965**	**49.90**	**16.22**	**72.16**	**21.71**	**3.80**	**C0235-045-2750-S**	**2.066**	**52.48**	**12.91**	**57.42**	**18.88**	**3.30**
C0235-045-2875-M	**0.235**	**5.97**	**0.045**	**1.14**	**2.875**	**73.03**	**2.093**	**53.16**	**2.053**	**52.13**	**16.22**	**72.16**	**20.74**	**3.63**	**C0235-045-2875-S**	**2.159**	**54.84**	**12.91**	**57.42**	**18.03**	**3.16**
C0235-045-3000-M	**0.235**	**5.97**	**0.045**	**1.14**	**3.000**	**76.20**	**2.183**	**55.44**	**2.140**	**54.37**	**16.22**	**72.16**	**19.85**	**3.47**	**C0235-045-3000-S**	**2.252**	**57.20**	**12.91**	**57.42**	**17.26**	**3.02**
C0235-045-3250-M	**0.235**	**5.97**	**0.045**	**1.14**	**3.250**	**82.55**	**2.362**	**60.01**	**2.316**	**58.83**	**16.22**	**72.16**	**18.28**	**3.20**	**C0235-045-3250-S**	**2.438**	**61.92**	**12.91**	**57.42**	**15.89**	**2.78**
C0235-045-3500-M	**0.235**	**5.97**	**0.045**	**1.14**	**3.500**	**88.90**	**2.542**	**64.57**	**2.492**	**63.29**	**16.22**	**72.16**	**16.94**	**2.96**	**C0235-045-3500-S**	**2.624**	**66.64**	**12.91**	**57.42**	**14.73**	**2.58**
C0235-045-3750-M	**0.235**	**5.97**	**0.045**	**1.14**	**3.750**	**95.25**	**2.722**	**69.14**	**2.668**	**67.76**	**16.22**	**72.16**	**15.78**	**2.76**	**C0235-045-3750-S**	**2.809**	**71.36**	**12.91**	**57.42**	**13.72**	**2.40**
C0235-047-0375-M	**0.235**	**5.97**	**0.047**	**1.19**	**0.375**	**9.53**	**0.315**	**8.01**	**0.305**	**7.74**	**15.09**	**67.13**	**252.81**	**44.24**	**C0235-047-0375-S**	**0.309**	**7.85**	**14.49**	**64.47**	**219.84**	**38.47**
C0235-047-0438-M	**0.235**	**5.97**	**0.047**	**1.19**	**0.438**	**11.11**	**0.364**	**9.24**	**0.351**	**8.91**	**15.28**	**67.95**	**206.81**	**36.19**	**C0235-047-0438-S**	**0.357**	**9.07**	**14.49**	**64.47**	**179.84**	**31.47**
C0235-047-0500-M	**0.235**	**5.97**	**0.047**	**1.19**	**0.500**	**12.70**	**0.412**	**10.46**	**0.396**	**10.07**	**15.40**	**68.51**	**174.98**	**30.62**	**C0235-047-0500-S**	**0.405**	**10.28**	**14.49**	**64.47**	**152.15**	**26.63**
C0235-047-0563-M	**0.235**	**5.97**	**0.047**	**1.19**	**0.563**	**14.29**	**0.442**	**11.24**	**0.442**	**11.23**	**18.21**	**81.00**	**151.63**	**26.54**	**C0235-047-0563-S**	**0.453**	**11.50**	**14.49**	**64.47**	**131.86**	**23.07**
C0235-047-0625-M	**0.235**	**5.97**	**0.047**	**1.19**	**0.625**	**15.88**	**0.489**	**12.42**	**0.488**	**12.40**	**18.21**	**81.00**	**133.79**	**23.41**	**C0235-047-0625-S**	**0.500**	**12.71**	**14.49**	**64.47**	**116.34**	**20.36**
C0235-047-0688-M	**0.235**	**5.97**	**0.047**	**1.19**	**0.688**	**17.46**	**0.535**	**13.60**	**0.534**	**13.56**	**18.21**	**81.00**	**119.70**	**20.95**	**C0235-047-0688-S**	**0.548**	**13.93**	**14.49**	**64.47**	**104.08**	**18.21**
C0235-047-0750-M	**0.235**	**5.97**	**0.047**	**1.19**	**0.750**	**19.05**	**0.582**	**14.78**	**0.580**	**14.73**	**18.21**	**81.00**	**108.29**	**18.95**	**C0235-047-0750-S**	**0.596**	**15.14**	**14.49**	**64.47**	**94.17**	**16.48**
C0235-047-0813-M	**0.235**	**5.97**	**0.047**	**1.19**	**0.813**	**20.64**	**0.628**	**15.96**	**0.626**	**15.89**	**18.21**	**81.00**	**98.87**	**17.30**	**C0235-047-0813-S**	**0.644**	**16.36**	**14.49**	**64.47**	**85.98**	**15.05**
C0235-047-0875-M	**0.235**	**5.97**	**0.047**	**1.19**	**0.875**	**22.23**	**0.675**	**17.14**	**0.671**	**17.05**	**18.21**	**81.00**	**90.96**	**15.92**	**C0235-047-0875-S**	**0.692**	**17.57**	**14.49**	**64.47**	**79.10**	**13.84**
C0235-047-0938-M	**0.235**	**5.97**	**0.047**	**1.19**	**0.938**	**23.81**	**0.721**	**18.32**	**0.717**	**18.22**	**18.21**	**81.00**	**84.22**	**14.74**	**C0235-047-0938-S**	**0.740**	**18.79**	**14.49**	**64.47**	**73.24**	**12.82**
C0235-047-1000-M	**0.235**	**5.97**	**0.047**	**1.19**	**1.000**	**25.40**	**0.768**	**19.50**	**0.763**	**19.38**	**18.21**	**81.00**	**78.41**	**13.72**	**C0235-047-1000-S**	**0.787**	**20.00**	**14.49**	**64.47**	**68.18**	**11.93**
C0235-047-1125-M	**0.235**	**5.97**	**0.047**	**1.19**	**1.125**	**28.58**	**0.861**	**21.86**	**0.855**	**21.71**	**18.21**	**81.00**	**68.90**	**12.06**	**C0235-047-1125-S**	**0.883**	**22.43**	**14.49**	**64.47**	**59.92**	**10.49**
C0235-047-1250-M	**0.235**	**5.97**	**0.047**	**1.19**	**1.250**	**31.75**	**0.954**	**24.22**	**0.946**	**24.04**	**18.21**	**81.00**	**61.45**	**10.75**	**C0235-047-1250-S**	**0.979**	**24.86**	**14.49**	**64.47**	**53.44**	**9.35**
C0235-047-1375-M	**0.235**	**5.97**	**0.047**	**1.19**	**1.375**	**34.93**	**1.047**	**26.58**	**1.038**	**26.37**	**18.21**	**81.00**	**55.46**	**9.70**	**C0235-047-1375-S**	**1.074**	**27.29**	**14.49**	**64.47**	**48.22**	**8.44**
C0235-047-1500-M	**0.235**	**5.97**	**0.047**	**1.19**	**1.500**	**38.10**	**1.140**	**28.95**	**1.130**	**28.70**	**18.21**	**81.00**	**50.53**	**8.84**	**C0235-047-1500-S**	**1.170**	**29.72**	**14.49**	**64.47**	**43.94**	**7.69**
C0235-047-1625-M	**0.235**	**5.97**	**0.047**	**1.19**	**1.625**	**41.28**	**1.233**	**31.31**	**1.221**	**31.02**	**18.21**	**81.00**	**46.40**	**8.12**	**C0235-047-1625-S**	**1.266**	**32.15**	**14.49**	**64.47**	**40.35**	**7.06**
C0235-047-1750-M	**0.235**	**5.97**	**0.047**	**1.19**	**1.750**	**44.45**	**1.326**	**33.67**	**1.313**	**33.35**	**18.21**	**81.00**	**42.90**	**7.51**	**C0235-047-1750-S**	**1.361**	**34.58**	**14.49**	**64.47**	**37.30**	**6.53**
C0235-047-1875-M	**0.235**	**5.97**	**0.047**	**1.19**	**1.875**	**47.63**	**1.418**	**36.03**	**1.405**	**35.68**	**18.21**	**81.00**	**39.89**	**6.98**	**C0235-047-1875-S**	**1.457**	**37.01**	**14.49**	**64.47**	**34.69**	**6.07**
C0235-047-2000-M	**0.235**	**5.97**	**0.047**	**1.19**	**2.000**	**50.80**	**1.511**	**38.39**	**1.496**	**38.01**	**18.21**	**81.00**	**37.27**	**6.52**	**C0235-047-2000-S**	**1.553**	**39.44**	**14.49**	**64.47**	**32.41**	**5.67**
C0235-047-2125-M	**0.235**	**5.97**	**0.047**	**1.19**	**2.125**	**53.98**	**1.604**	**40.75**	**1.588**	**40.34**	**18.21**	**81.00**	**34.98**	**6.12**	**C0235-047-2125-S**	**1.649**	**41.87**	**14.49**	**64.47**	**30.42**	**5.32**
C0235-047-2250-M	**0.235**	**5.97**	**0.047**	**1.19**	**2.250**	**57.15**	**1.697**	**43.11**	**1.680**	**42.67**	**18.21**	**81.00**	**32.95**	**5.77**	**C0235-047-2250-S**	**1.744**	**44.30**	**14.49**	**64.47**	**28.65**	**5.01**
C0235-047-2375-M	**0.235**	**5.97**	**0.047**	**1.19**	**2.375**	**60.33**	**1.790**	**45.47**	**1.771**	**45.00**	**18.21**	**81.00**	**31.14**	**5.45**	**C0235-047-2375-S**	**1.840**	**46.73**	**14.49**	**64.47**	**27.08**	**4.74**
C0235-047-2500-M	**0.235**	**5.97**	**0.047**	**1.19**	**2.500**	**63.50**	**1.883**	**47.83**	**1.863**	**47.32**	**18.21**	**81.00**	**29.53**	**5.17**	**C0235-047-2500-S**	**1.936**	**49.16**	**14.49**	**64.47**	**25.68**	**4.49**
C0235-047-2625-M	**0.235**	**5.97**	**0.047**	**1.19**	**2.625**	**66.68**	**1.976**	**50.20**	**1.955**	**49.65**	**18.21**	**81.00**	**28.07**	**4.91**	**C0235-047-2625-S**	**2.031**	**51.59**	**14.49**	**64.47**	**24.41**	**4.27**
C0235-047-2750-M	**0.235**	**5.97**	**0.047**	**1.19**	**2.750**	**69.85**	**2.069**	**52.56**	**2.046**	**51.98**	**18.21**	**81.00**	**26.75**	**4.68**	**C0235-047-2750-S**	**2.127**	**54.02**	**14.49**	**64.47**	**23.26**	**4.07**
C0235-047-2875-M	**0.235**	**5.97**	**0.047**	**1.19**	**2.875**	**73.03**	**2.162**	**54.92**	**2.138**	**54.31**	**18.21**	**81.00**	**25.55**	**4.47**	**C0235-047-2875-S**	**2.223**	**56.45**	**14.49**	**64.47**	**22.21**	**3.89**
C0235-047-3000-M	**0.235**	**5.97**	**0.047**	**1.19**	**3.000**	**76.20**	**2.255**	**57.28**	**2.230**	**56.64**	**18.21**	**81.00**	**24.45**	**4.28**	**C0235-047-3000-S**	**2.318**	**58.88**	**14.49**	**64.47**	**21.26**	**3.72**
C0235-047-3250-M	**0.235**	**5.97**	**0.047**	**1.19**	**3.250**	**82.55**	**2.441**	**62.00**	**2.413**	**61.29**	**18.21**	**81.00**	**22.51**	**3.94**	**C0235-047-3250-S**	**2.510**	**63.74**	**14.49**	**64.47**	**19.57**	**3.43**
C0235-047-3500-M	**0.235**	**5.97**	**0.047**	**1.19**	**3.500**	**88.90**	**2.627**	**66.72**	**2.596**	**65.95**	**18.21**	**81.00**	**20.86**	**3.65**	**C0235-047-3500-S**	**2.701**	**68.60**	**14.49**	**64.47**	**18.14**	**3.17**
C0235-047-3750-M	**0.235**	**5.97**	**0.047**	**1.19**	**3.750**	**95.25**	**2.813**	**71.45**	**2.780**	**70.61**	**18.21**	**81.00**	**19.43**	**3.40**	**C0235-047-3750-S**	**2.892**	**73.46**	**14.49**	**64.47**	**16.90**	**2.96**
D11850	0.236	6.00	0.039	1.00	0.335	8.50	0.260	6.60	0.217	5.50	9.83	43.74	132.80	23.24	D21850	0.260	6.60	8.19	36.44	110.63	19.36
D11860	0.236	6.00	0.039	1.00	0.472	12.00	0.354	9.00	0.295	7.50	9.83	43.74	84.63	14.81	D21860	0.354	9.00	8.19	36.44	70.51	12.34
D11870	0.236	6.00	0.039	1.00	0.669	17.00	0.496	12.60	0.413	10.50	9.83	43.74	54.69	9.57	D21870	0.496	12.60	8.19	36.44	45.54	7.97
D11880	0.236	6.00	0.039	1.00	0.945	24.00	0.685	17.40	0.571	14.50	9.83	43.74	37.20	6.51	D21880	0.685	17.40	8.19	36.44	30.97	5.42
D11890	0.236	6.00	0.039	1.00	1.358	34.50	0.969	24.60	0.807	20.50	9.83	43.74	25.14	4.40	D21890	0.969	24.60	8.19	36.44	20.97	3.67
C0240-016-0250-M*	0.240	6.10	0.016	0.41	0.250	6.35	0.102	2.59	0.070	1.78	0.92	4.09	6.20	1.09	C0240-016-0250-S*	0.134	3.41	0.60	2.66	5.17	0.90

Part Numbers with an "*" are squared and not ground. **Part Numbers in bold** represent the newly expanded Associated Spring RAYMOND compression spring offering.

MUSIC WIRE

Catalog #	Outside Diameter (OD)		Wire Diameter (d)		Free Length (L) Approx		Load Length (L_1)		Solid Height (Sh) Approx		Load (P) at L_1		Spring Rate (R)	
	in	mm	in	mm	in	mm	in	mm	in	mm	lb	N	lb/in	N/mm
C0240-016-0310-M*	0.240	6.10	0.016	0.41	0.310	7.87	0.119	3.02	0.076	1.93	0.92	4.09	4.80	0.84
C0240-016-0380-M*	0.240	6.10	0.016	0.41	0.380	9.65	0.144	3.66	0.083	2.11	0.92	4.09	3.90	0.68
C0240-016-0440-M*	0.240	6.10	0.016	0.41	0.440	11.18	0.160	4.06	0.089	2.26	0.92	4.09	3.30	0.58
C0240-016-0500-M*	0.240	6.10	0.016	0.41	0.500	12.70	0.183	4.65	0.095	2.41	0.92	4.09	2.90	0.51
C0240-016-0560-M*	0.240	6.10	0.016	0.41	0.560	14.22	0.192	4.88	0.101	2.57	0.92	4.09	2.50	0.44
C0240-016-0620-M*	0.240	6.10	0.016	0.41	0.620	15.75	0.217	5.51	0.107	2.72	0.92	4.09	2.30	0.40
C0240-016-0690-M*	0.240	6.10	0.016	0.41	0.690	17.53	0.230	5.84	0.114	2.90	0.92	4.09	2.00	0.35
C0240-016-0750-M*	0.240	6.10	0.016	0.41	0.750	19.05	0.266	6.76	0.120	3.05	0.92	4.09	1.90	0.33
C0240-016-0810-M*	0.240	6.10	0.016	0.41	0.810	20.57	0.269	6.83	0.126	3.20	0.92	4.09	1.70	0.30
C0240-016-0880-M*	0.240	6.10	0.016	0.41	0.880	22.35	0.305	7.75	0.133	3.38	0.92	4.09	1.60	0.28
C0240-016-0938-M*	**0.240**	**6.10**	**0.016**	**0.41**	**0.938**	**23.83**	**0.302**	**7.68**	**0.145**	**3.68**	**0.95**	**4.21**	**1.49**	**0.26**
C0240-016-1000-M*	0.240	6.10	0.016	0.41	1.000	25.40	0.343	8.71	0.145	3.68	0.92	4.09	1.40	0.25
C0240-016-1250-M*	0.240	6.10	0.016	0.41	1.250	31.75	0.415	10.54	0.170	4.32	0.92	4.09	1.10	0.19
C0240-016-1500-M*	0.240	6.10	0.016	0.41	1.500	38.10	0.478	12.14	0.195	4.95	0.92	4.09	0.90	0.16
C0240-016-1750-M*	0.240	6.10	0.016	0.41	1.750	44.45	0.600	15.24	0.220	5.59	0.92	4.09	0.80	0.14
C0240-016-2000-M*	0.240	6.10	0.016	0.41	2.000	50.80	0.686	17.42	0.245	6.22	0.92	4.09	0.70	0.12
C0240-018-0250-M*	0.240	6.10	0.018	0.46	0.250	6.35	0.115	2.92	0.080	2.03	1.28	5.69	9.50	1.66
C0240-018-0310-M*	0.240	6.10	0.018	0.46	0.310	7.87	0.137	3.48	0.088	2.24	1.28	5.69	7.40	1.30
C0240-018-0380-M*	0.240	6.10	0.018	0.46	0.380	9.65	0.162	4.11	0.096	2.44	1.28	5.69	5.90	1.03
C0240-018-0440-M*	0.240	6.10	0.018	0.46	0.440	11.18	0.184	4.67	0.103	2.62	1.28	5.69	5.00	0.88
C0240-018-0500-M*	0.240	6.10	0.018	0.46	0.500	12.70	0.209	5.31	0.111	2.82	1.28	5.69	4.40	0.77
C0240-018-0560-M*	0.240	6.10	0.018	0.46	0.560	14.22	0.232	5.89	0.118	3.00	1.28	5.69	3.90	0.68
C0240-018-0620-M*	0.240	6.10	0.018	0.46	0.620	15.75	0.251	6.38	0.126	3.20	1.28	5.69	3.50	0.61
C0240-018-0690-M*	0.240	6.10	0.018	0.46	0.690	17.53	0.276	7.01	0.134	3.40	1.28	5.69	3.10	0.54
C0240-018-0750-M*	0.240	6.10	0.018	0.46	0.750	19.05	0.293	7.44	0.141	3.58	1.28	5.69	2.80	0.49
C0240-018-0810-M*	0.240	6.10	0.018	0.46	0.810	20.57	0.320	8.13	0.149	3.78	1.28	5.69	2.60	0.46
C0240-018-0880-M*	0.240	6.10	0.018	0.46	0.880	22.35	0.346	8.79	0.157	3.99	1.28	5.69	2.40	0.42
C0240-018-1000-M*	0.240	6.10	0.018	0.46	1.000	25.40	0.390	9.91	0.172	4.37	1.28	5.69	2.10	0.37
C0240-018-1250-M*	0.240	6.10	0.018	0.46	1.250	31.75	0.497	12.62	0.203	5.16	1.28	5.69	1.70	0.30
C0240-018-1500-M*	0.240	6.10	0.018	0.46	1.500	38.10	0.586	14.88	0.233	5.92	1.28	5.69	1.40	0.25
C0240-018-1750-M*	0.240	6.10	0.018	0.46	1.750	44.45	0.683	17.35	0.264	6.71	1.28	5.69	1.20	0.21
C0240-018-2000-M*	0.240	6.10	0.018	0.46	2.000	50.80	0.720	18.29	0.294	7.47	1.28	5.69	1.00	0.18
C0240-020-0250-M*	0.240	6.10	0.020	0.51	0.250	6.35	0.126	3.20	0.091	2.31	1.75	7.78	14.10	2.47
C0240-020-0310-M*	0.240	6.10	0.020	0.51	0.310	7.87	0.151	3.84	0.099	2.51	1.75	7.78	11.00	1.93
C0240-020-0380-M*	0.240	6.10	0.020	0.51	0.380	9.65	0.180	4.57	0.110	2.79	1.75	7.78	8.70	1.52
C0240-020-0440-M*	0.240	6.10	0.020	0.51	0.440	11.18	0.204	5.18	0.118	3.00	1.75	7.78	7.40	1.30
C0240-020-0500-M*	0.240	6.10	0.020	0.51	0.500	12.70	0.229	5.82	0.127	3.23	1.75	7.78	6.40	1.12
C0240-020-0560-M*	0.240	6.10	0.020	0.51	0.560	14.22	0.254	6.45	0.136	3.45	1.75	7.78	5.70	1.00
C0240-020-0620-M*	0.240	6.10	0.020	0.51	0.620	15.75	0.278	7.06	0.145	3.68	1.75	7.78	5.10	0.89
C0240-020-0690-M*	0.240	6.10	0.020	0.51	0.690	17.53	0.307	7.80	0.155	3.94	1.75	7.78	4.60	0.81
C0240-020-0750-M*	0.240	6.10	0.020	0.51	0.750	19.05	0.332	8.43	0.164	4.17	1.75	7.78	4.20	0.74
C0240-020-0810-M*	0.240	6.10	0.020	0.51	0.810	20.57	0.349	8.86	0.172	4.37	1.75	7.78	3.80	0.67
C0240-020-0880-M*	0.240	6.10	0.020	0.51	0.880	22.35	0.380	9.65	0.182	4.62	1.75	7.78	3.50	0.61
C0240-020-1000-M*	0.240	6.10	0.020	0.51	1.000	25.40	0.434	11.02	0.200	5.08	1.75	7.78	3.10	0.54
C0240-020-1250-M*	0.240	6.10	0.020	0.51	1.250	31.75	0.521	13.23	0.236	5.99	1.75	7.78	2.40	0.42
C0240-020-1500-M*	0.240	6.10	0.020	0.51	1.500	38.10	0.625	15.88	0.273	6.93	1.75	7.78	2.00	0.35
C0240-020-1750-M*	0.240	6.10	0.020	0.51	1.750	44.45	0.721	18.31	0.309	7.85	1.75	7.78	1.70	0.30
C0240-020-2000-M*	0.240	6.10	0.020	0.51	2.000	50.80	0.833	21.16	0.346	8.79	1.75	7.78	1.50	0.26
C0240-022-0250-M	0.240	6.10	0.022	0.56	0.250	6.35	0.127	3.23	0.103	2.62	2.39	10.63	19.50	3.41
C0240-022-0310-M	0.240	6.10	0.022	0.56	0.310	7.87	0.152	3.86	0.113	2.87	2.39	10.63	15.10	2.64
C0240-022-0380-M	0.240	6.10	0.022	0.56	0.380	9.65	0.186	4.72	0.115	2.92	2.39	10.63	12.30	2.15
C0240-022-0440-M	0.240	6.10	0.022	0.56	0.440	11.18	0.193	4.90	0.131	3.33	2.39	10.63	9.70	1.70
C0240-022-0500-M	0.240	6.10	0.022	0.56	0.500	12.70	0.218	5.54	0.142	3.61	2.39	10.63	8.50	1.49
C0240-022-0560-M	0.240	6.10	0.022	0.56	0.560	14.22	0.242	6.15	0.154	3.91	2.39	10.63	7.50	1.31
C0240-022-0620-M	0.240	6.10	0.022	0.56	0.620	15.75	0.267	6.78	0.164	4.17	2.39	10.63	6.80	1.19
C0240-022-0690-M	0.240	6.10	0.022	0.56	0.690	17.53	0.302	7.67	0.175	4.45	2.39	10.63	6.20	1.09
C0240-022-0750-M	0.240	6.10	0.022	0.56	0.750	19.05	0.327	8.31	0.188	4.78	2.39	10.63	5.60	0.98
C0240-022-0810-M	0.240	6.10	0.022	0.56	0.810	20.57	0.352	8.94	0.198	5.03	2.39	10.63	5.20	0.91
C0240-022-1000-M	0.240	6.10	0.022	0.56	1.000	25.40	0.431	10.95	0.236	5.99	2.39	10.63	4.20	0.74
C0240-022-1250-M	0.240	6.10	0.022	0.56	1.250	31.75	0.526	13.36	0.280	7.11	2.39	10.63	3.30	0.58
C0240-022-1500-M	0.240	6.10	0.022	0.56	1.500	38.10	0.646	16.41	0.325	8.26	2.39	10.63	2.80	0.49
C0240-022-1750-M	0.240	6.10	0.022	0.56	1.750	44.45	0.754	19.15	0.369	9.37	2.39	10.63	2.40	0.42
C0240-022-2000-M	0.240	6.10	0.022	0.56	2.000	50.80	0.862	21.89	0.413	10.49	2.39	10.63	2.10	0.37
C0240-024-0380-M	0.240	6.10	0.024	0.61	0.380	9.65	0.199	5.05	0.142	3.61	2.92	12.99	16.20	2.84

STAINLESS STEEL

Catalog #	Load Length (L_1)		Load (P) at L_1		Spring Rate (R)	
	in	mm	lb	N	lb/in	N/mm
C0240-016-0310-S*	0.160	4.07	0.60	2.66	4.00	0.70
C0240-016-0380-S*	0.196	4.97	0.60	2.66	3.25	0.57
C0240-016-0440-S*	0.222	5.65	0.60	2.66	2.75	0.48
C0240-016-0500-S*	0.252	6.41	0.60	2.66	2.42	0.42
C0240-016-0560-S*	0.273	6.93	0.60	2.66	2.08	0.36
C0240-016-0620-S*	0.308	7.81	0.60	2.66	1.92	0.34
C0240-016-0690-S*	0.331	8.40	0.60	2.66	1.67	0.29
C0240-016-0750-S*	0.372	9.45	0.60	2.66	1.58	0.28
C0240-016-0810-S*	0.387	9.84	0.60	2.66	1.42	0.25
C0240-016-0880-S*	0.431	10.95	0.60	2.66	1.33	0.23
C0240-016-0938-S*	**0.375**	**9.53**	**0.70**	**3.11**	**1.24**	**0.22**
C0240-016-1000-S*	0.487	12.37	0.60	2.66	1.17	0.20
C0240-016-1250-S*	0.597	15.16	0.60	2.66	0.92	0.16
C0240-016-1500-S*	0.702	17.83	0.60	2.66	0.75	0.13
C0240-016-1750-S*	0.852	21.64	0.60	2.66	0.67	0.12
C0240-016-2000-S*	0.974	24.73	0.60	2.66	0.58	0.10
C0240-018-0250-S*	0.145	3.68	0.83	3.70	7.91	1.38
C0240-018-0310-S*	0.175	4.45	0.83	3.70	6.16	1.08
C0240-018-0380-S*	0.211	5.35	0.83	3.70	4.92	0.86
C0240-018-0440-S*	0.240	6.10	0.83	3.70	4.17	0.73
C0240-018-0500-S*	0.273	6.93	0.83	3.70	3.67	0.64
C0240-018-0560-S*	0.304	7.72	0.83	3.70	3.25	0.57
C0240-018-0620-S*	0.335	8.50	0.83	3.70	2.92	0.51
C0240-018-0690-S*	0.368	9.34	0.83	3.70	2.58	0.45
C0240-018-0750-S*	0.393	9.99	0.83	3.70	2.33	0.41
C0240-018-0810-S*	0.426	10.82	0.83	3.70	2.17	0.38
C0240-018-0880-S*	0.464	11.78	0.83	3.70	2.00	0.35
C0240-018-1000-S*	0.524	13.32	0.83	3.70	1.75	0.31
C0240-018-1250-S*	0.663	16.83	0.83	3.70	1.42	0.25
C0240-018-1500-S*	0.787	19.98	0.83	3.70	1.17	0.20
C0240-018-1750-S*	0.918	23.31	0.83	3.70	1.00	0.18
C0240-018-2000-S*	1.001	25.43	0.83	3.70	0.83	0.15
C0240-020-0250-S*	0.155	3.93	1.12	4.99	11.75	2.06
C0240-020-0310-S*	0.188	4.77	1.12	4.99	9.16	1.60
C0240-020-0380-S*	0.225	5.72	1.12	4.99	7.25	1.27
C0240-020-0440-S*	0.258	6.56	1.12	4.99	6.16	1.08
C0240-020-0500-S*	0.290	7.36	1.12	4.99	5.33	0.93
C0240-020-0560-S*	0.324	8.23	1.12	4.99	4.75	0.83
C0240-020-0620-S*	0.356	9.04	1.12	4.99	4.25	0.74
C0240-020-0690-S*	0.397	10.09	1.12	4.99	3.83	0.67
C0240-020-0750-S*	0.430	10.91	1.12	4.99	3.50	0.61
C0240-020-0810-S*	0.456	11.58	1.12	4.99	3.17	0.55
C0240-020-0880-S*	0.495	12.58	1.12	4.99	2.92	0.51
C0240-020-1000-S*	0.566	14.37	1.12	4.99	2.58	0.45
C0240-020-1250-S*	0.689	17.50	1.12	4.99	2.00	0.35
C0240-020-1500-S*	0.827	21.00	1.12	4.99	1.67	0.29
C0240-020-1750-S*	0.958	24.34	1.12	4.99	1.42	0.25
C0240-020-2000-S*	1.103	28.01	1.12	4.99	1.25	0.22
C0240-022-0250-S	0.160	4.06	1.47	6.52	16.24	2.84
C0240-022-0310-S	0.193	4.91	1.47	6.52	12.58	2.20
C0240-022-0380-S	0.237	6.02	1.47	6.52	10.25	1.79
C0240-022-0440-S	0.259	6.57	1.47	6.52	8.08	1.41
C0240-022-0500-S	0.293	7.44	1.47	6.52	7.08	1.24
C0240-022-0560-S	0.325	8.26	1.47	6.52	6.25	1.09
C0240-022-0620-S	0.361	9.17	1.47	6.52	5.66	0.99
C0240-022-0690-S	0.406	10.32	1.47	6.52	5.17	0.90
C0240-022-0750-S	0.436	11.07	1.47	6.52	4.67	0.82
C0240-022-0810-S	0.472	11.98	1.47	6.52	4.33	0.76
C0240-022-1000-S	0.581	14.76	1.47	6.52	3.50	0.61
C0240-022-1250-S	0.717	18.21	1.47	6.52	2.75	0.48
C0240-022-1500-S	0.872	22.14	1.47	6.52	2.33	0.41
C0240-022-1750-S	1.017	25.83	1.47	6.52	2.00	0.35
C0240-022-2000-S	1.162	29.52	1.47	6.52	1.75	0.31
C0240-024-0380-S	0.240	6.10	1.89	8.40	13.50	2.36

FOR INFORMATION ON ALTERNATIVE FINISHES, SEE PAGE 311

Part Numbers with an "*" are squared and not ground. **Part Numbers in bold** represent the newly expanded Associated Spring RAYMOND compression spring offering.

MUSIC WIRE															STAINLESS STEEL						
Catalog #	Outside Diameter (OD)		Wire Diameter (d)		Free Length (L) Approx		Load Length (L_1)		Solid Height (Sh) Approx		Load (P) at L_1		Spring Rate (R)		Catalog #	Load Length (L_1)		Load (P) at L_1		Spring Rate (R)	
	in	mm	in	mm	in	mm	in	mm	in	mm	lb	N	lb/in	N/mm		in	mm	lb	N	lb/in	N/mm
C0240-024-0440-M	0.240	6.10	0.024	0.61	0.440	11.18	0.227	5.77	0.155	3.94	2.92	12.99	13.70	2.40	C0240-024-0440-S	0.275	6.97	1.89	8.40	11.41	2.00
C0240-024-0500-M	0.240	6.10	0.024	0.61	0.500	12.70	0.254	6.45	0.168	4.27	2.92	12.99	11.90	2.08	C0240-024-0500-S	0.310	7.86	1.89	8.40	9.91	1.73
C0240-024-0560-M	0.240	6.10	0.024	0.61	0.560	14.22	0.282	7.16	0.180	4.57	2.92	12.99	10.50	1.84	C0240-024-0560-S	0.344	8.74	1.89	8.40	8.75	1.53
C0240-024-0620-M	0.240	6.10	0.024	0.61	0.620	15.75	0.309	7.85	0.193	4.90	2.92	12.99	9.40	1.65	C0240-024-0620-S	0.379	9.62	1.89	8.40	7.83	1.37
C0240-024-0690-M	0.240	6.10	0.024	0.61	0.690	17.53	0.341	8.66	0.208	5.28	2.92	12.99	8.40	1.47	C0240-024-0690-S	0.420	10.67	1.89	8.40	7.00	1.22
C0240-024-0750-M	0.240	6.10	0.024	0.61	0.750	19.05	0.368	9.35	0.221	5.61	2.92	12.99	7.60	1.33	C0240-024-0750-S	0.452	11.47	1.89	8.40	6.33	1.11
C0240-024-0810-M	0.240	6.10	0.024	0.61	0.810	20.57	0.396	10.06	0.233	5.92	2.92	12.99	7.00	1.23	C0240-024-0810-S	0.486	12.35	1.89	8.40	5.83	1.02
C0240-024-0880-M	0.240	6.10	0.024	0.61	0.880	22.35	0.427	10.85	0.248	6.30	2.92	12.99	6.40	1.12	C0240-024-0880-S	0.526	13.36	1.89	8.40	5.33	0.93
C0240-024-1000-M	0.240	6.10	0.024	0.61	1.000	25.40	0.482	12.24	0.274	6.96	2.92	12.99	5.60	0.98	C0240-024-1000-S	0.595	15.12	1.89	8.40	4.67	0.82
C0240-024-1250-M	0.240	6.10	0.024	0.61	1.250	31.75	0.596	15.14	0.327	8.31	2.92	12.99	4.50	0.79	C0240-024-1250-S	0.746	18.96	1.89	8.40	3.75	0.66
C0240-024-1500-M	0.240	6.10	0.024	0.61	1.500	38.10	0.710	18.03	0.379	9.63	2.92	12.99	3.70	0.65	C0240-024-1500-S	0.887	22.54	1.89	8.40	3.08	0.54
C0240-024-1750-M	0.240	6.10	0.024	0.61	1.750	44.45	0.838	21.29	0.432	10.97	2.92	12.99	3.20	0.56	C0240-024-1750-S	1.042	26.46	1.89	8.40	2.67	0.47
C0240-024-2000-M	0.240	6.10	0.024	0.61	2.000	50.80	0.919	23.34	0.485	12.32	2.92	12.99	2.70	0.47	C0240-024-2000-S	1.161	29.48	1.89	8.40	2.25	0.39
C0240-026-0310-M	0.240	6.10	0.026	0.66	0.310	7.87	0.176	4.47	0.138	3.51	3.85	17.13	28.70	5.02	C0240-026-0310-S	0.211	5.35	2.37	10.56	23.91	4.18
C0240-026-0380-M	0.240	6.10	0.026	0.66	0.380	9.65	0.215	5.46	0.143	3.63	3.85	17.13	23.30	4.08	C0240-026-0380-S	0.258	6.55	2.37	10.56	19.41	3.40
C0240-026-0440-M	0.240	6.10	0.026	0.66	0.440	11.18	0.247	6.27	0.156	3.96	3.85	17.13	19.90	3.48	C0240-026-0440-S	0.297	7.54	2.37	10.56	16.58	2.90
C0240-026-0500-M	0.240	6.10	0.026	0.66	0.500	12.70	0.279	7.09	0.169	4.29	3.85	17.13	17.40	3.05	C0240-026-0500-S	0.336	8.54	2.37	10.56	14.49	2.54
C0240-026-0560-M	0.240	6.10	0.026	0.66	0.560	14.22	0.298	7.57	0.188	4.78	3.85	17.13	14.70	2.57	C0240-026-0560-S	0.366	9.30	2.37	10.56	12.25	2.14
C0240-026-0620-M	0.240	6.10	0.026	0.66	0.620	15.75	0.317	8.05	0.208	5.28	3.85	17.13	12.70	2.22	C0240-026-0620-S	0.396	10.05	2.37	10.56	10.58	1.85
C0240-026-0690-M	0.240	6.10	0.026	0.66	0.690	17.53	0.345	8.76	0.228	5.79	3.85	17.13	11.10	1.94	C0240-026-0690-S	0.433	11.01	2.37	10.56	9.25	1.62
C0240-026-0750-M	0.240	6.10	0.026	0.66	0.750	19.05	0.364	9.25	0.246	6.25	3.85	17.13	10.00	1.75	C0240-026-0750-S	0.465	11.81	2.37	10.56	8.33	1.46
C0240-026-0810-M	0.240	6.10	0.026	0.66	0.810	20.57	0.396	10.06	0.260	6.60	3.85	17.13	9.30	1.63	C0240-026-0810-S	0.504	12.79	2.37	10.56	7.75	1.36
C0240-026-0880-M	0.240	6.10	0.026	0.66	0.880	22.35	0.425	10.80	0.281	7.14	3.85	17.13	8.40	1.47	C0240-026-0880-S	0.541	13.74	2.37	10.56	7.00	1.22
C0240-026-1000-M	0.240	6.10	0.026	0.66	1.000	25.40	0.480	12.19	0.313	7.95	3.85	17.13	7.40	1.30	C0240-026-1000-S	0.615	15.62	2.37	10.56	6.16	1.08
C0240-026-1250-M	0.240	6.10	0.026	0.66	1.250	31.75	0.597	15.16	0.375	9.53	3.85	17.13	5.90	1.03	C0240-026-1250-S	0.767	19.49	2.37	10.56	4.92	0.86
C0240-026-1500-M	0.240	6.10	0.026	0.66	1.500	38.10	0.714	18.14	0.437	11.10	3.85	17.13	4.90	0.86	C0240-026-1500-S	0.919	23.33	2.37	10.56	4.08	0.71
C0240-026-1750-M	0.240	6.10	0.026	0.66	1.750	44.45	0.811	20.60	0.499	12.67	3.85	17.13	4.10	0.72	C0240-026-1750-S	1.055	26.80	2.37	10.56	3.42	0.60
C0240-026-2000-M	0.240	6.10	0.026	0.66	2.000	50.80	0.931	23.65	0.561	14.25	3.85	17.13	3.60	0.63	C0240-026-2000-S	1.209	30.70	2.37	10.56	3.00	0.52
C0240-029-0380-M	0.240	6.10	0.029	0.74	0.380	9.65	0.225	5.72	0.185	4.70	4.95	22.02	32.00	5.60	C0240-029-0380-S	0.259	6.58	3.22	14.34	26.66	4.66
C0240-029-0440-M	0.240	6.10	0.029	0.74	0.440	11.18	0.257	6.53	0.203	5.16	4.95	22.02	27.00	4.73	C0240-029-0440-S	0.297	7.54	3.22	14.34	22.49	3.94
C0240-029-0500-M	0.240	6.10	0.029	0.74	0.500	12.70	0.288	7.32	0.221	5.61	4.95	22.02	23.30	4.08	C0240-029-0500-S	0.334	8.48	3.22	14.34	19.41	3.40
C0240-029-0560-M	0.240	6.10	0.029	0.74	0.560	14.22	0.319	8.10	0.240	6.10	4.95	22.02	20.60	3.61	C0240-029-0560-S	0.372	9.45	3.22	14.34	17.16	3.00
C0240-029-0620-M	0.240	6.10	0.029	0.74	0.620	15.75	0.350	8.89	0.258	6.55	4.95	22.02	18.40	3.22	C0240-029-0620-S	0.410	10.41	3.22	14.34	15.33	2.68
C0240-029-0690-M	0.240	6.10	0.029	0.74	0.690	17.53	0.387	9.83	0.279	7.09	4.95	22.02	16.30	2.85	C0240-029-0690-S	0.453	11.50	3.22	14.34	13.58	2.38
C0240-029-0750-M	0.240	6.10	0.029	0.74	0.750	19.05	0.418	10.62	0.298	7.57	4.95	22.02	14.90	2.61	C0240-029-0750-S	0.490	12.45	3.22	14.34	12.41	2.17
C0240-029-0810-M	0.240	6.10	0.029	0.74	0.810	20.57	0.449	11.40	0.316	8.03	4.95	22.02	13.70	2.40	C0240-029-0810-S	0.528	13.40	3.22	14.34	11.41	2.00
C0240-029-0880-M	0.240	6.10	0.029	0.74	0.880	22.35	0.485	12.32	0.337	8.56	4.95	22.02	12.60	2.21	C0240-029-0880-S	0.573	14.55	3.22	14.34	10.50	1.84
C0240-029-0940-M	0.240	6.10	0.029	0.74	0.940	23.88	0.517	13.13	0.355	9.02	4.95	22.02	11.70	2.05	C0240-029-0940-S	0.609	15.48	3.22	14.34	9.75	1.71
C0240-029-1000-M	0.240	6.10	0.029	0.74	1.000	25.40	0.548	13.92	0.374	9.50	4.95	22.02	11.00	1.93	C0240-029-1000-S	0.648	16.46	3.22	14.34	9.16	1.60
C0240-029-1120-M	0.240	6.10	0.029	0.74	1.120	28.45	0.610	15.49	0.410	10.41	4.95	22.02	9.70	1.70	C0240-029-1120-S	0.721	18.32	3.22	14.34	8.08	1.41
C0240-029-1250-M	0.240	6.10	0.029	0.74	1.250	31.75	0.678	17.22	0.450	11.43	4.95	22.02	8.70	1.52	C0240-029-1250-S	0.805	20.45	3.22	14.34	7.25	1.27
C0240-029-1380-M	0.240	6.10	0.029	0.74	1.380	35.05	0.745	18.92	0.489	12.42	4.95	22.02	7.80	1.37	C0240-029-1380-S	0.884	22.45	3.22	14.34	6.50	1.14
C0240-029-1500-M	0.240	6.10	0.029	0.74	1.500	38.10	0.808	20.52	0.526	13.36	4.95	22.02	7.20	1.26	C0240-029-1500-S	0.963	24.45	3.22	14.34	6.00	1.05
C0240-029-1750-M	0.240	6.10	0.029	0.74	1.750	44.45	0.938	23.83	0.602	15.29	4.95	22.02	6.10	1.07	C0240-029-1750-S	1.116	28.34	3.22	14.34	5.08	0.89
C0240-029-2000-M	0.240	6.10	0.029	0.74	2.000	50.80	1.068	27.13	0.678	17.22	4.95	22.02	5.30	0.93	C0240-029-2000-S	1.270	32.26	3.22	14.34	4.42	0.77
C0240-032-0310-M	0.240	6.10	0.032	0.81	0.310	7.87	0.202	5.13	0.167	4.24	6.89	30.65	63.80	11.17	C0240-032-0310-S	0.230	5.84	4.25	18.91	53.15	9.30
C0240-032-0380-M	0.240	6.10	0.032	0.81	0.380	9.65	0.252	6.40	0.184	4.67	6.89	30.65	53.80	9.42	C0240-032-0380-S	0.285	7.24	4.25	18.91	44.82	7.84
C0240-032-0440-M	0.240	6.10	0.032	0.81	0.440	11.18	0.282	7.16	0.209	5.31	6.89	30.65	43.20	7.56	C0240-032-0440-S	0.322	8.17	4.25	18.91	35.99	6.30
C0240-032-0500-M	0.240	6.10	0.032	0.81	0.500	12.70	0.313	7.95	0.232	5.89	6.89	30.65	36.80	6.44	C0240-032-0500-S	0.361	9.18	4.25	18.91	30.65	5.36
C0240-032-0560-M	0.240	6.10	0.032	0.81	0.560	14.22	0.344	8.74	0.255	6.48	6.89	30.65	31.90	5.58	C0240-032-0560-S	0.400	10.16	4.25	18.91	26.57	4.65
C0240-032-0620-M	0.240	6.10	0.032	0.81	0.620	15.75	0.374	9.50	0.279	7.09	6.89	30.65	28.00	4.90	C0240-032-0620-S	0.438	11.12	4.25	18.91	23.32	4.08
C0240-032-0690-M	0.240	6.10	0.032	0.81	0.690	17.53	0.414	10.52	0.303	7.70	6.89	30.65	25.00	4.38	C0240-032-0690-S	0.486	12.34	4.25	18.91	20.83	3.64
C0240-032-0750-M	0.240	6.10	0.032	0.81	0.750	19.05	0.435	11.05	0.335	8.51	6.89	30.65	21.90	3.83	C0240-032-0750-S	0.517	13.13	4.25	18.91	18.24	3.19
C0240-032-0810-M	0.240	6.10	0.032	0.81	0.810	20.57	0.466	11.84	0.359	9.12	6.89	30.65	20.00	3.50	C0240-032-0810-S	0.555	14.09	4.25	18.91	16.66	2.92
C0240-032-0880-M	0.240	6.10	0.032	0.81	0.880	22.35	0.506	12.85	0.384	9.75	6.89	30.65	18.40	3.22	C0240-032-0880-S	0.603	15.31	4.25	18.91	15.33	2.68
C0240-032-0940-M	0.240	6.10	0.032	0.81	0.940	23.88	0.537	13.64	0.407	10.34	6.89	30.65	17.10	2.99	C0240-032-0940-S	0.642	16.29	4.25	18.91	14.24	2.49
C0240-032-1000-M	0.240	6.10	0.032	0.81	1.000	25.40	0.567	14.40	0.431	10.95	6.89	30.65	15.90	2.78	C0240-032-1000-S	0.679	17.25	4.25	18.91	13.25	2.32
C0240-032-1250-M	0.240	6.10	0.032	0.81	1.250	31.75	0.699	17.75	0.526	13.36	6.89	30.65	12.50	2.19	C0240-032-1250-S	0.842	21.38	4.25	18.91	10.41	1.82
C0240-032-1380-M	0.240	6.10	0.032	0.81	1.380	35.05	0.765	19.43	0.573	14.55	6.89	30.65	11.20	1.96	C0240-032-1380-S	0.924	23.48	4.25	18.91	9.33	1.63
C0240-032-1500-M	0.240	6.10	0.032	0.81	1.500	38.10	0.831	21.11	0.616	15.65	6.89	30.65	10.30	1.80	C0240-032-1500-S	1.004	25.51	4.25	18.91	8.58	1.50
C0240-032-1750-M	0.240	6.10	0.032	0.81	1.750	44.45	0.967	24.56	0.707	17.96	6.89	30.65	8.80	1.54	C0240-032-1750-S	1.170	29.72	4.25	18.91	7.33	1.28
C0240-032-2000-M	0.240	6.10	0.032	0.81	2.000	50.80	1.093	27.76	0.797	20.24	6.89	30.65	7.60	1.33	C0240-032-2000-S	1.328	33.74	4.25	18.91	6.33	1.11
C0240-035-0310-M	0.240	6.10	0.035	0.89	0.310	7.87	0.214	5.44	0.206	5.23	8.34	37.10	86.90	15.21	C0240-035-0310-S	0.234	5.95	5.48	24.37	72.39	12.67
C0240-035-0380-M	0.240	6.10	0.035	0.89	0.380	9.65	0.256	6.50	0.235	5.97	8.34	37.10	67.30	11.78	C0240-035-0380-S	0.282	7.17	5.48	24.37	56.06	9.81

Part Numbers with an "*" are squared and not ground. **Part Numbers in bold** represent the newly expanded Associated Spring RAYMOND compression spring offering.

MUSIC WIRE															STAINLESS STEEL						
Catalog #	Outside Diameter (OD)		Wire Diameter (d)		Free Length (L) Approx		Load Length (L_1)		Solid Height (Sh) Approx		Load (P) at L_1		Spring Rate (R)		Catalog #	Load Length (L_1)		Load (P) at L_1		Spring Rate (R)	
	in	mm	in	mm	in	mm	in	mm	in	mm	lb	N	lb/in	N/mm		in	mm	lb	N	lb/in	N/mm
C0240-035-0440-M	0.240	6.10	0.035	0.89	0.440	11.18	0.292	7.42	0.260	6.60	8.34	37.10	56.40	9.87	C0240-035-0440-S	0.323	8.21	5.48	24.37	46.98	8.22
C0240-035-0500-M	0.240	6.10	0.035	0.89	0.500	12.70	0.328	8.33	0.286	7.26	8.34	37.10	48.50	8.49	C0240-035-0500-S	0.364	9.26	5.48	24.37	40.40	7.07
C0240-035-0560-M	0.240	6.10	0.035	0.89	0.560	14.22	0.364	9.25	0.311	7.90	8.34	37.10	42.60	7.46	C0240-035-0560-S	0.406	10.30	5.48	24.37	35.49	6.21
C0240-035-0620-M	0.240	6.10	0.035	0.89	0.620	15.75	0.400	10.16	0.336	8.53	8.34	37.10	37.90	6.63	C0240-035-0620-S	0.446	11.34	5.48	24.37	31.57	5.52
C0240-035-0690-M	0.240	6.10	0.035	0.89	0.690	17.53	0.442	11.23	0.366	9.30	8.34	37.10	33.60	5.88	C0240-035-0690-S	0.494	12.55	5.48	24.37	27.99	4.90
C0240-035-0750-M	0.240	6.10	0.035	0.89	0.750	19.05	0.478	12.14	0.391	9.93	8.34	37.10	30.70	5.37	C0240-035-0750-S	0.536	13.61	5.48	24.37	25.57	4.48
C0240-035-0810-M	0.240	6.10	0.035	0.89	0.810	20.57	0.514	13.06	0.416	10.57	8.34	37.10	28.20	4.94	C0240-035-0810-S	0.577	14.65	5.48	24.37	23.49	4.11
C0240-035-0880-M	0.240	6.10	0.035	0.89	0.880	22.35	0.556	14.12	0.445	11.30	8.34	37.10	25.70	4.50	C0240-035-0880-S	0.624	15.85	5.48	24.37	21.41	3.75
C0240-035-0940-M	0.240	6.10	0.035	0.89	0.940	23.88	0.592	15.04	0.471	11.96	8.34	37.10	24.00	4.20	C0240-035-0940-S	0.666	16.92	5.48	24.37	19.99	3.50
C0240-035-1000-M	0.240	6.10	0.035	0.89	1.000	25.40	0.628	15.95	0.496	12.60	8.34	37.10	22.40	3.92	C0240-035-1000-S	0.706	17.94	5.48	24.37	18.66	3.27
C0240-035-1250-M	0.240	6.10	0.035	0.89	1.250	31.75	0.778	19.76	0.601	15.27	8.34	37.10	17.70	3.10	C0240-035-1250-S	0.878	22.31	5.48	24.37	14.74	2.58
C0240-035-1380-M	0.240	6.10	0.035	0.89	1.380	35.05	0.856	21.74	0.656	16.66	8.34	37.10	15.90	2.78	C0240-035-1380-S	0.966	24.55	5.48	24.37	13.25	2.32
C0240-035-1500-M	0.240	6.10	0.035	0.89	1.500	38.10	0.928	23.57	0.706	17.93	8.34	37.10	14.60	2.56	C0240-035-1500-S	1.050	26.66	5.48	24.37	12.16	2.13
C0240-035-1750-M	0.240	6.10	0.035	0.89	1.750	44.45	1.078	27.38	0.811	20.60	8.34	37.10	12.40	2.17	C0240-035-1750-S	1.220	30.98	5.48	24.37	10.33	1.81
C0240-035-2000-M	0.240	6.10	0.035	0.89	2.000	50.80	1.228	31.19	0.916	23.27	8.34	37.10	10.80	1.89	C0240-035-2000-S	1.391	35.33	5.48	24.37	9.00	1.57
C0240-035-2250-M	0.240	6.10	0.035	0.89	2.250	57.15	1.378	35.00	1.021	25.93	8.34	37.10	9.60	1.68	C0240-035-2250-S	1.565	39.75	5.48	24.37	8.00	1.40
C0240-035-2500-M	0.240	6.10	0.035	0.89	2.500	63.50	1.528	38.81	1.126	28.60	8.34	37.10	8.60	1.51	C0240-035-2500-S	1.735	44.08	5.48	24.37	7.16	1.25
C0240-038-0310-M	0.240	6.10	0.038	0.97	0.310	7.87	0.223	5.66	0.208	5.28	11.06	49.20	127.10	22.24	C0240-038-0310-S	0.246	6.24	6.82	30.36	105.87	18.53
C0240-038-0380-M	0.240	6.10	0.038	0.97	0.380	9.65	0.271	6.88	0.237	6.02	11.06	49.20	101.50	17.76	C0240-038-0380-S	0.299	7.60	6.82	30.36	84.55	14.80
C0240-038-0440-M	0.240	6.10	0.038	0.97	0.440	11.18	0.309	7.85	0.265	6.73	11.06	49.20	84.40	14.77	C0240-038-0440-S	0.343	8.71	6.82	30.36	70.31	12.30
C0240-038-0500-M	0.240	6.10	0.038	0.97	0.500	12.70	0.347	8.81	0.294	7.47	11.06	49.20	72.30	12.65	C0240-038-0500-S	0.387	9.82	6.82	30.36	60.23	10.54
C0240-038-0560-M	0.240	6.10	0.038	0.97	0.560	14.22	0.385	9.78	0.323	8.20	11.06	49.20	63.20	11.06	C0240-038-0560-S	0.430	10.93	6.82	30.36	52.65	9.21
C0240-038-0620-M	0.240	6.10	0.038	0.97	0.620	15.75	0.424	10.77	0.350	8.89	11.06	49.20	56.40	9.87	C0240-038-0620-S	0.475	12.06	6.82	30.36	46.98	8.22
C0240-038-0690-M	0.240	6.10	0.038	0.97	0.690	17.53	0.472	11.99	0.379	9.63	11.06	49.20	50.70	8.87	C0240-038-0690-S	0.528	13.42	6.82	30.36	42.23	7.39
C0240-038-0750-M	0.240	6.10	0.038	0.97	0.750	19.05	0.510	12.95	0.407	10.34	11.06	49.20	46.10	8.07	C0240-038-0750-S	0.572	14.54	6.82	30.36	38.40	6.72
C0240-038-0810-M	0.240	6.10	0.038	0.97	0.810	20.57	0.548	13.92	0.436	11.07	11.06	49.20	42.20	7.39	C0240-038-0810-S	0.616	15.64	6.82	30.36	35.15	6.15
C0240-038-0880-M	0.240	6.10	0.038	0.97	0.880	22.35	0.589	14.96	0.474	12.04	11.06	49.20	38.00	6.65	C0240-038-0880-S	0.664	16.88	6.82	30.36	31.65	5.54
C0240-038-0940-M	0.240	6.10	0.038	0.97	0.940	23.88	0.620	15.75	0.511	12.98	11.06	49.20	34.60	6.06	C0240-038-0940-S	0.703	17.86	6.82	30.36	28.82	5.04
C0240-038-1000-M	0.240	6.10	0.038	0.97	1.000	25.40	0.658	16.71	0.541	13.74	11.06	49.20	32.30	5.65	C0240-038-1000-S	0.746	18.96	6.82	30.36	26.91	4.71
C0240-038-1120-M	0.240	6.10	0.038	0.97	1.120	28.45	0.735	18.67	0.597	15.16	11.06	49.20	28.70	5.02	C0240-038-1120-S	0.835	21.20	6.82	30.36	23.91	4.18
C0240-038-1250-M	0.240	6.10	0.038	0.97	1.250	31.75	0.821	20.85	0.653	16.59	11.06	49.20	25.80	4.52	C0240-038-1250-S	0.932	23.68	6.82	30.36	21.49	3.76
C0240-038-1380-M	0.240	6.10	0.038	0.97	1.380	35.05	0.907	23.04	0.711	18.06	11.06	49.20	23.40	4.10	C0240-038-1380-S	1.030	26.16	6.82	30.36	19.49	3.41
C0240-038-1500-M	0.240	6.10	0.038	0.97	1.500	38.10	0.984	24.99	0.768	19.51	11.06	49.20	21.40	3.75	C0240-038-1500-S	1.117	28.38	6.82	30.36	17.83	3.12
C0240-038-1750-M	0.240	6.10	0.038	0.97	1.750	44.45	1.111	28.22	0.912	23.16	11.06	49.20	17.30	3.03	C0240-038-1750-S	1.276	32.42	6.82	30.36	14.41	2.52
C0240-038-2000-M	0.240	6.10	0.038	0.97	2.000	50.80	1.268	32.21	1.032	26.21	11.06	49.20	15.10	2.64	C0240-038-2000-S	1.457	37.02	6.82	30.36	12.58	2.20
C0240-038-2250-M	0.240	6.10	0.038	0.97	2.250	57.15	1.418	36.02	1.151	29.24	11.06	49.20	13.30	2.33	C0240-038-2250-S	1.634	41.50	6.82	30.36	11.08	1.94
C0240-038-2500-M	0.240	6.10	0.038	0.97	2.500	63.50	1.578	40.08	1.270	32.26	11.06	49.20	12.00	2.10	C0240-038-2500-S	1.817	46.16	6.82	30.36	10.00	1.75
C0240-040-0310-M	0.240	6.10	0.040	1.02	0.310	7.87	0.233	5.92	0.220	5.59	12.03	53.51	155.80	27.27	C0240-040-0310-S	0.249	6.33	7.91	35.19	129.78	22.71
C0240-040-0380-M	0.240	6.10	0.040	1.02	0.380	9.65	0.279	7.09	0.274	6.96	12.03	53.51	119.40	20.90	C0240-040-0380-S	0.300	7.63	7.91	35.19	99.46	17.41
C0240-040-0440-M	0.240	6.10	0.040	1.02	0.440	11.18	0.319	8.10	0.305	7.75	12.03	53.51	99.50	17.41	C0240-040-0440-S	0.345	8.75	7.91	35.19	82.88	14.50
C0240-040-0500-M	0.240	6.10	0.040	1.02	0.500	12.70	0.359	9.12	0.336	8.53	12.03	53.51	85.30	14.93	C0240-040-0500-S	0.389	9.87	7.91	35.19	71.06	12.43
C0240-040-0560-M	0.240	6.10	0.040	1.02	0.560	14.22	0.399	10.13	0.366	9.30	12.03	53.51	74.70	13.07	C0240-040-0560-S	0.433	10.99	7.91	35.19	62.23	10.89
C0240-040-0620-M	0.240	6.10	0.040	1.02	0.620	15.75	0.439	11.15	0.397	10.08	12.03	53.51	66.40	11.62	C0240-040-0620-S	0.477	12.12	7.91	35.19	55.31	9.68
C0240-040-0690-M	0.240	6.10	0.040	1.02	0.690	17.53	0.485	12.32	0.433	11.00	12.03	53.51	58.70	10.27	C0240-040-0690-S	0.528	13.42	7.91	35.19	48.90	8.56
C0240-040-0750-M	0.240	6.10	0.040	1.02	0.750	19.05	0.525	13.34	0.464	11.79	12.03	53.51	53.50	9.36	C0240-040-0750-S	0.572	14.54	7.91	35.19	44.57	7.80
C0240-040-0810-M	0.240	6.10	0.040	1.02	0.810	20.57	0.565	14.35	0.495	12.57	12.03	53.51	49.10	8.59	C0240-040-0810-S	0.617	15.66	7.91	35.19	40.90	7.16
C0240-040-0880-M	0.240	6.10	0.040	1.02	0.880	22.35	0.611	15.52	0.531	13.49	12.03	53.51	44.80	7.84	C0240-040-0880-S	0.668	16.97	7.91	35.19	37.32	6.53
C0240-040-0940-M	0.240	6.10	0.040	1.02	0.940	23.88	0.651	16.54	0.562	14.27	12.03	53.51	41.70	7.30	C0240-040-0940-S	0.712	18.09	7.91	35.19	34.74	6.08
C0240-040-1000-M	0.240	6.10	0.040	1.02	1.000	25.40	0.691	17.55	0.592	15.04	12.03	53.51	39.00	6.83	C0240-040-1000-S	0.756	19.21	7.91	35.19	32.49	5.69
C0240-040-1120-M	0.240	6.10	0.040	1.02	1.120	28.45	0.771	19.58	0.654	16.61	12.03	53.51	34.50	6.04	C0240-040-1120-S	0.845	21.46	7.91	35.19	28.74	5.03
C0240-040-1250-M	0.240	6.10	0.040	1.02	1.250	31.75	0.857	21.77	0.721	18.31	12.03	53.51	30.60	5.36	C0240-040-1250-S	0.940	23.87	7.91	35.19	25.49	4.46
C0240-040-1380-M	0.240	6.10	0.040	1.02	1.380	35.05	0.944	23.98	0.788	20.02	12.03	53.51	27.60	4.83	C0240-040-1380-S	1.036	26.31	7.91	35.19	22.99	4.02
C0240-040-1500-M	0.240	6.10	0.040	1.02	1.500	38.10	1.023	25.98	0.849	21.56	12.03	53.51	25.20	4.41	C0240-040-1500-S	1.123	28.53	7.91	35.19	20.99	3.67
C0240-040-1750-M	0.240	6.10	0.040	1.02	1.750	44.45	1.189	30.20	0.977	24.82	12.03	53.51	21.50	3.76	C0240-040-1750-S	1.308	33.23	7.91	35.19	17.91	3.13
C0240-040-2000-M	0.240	6.10	0.040	1.02	2.000	50.80	1.355	34.42	1.106	28.09	12.03	53.51	18.70	3.27	C0240-040-2000-S	1.492	37.90	7.91	35.19	15.58	2.73
C0240-040-2250-M	0.240	6.10	0.040	1.02	2.250	57.15	1.522	38.66	1.417	35.99	12.03	53.51	16.50	2.89	C0240-040-2250-S	1.674	42.53	7.91	35.19	13.75	2.41
C0240-040-2500-M	0.240	6.10	0.040	1.02	2.500	63.50	1.688	42.88	1.363	34.62	12.03	53.51	14.80	2.59	C0240-040-2500-S	1.858	47.20	7.91	35.19	12.33	2.16
C0240-042-0380-M	0.240	6.10	0.042	1.07	0.380	9.65	0.285	7.24	0.272	6.91	14.39	64.01	151.00	26.43	C0240-042-0380-S	0.308	7.83	9.00	40.03	125.78	22.01
C0240-042-0440-M	0.240	6.10	0.042	1.07	0.440	11.18	0.323	8.20	0.310	7.87	14.39	64.01	123.00	21.53	C0240-042-0440-S	0.352	8.95	9.00	40.03	102.46	17.93
C0240-042-0500-M	0.240	6.10	0.042	1.07	0.500	12.70	0.365	9.27	0.343	8.71	14.39	64.01	106.00	18.55	C0240-042-0500-S	0.398	10.11	9.00	40.03	88.30	15.45
C0240-042-0560-M	0.240	6.10	0.042	1.07	0.560	14.22	0.407	10.34	0.373	9.47	14.39	64.01	94.00	16.45	C0240-042-0560-S	0.445	11.30	9.00	40.03	78.30	13.70
C0240-042-0620-M	0.240	6.10	0.042	1.07	0.620	15.75	0.451	11.46	0.401	10.19	14.39	64.01	85.00	14.88	C0240-042-0620-S	0.493	12.52	9.00	40.03	70.81	12.39
C0240-042-0690-M	0.240	6.10	0.042	1.07	0.690	17.53	0.498	12.65	0.441	11.20	14.39	64.01	75.00	13.13	C0240-042-0690-S	0.546	13.87	9.00	40.03	62.48	10.93
C0240-042-0750-M	0.240	6.10	0.042	1.07	0.750	19.05	0.527	13.39	0.499	12.67	14.39	64.01	64.00	11.20	C0240-042-0750-S	0.581	14.76	9.00	40.03	53.31	9.33

FOR INFORMATION ON ALTERNATIVE FINISHES, SEE PAGE 311

Part Numbers with an "*" are squared and not ground. **Part Numbers in bold** represent the newly expanded Associated Spring RAYMOND compression spring offering.

(OD) 0.240 - 0.250

MUSIC WIRE															STAINLESS STEEL						
Catalog #	Outside Diameter (OD)		Wire Diameter (d)		Free Length (L) Approx		Load Length (L_1)		Solid Height (Sh) Approx		Load (P) at L_1		Spring Rate (R)		Catalog #	Load Length (L_1)		Load (P) at L_1		Spring Rate (R)	
	in	mm	in	mm	in	mm	in	mm	in	mm	lb	N	lb/in	N/mm		in	mm	lb	N	lb/in	N/mm
C0240-042-0810-M	0.240	6.10	0.042	1.07	0.810	20.57	0.569	14.45	0.525	13.34	14.39	64.01	60.00	10.50	C0240-042-0810-S	0.630	16.00	9.00	40.03	49.98	8.75
C0240-042-0880-M	0.240	6.10	0.042	1.07	0.880	22.35	0.621	15.77	0.556	14.12	14.39	64.01	56.00	9.80	C0240-042-0880-S	0.687	17.45	9.00	40.03	46.65	8.16
C0240-042-0940-M	0.240	6.10	0.042	1.07	0.940	23.88	0.657	16.69	0.600	15.24	14.39	64.01	51.00	8.93	C0240-042-0940-S	0.728	18.50	9.00	40.03	42.48	7.43
C0240-042-1000-M	0.240	6.10	0.042	1.07	1.000	25.40	0.699	17.75	0.631	16.03	14.39	64.01	48.00	8.40	C0240-042-1000-S	0.775	19.68	9.00	40.03	39.98	7.00
C0240-042-1120-M	0.240	6.10	0.042	1.07	1.120	28.45	0.783	19.89	0.699	17.75	14.39	64.01	42.50	7.44	C0240-042-1120-S	0.866	21.99	9.00	40.03	35.40	6.20
C0240-042-1250-M	0.240	6.10	0.042	1.07	1.250	31.75	0.868	22.05	0.778	19.76	14.39	64.01	37.50	6.56	C0240-042-1250-S	0.962	24.43	9.00	40.03	31.24	5.47
C0240-042-1380-M	0.240	6.10	0.042	1.07	1.380	35.05	0.958	24.33	0.847	21.51	14.39	64.01	34.00	5.95	C0240-042-1380-S	1.062	26.98	9.00	40.03	28.32	4.96
C0240-042-1500-M	0.240	6.10	0.042	1.07	1.500	38.10	1.028	26.11	0.933	23.70	14.39	64.01	30.50	5.34	C0240-042-1500-S	1.146	29.10	9.00	40.03	25.41	4.45
C0240-042-1750-M	0.240	6.10	0.042	1.07	1.750	44.45	1.207	30.66	1.040	26.42	14.39	64.01	26.50	4.64	C0240-042-1750-S	1.342	34.10	9.00	40.03	22.08	3.86
C0240-042-2000-M	0.240	6.10	0.042	1.07	2.000	50.80	1.374	34.90	1.177	29.90	14.39	64.01	23.00	4.03	C0240-042-2000-S	1.530	38.87	9.00	40.03	19.16	3.35
C0240-042-2250-M	0.240	6.10	0.042	1.07	2.250	57.15	1.545	39.24	1.314	33.38	14.39	64.01	20.40	3.57	C0240-042-2250-S	1.720	43.70	9.00	40.03	16.99	2.97
C0240-042-2500-M	0.240	6.10	0.042	1.07	2.500	63.50	1.714	43.54	1.452	36.88	14.39	64.01	18.30	3.20	C0240-042-2500-S	1.910	48.51	9.00	40.03	15.24	2.67
C0240-045-0440-M	0.240	6.10	0.045	1.14	0.440	11.18	0.348	8.84	0.326	8.28	16.17	71.93	174.90	30.61	C0240-045-0440-S	0.366	9.30	10.75	47.83	145.69	25.50
C0240-045-0500-M	0.240	6.10	0.045	1.14	0.500	12.70	0.392	9.96	0.361	9.17	16.17	71.93	149.30	26.13	C0240-045-0500-S	0.414	10.50	10.75	47.83	124.37	21.76
C0240-045-0560-M	0.240	6.10	0.045	1.14	0.560	14.22	0.436	11.07	0.396	10.06	16.17	71.93	130.20	22.79	C0240-045-0560-S	0.461	11.71	10.75	47.83	108.46	18.98
C0240-045-0620-M	0.240	6.10	0.045	1.14	0.620	15.75	0.480	12.19	0.436	11.07	16.17	71.93	115.50	20.21	C0240-045-0620-S	0.508	12.91	10.75	47.83	96.21	16.84
C0240-045-0690-M	0.240	6.10	0.045	1.14	0.690	17.53	0.532	13.51	0.477	12.12	16.17	71.93	102.00	17.85	C0240-045-0690-S	0.563	14.31	10.75	47.83	84.97	14.87
C0240-045-0750-M	0.240	6.10	0.045	1.14	0.750	19.05	0.576	14.63	0.516	13.11	16.17	71.93	92.70	16.22	C0240-045-0750-S	0.611	15.51	10.75	47.83	77.22	13.51
C0240-045-0810-M	0.240	6.10	0.045	1.14	0.810	20.57	0.620	15.75	0.551	14.00	16.17	71.93	85.00	14.88	C0240-045-0810-S	0.658	16.72	10.75	47.83	70.81	12.39
C0240-045-0880-M	0.240	6.10	0.045	1.14	0.880	22.35	0.671	17.04	0.594	15.09	16.17	71.93	77.50	13.56	C0240-045-0880-S	0.713	18.12	10.75	47.83	64.56	11.30
C0240-045-1000-M	0.240	6.10	0.045	1.14	1.000	25.40	0.760	19.30	0.667	16.94	16.17	71.93	67.30	11.78	C0240-045-1000-S	0.808	20.53	10.75	47.83	56.06	9.81
C0240-045-1250-M	0.240	6.10	0.045	1.14	1.250	31.75	0.944	23.98	0.813	20.65	16.17	71.93	52.80	9.24	C0240-045-1250-S	1.006	25.54	10.75	47.83	43.98	7.70
C0240-045-1500-M	0.240	6.10	0.045	1.14	1.500	38.10	1.128	28.65	0.959	24.36	16.17	71.93	43.40	7.60	C0240-045-1500-S	1.203	30.54	10.75	47.83	36.15	6.33
C0240-045-1750-M	0.240	6.10	0.045	1.14	1.750	44.45	1.311	33.30	1.105	28.07	16.17	71.93	36.90	6.46	C0240-045-1750-S	1.400	35.56	10.75	47.83	30.74	5.38
C0240-045-2000-M	0.240	6.10	0.045	1.14	2.000	50.80	1.495	37.97	1.251	31.78	16.17	71.93	32.00	5.60	C0240-045-2000-S	1.597	40.55	10.75	47.83	26.66	4.66
C0240-045-2250-M	0.240	6.10	0.045	1.14	2.250	57.15	1.679	42.65	1.397	35.48	16.17	71.93	28.30	4.95	C0240-045-2250-S	1.794	45.56	10.75	47.83	23.57	4.13
C0240-045-2500-M	0.240	6.10	0.045	1.14	2.500	63.50	1.863	47.32	1.543	39.19	16.17	71.93	25.40	4.45	C0240-045-2500-S	1.992	50.59	10.75	47.83	21.16	3.70
C0250-020-0250-M*	**0.250**	**6.35**	**0.020**	**0.51**	**0.250**	**6.35**	**0.110**	**2.80**	**0.090**	**2.28**	**1.70**	**7.57**	**12.18**	**2.13**	**C0250-020-0250-S***	**0.124**	**3.16**	**1.27**	**5.67**	**10.15**	**1.78**
C0250-020-0313-M*	**0.250**	**6.35**	**0.020**	**0.51**	**0.313**	**7.95**	**0.131**	**3.31**	**0.101**	**2.56**	**1.71**	**7.61**	**9.37**	**1.64**	**C0250-020-0313-S***	**0.150**	**3.80**	**1.27**	**5.67**	**7.81**	**1.37**
C0250-020-0375-M*	**0.250**	**6.35**	**0.020**	**0.51**	**0.375**	**9.53**	**0.151**	**3.83**	**0.111**	**2.83**	**1.71**	**7.61**	**7.63**	**1.34**	**C0250-020-0375-S***	**0.175**	**4.43**	**1.27**	**5.67**	**6.36**	**1.11**
C0250-020-0438-M*	**0.250**	**6.35**	**0.020**	**0.51**	**0.438**	**11.13**	**0.172**	**4.37**	**0.122**	**3.11**	**1.71**	**7.61**	**6.43**	**1.13**	**C0250-020-0438-S***	**0.200**	**5.08**	**1.27**	**5.67**	**5.36**	**0.94**
C0250-020-0500-M*	**0.250**	**6.35**	**0.020**	**0.51**	**0.500**	**12.70**	**0.192**	**4.89**	**0.133**	**3.38**	**1.71**	**7.61**	**5.56**	**0.97**	**C0250-020-0500-S***	**0.225**	**5.71**	**1.27**	**5.67**	**4.63**	**0.81**
C0250-020-0563-M*	**0.250**	**6.35**	**0.020**	**0.51**	**0.563**	**14.30**	**0.213**	**5.42**	**0.144**	**3.65**	**1.71**	**7.61**	**4.89**	**0.86**	**C0250-020-0563-S***	**0.250**	**6.35**	**1.27**	**5.67**	**4.07**	**0.71**
C0250-020-0625-M*	**0.250**	**6.35**	**0.020**	**0.51**	**0.625**	**15.88**	**0.234**	**5.94**	**0.154**	**3.91**	**1.71**	**7.61**	**4.37**	**0.76**	**C0250-020-0625-S***	**0.275**	**6.98**	**1.27**	**5.67**	**3.64**	**0.64**
C0250-020-0688-M*	**0.250**	**6.35**	**0.020**	**0.51**	**0.688**	**17.48**	**0.255**	**6.48**	**0.164**	**4.15**	**1.71**	**7.61**	**3.95**	**0.69**	**C0250-020-0688-S***	**0.301**	**7.64**	**1.27**	**5.67**	**3.29**	**0.58**
C0250-020-0750-M*	**0.250**	**6.35**	**0.020**	**0.51**	**0.750**	**19.05**	**0.275**	**6.99**	**0.173**	**4.40**	**1.71**	**7.61**	**3.60**	**0.63**	**C0250-020-0750-S***	**0.325**	**8.26**	**1.27**	**5.67**	**3.00**	**0.52**
C0250-020-0813-M*	**0.250**	**6.35**	**0.020**	**0.51**	**0.813**	**20.65**	**0.297**	**7.54**	**0.183**	**4.64**	**1.71**	**7.61**	**3.31**	**0.58**	**C0250-020-0813-S***	**0.351**	**8.93**	**1.27**	**5.67**	**2.76**	**0.48**
C0250-020-0875-M*	**0.250**	**6.35**	**0.020**	**0.51**	**0.875**	**22.23**	**0.316**	**8.03**	**0.193**	**4.90**	**1.71**	**7.61**	**3.06**	**0.54**	**C0250-020-0875-S***	**0.375**	**9.53**	**1.27**	**5.67**	**2.55**	**0.45**
C0250-020-1000-M*	**0.250**	**6.35**	**0.020**	**0.51**	**1.000**	**25.40**	**0.357**	**9.07**	**0.212**	**5.39**	**1.71**	**7.61**	**2.66**	**0.47**	**C0250-020-1000-S***	**0.425**	**10.79**	**1.27**	**5.67**	**2.22**	**0.39**
C0250-020-1250-M*	**0.250**	**6.35**	**0.020**	**0.51**	**1.250**	**31.75**	**0.440**	**11.17**	**0.251**	**6.38**	**1.71**	**7.61**	**2.11**	**0.37**	**C0250-020-1250-S***	**0.525**	**13.34**	**1.27**	**5.67**	**1.76**	**0.31**
C0250-020-1375-M*	**0.250**	**6.35**	**0.020**	**0.51**	**1.375**	**34.93**	**0.470**	**11.94**	**0.273**	**6.94**	**1.71**	**7.61**	**1.89**	**0.33**	**C0250-020-1375-S***	**0.566**	**14.37**	**1.27**	**5.67**	**1.57**	**0.28**
C0250-020-1500-M*	**0.250**	**6.35**	**0.020**	**0.51**	**1.500**	**38.10**	**0.517**	**13.14**	**0.291**	**7.40**	**1.71**	**7.61**	**1.74**	**0.30**	**C0250-020-1500-S***	**0.621**	**15.77**	**1.27**	**5.67**	**1.45**	**0.25**
C0250-020-1750-M*	**0.250**	**6.35**	**0.020**	**0.51**	**1.750**	**44.45**	**0.595**	**15.10**	**0.331**	**8.41**	**1.71**	**7.61**	**1.48**	**0.26**	**C0250-020-1750-S***	**0.716**	**18.20**	**1.27**	**5.67**	**1.23**	**0.22**
C0250-020-1880-M*	**0.250**	**6.35**	**0.020**	**0.51**	**1.880**	**47.75**	**0.625**	**15.88**	**0.424**	**10.77**	**1.38**	**6.14**	**1.10**	**0.19**	**C0250-020-1880-S***	**0.625**	**15.88**	**1.15**	**5.11**	**0.92**	**0.16**
C0250-025-0250-M	**0.250**	**6.35**	**0.025**	**0.64**	**0.250**	**6.35**	**0.143**	**3.64**	**0.131**	**3.32**	**1.71**	**7.59**	**16.00**	**2.80**	**C0250-025-0250-S**	**0.143**	**3.64**	**1.42**	**6.33**	**13.33**	**2.33**
C0250-025-0410-M	**0.250**	**6.35**	**0.025**	**0.64**	**0.410**	**10.41**	**0.191**	**4.86**	**0.160**	**4.07**	**2.62**	**11.67**	**12.00**	**2.10**	**C0250-025-0410-S**	**0.191**	**4.86**	**2.19**	**9.72**	**10.00**	**1.75**
C0250-025-0440-M	**0.250**	**6.35**	**0.025**	**0.64**	**0.440**	**11.18**	**0.212**	**5.37**	**0.144**	**3.65**	**3.20**	**14.22**	**14.00**	**2.45**	**C0250-025-0440-S**	**0.234**	**5.94**	**2.40**	**10.69**	**11.66**	**2.04**
C0250-025-0500-M	**0.250**	**6.35**	**0.025**	**0.64**	**0.500**	**12.70**	**0.234**	**5.93**	**0.160**	**4.07**	**3.20**	**14.22**	**12.00**	**2.10**	**C0250-025-0500-S**	**0.260**	**6.59**	**2.40**	**10.69**	**10.00**	**1.75**
C0250-025-0590-M	**0.250**	**6.35**	**0.025**	**0.64**	**0.590**	**14.99**	**0.300**	**7.62**	**0.261**	**6.63**	**1.80**	**8.00**	**6.20**	**1.09**	**C0250-025-0590-S**	**0.300**	**7.62**	**1.50**	**6.66**	**5.17**	**0.90**
C0250-025-0690-M	**0.250**	**6.35**	**0.025**	**0.64**	**0.690**	**17.53**	**0.300**	**7.62**	**0.210**	**5.34**	**3.20**	**14.22**	**8.20**	**1.44**	**C0250-025-0690-S**	**0.338**	**8.59**	**2.40**	**10.69**	**6.83**	**1.20**
C0250-025-1130-M	**0.250**	**6.35**	**0.025**	**0.64**	**1.130**	**28.70**	**0.445**	**11.30**	**0.340**	**8.64**	**3.08**	**13.72**	**4.50**	**0.79**	**C0250-025-1130-S**	**0.489**	**12.41**	**2.40**	**10.69**	**3.75**	**0.66**
C0250-025-1780-M	**0.250**	**6.35**	**0.025**	**0.64**	**1.780**	**45.21**	**0.765**	**19.43**	**0.615**	**15.62**	**2.33**	**10.38**	**2.30**	**0.40**	**C0250-025-1780-S**	**0.765**	**19.43**	**1.94**	**8.65**	**1.92**	**0.34**
C0250-025-2000-M	**0.250**	**6.35**	**0.025**	**0.64**	**2.000**	**50.80**	**0.894**	**22.70**	**0.734**	**18.63**	**2.10**	**9.35**	**1.90**	**0.33**	**C0250-025-2000-S**	**0.894**	**22.70**	**1.75**	**7.79**	**1.58**	**0.28**
C0250-026-0938-M	**0.250**	**6.35**	**0.026**	**0.66**	**0.938**	**23.83**	**0.508**	**12.89**	**0.247**	**6.28**	**3.57**	**15.87**	**8.29**	**1.45**	**C0250-026-0938-S**	**0.549**	**13.95**	**2.69**	**11.95**	**6.91**	**1.21**
C0250-026-1000-M	**0.250**	**6.35**	**0.026**	**0.66**	**1.000**	**25.40**	**0.518**	**13.15**	**0.270**	**6.86**	**3.57**	**15.87**	**7.40**	**1.30**	**C0250-026-1000-S**	**0.564**	**14.33**	**2.69**	**11.95**	**6.16**	**1.08**
C0250-028-0440-M	**0.250**	**6.35**	**0.028**	**0.71**	**0.440**	**11.18**	**0.221**	**5.61**	**0.178**	**4.51**	**4.39**	**19.51**	**20.00**	**3.50**	**C0250-028-0440-S**	**0.241**	**6.13**	**3.31**	**14.72**	**16.66**	**2.92**
C0250-028-0560-M	**0.250**	**6.35**	**0.028**	**0.71**	**0.560**	**14.22**	**0.292**	**7.41**	**0.257**	**6.52**	**3.22**	**14.32**	**12.00**	**2.10**	**C0250-028-0560-S**	**0.292**	**7.41**	**2.68**	**11.93**	**10.00**	**1.75**
C0250-028-0630-M	**0.250**	**6.35**	**0.028**	**0.71**	**0.630**	**16.00**	**0.302**	**7.68**	**0.257**	**6.52**	**3.93**	**17.49**	**12.00**	**2.10**	**C0250-028-0630-S**	**0.302**	**7.68**	**3.28**	**14.57**	**10.00**	**1.75**
C0250-028-0810-M	**0.250**	**6.35**	**0.028**	**0.71**	**0.810**	**20.57**	**0.406**	**10.32**	**0.352**	**8.94**	**3.27**	**14.54**	**8.10**	**1.42**	**C0250-028-0810-S**	**0.406**	**10.32**	**2.72**	**12.11**	**6.75**	**1.18**
C0250-028-1000-M	**0.250**	**6.35**	**0.028**	**0.71**	**1.000**	**25.40**	**0.513**	**13.02**	**0.323**	**8.19**	**4.39**	**19.51**	**9.00**	**1.58**	**C0250-028-1000-S**	**0.559**	**14.19**	**3.31**	**14.72**	**7.50**	**1.31**
C0250-028-1380-M	**0.250**	**6.35**	**0.028**	**0.71**	**1.380**	**35.05**	**0.649**	**16.49**	**0.455**	**11.54**	**4.39**	**19.51**	**6.00**	**1.05**	**C0250-028-1380-S**	**0.718**	**18.23**	**3.31**	**14.72**	**5.00**	**0.87**
C0250-029-0410-M	**0.250**	**6.35**	**0.029**	**0.74**	**0.410**	**10.41**	**0.221**	**5.62**	**0.197**	**5.02**	**3.96**	**17.62**	**21.00**	**3.68**	**C0250-029-0410-S**	**0.221**	**5.62**	**3.30**	**14.68**	**17.49**	**3.06**
C0250-029-0530-M	**0.250**	**6.35**	**0.029**	**0.74**	**0.530**	**13.46**	**0.307**	**7.81**	**0.282**	**7.15**	**2.89**	**12.87**	**13.00**	**2.28**	**C0250-029-0530-S**	**0.307**	**7.81**	**2.41**	**10.72**	**10.83**	**1.90**
C0250-029-2250-M	**0.250**	**6.35**	**0.029**	**0.74**	**2.250**	**57.15**	**1.136**	**28.85**	**0.986**	**25.05**	**3.45**	**15.36**	**3.10**	**0.54**	**C0250-029-2250-S**	**1.136**	**28.85**	**2.88**	**12.80**	**2.58**	**0.45**

Part Numbers with an "*" are squared and not ground. **Part Numbers in bold** represent the newly expanded Associated Spring RAYMOND compression spring offering.

MUSIC WIRE															STAINLESS STEEL						
Catalog #	Outside Diameter (OD)		Wire Diameter (d)		Free Length (L) Approx		Load Length (L_1)		Solid Height (Sh) Approx		Load (P) at L_1		Spring Rate (R)		Catalog #	Load Length (L_1)		Load (P) at L_1		Spring Rate (R)	
	in	mm	in	mm	in	mm	in	mm	in	mm	lb	N	lb/in	N/mm		in	mm	lb	N	lb/in	N/mm
C0250-029-2340-M	**0.250**	**6.35**	**0.029**	**0.74**	**2.340**	**59.44**	**1.216**	**30.88**	**0.728**	**18.49**	**4.83**	**21.51**	**4.30**	**0.75**	**C0250-029-2340-S**	**1.320**	**33.54**	**3.65**	**16.24**	**3.58**	**0.63**
C0250-030-0310-M	**0.250**	**6.35**	**0.030**	**0.76**	**0.310**	**7.87**	**0.201**	**5.10**	**0.191**	**4.84**	**2.95**	**13.12**	**27.00**	**4.73**	**C0250-030-0310-S**	**0.201**	**5.10**	**2.46**	**10.93**	**22.49**	**3.94**
C0250-030-0500-M	**0.250**	**6.35**	**0.030**	**0.76**	**0.500**	**12.70**	**0.259**	**6.57**	**0.220**	**5.58**	**5.31**	**23.63**	**22.00**	**3.85**	**C0250-030-0500-S**	**0.281**	**7.13**	**4.02**	**17.86**	**18.33**	**3.21**
C0250-030-0630-M	**0.250**	**6.35**	**0.030**	**0.76**	**0.630**	**16.00**	**0.335**	**8.51**	**0.254**	**6.46**	**5.31**	**23.63**	**18.00**	**3.15**	**C0250-030-0630-S**	**0.362**	**9.20**	**4.02**	**17.86**	**14.99**	**2.62**
C0250-030-0690-M	**0.250**	**6.35**	**0.030**	**0.76**	**0.690**	**17.53**	**0.369**	**9.37**	**0.328**	**8.33**	**4.17**	**18.56**	**13.00**	**2.28**	**C0250-030-0690-S**	**0.369**	**9.37**	**3.48**	**15.46**	**10.83**	**1.90**
C0250-030-0880-M	**0.250**	**6.35**	**0.030**	**0.76**	**0.880**	**22.35**	**0.437**	**11.11**	**0.350**	**8.89**	**5.31**	**23.63**	**12.00**	**2.10**	**C0250-030-0880-S**	**0.478**	**12.15**	**4.02**	**17.86**	**10.00**	**1.75**
C0250-030-0940-M	**0.250**	**6.35**	**0.030**	**0.76**	**0.940**	**23.88**	**0.457**	**11.61**	**0.376**	**9.55**	**5.31**	**23.63**	**11.00**	**1.93**	**C0250-030-0940-S**	**0.502**	**12.74**	**4.02**	**17.86**	**9.16**	**1.60**
C0250-030-1250-M	**0.250**	**6.35**	**0.030**	**0.76**	**1.250**	**31.75**	**0.719**	**18.26**	**0.407**	**10.35**	**5.31**	**23.63**	**10.00**	**1.75**	**C0250-030-1250-S**	**0.768**	**19.50**	**4.02**	**17.86**	**8.33**	**1.46**
C0250-030-1380-M	**0.250**	**6.35**	**0.030**	**0.76**	**1.380**	**35.05**	**0.816**	**20.72**	**0.752**	**19.10**	**2.82**	**12.55**	**5.00**	**0.88**	**C0250-030-1380-S**	**0.816**	**20.72**	**2.35**	**10.45**	**4.17**	**0.73**
C0250-030-1630-M	**0.250**	**6.35**	**0.030**	**0.76**	**1.630**	**41.40**	**0.853**	**21.67**	**0.752**	**19.10**	**3.88**	**17.28**	**5.00**	**0.88**	**C0250-030-1630-S**	**0.853**	**21.67**	**3.24**	**14.39**	**4.17**	**0.73**
C0250-030-2500-M	**0.250**	**6.35**	**0.030**	**0.76**	**2.500**	**63.50**	**1.370**	**34.80**	**0.796**	**20.22**	**5.31**	**23.63**	**4.70**	**0.82**	**C0250-030-2500-S**	**1.474**	**37.45**	**4.02**	**17.86**	**3.92**	**0.69**
C0250-030-2780-M	**0.250**	**6.35**	**0.030**	**0.76**	**2.780**	**70.61**	**1.540**	**39.13**	**1.388**	**35.25**	**3.22**	**14.34**	**2.60**	**0.46**	**C0250-030-2780-S**	**1.540**	**39.13**	**2.68**	**11.94**	**2.17**	**0.38**
C0250-035-0313-M	**0.250**	**6.35**	**0.035**	**0.89**	**0.313**	**7.95**	**0.205**	**5.20**	**0.175**	**4.45**	**8.13**	**36.16**	**75.05**	**13.13**	**C0250-035-0313-S**	**0.214**	**5.44**	**6.17**	**27.43**	**62.52**	**10.94**
C0250-035-0375-M	**0.250**	**6.35**	**0.035**	**0.89**	**0.375**	**9.53**	**0.239**	**6.07**	**0.205**	**5.22**	**8.13**	**36.16**	**59.80**	**10.47**	**C0250-035-0375-S**	**0.251**	**6.38**	**6.17**	**27.43**	**49.81**	**8.72**
C0250-035-0438-M	**0.250**	**6.35**	**0.035**	**0.89**	**0.438**	**11.13**	**0.274**	**6.96**	**0.234**	**5.96**	**8.13**	**36.16**	**49.56**	**8.67**	**C0250-035-0438-S**	**0.289**	**7.33**	**6.17**	**27.43**	**41.28**	**7.22**
C0250-035-0500-M	**0.250**	**6.35**	**0.035**	**0.89**	**0.500**	**12.70**	**0.308**	**7.83**	**0.262**	**6.64**	**8.13**	**36.16**	**42.41**	**7.42**	**C0250-035-0500-S**	**0.325**	**8.27**	**6.17**	**27.43**	**35.33**	**6.18**
C0250-035-0563-M	**0.250**	**6.35**	**0.035**	**0.89**	**0.563**	**14.30**	**0.343**	**8.72**	**0.289**	**7.34**	**8.13**	**36.16**	**36.99**	**6.47**	**C0250-035-0563-S**	**0.363**	**9.22**	**6.17**	**27.43**	**30.81**	**5.39**
C0250-035-0625-M	**0.250**	**6.35**	**0.035**	**0.89**	**0.625**	**15.88**	**0.378**	**9.59**	**0.316**	**8.03**	**8.13**	**36.16**	**32.86**	**5.75**	**C0250-035-0625-S**	**0.400**	**10.15**	**6.17**	**27.43**	**27.37**	**4.79**
C0250-035-0688-M	**0.250**	**6.35**	**0.035**	**0.89**	**0.688**	**17.48**	**0.413**	**10.48**	**0.344**	**8.73**	**8.13**	**36.16**	**29.51**	**5.16**	**C0250-035-0688-S**	**0.437**	**11.10**	**6.17**	**27.43**	**24.58**	**4.30**
C0250-035-0750-M	**0.250**	**6.35**	**0.035**	**0.89**	**0.750**	**19.05**	**0.447**	**11.35**	**0.371**	**9.42**	**8.13**	**36.16**	**26.82**	**4.69**	**C0250-035-0750-S**	**0.474**	**12.04**	**6.17**	**27.43**	**22.34**	**3.91**
C0250-035-0813-M	**0.250**	**6.35**	**0.035**	**0.89**	**0.813**	**20.65**	**0.482**	**12.24**	**0.398**	**10.12**	**8.13**	**36.16**	**24.55**	**4.30**	**C0250-035-0813-S**	**0.511**	**12.99**	**6.17**	**27.43**	**20.45**	**3.58**
C0250-035-0875-M	**0.250**	**6.35**	**0.035**	**0.89**	**0.875**	**22.23**	**0.516**	**13.11**	**0.426**	**10.81**	**8.13**	**36.16**	**22.66**	**3.97**	**C0250-035-0875-S**	**0.548**	**13.93**	**6.17**	**27.43**	**18.88**	**3.30**
C0250-035-0938-M	**0.250**	**6.35**	**0.035**	**0.89**	**0.938**	**23.83**	**0.551**	**14.00**	**0.453**	**11.51**	**8.13**	**36.16**	**21.01**	**3.68**	**C0250-035-0938-S**	**0.586**	**14.87**	**6.17**	**27.43**	**17.50**	**3.06**
C0250-035-1000-M	**0.250**	**6.35**	**0.035**	**0.89**	**1.000**	**25.40**	**0.586**	**14.87**	**0.480**	**12.20**	**8.13**	**36.16**	**19.61**	**3.43**	**C0250-035-1000-S**	**0.622**	**15.81**	**6.17**	**27.43**	**16.34**	**2.86**
C0250-035-1250-M	**0.250**	**6.35**	**0.035**	**0.89**	**1.250**	**31.75**	**0.724**	**18.40**	**0.589**	**14.97**	**8.13**	**36.16**	**15.46**	**2.71**	**C0250-035-1250-S**	**0.771**	**19.59**	**6.17**	**27.43**	**12.88**	**2.25**
C0250-035-1375-M	**0.250**	**6.35**	**0.035**	**0.89**	**1.375**	**34.93**	**0.794**	**20.16**	**0.644**	**16.36**	**8.13**	**36.16**	**13.98**	**2.45**	**C0250-035-1375-S**	**0.845**	**21.47**	**6.17**	**27.43**	**11.65**	**2.04**
C0250-035-1500-M	**0.250**	**6.35**	**0.035**	**0.89**	**1.500**	**38.10**	**0.862**	**21.91**	**0.699**	**17.76**	**8.13**	**36.16**	**12.75**	**2.23**	**C0250-035-1500-S**	**0.919**	**23.35**	**6.17**	**27.43**	**10.62**	**1.86**
C0250-035-1750-M	**0.250**	**6.35**	**0.035**	**0.89**	**1.750**	**44.45**	**1.002**	**25.44**	**0.808**	**20.52**	**8.13**	**36.16**	**10.86**	**1.90**	**C0250-035-1750-S**	**1.068**	**27.13**	**6.17**	**27.43**	**9.05**	**1.58**
C0250-035-2000-M	**0.250**	**6.35**	**0.035**	**0.89**	**2.000**	**50.80**	**1.140**	**28.95**	**0.918**	**23.31**	**8.13**	**36.16**	**9.45**	**1.65**	**C0250-035-2000-S**	**1.217**	**30.90**	**6.17**	**27.43**	**7.87**	**1.38**
C0250-035-2250-M	**0.250**	**6.35**	**0.035**	**0.89**	**2.250**	**57.15**	**1.279**	**32.48**	**1.027**	**26.07**	**8.13**	**36.16**	**8.37**	**1.46**	**C0250-035-2250-S**	**1.365**	**34.68**	**6.17**	**27.43**	**6.97**	**1.22**
C0250-035-2500-M	**0.250**	**6.35**	**0.035**	**0.89**	**2.500**	**63.50**	**1.418**	**36.01**	**1.136**	**28.85**	**8.13**	**36.16**	**7.51**	**1.31**	**C0250-035-2500-S**	**1.514**	**38.46**	**6.17**	**27.43**	**6.26**	**1.09**
D11300*	0.268	6.80	0.020	0.50	0.531	13.50	0.169	4.30	0.128	3.25	1.48	6.57	4.17	0.73	D21300*	0.169	4.30	1.23	5.47	3.49	0.61
D11310*	0.268	6.80	0.020	0.50	0.787	20.00	0.236	6.00	0.167	4.25	1.48	6.57	2.63	0.46	D21310*	0.236	6.00	1.23	5.47	2.17	0.38
D11320*	0.268	6.80	0.020	0.50	1.181	30.00	0.343	8.70	0.226	5.75	1.48	6.57	1.71	0.30	D21320*	0.343	8.70	1.23	5.47	1.43	0.25
D11330*	0.268	6.80	0.020	0.50	1.732	44.00	0.480	12.20	0.305	7.75	1.48	6.57	1.20	0.21	D21330*	0.480	12.20	1.23	5.47	0.97	0.17
D11340*	0.268	6.80	0.020	0.50	2.559	65.00	0.685	17.40	0.423	10.75	1.48	6.57	0.80	0.14	D21340*	0.685	17.40	1.23	5.47	0.69	0.12
D11500*	0.273	6.93	0.025	0.63	0.453	11.50	0.181	4.60	0.161	4.10	2.80	12.45	10.46	1.83	D21500*	0.181	4.60	2.33	10.37	8.69	1.52
D11510*	0.273	6.93	0.025	0.63	0.669	17.00	0.244	6.20	0.211	5.36	2.80	12.45	6.69	1.17	D21510*	0.244	6.20	2.33	10.37	5.54	0.97
D11520*	0.273	6.93	0.025	0.63	1.004	25.50	0.350	8.90	0.285	7.25	2.80	12.45	4.34	0.76	D21520*	0.350	8.90	2.33	10.37	3.60	0.63
D11530*	0.273	6.93	0.025	0.63	1.437	36.50	0.484	12.30	0.385	9.77	2.80	12.45	2.91	0.51	D21530*	0.484	12.30	2.33	10.37	2.40	0.42
D11540*	0.273	6.93	0.025	0.63	2.126	54.00	0.697	17.70	0.533	13.55	2.80	12.45	1.94	0.34	D21540*	0.697	17.70	2.33	10.37	1.60	0.28
D11700*	0.280	7.10	0.031	0.80	0.413	10.50	0.220	5.60	0.205	5.20	5.40	24.03	27.26	4.77	D21700*	0.220	5.60	4.50	20.02	22.69	3.97
D11710*	0.280	7.10	0.031	0.80	0.610	15.50	0.303	7.70	0.268	6.80	5.40	24.03	17.31	3.03	D21710*	0.303	7.70	4.50	20.02	14.40	2.52
D11720*	0.280	7.10	0.031	0.80	0.906	23.00	0.429	10.90	0.362	9.20	5.40	24.03	11.20	1.96	D21720*	0.429	10.90	4.50	20.02	9.31	1.63
D11730*	0.280	7.10	0.031	0.80	1.299	33.00	0.594	15.10	0.488	12.40	5.40	24.03	7.60	1.33	D21730*	0.594	15.10	4.50	20.02	6.34	1.11
D11740*	0.280	7.10	0.031	0.80	1.890	48.00	0.846	21.50	0.677	17.20	5.40	24.03	5.14	0.90	D21740*	0.846	21.50	4.50	20.02	4.29	0.75
C0281-028-0250-M	**0.281**	**7.14**	**0.028**	**0.71**	**0.250**	**6.35**	**0.123**	**3.13**	**0.106**	**2.69**	**3.74**	**16.65**	**29.55**	**5.17**	**C0281-028-0250-S**	**0.130**	**3.29**	**2.96**	**13.19**	**24.62**	**4.31**
C0281-028-0313-M	**0.281**	**7.14**	**0.028**	**0.71**	**0.313**	**7.95**	**0.149**	**3.78**	**0.126**	**3.19**	**3.67**	**16.31**	**22.31**	**3.90**	**C0281-028-0313-S**	**0.153**	**3.90**	**2.96**	**13.19**	**18.58**	**3.25**
C0281-028-0375-M	**0.281**	**7.14**	**0.028**	**0.71**	**0.375**	**9.53**	**0.174**	**4.41**	**0.145**	**3.68**	**3.62**	**16.10**	**17.97**	**3.14**	**C0281-028-0375-S**	**0.177**	**4.49**	**2.96**	**13.19**	**14.97**	**2.62**
C0281-028-0438-M	**0.281**	**7.14**	**0.028**	**0.71**	**0.438**	**11.13**	**0.199**	**5.05**	**0.164**	**4.18**	**3.59**	**15.97**	**15.01**	**2.63**	**C0281-028-0438-S**	**0.201**	**5.10**	**2.96**	**13.19**	**12.50**	**2.19**
C0281-028-0500-M	**0.281**	**7.14**	**0.028**	**0.71**	**0.500**	**12.70**	**0.223**	**5.67**	**0.183**	**4.65**	**3.57**	**15.90**	**12.91**	**2.26**	**C0281-028-0500-S**	**0.224**	**5.70**	**2.96**	**13.19**	**10.75**	**1.88**
C0281-028-0563-M	**0.281**	**7.14**	**0.028**	**0.71**	**0.563**	**14.30**	**0.247**	**6.27**	**0.201**	**5.10**	**3.58**	**15.90**	**11.31**	**1.98**	**C0281-028-0563-S**	**0.248**	**6.31**	**2.96**	**13.19**	**9.42**	**1.65**
C0281-028-0625-M	**0.281**	**7.14**	**0.028**	**0.71**	**0.625**	**15.88**	**0.270**	**6.86**	**0.218**	**5.54**	**3.58**	**15.91**	**10.08**	**1.76**	**C0281-028-0625-S**	**0.272**	**6.91**	**2.96**	**13.19**	**8.40**	**1.47**
C0281-028-0750-M	**0.281**	**7.14**	**0.028**	**0.71**	**0.750**	**19.05**	**0.317**	**8.06**	**0.253**	**6.43**	**3.57**	**15.90**	**8.26**	**1.45**	**C0281-028-0750-S**	**0.319**	**8.11**	**2.96**	**13.19**	**6.88**	**1.20**
C0281-028-0875-M	**0.281**	**7.14**	**0.028**	**0.71**	**0.875**	**22.23**	**0.364**	**9.25**	**0.288**	**7.31**	**3.57**	**15.90**	**7.00**	**1.23**	**C0281-028-0875-S**	**0.367**	**9.31**	**2.96**	**13.19**	**5.83**	**1.02**
C0281-028-1000-M	**0.281**	**7.14**	**0.028**	**0.71**	**1.000**	**25.40**	**0.412**	**10.45**	**0.323**	**8.21**	**3.57**	**15.89**	**6.07**	**1.06**	**C0281-028-1000-S**	**0.414**	**10.51**	**2.96**	**13.19**	**5.06**	**0.88**
C0281-028-1130-M	**0.281**	**7.14**	**0.028**	**0.71**	**1.130**	**28.70**	**0.488**	**12.39**	**0.393**	**9.98**	**3.08**	**13.72**	**4.80**	**0.84**	**C0281-028-1130-S**	**0.488**	**12.39**	**2.57**	**11.43**	**4.00**	**0.70**
C0281-028-1250-M	**0.281**	**7.14**	**0.028**	**0.71**	**1.250**	**31.75**	**0.506**	**12.84**	**0.393**	**9.98**	**3.57**	**15.89**	**4.80**	**0.84**	**C0281-028-1250-S**	**0.509**	**12.92**	**2.96**	**13.19**	**4.00**	**0.70**
C0281-028-1375-M	**0.281**	**7.14**	**0.028**	**0.71**	**1.375**	**34.93**	**0.552**	**14.03**	**0.428**	**10.86**	**3.58**	**15.92**	**4.35**	**0.76**	**C0281-028-1375-S**	**0.557**	**14.14**	**2.96**	**13.19**	**3.62**	**0.63**
C0281-028-2000-M	**0.281**	**7.14**	**0.028**	**0.71**	**2.000**	**50.80**	**0.847**	**21.51**	**0.676**	**17.16**	**3.00**	**13.33**	**2.60**	**0.46**	**C0281-028-2000-S**	**0.847**	**21.51**	**2.50**	**11.11**	**2.17**	**0.38**
C0281-028-2630-M	**0.281**	**7.14**	**0.028**	**0.71**	**2.630**	**66.80**	**1.032**	**26.22**	**0.788**	**20.01**	**3.51**	**15.63**	**2.20**	**0.39**	**C0281-028-2630-S**	**1.032**	**26.22**	**2.93**	**13.02**	**1.83**	**0.32**
D11900	0.287	7.30	0.039	1.00	0.394	10.00	0.287	7.30	0.217	5.50	7.67	34.13	66.11	11.57	D21900	0.287	7.30	6.39	28.43	55.09	9.64
D11910	0.287	7.30	0.039	1.00	0.571	14.50	0.398	10.10	0.295	7.50	7.67	34.13	42.23	7.39	D21910	0.398	10.10	6.39	28.43	35.20	6.16
D11920	0.287	7.30	0.039	1.00	0.846	21.50	0.563	14.30	0.413	10.50	7.67	34.13	27.37	4.79	D21920	0.563	14.30	6.39	28.43	22.80	3.99

FOR INFORMATION ON ALTERNATIVE FINISHES, SEE PAGE 311

Part Numbers with an "*" are squared and not ground. **Part Numbers in bold** represent the newly expanded Associated Spring RAYMOND compression spring offering.

(OD) 0.287 - 0.294

MUSIC WIRE															STAINLESS STEEL						
Catalog #	Outside Diameter (OD)		Wire Diameter (d)		Free Length (L) Approx		Load Length (L_1)		Solid Height (Sh) Approx		Load (P) at L_1		Spring Rate (R)		Catalog #	Load Length (L_1)		Load (P) at L_1		Spring Rate (R)	
	in	mm	in	mm	in	mm	in	mm	in	mm	lb	N	lb/in	N/mm		in	mm	lb	N	lb/in	N/mm
D11930	0.287	7.30	0.039	1.00	1.201	30.50	0.783	19.90	0.571	14.50	7.67	34.13	18.63	3.26	D21930	0.783	19.90	6.39	28.43	15.54	2.72
D11940	0.287	7.30	0.039	1.00	1.713	43.50	1.114	28.30	0.807	20.50	7.67	34.13	12.57	2.20	D21940	1.114	28.30	6.39	28.43	10.46	1.83
C0294-029-0563-M	**0.294**	**7.47**	**0.029**	**0.74**	**0.563**	**14.29**	**0.242**	**6.15**	**0.195**	**4.95**	**3.97**	**17.66**	**12.40**	**2.17**	**C0294-029-0563-S**	**0.272**	**6.90**	**3.14**	**13.95**	**10.78**	**1.89**
C0294-029-0625-M	**0.294**	**7.47**	**0.029**	**0.74**	**0.625**	**15.88**	**0.265**	**6.73**	**0.212**	**5.38**	**3.97**	**17.66**	**11.03**	**1.93**	**C0294-029-0625-S**	**0.298**	**7.57**	**3.14**	**13.95**	**9.59**	**1.68**
C0294-029-0688-M	**0.294**	**7.47**	**0.029**	**0.74**	**0.688**	**17.46**	**0.288**	**7.31**	**0.228**	**5.80**	**3.97**	**17.66**	**9.94**	**1.74**	**C0294-029-0688-S**	**0.325**	**8.24**	**3.14**	**13.95**	**8.64**	**1.51**
C0294-029-0750-M	**0.294**	**7.47**	**0.029**	**0.74**	**0.750**	**19.05**	**0.311**	**7.89**	**0.245**	**6.22**	**3.97**	**17.66**	**9.04**	**1.58**	**C0294-029-0750-S**	**0.351**	**8.92**	**3.14**	**13.95**	**7.86**	**1.38**
C0294-029-0813-M	**0.294**	**7.47**	**0.029**	**0.74**	**0.813**	**20.64**	**0.334**	**8.47**	**0.262**	**6.64**	**3.97**	**17.66**	**8.29**	**1.45**	**C0294-029-0813-S**	**0.377**	**9.59**	**3.14**	**13.95**	**7.21**	**1.26**
C0294-029-0875-M	**0.294**	**7.47**	**0.029**	**0.74**	**0.875**	**22.23**	**0.356**	**9.05**	**0.278**	**7.07**	**3.97**	**17.66**	**7.66**	**1.34**	**C0294-029-0875-S**	**0.404**	**10.26**	**3.14**	**13.95**	**6.66**	**1.17**
C0294-029-0938-M	**0.294**	**7.47**	**0.029**	**0.74**	**0.938**	**23.81**	**0.379**	**9.63**	**0.295**	**7.49**	**3.97**	**17.66**	**7.11**	**1.24**	**C0294-029-0938-S**	**0.430**	**10.93**	**3.14**	**13.95**	**6.19**	**1.08**
C0294-029-1000-M	**0.294**	**7.47**	**0.029**	**0.74**	**1.000**	**25.40**	**0.402**	**10.21**	**0.311**	**7.91**	**3.97**	**17.66**	**6.64**	**1.16**	**C0294-029-1000-S**	**0.457**	**11.60**	**3.14**	**13.95**	**5.77**	**1.01**
C0294-029-1125-M	**0.294**	**7.47**	**0.029**	**0.74**	**1.125**	**28.58**	**0.448**	**11.37**	**0.345**	**8.75**	**3.97**	**17.66**	**5.86**	**1.03**	**C0294-029-1125-S**	**0.510**	**12.95**	**3.14**	**13.95**	**5.10**	**0.89**
C0294-029-1250-M	**0.294**	**7.47**	**0.029**	**0.74**	**1.250**	**31.75**	**0.493**	**12.53**	**0.378**	**9.60**	**3.97**	**17.66**	**5.25**	**0.92**	**C0294-029-1250-S**	**0.563**	**14.29**	**3.14**	**13.95**	**4.56**	**0.80**
C0294-029-1375-M	**0.294**	**7.47**	**0.029**	**0.74**	**1.375**	**34.93**	**0.539**	**13.69**	**0.411**	**10.44**	**3.97**	**17.66**	**4.75**	**0.83**	**C0294-029-1375-S**	**0.616**	**15.64**	**3.14**	**13.95**	**4.13**	**0.72**
C0294-029-1500-M	**0.294**	**7.47**	**0.029**	**0.74**	**1.500**	**38.10**	**0.585**	**14.85**	**0.444**	**11.29**	**3.97**	**17.66**	**4.34**	**0.76**	**C0294-029-1500-S**	**0.669**	**16.98**	**3.14**	**13.95**	**3.77**	**0.66**
C0294-029-1625-M	**0.294**	**7.47**	**0.029**	**0.74**	**1.625**	**41.28**	**0.630**	**16.01**	**0.478**	**12.13**	**3.97**	**17.66**	**3.99**	**0.70**	**C0294-029-1625-S**	**0.722**	**18.33**	**3.14**	**13.95**	**3.47**	**0.61**
C0294-029-1750-M	**0.294**	**7.47**	**0.029**	**0.74**	**1.750**	**44.45**	**0.676**	**17.17**	**0.511**	**12.98**	**3.97**	**17.66**	**3.70**	**0.65**	**C0294-029-1750-S**	**0.774**	**19.67**	**3.14**	**13.95**	**3.22**	**0.56**
C0294-029-1875-M	**0.294**	**7.47**	**0.029**	**0.74**	**1.875**	**47.63**	**0.722**	**18.33**	**0.544**	**13.82**	**3.97**	**17.66**	**3.44**	**0.60**	**C0294-029-1875-S**	**0.827**	**21.02**	**3.14**	**13.95**	**2.99**	**0.52**
C0294-029-2000-M	**0.294**	**7.47**	**0.029**	**0.74**	**2.000**	**50.80**	**0.767**	**19.49**	**0.577**	**14.67**	**3.97**	**17.66**	**3.22**	**0.56**	**C0294-029-2000-S**	**0.880**	**22.36**	**3.14**	**13.95**	**2.80**	**0.49**
C0294-029-2125-M	**0.294**	**7.47**	**0.029**	**0.74**	**2.125**	**53.98**	**0.813**	**20.65**	**0.611**	**15.51**	**3.97**	**17.66**	**3.03**	**0.53**	**C0294-029-2125-S**	**0.933**	**23.70**	**3.14**	**13.95**	**2.63**	**0.46**
C0294-029-2250-M	**0.294**	**7.47**	**0.029**	**0.74**	**2.250**	**57.15**	**0.859**	**21.81**	**0.644**	**16.35**	**3.97**	**17.66**	**2.85**	**0.50**	**C0294-029-2250-S**	**0.986**	**25.05**	**3.14**	**13.95**	**2.48**	**0.43**
C0294-029-2375-M	**0.294**	**7.47**	**0.029**	**0.74**	**2.375**	**60.33**	**0.904**	**22.97**	**0.677**	**17.20**	**3.97**	**17.66**	**2.70**	**0.47**	**C0294-029-2375-S**	**1.039**	**26.39**	**3.14**	**13.95**	**2.35**	**0.41**
C0294-029-2500-M	**0.294**	**7.47**	**0.029**	**0.74**	**2.500**	**63.50**	**0.950**	**24.13**	**0.710**	**18.04**	**3.97**	**17.66**	**2.56**	**0.45**	**C0294-029-2500-S**	**1.092**	**27.74**	**3.14**	**13.95**	**2.23**	**0.39**
C0294-029-2625-M	**0.294**	**7.47**	**0.029**	**0.74**	**2.625**	**66.68**	**0.996**	**25.29**	**0.744**	**18.89**	**3.97**	**17.66**	**2.44**	**0.43**	**C0294-029-2625-S**	**1.145**	**29.08**	**3.14**	**13.95**	**2.12**	**0.37**
C0294-029-2750-M	**0.294**	**7.47**	**0.029**	**0.74**	**2.750**	**69.85**	**1.041**	**26.45**	**0.777**	**19.73**	**3.97**	**17.66**	**2.32**	**0.41**	**C0294-029-2750-S**	**1.198**	**30.43**	**3.14**	**13.95**	**2.02**	**0.35**
C0294-029-2875-M	**0.294**	**7.47**	**0.029**	**0.74**	**2.875**	**73.03**	**1.087**	**27.61**	**0.810**	**20.58**	**3.97**	**17.66**	**2.22**	**0.39**	**C0294-029-2875-S**	**1.251**	**31.77**	**3.14**	**13.95**	**1.93**	**0.34**
C0294-029-3000-M	**0.294**	**7.47**	**0.029**	**0.74**	**3.000**	**76.20**	**1.133**	**28.77**	**0.843**	**21.42**	**3.97**	**17.66**	**2.13**	**0.37**	**C0294-029-3000-S**	**1.304**	**33.12**	**3.14**	**13.95**	**1.85**	**0.32**
C0294-029-3250-M	**0.294**	**7.47**	**0.029**	**0.74**	**3.250**	**82.55**	**1.224**	**31.09**	**0.910**	**23.11**	**3.97**	**17.66**	**1.96**	**0.34**	**C0294-029-3250-S**	**1.410**	**35.80**	**3.14**	**13.95**	**1.70**	**0.30**
C0294-029-3500-M	**0.294**	**7.47**	**0.029**	**0.74**	**3.500**	**88.90**	**1.315**	**33.41**	**0.976**	**24.80**	**3.97**	**17.66**	**1.82**	**0.32**	**C0294-029-3500-S**	**1.515**	**38.49**	**3.14**	**13.95**	**1.58**	**0.28**
C0294-029-3750-M	**0.294**	**7.47**	**0.029**	**0.74**	**3.750**	**95.25**	**1.407**	**35.73**	**1.043**	**26.49**	**3.97**	**17.66**	**1.69**	**0.30**	**C0294-029-3750-S**	**1.621**	**41.18**	**3.14**	**13.95**	**1.47**	**0.26**
C0294-029-4000-M	**0.294**	**7.47**	**0.029**	**0.74**	**4.000**	**101.60**	**1.498**	**38.05**	**1.109**	**28.18**	**3.97**	**17.66**	**1.59**	**0.28**	**C0294-029-4000-S**	**1.727**	**43.87**	**3.14**	**13.95**	**1.38**	**0.24**
C0294-029-4250-M	**0.294**	**7.47**	**0.029**	**0.74**	**4.250**	**107.95**	**1.589**	**40.37**	**1.176**	**29.86**	**3.97**	**17.66**	**1.49**	**0.26**	**C0294-029-4250-S**	**1.833**	**46.56**	**3.14**	**13.95**	**1.30**	**0.23**
C0294-029-4500-M	**0.294**	**7.47**	**0.029**	**0.74**	**4.500**	**114.30**	**1.681**	**42.69**	**1.242**	**31.55**	**3.97**	**17.66**	**1.41**	**0.25**	**C0294-029-4500-S**	**1.939**	**49.25**	**3.14**	**13.95**	**1.23**	**0.21**
C0294-029-4750-M	**0.294**	**7.47**	**0.029**	**0.74**	**4.750**	**120.65**	**1.772**	**45.01**	**1.309**	**33.24**	**3.97**	**17.66**	**1.33**	**0.23**	**C0294-029-4750-S**	**2.045**	**51.94**	**3.14**	**13.95**	**1.16**	**0.20**
C0294-029-5000-M	**0.294**	**7.47**	**0.029**	**0.74**	**5.000**	**127.00**	**1.863**	**47.33**	**1.375**	**34.93**	**3.97**	**17.66**	**1.27**	**0.22**	**C0294-029-5000-S**	**2.151**	**54.63**	**3.14**	**13.95**	**1.10**	**0.19**
C0294-029-5250-M	**0.294**	**7.47**	**0.029**	**0.74**	**5.250**	**133.35**	**1.955**	**49.65**	**1.442**	**36.62**	**3.97**	**17.66**	**1.21**	**0.21**	**C0294-029-5250-S**	**2.256**	**57.31**	**3.14**	**13.95**	**1.05**	**0.18**
C0294-030-0563-M	**0.294**	**7.47**	**0.030**	**0.76**	**0.563**	**14.29**	**0.251**	**6.37**	**0.205**	**5.22**	**4.36**	**19.41**	**14.00**	**2.45**	**C0294-030-0563-S**	**0.279**	**7.09**	**3.45**	**15.35**	**12.17**	**2.13**
C0294-030-0625-M	**0.294**	**7.47**	**0.030**	**0.76**	**0.625**	**15.88**	**0.274**	**6.97**	**0.223**	**5.67**	**4.36**	**19.41**	**12.45**	**2.18**	**C0294-030-0625-S**	**0.306**	**7.78**	**3.45**	**15.35**	**10.82**	**1.89**
C0294-030-0688-M	**0.294**	**7.47**	**0.030**	**0.76**	**0.688**	**17.46**	**0.298**	**7.57**	**0.241**	**6.12**	**4.36**	**19.41**	**11.21**	**1.96**	**C0294-030-0688-S**	**0.333**	**8.47**	**3.45**	**15.35**	**9.75**	**1.71**
C0294-030-0750-M	**0.294**	**7.47**	**0.030**	**0.76**	**0.750**	**19.05**	**0.322**	**8.17**	**0.259**	**6.57**	**4.36**	**19.41**	**10.19**	**1.78**	**C0294-030-0750-S**	**0.361**	**9.16**	**3.45**	**15.35**	**8.86**	**1.55**
C0294-030-0813-M	**0.294**	**7.47**	**0.030**	**0.76**	**0.813**	**20.64**	**0.346**	**8.78**	**0.276**	**7.02**	**4.36**	**19.41**	**9.35**	**1.64**	**C0294-030-0813-S**	**0.388**	**9.85**	**3.45**	**15.35**	**8.13**	**1.42**
C0294-030-0875-M	**0.294**	**7.47**	**0.030**	**0.76**	**0.875**	**22.23**	**0.369**	**9.38**	**0.294**	**7.47**	**4.36**	**19.41**	**8.63**	**1.51**	**C0294-030-0875-S**	**0.415**	**10.54**	**3.45**	**15.35**	**7.50**	**1.31**
C0294-030-0938-M	**0.294**	**7.47**	**0.030**	**0.76**	**0.938**	**23.81**	**0.393**	**9.98**	**0.312**	**7.92**	**4.36**	**19.41**	**8.02**	**1.40**	**C0294-030-0938-S**	**0.442**	**11.24**	**3.45**	**15.35**	**6.97**	**1.22**
C0294-030-1000-M	**0.294**	**7.47**	**0.030**	**0.76**	**1.000**	**25.40**	**0.417**	**10.58**	**0.329**	**8.37**	**4.36**	**19.41**	**7.48**	**1.31**	**C0294-030-1000-S**	**0.470**	**11.93**	**3.45**	**15.35**	**6.51**	**1.14**
C0294-030-1125-M	**0.294**	**7.47**	**0.030**	**0.76**	**1.125**	**28.58**	**0.464**	**11.79**	**0.365**	**9.27**	**4.36**	**19.41**	**6.60**	**1.16**	**C0294-030-1125-S**	**0.524**	**13.31**	**3.45**	**15.35**	**5.74**	**1.00**
C0294-030-1250-M	**0.294**	**7.47**	**0.030**	**0.76**	**1.250**	**31.75**	**0.512**	**12.99**	**0.400**	**10.17**	**4.36**	**19.41**	**5.91**	**1.03**	**C0294-030-1250-S**	**0.579**	**14.70**	**3.45**	**15.35**	**5.14**	**0.90**
C0294-030-1375-M	**0.294**	**7.47**	**0.030**	**0.76**	**1.375**	**34.93**	**0.559**	**14.20**	**0.436**	**11.07**	**4.36**	**19.41**	**5.35**	**0.94**	**C0294-030-1375-S**	**0.633**	**16.08**	**3.45**	**15.35**	**4.65**	**0.81**
C0294-030-1500-M	**0.294**	**7.47**	**0.030**	**0.76**	**1.500**	**38.10**	**0.606**	**15.40**	**0.471**	**11.97**	**4.36**	**19.41**	**4.88**	**0.85**	**C0294-030-1500-S**	**0.688**	**17.46**	**3.45**	**15.35**	**4.25**	**0.74**
C0294-030-1625-M	**0.294**	**7.47**	**0.030**	**0.76**	**1.625**	**41.28**	**0.654**	**16.61**	**0.507**	**12.87**	**4.36**	**19.41**	**4.49**	**0.79**	**C0294-030-1625-S**	**0.742**	**18.85**	**3.45**	**15.35**	**3.91**	**0.68**
C0294-030-1750-M	**0.294**	**7.47**	**0.030**	**0.76**	**1.750**	**44.45**	**0.701**	**17.81**	**0.542**	**13.77**	**4.36**	**19.41**	**4.16**	**0.73**	**C0294-030-1750-S**	**0.796**	**20.23**	**3.45**	**15.35**	**3.62**	**0.63**
C0294-030-1875-M	**0.294**	**7.47**	**0.030**	**0.76**	**1.875**	**47.63**	**0.749**	**19.02**	**0.577**	**14.67**	**4.36**	**19.41**	**3.88**	**0.68**	**C0294-030-1875-S**	**0.851**	**21.61**	**3.45**	**15.35**	**3.37**	**0.59**
C0294-030-2000-M	**0.294**	**7.47**	**0.030**	**0.76**	**2.000**	**50.80**	**0.796**	**20.22**	**0.613**	**15.57**	**4.36**	**19.41**	**3.63**	**0.63**	**C0294-030-2000-S**	**0.905**	**23.00**	**3.45**	**15.35**	**3.15**	**0.55**
C0294-030-2125-M	**0.294**	**7.47**	**0.030**	**0.76**	**2.125**	**53.98**	**0.844**	**21.43**	**0.648**	**16.47**	**4.36**	**19.41**	**3.41**	**0.60**	**C0294-030-2125-S**	**0.960**	**24.38**	**3.45**	**15.35**	**2.96**	**0.52**
C0294-030-2250-M	**0.294**	**7.47**	**0.030**	**0.76**	**2.250**	**57.15**	**0.891**	**22.63**	**0.684**	**17.37**	**4.36**	**19.41**	**3.21**	**0.56**	**C0294-030-2250-S**	**1.014**	**25.76**	**3.45**	**15.35**	**2.79**	**0.49**
C0294-030-2375-M	**0.294**	**7.47**	**0.030**	**0.76**	**2.375**	**60.33**	**0.938**	**23.84**	**0.719**	**18.27**	**4.36**	**19.41**	**3.04**	**0.53**	**C0294-030-2375-S**	**1.069**	**27.15**	**3.45**	**15.35**	**2.64**	**0.46**
C0294-030-2500-M	**0.294**	**7.47**	**0.030**	**0.76**	**2.500**	**63.50**	**0.986**	**25.04**	**0.755**	**19.17**	**4.36**	**19.41**	**2.88**	**0.50**	**C0294-030-2500-S**	**1.123**	**28.53**	**3.45**	**15.35**	**2.51**	**0.44**
C0294-030-2625-M	**0.294**	**7.47**	**0.030**	**0.76**	**2.625**	**66.68**	**1.033**	**26.25**	**0.790**	**20.07**	**4.36**	**19.41**	**2.74**	**0.48**	**C0294-030-2625-S**	**1.178**	**29.91**	**3.45**	**15.35**	**2.38**	**0.42**
C0294-030-2750-M	**0.294**	**7.47**	**0.030**	**0.76**	**2.750**	**69.85**	**1.081**	**27.45**	**0.825**	**20.97**	**4.36**	**19.41**	**2.61**	**0.46**	**C0294-030-2750-S**	**1.232**	**31.30**	**3.45**	**15.35**	**2.27**	**0.40**
C0294-030-2875-M	**0.294**	**7.47**	**0.030**	**0.76**	**2.875**	**73.03**	**1.128**	**28.66**	**0.861**	**21.87**	**4.36**	**19.41**	**2.50**	**0.44**	**C0294-030-2875-S**	**1.287**	**32.68**	**3.45**	**15.35**	**2.17**	**0.38**
C0294-030-3000-M	**0.294**	**7.47**	**0.030**	**0.76**	**3.000**	**76.20**	**1.176**	**29.86**	**0.896**	**22.77**	**4.36**	**19.41**	**2.39**	**0.42**	**C0294-030-3000-S**	**1.341**	**34.07**	**3.45**	**15.35**	**2.08**	**0.36**
C0294-030-3250-M	**0.294**	**7.47**	**0.030**	**0.76**	**3.250**	**82.55**	**1.270**	**32.27**	**0.967**	**24.57**	**4.36**	**19.41**	**2.21**	**0.39**	**C0294-030-3250-S**	**1.450**	**36.83**	**3.45**	**15.35**	**1.92**	**0.34**
C0294-030-3500-M	**0.294**	**7.47**	**0.030**	**0.76**	**3.500**	**88.90**	**1.365**	**34.68**	**1.038**	**26.37**	**4.36**	**19.41**	**2.04**	**0.36**	**C0294-030-3500-S**	**1.559**	**39.60**	**3.45**	**15.35**	**1.78**	**0.31**
C0294-030-3750-M	**0.294**	**7.47**	**0.030**	**0.76**	**3.750**	**95.25**	**1.460**	**37.09**	**1.109**	**28.17**	**4.36**	**19.41**	**1.91**	**0.33**	**C0294-030-3750-S**	**1.668**	**42.37**	**3.45**	**15.35**	**1.66**	**0.29**
C0294-030-4000-M	**0.294**	**7.47**	**0.030**	**0.76**	**4.000**	**101.60**	**1.555**	**39.50**	**1.180**	**29.97**	**4.36**	**19.41**	**1.79**	**0.31**	**C0294-030-4000-S**	**1.777**	**45.13**	**3.45**	**15.35**	**1.55**	**0.27**
C0294-030-4250-M	**0.294**	**7.47**	**0.030**	**0.76**	**4.250**	**107.95**	**1.650**	**41.91**	**1.251**	**31.77**	**4.36**	**19.41**	**1.68**	**0.29**	**C0294-030-4250-S**	**1.886**	**47.90**	**3.45**	**15.35**	**1.46**	**0.26**

Part Numbers with an "*" are squared and not ground. **Part Numbers in bold** represent the newly expanded Associated Spring RAYMOND compression spring offering.

MUSIC WIRE															STAINLESS STEEL						
Catalog #	Outside Diameter (OD)		Wire Diameter (d)		Free Length (L) Approx		Load Length (L_1)		Solid Height (Sh) Approx		Load (P) at L_1		Spring Rate (R)		Catalog #	Load Length (L_1)		Load (P) at L_1		Spring Rate (R)	
	in	mm	in	mm	in	mm	in	mm	in	mm	lb	N	lb/in	N/mm		in	mm	lb	N	lb/in	N/mm
C0294-030-4500-M	0.294	7.47	0.030	0.76	4.500	114.30	1.745	44.32	1.321	33.57	4.36	19.41	1.58	0.28	**C0294-030-4500-S**	1.995	50.67	3.45	15.35	1.38	0.24
C0294-030-4750-M	0.294	7.47	0.030	0.76	4.750	120.65	1.840	46.73	1.392	35.37	4.36	19.41	1.50	0.26	**C0294-030-4750-S**	2.104	53.44	3.45	15.35	1.30	0.23
C0294-030-5000-M	0.294	7.47	0.030	0.76	5.000	127.00	1.934	49.14	1.463	37.17	4.36	19.41	1.42	0.25	**C0294-030-5000-S**	2.213	56.20	3.45	15.35	1.24	0.22
C0294-030-5250-M	0.294	7.47	0.030	0.76	5.250	133.35	2.029	51.55	1.534	38.97	4.36	19.41	1.36	0.24	**C0294-030-5250-S**	2.322	58.97	3.45	15.35	1.18	0.21
C0294-032-0500-M	0.294	7.47	0.032	0.81	0.500	12.70	0.242	6.15	0.206	5.24	5.22	23.23	20.25	3.54	**C0294-032-0500-S**	0.265	6.73	4.14	18.40	17.60	3.08
C0294-032-0563-M	0.294	7.47	0.032	0.81	0.563	14.29	0.268	6.80	0.226	5.75	5.22	23.23	17.71	3.10	**C0294-032-0563-S**	0.294	7.46	4.14	18.40	15.40	2.69
C0294-032-0625-M	0.294	7.47	0.032	0.81	0.625	15.88	0.293	7.44	0.246	6.25	5.22	23.23	15.73	2.75	**C0294-032-0625-S**	0.323	8.20	4.14	18.40	13.68	2.39
C0294-032-0688-M	0.294	7.47	0.032	0.81	0.688	17.46	0.319	8.09	0.266	6.76	5.22	23.23	14.16	2.48	**C0294-032-0688-S**	0.351	8.93	4.14	18.40	12.31	2.15
C0294-032-0750-M	0.294	7.47	0.032	0.81	0.750	19.05	0.344	8.74	0.286	7.27	5.22	23.23	12.87	2.25	**C0294-032-0750-S**	0.380	9.66	4.14	18.40	11.19	1.96
C0294-032-0813-M	0.294	7.47	0.032	0.81	0.813	20.64	0.370	9.39	0.306	7.77	5.22	23.23	11.79	2.06	**C0294-032-0813-S**	0.409	10.39	4.14	18.40	10.26	1.79
C0294-032-0875-M	0.294	7.47	0.032	0.81	0.875	22.23	0.395	10.04	0.326	8.28	5.22	23.23	10.88	1.90	**C0294-032-0875-S**	0.438	11.12	4.14	18.40	9.46	1.66
C0294-032-0938-M	0.294	7.47	0.032	0.81	0.938	23.81	0.421	10.68	0.346	8.79	5.22	23.23	10.11	1.77	**C0294-032-0938-S**	0.467	11.86	4.14	18.40	8.79	1.54
C0294-032-1000-M	0.294	7.47	0.032	0.81	1.000	25.40	0.446	11.33	0.366	9.29	5.22	23.23	9.43	1.65	**C0294-032-1000-S**	0.496	12.59	4.14	18.40	8.20	1.44
C0294-032-1125-M	0.294	7.47	0.032	0.81	1.125	28.58	0.497	12.63	0.406	10.30	5.22	23.23	8.32	1.46	**C0294-032-1125-S**	0.553	14.05	4.14	18.40	7.23	1.27
C0294-032-1250-M	0.294	7.47	0.032	0.81	1.250	31.75	0.548	13.92	0.446	11.32	5.22	23.23	7.44	1.30	**C0294-032-1250-S**	0.611	15.52	4.14	18.40	6.47	1.13
C0294-032-1375-M	0.294	7.47	0.032	0.81	1.375	34.93	0.599	15.22	0.485	12.33	5.22	23.23	6.73	1.18	**C0294-032-1375-S**	0.668	16.98	4.14	18.40	5.86	1.02
C0294-032-1500-M	0.294	7.47	0.032	0.81	1.500	38.10	0.650	16.52	0.525	13.34	5.22	23.23	6.15	1.08	**C0294-032-1500-S**	0.726	18.44	4.14	18.40	5.35	0.94
C0294-032-1625-M	0.294	7.47	0.032	0.81	1.625	41.28	0.701	17.81	0.565	14.36	5.22	23.23	5.66	0.99	**C0294-032-1625-S**	0.784	19.91	4.14	18.40	4.92	0.86
C0294-032-1750-M	0.294	7.47	0.032	0.81	1.750	44.45	0.752	19.11	0.605	15.37	5.22	23.23	5.24	0.92	**C0294-032-1750-S**	0.841	21.37	4.14	18.40	4.55	0.80
C0294-032-1875-M	0.294	7.47	0.032	0.81	1.875	47.63	0.803	20.41	0.645	16.38	5.22	23.23	4.87	0.85	**C0294-032-1875-S**	0.899	22.84	4.14	18.40	4.24	0.74
C0294-032-2000-M	0.294	7.47	0.032	0.81	2.000	50.80	0.854	21.70	0.685	17.40	5.22	23.23	4.56	0.80	**C0294-032-2000-S**	0.957	24.30	4.14	18.40	3.97	0.69
C0294-032-2125-M	0.294	7.47	0.032	0.81	2.125	53.98	0.905	23.00	0.725	18.41	5.22	23.23	4.28	0.75	**C0294-032-2125-S**	1.014	25.76	4.14	18.40	3.72	0.65
C0294-032-2250-M	0.294	7.47	0.032	0.81	2.250	57.15	0.956	24.29	0.765	19.42	5.22	23.23	4.04	0.71	**C0294-032-2250-S**	1.072	27.23	4.14	18.40	3.51	0.61
C0294-032-2375-M	0.294	7.47	0.032	0.81	2.375	60.33	1.008	25.59	0.804	20.43	5.22	23.23	3.82	0.67	**C0294-032-2375-S**	1.130	28.69	4.14	18.40	3.32	0.58
C0294-032-2500-M	0.294	7.47	0.032	0.81	2.500	63.50	1.059	26.89	0.844	21.45	5.22	23.23	3.62	0.63	**C0294-032-2500-S**	1.187	30.15	4.14	18.40	3.15	0.55
C0294-032-2625-M	0.294	7.47	0.032	0.81	2.625	66.68	1.110	28.18	0.884	22.46	5.22	23.23	3.45	0.60	**C0294-032-2625-S**	1.245	31.62	4.14	18.40	3.00	0.52
C0294-032-2750-M	0.294	7.47	0.032	0.81	2.750	69.85	1.161	29.48	0.924	23.47	5.22	23.23	3.29	0.58	**C0294-032-2750-S**	1.302	33.08	4.14	18.40	2.86	0.50
C0294-032-2875-M	0.294	7.47	0.032	0.81	2.875	73.03	1.212	30.78	0.964	24.49	5.22	23.23	3.14	0.55	**C0294-032-2875-S**	1.360	34.55	4.14	18.40	2.73	0.48
C0294-032-3000-M	0.294	7.47	0.032	0.81	3.000	76.20	1.263	32.07	1.004	25.50	5.22	23.23	3.01	0.53	**C0294-032-3000-S**	1.418	36.01	4.14	18.40	2.61	0.46
C0294-032-3250-M	0.294	7.47	0.032	0.81	3.250	82.55	1.365	34.66	1.084	27.52	5.22	23.23	2.77	0.48	**C0294-032-3250-S**	1.533	38.94	4.14	18.40	2.41	0.42
C0294-032-3500-M	0.294	7.47	0.032	0.81	3.500	88.90	1.467	37.26	1.163	29.55	5.22	23.23	2.57	0.45	**C0294-032-3500-S**	1.648	41.87	4.14	18.40	2.23	0.39
C0294-032-3750-M	0.294	7.47	0.032	0.81	3.750	95.25	1.569	39.85	1.243	31.58	5.22	23.23	2.40	0.42	**C0294-032-3750-S**	1.764	44.79	4.14	18.40	2.08	0.36
C0294-032-4000-M	0.294	7.47	0.032	0.81	4.000	101.60	1.671	42.44	1.323	33.60	5.22	23.23	2.24	0.39	**C0294-032-4000-S**	1.879	47.72	4.14	18.40	1.95	0.34
C0294-032-4250-M	0.294	7.47	0.032	0.81	4.250	107.95	1.773	45.03	1.403	35.63	5.22	23.23	2.11	0.37	**C0294-032-4250-S**	1.994	50.65	4.14	18.40	1.83	0.32
C0294-032-4500-M	0.294	7.47	0.032	0.81	4.500	114.30	1.875	47.63	1.482	37.65	5.22	23.23	1.99	0.35	**C0294-032-4500-S**	2.109	53.58	4.14	18.40	1.73	0.30
C0294-032-4750-M	0.294	7.47	0.032	0.81	4.750	120.65	1.977	50.22	1.562	39.68	5.22	23.23	1.88	0.33	**C0294-032-4750-S**	2.225	56.51	4.14	18.40	1.64	0.29
C0294-032-5000-M	0.294	7.47	0.032	0.81	5.000	127.00	2.079	52.81	1.642	41.71	5.22	23.23	1.79	0.31	**C0294-032-5000-S**	2.340	59.43	4.14	18.40	1.56	0.27
C0294-035-0500-M	0.294	7.47	0.035	0.89	0.500	12.70	0.264	6.72	0.234	5.94	6.70	29.79	28.43	4.98	**C0294-035-0500-S**	0.285	7.24	5.31	23.64	24.72	4.33
C0294-035-0563-M	0.294	7.47	0.035	0.89	0.563	14.29	0.293	7.43	0.257	6.54	6.70	29.79	24.82	4.34	**C0294-035-0563-S**	0.316	8.03	5.31	23.64	21.59	3.78
C0294-035-0625-M	0.294	7.47	0.035	0.89	0.625	15.88	0.321	8.15	0.281	7.13	6.70	29.79	22.03	3.85	**C0294-035-0625-S**	0.348	8.83	5.31	23.64	19.15	3.35
C0294-035-0688-M	0.294	7.47	0.035	0.89	0.688	17.46	0.349	8.87	0.304	7.72	6.70	29.79	19.80	3.46	**C0294-035-0688-S**	0.379	9.62	5.31	23.64	17.22	3.01
C0294-035-0750-M	0.294	7.47	0.035	0.89	0.750	19.05	0.377	9.59	0.327	8.31	6.70	29.79	17.98	3.15	**C0294-035-0750-S**	0.410	10.42	5.31	23.64	15.63	2.74
C0294-035-0813-M	0.294	7.47	0.035	0.89	0.813	20.64	0.406	10.31	0.351	8.91	6.70	29.79	16.47	2.88	**C0294-035-0813-S**	0.441	11.21	5.31	23.64	14.32	2.51
C0294-035-0875-M	0.294	7.47	0.035	0.89	0.875	22.23	0.434	11.02	0.374	9.50	6.70	29.79	15.19	2.66	**C0294-035-0875-S**	0.473	12.00	5.31	23.64	13.21	2.31
C0294-035-0938-M	0.294	7.47	0.035	0.89	0.938	23.81	0.462	11.74	0.397	10.09	6.70	29.79	14.09	2.47	**C0294-035-0938-S**	0.504	12.80	5.31	23.64	12.25	2.14
C0294-035-1000-M	0.294	7.47	0.035	0.89	1.000	25.40	0.490	12.46	0.421	10.68	6.70	29.79	13.15	2.30	**C0294-035-1000-S**	0.535	13.59	5.31	23.64	11.43	2.00
C0294-035-1125-M	0.294	7.47	0.035	0.89	1.125	28.58	0.547	13.89	0.467	11.87	6.70	29.79	11.59	2.03	**C0294-035-1125-S**	0.598	15.18	5.31	23.64	10.08	1.76
C0294-035-1250-M	0.294	7.47	0.035	0.89	1.250	31.75	0.604	15.33	0.514	13.05	6.70	29.79	10.36	1.81	**C0294-035-1250-S**	0.660	16.77	5.31	23.64	9.01	1.58
C0294-035-1375-M	0.294	7.47	0.035	0.89	1.375	34.93	0.660	16.77	0.561	14.24	6.70	29.79	9.37	1.64	**C0294-035-1375-S**	0.723	18.35	5.31	23.64	8.15	1.43
C0294-035-1500-M	0.294	7.47	0.035	0.89	1.500	38.10	0.717	18.20	0.607	15.42	6.70	29.79	8.55	1.50	**C0294-035-1500-S**	0.785	19.94	5.31	23.64	7.43	1.30
C0294-035-1625-M	0.294	7.47	0.035	0.89	1.625	41.28	0.773	19.64	0.654	16.61	6.70	29.79	7.86	1.38	**C0294-035-1625-S**	0.848	21.53	5.31	23.64	6.84	1.20
C0294-035-1750-M	0.294	7.47	0.035	0.89	1.750	44.45	0.830	21.07	0.701	17.79	6.70	29.79	7.28	1.27	**C0294-035-1750-S**	0.910	23.12	5.31	23.64	6.33	1.11
C0294-035-1875-M	0.294	7.47	0.035	0.89	1.875	47.63	0.886	22.51	0.747	18.98	6.70	29.79	6.77	1.19	**C0294-035-1875-S**	0.973	24.71	5.31	23.64	5.89	1.03
C0294-035-2000-M	0.294	7.47	0.035	0.89	2.000	50.80	0.943	23.94	0.794	20.16	6.70	29.79	6.33	1.11	**C0294-035-2000-S**	1.035	26.29	5.31	23.64	5.51	0.96
C0294-035-2125-M	0.294	7.47	0.035	0.89	2.125	53.98	0.999	25.38	0.841	21.35	6.70	29.79	5.95	1.04	**C0294-035-2125-S**	1.098	27.88	5.31	23.64	5.17	0.91
C0294-035-2250-M	0.294	7.47	0.035	0.89	2.250	57.15	1.056	26.81	0.887	22.53	6.70	29.79	5.61	0.98	**C0294-035-2250-S**	1.160	29.47	5.31	23.64	4.88	0.85
C0294-035-2375-M	0.294	7.47	0.035	0.89	2.375	60.33	1.112	28.25	0.934	23.72	6.70	29.79	5.30	0.93	**C0294-035-2375-S**	1.223	31.06	5.31	23.64	4.61	0.81
C0294-035-2500-M	0.294	7.47	0.035	0.89	2.500	63.50	1.169	29.69	0.980	24.90	6.70	29.79	5.03	0.88	**C0294-035-2500-S**	1.285	32.64	5.31	23.64	4.38	0.77
C0294-035-2625-M	0.294	7.47	0.035	0.89	2.625	66.68	1.225	31.12	1.027	26.09	6.70	29.79	4.79	0.84	**C0294-035-2625-S**	1.348	34.23	5.31	23.64	4.16	0.73
C0294-035-2750-M	0.294	7.47	0.035	0.89	2.750	69.85	1.282	32.56	1.074	27.27	6.70	29.79	4.56	0.80	**C0294-035-2750-S**	1.410	35.82	5.31	23.64	3.97	0.69
C0294-035-2875-M	0.294	7.47	0.035	0.89	2.875	73.03	1.338	33.99	1.120	28.46	6.70	29.79	4.36	0.76	**C0294-035-2875-S**	1.473	37.41	5.31	23.64	3.79	0.66
C0294-035-3000-M	0.294	7.47	0.035	0.89	3.000	76.20	1.395	35.43	1.167	29.64	6.70	29.79	4.17	0.73	**C0294-035-3000-S**	1.535	38.99	5.31	23.64	3.63	0.63
C0294-035-3250-M	0.294	7.47	0.035	0.89	3.250	82.55	1.508	38.30	1.260	32.01	6.70	29.79	3.84	0.67	**C0294-035-3250-S**	1.660	42.17	5.31	23.64	3.34	0.59
C0294-035-3500-M	0.294	7.47	0.035	0.89	3.500	88.90	1.621	41.17	1.354	34.38	6.70	29.79	3.56	0.62	**C0294-035-3500-S**	1.785	45.35	5.31	23.64	3.10	0.54

FOR INFORMATION ON ALTERNATIVE FINISHES, SEE PAGE 311

Part Numbers with an "*" are squared and not ground. **Part Numbers in bold** represent the newly expanded Associated Spring RAYMOND compression spring offering.

(OD) 0.294 - 0.294

MUSIC WIRE															STAINLESS STEEL						
Catalog #	Outside Diameter (OD)		Wire Diameter (d)		Free Length (L) Approx		Load Length (L_1)		Solid Height (Sh) Approx		Load (P) at L_1		Spring Rate (R)		Catalog #	Load Length (L_1)		Load (P) at L_1		Spring Rate (R)	
	in	mm	in	mm	in	mm	in	mm	in	mm	lb	N	lb/in	N/mm		in	mm	lb	N	lb/in	N/mm
C0294-035-3750-M	0.294	7.47	0.035	0.89	3.750	95.25	1.734	44.04	1.447	36.75	6.70	29.79	3.32	0.58	C0294-035-3750-S	1.910	48.52	5.31	23.64	2.89	0.51
C0294-035-4000-M	0.294	7.47	0.035	0.89	4.000	101.60	1.847	46.91	1.540	39.12	6.70	29.79	3.11	0.54	C0294-035-4000-S	2.035	51.70	5.31	23.64	2.71	0.47
C0294-035-4250-M	0.294	7.47	0.035	0.89	4.250	107.95	1.960	49.78	1.634	41.49	6.70	29.79	2.93	0.51	C0294-035-4250-S	2.160	54.87	5.31	23.64	2.54	0.45
C0294-035-4500-M	0.294	7.47	0.035	0.89	4.500	114.30	2.073	52.65	1.727	43.86	6.70	29.79	2.76	0.48	C0294-035-4500-S	2.285	58.05	5.31	23.64	2.40	0.42
C0294-035-4750-M	0.294	7.47	0.035	0.89	4.750	120.65	2.186	55.53	1.820	46.23	6.70	29.79	2.61	0.46	C0294-035-4750-S	2.410	61.22	5.31	23.64	2.27	0.40
C0294-035-5000-M	0.294	7.47	0.035	0.89	5.000	127.00	2.299	58.40	1.914	48.60	6.70	29.79	2.48	0.43	C0294-035-5000-S	2.535	64.40	5.31	23.64	2.16	0.38
C0294-038-0500-M	0.294	7.47	0.038	0.97	0.500	12.70	0.286	7.27	0.261	6.63	8.41	37.39	39.34	6.88	C0294-038-0500-S	0.305	7.74	6.68	29.71	34.21	5.99
C0294-038-0563-M	0.294	7.47	0.038	0.97	0.563	14.29	0.317	8.06	0.288	7.31	8.41	37.39	34.28	6.00	C0294-038-0563-S	0.338	8.60	6.68	29.71	29.81	5.22
C0294-038-0625-M	0.294	7.47	0.038	0.97	0.625	15.88	0.348	8.85	0.314	7.99	8.41	37.39	30.38	5.32	C0294-038-0625-S	0.372	9.45	6.68	29.71	26.42	4.62
C0294-038-0688-M	0.294	7.47	0.038	0.97	0.688	17.46	0.379	9.63	0.341	8.67	8.41	37.39	27.28	4.77	C0294-038-0688-S	0.406	10.31	6.68	29.71	23.72	4.15
C0294-038-0750-M	0.294	7.47	0.038	0.97	0.750	19.05	0.410	10.42	0.368	9.34	8.41	37.39	24.75	4.33	C0294-038-0750-S	0.440	11.17	6.68	29.71	21.52	3.77
C0294-038-0813-M	0.294	7.47	0.038	0.97	0.813	20.64	0.441	11.21	0.395	10.02	8.41	37.39	22.65	3.96	C0294-038-0813-S	0.473	12.02	6.68	29.71	19.69	3.45
C0294-038-0875-M	0.294	7.47	0.038	0.97	0.875	22.23	0.472	12.00	0.421	10.70	8.41	37.39	20.88	3.65	C0294-038-0875-S	0.507	12.88	6.68	29.71	18.15	3.18
C0294-038-0938-M	0.294	7.47	0.038	0.97	0.938	23.81	0.503	12.78	0.448	11.38	8.41	37.39	19.36	3.39	C0294-038-0938-S	0.541	13.73	6.68	29.71	16.84	2.95
C0294-038-1000-M	0.294	7.47	0.038	0.97	1.000	25.40	0.534	13.57	0.475	12.06	8.41	37.39	18.05	3.16	C0294-038-1000-S	0.574	14.59	6.68	29.71	15.70	2.75
C0294-038-1125-M	0.294	7.47	0.038	0.97	1.125	28.58	0.596	15.15	0.528	13.41	8.41	37.39	15.90	2.78	C0294-038-1125-S	0.642	16.30	6.68	29.71	13.83	2.42
C0294-038-1250-M	0.294	7.47	0.038	0.97	1.250	31.75	0.658	16.72	0.582	14.77	8.41	37.39	14.21	2.49	C0294-038-1250-S	0.709	18.02	6.68	29.71	12.35	2.16
C0294-038-1375-M	0.294	7.47	0.038	0.97	1.375	34.93	0.720	18.30	0.635	16.13	8.41	37.39	12.84	2.25	C0294-038-1375-S	0.777	19.73	6.68	29.71	11.17	1.95
C0294-038-1500-M	0.294	7.47	0.038	0.97	1.500	38.10	0.782	19.87	0.688	17.49	8.41	37.39	11.71	2.05	C0294-038-1500-S	0.844	21.44	6.68	29.71	10.19	1.78
C0294-038-1625-M	0.294	7.47	0.038	0.97	1.625	41.28	0.844	21.44	0.742	18.84	8.41	37.39	10.77	1.88	C0294-038-1625-S	0.912	23.16	6.68	29.71	9.36	1.64
C0294-038-1750-M	0.294	7.47	0.038	0.97	1.750	44.45	0.906	23.02	0.795	20.20	8.41	37.39	9.96	1.74	C0294-038-1750-S	0.979	24.87	6.68	29.71	8.66	1.52
C0294-038-1875-M	0.294	7.47	0.038	0.97	1.875	47.63	0.968	24.59	0.849	21.56	8.41	37.39	9.27	1.62	C0294-038-1875-S	1.046	26.58	6.68	29.71	8.06	1.41
C0294-038-2000-M	0.294	7.47	0.038	0.97	2.000	50.80	1.030	26.17	0.902	22.91	8.41	37.39	8.67	1.52	C0294-038-2000-S	1.114	28.29	6.68	29.71	7.54	1.32
C0294-038-2125-M	0.294	7.47	0.038	0.97	2.125	53.98	1.092	27.74	0.956	24.27	8.41	37.39	8.14	1.42	C0294-038-2125-S	1.181	30.01	6.68	29.71	7.08	1.24
C0294-038-2250-M	0.294	7.47	0.038	0.97	2.250	57.15	1.154	29.32	1.009	25.63	8.41	37.39	7.67	1.34	C0294-038-2250-S	1.249	31.72	6.68	29.71	6.67	1.17
C0294-038-2375-M	0.294	7.47	0.038	0.97	2.375	60.33	1.216	30.89	1.062	26.98	8.41	37.39	7.26	1.27	C0294-038-2375-S	1.316	33.43	6.68	29.71	6.31	1.10
C0294-038-2500-M	0.294	7.47	0.038	0.97	2.500	63.50	1.278	32.47	1.116	28.34	8.41	37.39	6.88	1.20	C0294-038-2500-S	1.384	35.14	6.68	29.71	5.98	1.05
C0294-038-2625-M	0.294	7.47	0.038	0.97	2.625	66.68	1.340	34.04	1.169	29.70	8.41	37.39	6.54	1.15	C0294-038-2625-S	1.451	36.86	6.68	29.71	5.69	1.00
C0294-038-2750-M	0.294	7.47	0.038	0.97	2.750	69.85	1.402	35.62	1.223	31.06	8.41	37.39	6.24	1.09	C0294-038-2750-S	1.519	38.57	6.68	29.71	5.42	0.95
C0294-038-2875-M	0.294	7.47	0.038	0.97	2.875	73.03	1.464	37.19	1.276	32.41	8.41	37.39	5.96	1.04	C0294-038-2875-S	1.586	40.28	6.68	29.71	5.18	0.91
C0294-038-3000-M	0.294	7.47	0.038	0.97	3.000	76.20	1.526	38.77	1.330	33.77	8.41	37.39	5.70	1.00	C0294-038-3000-S	1.653	42.00	6.68	29.71	4.96	0.87
C0294-038-3250-M	0.294	7.47	0.038	0.97	3.250	82.55	1.650	41.92	1.436	36.48	8.41	37.39	5.26	0.92	C0294-038-3250-S	1.788	45.42	6.68	29.71	4.57	0.80
C0294-038-3500-M	0.294	7.47	0.038	0.97	3.500	88.90	1.774	45.07	1.543	39.20	8.41	37.39	4.87	0.85	C0294-038-3500-S	1.923	48.85	6.68	29.71	4.24	0.74
C0294-038-3750-M	0.294	7.47	0.038	0.97	3.750	95.25	1.898	48.22	1.650	41.91	8.41	37.39	4.54	0.79	C0294-038-3750-S	2.058	52.27	6.68	29.71	3.95	0.69
C0294-038-4000-M	0.294	7.47	0.038	0.97	4.000	101.60	2.022	51.37	1.757	44.63	8.41	37.39	4.25	0.74	C0294-038-4000-S	2.193	55.70	6.68	29.71	3.70	0.65
C0294-038-4250-M	0.294	7.47	0.038	0.97	4.250	107.95	2.146	54.51	1.864	47.34	8.41	37.39	4.00	0.70	C0294-038-4250-S	2.328	59.12	6.68	29.71	3.48	0.61
C0294-038-4500-M	0.294	7.47	0.038	0.97	4.500	114.30	2.270	57.66	1.971	50.05	8.41	37.39	3.77	0.66	C0294-038-4500-S	2.463	62.55	6.68	29.71	3.28	0.57
C0294-038-4750-M	0.294	7.47	0.038	0.97	4.750	120.65	2.394	60.81	2.077	52.77	8.41	37.39	3.57	0.62	C0294-038-4750-S	2.597	65.97	6.68	29.71	3.10	0.54
C0294-038-5000-M	0.294	7.47	0.038	0.97	5.000	127.00	2.518	63.96	2.184	55.48	8.41	37.39	3.39	0.59	C0294-038-5000-S	2.732	69.40	6.68	29.71	2.95	0.52
C0294-040-0500-M	0.294	7.47	0.040	1.02	0.500	12.70	0.300	7.63	0.278	7.07	9.68	43.06	48.51	8.49	C0294-040-0500-S	0.318	8.06	7.70	34.24	42.18	7.38
C0294-040-0563-M	0.294	7.47	0.040	1.02	0.563	14.29	0.333	8.46	0.307	7.81	9.68	43.06	42.22	7.39	C0294-040-0563-S	0.353	8.96	7.70	34.24	36.72	6.43
C0294-040-0625-M	0.294	7.47	0.040	1.02	0.625	15.88	0.366	9.30	0.336	8.54	9.68	43.06	37.38	6.54	C0294-040-0625-S	0.388	9.86	7.70	34.24	32.51	5.69
C0294-040-0688-M	0.294	7.47	0.040	1.02	0.688	17.46	0.399	10.13	0.365	9.28	9.68	43.06	33.54	5.87	C0294-040-0688-S	0.424	10.76	7.70	34.24	29.16	5.10
C0294-040-0750-M	0.294	7.47	0.040	1.02	0.750	19.05	0.432	10.96	0.394	10.01	9.68	43.06	30.41	5.32	C0294-040-0750-S	0.459	11.66	7.70	34.24	26.44	4.63
C0294-040-0813-M	0.294	7.47	0.040	1.02	0.813	20.64	0.464	11.80	0.423	10.75	9.68	43.06	27.81	4.87	C0294-040-0813-S	0.494	12.55	7.70	34.24	24.18	4.23
C0294-040-0875-M	0.294	7.47	0.040	1.02	0.875	22.23	0.497	12.63	0.452	11.48	9.68	43.06	25.63	4.48	C0294-040-0875-S	0.530	13.45	7.70	34.24	22.28	3.90
C0294-040-0938-M	0.294	7.47	0.040	1.02	0.938	23.81	0.530	13.46	0.481	12.22	9.68	43.06	23.76	4.16	C0294-040-0938-S	0.565	14.35	7.70	34.24	20.66	3.62
C0294-040-1000-M	0.294	7.47	0.040	1.02	1.000	25.40	0.563	14.30	0.510	12.95	9.68	43.06	22.14	3.88	C0294-040-1000-S	0.600	15.25	7.70	34.24	19.26	3.37
C0294-040-1125-M	0.294	7.47	0.040	1.02	1.125	28.58	0.628	15.96	0.568	14.42	9.68	43.06	19.50	3.41	C0294-040-1125-S	0.671	17.04	7.70	34.24	16.95	2.97
C0294-040-1250-M	0.294	7.47	0.040	1.02	1.250	31.75	0.694	17.63	0.626	15.89	9.68	43.06	17.41	3.05	C0294-040-1250-S	0.742	18.84	7.70	34.24	15.14	2.65
C0294-040-1375-M	0.294	7.47	0.040	1.02	1.375	34.93	0.760	19.29	0.684	17.36	9.68	43.06	15.73	2.75	C0294-040-1375-S	0.812	20.63	7.70	34.24	13.68	2.39
C0294-040-1500-M	0.294	7.47	0.040	1.02	1.500	38.10	0.825	20.96	0.741	18.83	9.68	43.06	14.35	2.51	C0294-040-1500-S	0.883	22.43	7.70	34.24	12.48	2.18
C0294-040-1625-M	0.294	7.47	0.040	1.02	1.625	41.28	0.891	22.63	0.799	20.30	9.68	43.06	13.19	2.31	C0294-040-1625-S	0.954	24.22	7.70	34.24	11.47	2.01
C0294-040-1750-M	0.294	7.47	0.040	1.02	1.750	44.45	0.956	24.29	0.857	21.77	9.68	43.06	12.20	2.13	C0294-040-1750-S	1.024	26.02	7.70	34.24	10.61	1.86
C0294-040-1875-M	0.294	7.47	0.040	1.02	1.875	47.63	1.022	25.96	0.915	23.24	9.68	43.06	11.35	1.99	C0294-040-1875-S	1.095	27.81	7.70	34.24	9.87	1.73
C0294-040-2000-M	0.294	7.47	0.040	1.02	2.000	50.80	1.088	27.62	0.973	24.71	9.68	43.06	10.61	1.86	C0294-040-2000-S	1.166	29.61	7.70	34.24	9.23	1.61
C0294-040-2125-M	0.294	7.47	0.040	1.02	2.125	53.98	1.153	29.29	1.031	26.18	9.68	43.06	9.96	1.74	C0294-040-2125-S	1.236	31.41	7.70	34.24	8.66	1.52
C0294-040-2250-M	0.294	7.47	0.040	1.02	2.250	57.15	1.219	30.96	1.089	27.65	9.68	43.06	9.39	1.64	C0294-040-2250-S	1.307	33.20	7.70	34.24	8.16	1.43
C0294-040-2375-M	0.294	7.47	0.040	1.02	2.375	60.33	1.284	32.62	1.147	29.12	9.68	43.06	8.88	1.55	C0294-040-2375-S	1.378	35.00	7.70	34.24	7.72	1.35
C0294-040-2500-M	0.294	7.47	0.040	1.02	2.500	63.50	1.350	34.29	1.204	30.59	9.68	43.06	8.42	1.47	C0294-040-2500-S	1.448	36.79	7.70	34.24	7.32	1.28
C0294-040-2625-M	0.294	7.47	0.040	1.02	2.625	66.68	1.416	35.96	1.262	32.06	9.68	43.06	8.01	1.40	C0294-040-2625-S	1.519	38.59	7.70	34.24	6.96	1.22
C0294-040-2750-M	0.294	7.47	0.040	1.02	2.750	69.85	1.481	37.62	1.320	33.53	9.68	43.06	7.63	1.34	C0294-040-2750-S	1.590	40.38	7.70	34.24	6.64	1.16
C0294-040-2875-M	0.294	7.47	0.040	1.02	2.875	73.03	1.547	39.29	1.378	35.00	9.68	43.06	7.29	1.28	C0294-040-2875-S	1.661	42.18	7.70	34.24	6.34	1.11
C0294-040-3000-M	0.294	7.47	0.040	1.02	3.000	76.20	1.612	40.95	1.436	36.47	9.68	43.06	6.98	1.22	C0294-040-3000-S	1.731	43.97	7.70	34.24	6.07	1.06

Part Numbers with an "*" are squared and not ground. **Part Numbers in bold** represent the newly expanded Associated Spring RAYMOND compression spring offering.

MUSIC WIRE															STAINLESS STEEL						
Catalog #	Outside Diameter (OD)		Wire Diameter (d)		Free Length (L) Approx		Load Length (L_1)		Solid Height (Sh) Approx		Load (P) at L_1		Spring Rate (R)		Catalog #	Load Length (L_1)		Load (P) at L_1		Spring Rate (R)	
	in	mm	in	mm	in	mm	in	mm	in	mm	lb	N	lb/in	N/mm		in	mm	lb	N	lb/in	N/mm
C0294-040-3250-M	**0.294**	**7.47**	**0.040**	**1.02**	**3.250**	**82.55**	**1.744**	**44.29**	**1.552**	**39.41**	**9.68**	**43.06**	**6.43**	**1.12**	**C0294-040-3250-S**	**1.873**	**47.56**	**7.70**	**34.24**	**5.59**	**0.98**
C0294-040-3500-M	**0.294**	**7.47**	**0.040**	**1.02**	**3.500**	**88.90**	**1.875**	**47.62**	**1.667**	**42.35**	**9.68**	**43.06**	**5.96**	**1.04**	**C0294-040-3500-S**	**2.014**	**51.15**	**7.70**	**34.24**	**5.18**	**0.91**
C0294-040-3750-M	**0.294**	**7.47**	**0.040**	**1.02**	**3.750**	**95.25**	**2.006**	**50.95**	**1.783**	**45.29**	**9.68**	**43.06**	**5.55**	**0.97**	**C0294-040-3750-S**	**2.155**	**54.75**	**7.70**	**34.24**	**4.83**	**0.84**
C0294-040-4000-M	**0.294**	**7.47**	**0.040**	**1.02**	**4.000**	**101.60**	**2.137**	**54.28**	**1.899**	**48.23**	**9.68**	**43.06**	**5.20**	**0.91**	**C0294-040-4000-S**	**2.297**	**58.34**	**7.70**	**34.24**	**4.52**	**0.79**
C0294-040-4250-M	**0.294**	**7.47**	**0.040**	**1.02**	**4.250**	**107.95**	**2.268**	**57.62**	**2.015**	**51.17**	**9.68**	**43.06**	**4.89**	**0.85**	**C0294-040-4250-S**	**2.438**	**61.93**	**7.70**	**34.24**	**4.25**	**0.74**
C0294-040-4500-M	**0.294**	**7.47**	**0.040**	**1.02**	**4.500**	**114.30**	**2.400**	**60.95**	**2.130**	**54.11**	**9.68**	**43.06**	**4.61**	**0.81**	**C0294-040-4500-S**	**2.579**	**65.52**	**7.70**	**34.24**	**4.01**	**0.70**
C0294-040-4750-M	**0.294**	**7.47**	**0.040**	**1.02**	**4.750**	**120.65**	**2.531**	**64.28**	**2.246**	**57.05**	**9.68**	**43.06**	**4.36**	**0.76**	**C0294-040-4750-S**	**2.721**	**69.11**	**7.70**	**34.24**	**3.79**	**0.66**
C0294-040-5000-M	**0.294**	**7.47**	**0.040**	**1.02**	**5.000**	**127.00**	**2.662**	**67.61**	**2.362**	**59.99**	**9.68**	**43.06**	**4.14**	**0.72**	**C0294-040-5000-S**	**2.862**	**72.70**	**7.70**	**34.24**	**3.60**	**0.63**
C0294-042-0500-M	**0.294**	**7.47**	**0.042**	**1.07**	**0.500**	**12.70**	**0.314**	**7.98**	**0.295**	**7.50**	**11.07**	**49.23**	**59.52**	**10.42**	**C0294-042-0500-S**	**0.330**	**8.38**	**8.80**	**39.16**	**51.76**	**9.06**
C0294-042-0563-M	**0.294**	**7.47**	**0.042**	**1.07**	**0.563**	**14.29**	**0.349**	**8.85**	**0.326**	**8.29**	**11.07**	**49.23**	**51.75**	**9.06**	**C0294-042-0563-S**	**0.367**	**9.32**	**8.80**	**39.16**	**45.00**	**7.87**
C0294-042-0625-M	**0.294**	**7.47**	**0.042**	**1.07**	**0.625**	**15.88**	**0.383**	**9.73**	**0.358**	**9.08**	**11.07**	**49.23**	**45.77**	**8.01**	**C0294-042-0625-S**	**0.404**	**10.26**	**8.80**	**39.16**	**39.80**	**6.96**
C0294-042-0688-M	**0.294**	**7.47**	**0.042**	**1.07**	**0.688**	**17.46**	**0.418**	**10.61**	**0.389**	**9.87**	**11.07**	**49.23**	**41.03**	**7.18**	**C0294-042-0688-S**	**0.441**	**11.19**	**8.80**	**39.16**	**35.68**	**6.24**
C0294-042-0750-M	**0.294**	**7.47**	**0.042**	**1.07**	**0.750**	**19.05**	**0.452**	**11.49**	**0.420**	**10.66**	**11.07**	**49.23**	**37.18**	**6.51**	**C0294-042-0750-S**	**0.478**	**12.13**	**8.80**	**39.16**	**32.33**	**5.66**
C0294-042-0813-M	**0.294**	**7.47**	**0.042**	**1.07**	**0.813**	**20.64**	**0.487**	**12.37**	**0.451**	**11.45**	**11.07**	**49.23**	**33.99**	**5.95**	**C0294-042-0813-S**	**0.515**	**13.07**	**8.80**	**39.16**	**29.56**	**5.17**
C0294-042-0875-M	**0.294**	**7.47**	**0.042**	**1.07**	**0.875**	**22.23**	**0.521**	**13.24**	**0.482**	**12.24**	**11.07**	**49.23**	**31.30**	**5.48**	**C0294-042-0875-S**	**0.552**	**14.01**	**8.80**	**39.16**	**27.22**	**4.76**
C0294-042-0938-M	**0.294**	**7.47**	**0.042**	**1.07**	**0.938**	**23.81**	**0.556**	**14.12**	**0.513**	**13.03**	**11.07**	**49.23**	**29.01**	**5.08**	**C0294-042-0938-S**	**0.588**	**14.95**	**8.80**	**39.16**	**25.23**	**4.41**
C0294-042-1000-M	**0.294**	**7.47**	**0.042**	**1.07**	**1.000**	**25.40**	**0.591**	**15.00**	**0.544**	**13.82**	**11.07**	**49.23**	**27.03**	**4.73**	**C0294-042-1000-S**	**0.625**	**15.89**	**8.80**	**39.16**	**23.51**	**4.11**
C0294-042-1125-M	**0.294**	**7.47**	**0.042**	**1.07**	**1.125**	**28.58**	**0.660**	**16.76**	**0.606**	**15.40**	**11.07**	**49.23**	**23.79**	**4.16**	**C0294-042-1125-S**	**0.699**	**17.76**	**8.80**	**39.16**	**20.68**	**3.62**
C0294-042-1250-M	**0.294**	**7.47**	**0.042**	**1.07**	**1.250**	**31.75**	**0.729**	**18.51**	**0.669**	**16.98**	**11.07**	**49.23**	**21.24**	**3.72**	**C0294-042-1250-S**	**0.773**	**19.64**	**8.80**	**39.16**	**18.47**	**3.23**
C0294-042-1375-M	**0.294**	**7.47**	**0.042**	**1.07**	**1.375**	**34.93**	**0.798**	**20.27**	**0.731**	**18.56**	**11.07**	**49.23**	**19.18**	**3.36**	**C0294-042-1375-S**	**0.847**	**21.52**	**8.80**	**39.16**	**16.68**	**2.92**
C0294-042-1500-M	**0.294**	**7.47**	**0.042**	**1.07**	**1.500**	**38.10**	**0.867**	**22.02**	**0.793**	**20.15**	**11.07**	**49.23**	**17.49**	**3.06**	**C0294-042-1500-S**	**0.921**	**23.39**	**8.80**	**39.16**	**15.21**	**2.66**
C0294-042-1625-M	**0.294**	**7.47**	**0.042**	**1.07**	**1.625**	**41.28**	**0.936**	**23.78**	**0.855**	**21.73**	**11.07**	**49.23**	**16.07**	**2.81**	**C0294-042-1625-S**	**0.995**	**25.27**	**8.80**	**39.16**	**13.97**	**2.45**
C0294-042-1750-M	**0.294**	**7.47**	**0.042**	**1.07**	**1.750**	**44.45**	**1.005**	**25.53**	**0.918**	**23.31**	**11.07**	**49.23**	**14.86**	**2.60**	**C0294-042-1750-S**	**1.069**	**27.15**	**8.80**	**39.16**	**12.92**	**2.26**
C0294-042-1875-M	**0.294**	**7.47**	**0.042**	**1.07**	**1.875**	**47.63**	**1.074**	**27.29**	**0.980**	**24.89**	**11.07**	**49.23**	**13.83**	**2.42**	**C0294-042-1875-S**	**1.143**	**29.02**	**8.80**	**39.16**	**12.02**	**2.10**
C0294-042-2000-M	**0.294**	**7.47**	**0.042**	**1.07**	**2.000**	**50.80**	**1.144**	**29.05**	**1.042**	**26.47**	**11.07**	**49.23**	**12.92**	**2.26**	**C0294-042-2000-S**	**1.217**	**30.90**	**8.80**	**39.16**	**11.24**	**1.97**
C0294-042-2125-M	**0.294**	**7.47**	**0.042**	**1.07**	**2.125**	**53.98**	**1.213**	**30.80**	**1.104**	**28.05**	**11.07**	**49.23**	**12.13**	**2.12**	**C0294-042-2125-S**	**1.290**	**32.78**	**8.80**	**39.16**	**10.55**	**1.85**
C0294-042-2250-M	**0.294**	**7.47**	**0.042**	**1.07**	**2.250**	**57.15**	**1.282**	**32.56**	**1.166**	**29.63**	**11.07**	**49.23**	**11.43**	**2.00**	**C0294-042-2250-S**	**1.364**	**34.65**	**8.80**	**39.16**	**9.94**	**1.74**
C0294-042-2375-M	**0.294**	**7.47**	**0.042**	**1.07**	**2.375**	**60.33**	**1.351**	**34.31**	**1.229**	**31.21**	**11.07**	**49.23**	**10.81**	**1.89**	**C0294-042-2375-S**	**1.438**	**36.53**	**8.80**	**39.16**	**9.40**	**1.64**
C0294-042-2500-M	**0.294**	**7.47**	**0.042**	**1.07**	**2.500**	**63.50**	**1.420**	**36.07**	**1.291**	**32.79**	**11.07**	**49.23**	**10.25**	**1.79**	**C0294-042-2500-S**	**1.512**	**38.41**	**8.80**	**39.16**	**8.91**	**1.56**
C0294-042-2625-M	**0.294**	**7.47**	**0.042**	**1.07**	**2.625**	**66.68**	**1.489**	**37.82**	**1.353**	**34.37**	**11.07**	**49.23**	**9.75**	**1.71**	**C0294-042-2625-S**	**1.586**	**40.28**	**8.80**	**39.16**	**8.47**	**1.48**
C0294-042-2750-M	**0.294**	**7.47**	**0.042**	**1.07**	**2.750**	**69.85**	**1.558**	**39.58**	**1.415**	**35.95**	**11.07**	**49.23**	**9.29**	**1.63**	**C0294-042-2750-S**	**1.660**	**42.16**	**8.80**	**39.16**	**8.08**	**1.41**
C0294-042-2875-M	**0.294**	**7.47**	**0.042**	**1.07**	**2.875**	**73.03**	**1.627**	**41.34**	**1.478**	**37.53**	**11.07**	**49.23**	**8.87**	**1.55**	**C0294-042-2875-S**	**1.734**	**44.04**	**8.80**	**39.16**	**7.72**	**1.35**
C0294-042-3000-M	**0.294**	**7.47**	**0.042**	**1.07**	**3.000**	**76.20**	**1.697**	**43.09**	**1.540**	**39.11**	**11.07**	**49.23**	**8.49**	**1.49**	**C0294-042-3000-S**	**1.808**	**45.91**	**8.80**	**39.16**	**7.38**	**1.29**
C0294-042-3250-M	**0.294**	**7.47**	**0.042**	**1.07**	**3.250**	**82.55**	**1.835**	**46.60**	**1.664**	**42.27**	**11.07**	**49.23**	**7.82**	**1.37**	**C0294-042-3250-S**	**1.955**	**49.67**	**8.80**	**39.16**	**6.80**	**1.19**
C0294-042-3500-M	**0.294**	**7.47**	**0.042**	**1.07**	**3.500**	**88.90**	**1.973**	**50.12**	**1.789**	**45.43**	**11.07**	**49.23**	**7.25**	**1.27**	**C0294-042-3500-S**	**2.103**	**53.42**	**8.80**	**39.16**	**6.30**	**1.10**
C0294-042-3750-M	**0.294**	**7.47**	**0.042**	**1.07**	**3.750**	**95.25**	**2.111**	**53.63**	**1.913**	**48.60**	**11.07**	**49.23**	**6.75**	**1.18**	**C0294-042-3750-S**	**2.251**	**57.17**	**8.80**	**39.16**	**5.87**	**1.03**
C0294-042-4000-M	**0.294**	**7.47**	**0.042**	**1.07**	**4.000**	**101.60**	**2.250**	**57.14**	**2.038**	**51.76**	**11.07**	**49.23**	**6.32**	**1.11**	**C0294-042-4000-S**	**2.399**	**60.93**	**8.80**	**39.16**	**5.50**	**0.96**
C0294-042-4250-M	**0.294**	**7.47**	**0.042**	**1.07**	**4.250**	**107.95**	**2.388**	**60.65**	**2.162**	**54.92**	**11.07**	**49.23**	**5.94**	**1.04**	**C0294-042-4250-S**	**2.546**	**64.68**	**8.80**	**39.16**	**5.17**	**0.90**
C0294-042-4500-M	**0.294**	**7.47**	**0.042**	**1.07**	**4.500**	**114.30**	**2.526**	**64.16**	**2.287**	**58.08**	**11.07**	**49.23**	**5.61**	**0.98**	**C0294-042-4500-S**	**2.694**	**68.43**	**8.80**	**39.16**	**4.88**	**0.85**
C0294-042-4750-M	**0.294**	**7.47**	**0.042**	**1.07**	**4.750**	**120.65**	**2.664**	**67.67**	**2.411**	**61.24**	**11.07**	**49.23**	**5.31**	**0.93**	**C0294-042-4750-S**	**2.842**	**72.19**	**8.80**	**39.16**	**4.62**	**0.81**
C0294-042-5000-M	**0.294**	**7.47**	**0.042**	**1.07**	**5.000**	**127.00**	**2.803**	**71.18**	**2.535**	**64.40**	**11.07**	**49.23**	**5.04**	**0.88**	**C0294-042-5000-S**	**2.990**	**75.94**	**8.80**	**39.16**	**4.38**	**0.77**
C0294-045-0438-M	**0.294**	**7.47**	**0.045**	**1.14**	**0.438**	**11.11**	**0.296**	**7.53**	**0.285**	**7.24**	**13.37**	**59.45**	**94.69**	**16.57**	**C0294-045-0438-S**	**0.308**	**7.83**	**10.64**	**47.31**	**82.34**	**14.41**
C0294-045-0500-M	**0.294**	**7.47**	**0.045**	**1.14**	**0.500**	**12.70**	**0.333**	**8.47**	**0.319**	**8.11**	**13.37**	**59.45**	**80.26**	**14.05**	**C0294-045-0500-S**	**0.348**	**8.83**	**10.64**	**47.31**	**69.79**	**12.21**
C0294-045-0563-M	**0.294**	**7.47**	**0.045**	**1.14**	**0.563**	**14.29**	**0.371**	**9.41**	**0.354**	**8.98**	**13.37**	**59.45**	**69.64**	**12.19**	**C0294-045-0563-S**	**0.387**	**9.83**	**10.64**	**47.31**	**60.56**	**10.60**
C0294-045-0625-M	**0.294**	**7.47**	**0.045**	**1.14**	**0.625**	**15.88**	**0.408**	**10.36**	**0.388**	**9.85**	**13.37**	**59.45**	**61.51**	**10.76**	**C0294-045-0625-S**	**0.426**	**10.82**	**10.64**	**47.31**	**53.48**	**9.36**
C0294-045-0688-M	**0.294**	**7.47**	**0.045**	**1.14**	**0.688**	**17.46**	**0.445**	**11.30**	**0.422**	**10.72**	**13.37**	**59.45**	**55.07**	**9.64**	**C0294-045-0688-S**	**0.465**	**11.82**	**10.64**	**47.31**	**47.89**	**8.38**
C0294-045-0750-M	**0.294**	**7.47**	**0.045**	**1.14**	**0.750**	**19.05**	**0.482**	**12.24**	**0.456**	**11.59**	**13.37**	**59.45**	**49.86**	**8.72**	**C0294-045-0750-S**	**0.505**	**12.82**	**10.64**	**47.31**	**43.35**	**7.59**
C0294-045-0813-M	**0.294**	**7.47**	**0.045**	**1.14**	**0.813**	**20.64**	**0.519**	**13.18**	**0.491**	**12.46**	**13.37**	**59.45**	**45.55**	**7.97**	**C0294-045-0813-S**	**0.544**	**13.82**	**10.64**	**47.31**	**39.60**	**6.93**
C0294-045-0875-M	**0.294**	**7.47**	**0.045**	**1.14**	**0.875**	**22.23**	**0.556**	**14.13**	**0.525**	**13.33**	**13.37**	**59.45**	**41.92**	**7.34**	**C0294-045-0875-S**	**0.583**	**14.81**	**10.64**	**47.31**	**36.45**	**6.38**
C0294-045-0938-M	**0.294**	**7.47**	**0.045**	**1.14**	**0.938**	**23.81**	**0.593**	**15.07**	**0.559**	**14.20**	**13.37**	**59.45**	**38.83**	**6.79**	**C0294-045-0938-S**	**0.622**	**15.81**	**10.64**	**47.31**	**33.76**	**5.91**
C0294-045-1000-M	**0.294**	**7.47**	**0.045**	**1.14**	**1.000**	**25.40**	**0.630**	**16.01**	**0.593**	**15.07**	**13.37**	**59.45**	**36.16**	**6.33**	**C0294-045-1000-S**	**0.662**	**16.81**	**10.64**	**47.31**	**31.44**	**5.50**
C0294-045-1125-M	**0.294**	**7.47**	**0.045**	**1.14**	**1.125**	**28.58**	**0.705**	**17.90**	**0.662**	**16.81**	**13.37**	**59.45**	**31.79**	**5.56**	**C0294-045-1125-S**	**0.740**	**18.80**	**10.64**	**47.31**	**27.65**	**4.84**
C0294-045-1250-M	**0.294**	**7.47**	**0.045**	**1.14**	**1.250**	**31.75**	**0.779**	**19.78**	**0.730**	**18.55**	**13.37**	**59.45**	**28.37**	**4.96**	**C0294-045-1250-S**	**0.819**	**20.80**	**10.64**	**47.31**	**24.67**	**4.32**
C0294-045-1375-M	**0.294**	**7.47**	**0.045**	**1.14**	**1.375**	**34.93**	**0.853**	**21.67**	**0.799**	**20.30**	**13.37**	**59.45**	**25.61**	**4.48**	**C0294-045-1375-S**	**0.897**	**22.79**	**10.64**	**47.31**	**22.27**	**3.90**
C0294-045-1500-M	**0.294**	**7.47**	**0.045**	**1.14**	**1.500**	**38.10**	**0.927**	**23.55**	**0.868**	**22.04**	**13.37**	**59.45**	**23.34**	**4.08**	**C0294-045-1500-S**	**0.976**	**24.79**	**10.64**	**47.31**	**20.29**	**3.55**
C0294-045-1625-M	**0.294**	**7.47**	**0.045**	**1.14**	**1.625**	**41.28**	**1.002**	**25.44**	**0.936**	**23.78**	**13.37**	**59.45**	**21.44**	**3.75**	**C0294-045-1625-S**	**1.054**	**26.78**	**10.64**	**47.31**	**18.64**	**3.26**
C0294-045-1750-M	**0.294**	**7.47**	**0.045**	**1.14**	**1.750**	**44.45**	**1.076**	**27.32**	**1.005**	**25.52**	**13.37**	**59.45**	**19.82**	**3.47**	**C0294-045-1750-S**	**1.133**	**28.78**	**10.64**	**47.31**	**17.24**	**3.02**
C0294-045-1875-M	**0.294**	**7.47**	**0.045**	**1.14**	**1.875**	**47.63**	**1.150**	**29.21**	**1.073**	**27.26**	**13.37**	**59.45**	**18.44**	**3.23**	**C0294-045-1875-S**	**1.212**	**30.77**	**10.64**	**47.31**	**16.03**	**2.81**
C0294-045-2000-M	**0.294**	**7.47**	**0.045**	**1.14**	**2.000**	**50.80**	**1.224**	**31.10**	**1.142**	**29.00**	**13.37**	**59.45**	**17.23**	**3.01**	**C0294-045-2000-S**	**1.290**	**32.77**	**10.64**	**47.31**	**14.98**	**2.62**
C0294-045-2125-M	**0.294**	**7.47**	**0.045**	**1.14**	**2.125**	**53.98**	**1.298**	**32.98**	**1.210**	**30.74**	**13.37**	**59.45**	**16.17**	**2.83**	**C0294-045-2125-S**	**1.369**	**34.76**	**10.64**	**47.31**	**14.06**	**2.46**
C0294-045-2250-M	**0.294**	**7.47**	**0.045**	**1.14**	**2.250**	**57.15**	**1.373**	**34.87**	**1.279**	**32.48**	**13.37**	**59.45**	**15.23**	**2.67**	**C0294-045-2250-S**	**1.447**	**36.76**	**10.64**	**47.31**	**13.25**	**2.32**
C0294-045-2375-M	**0.294**	**7.47**	**0.045**	**1.14**	**2.375**	**60.33**	**1.447**	**36.75**	**1.347**	**34.22**	**13.37**	**59.45**	**14.40**	**2.52**	**C0294-045-2375-S**	**1.526**	**38.75**	**10.64**	**47.31**	**12.52**	**2.19**
C0294-045-2500-M	**0.294**	**7.47**	**0.045**	**1.14**	**2.500**	**63.50**	**1.521**	**38.64**	**1.416**	**35.96**	**13.37**	**59.45**	**13.65**	**2.39**	**C0294-045-2500-S**	**1.604**	**40.75**	**10.64**	**47.31**	**11.87**	**2.08**
C0294-045-2625-M	**0.294**	**7.47**	**0.045**	**1.14**	**2.625**	**66.68**	**1.595**	**40.52**	**1.484**	**37.70**	**13.37**	**59.45**	**12.98**	**2.27**	**C0294-045-2625-S**	**1.683**	**42.74**	**10.64**	**47.31**	**11.29**	**1.98**

FOR INFORMATION ON ALTERNATIVE FINISHES, SEE PAGE 311

Part Numbers with an "*" are squared and not ground. **Part Numbers in bold** represent the newly expanded Associated Spring RAYMOND compression spring offering.

(OD) 0.294 - 0.294

MUSIC WIRE															STAINLESS STEEL						
Catalog #	Outside Diameter (OD)		Wire Diameter (d)		Free Length (L) Approx		Load Length (L_1)		Solid Height (Sh) Approx		Load (P) at L_1		Spring Rate (R)		Catalog #	Load Length (L_1)		Load (P) at L_1		Spring Rate (R)	
	in	mm	in	mm	in	mm	in	mm	in	mm	lb	N	lb/in	N/mm		in	mm	lb	N	lb/in	N/mm
C0294-045-2750-M	0.294	7.47	0.045	1.14	2.750	69.85	1.670	42.41	1.553	39.44	13.37	59.45	12.37	2.16	**C0294-045-2750-S**	1.761	44.74	10.64	47.31	10.76	1.88
C0294-045-2875-M	0.294	7.47	0.045	1.14	2.875	73.03	1.744	44.29	1.621	41.18	13.37	59.45	11.82	2.07	**C0294-045-2875-S**	1.840	46.73	10.64	47.31	10.27	1.80
C0294-045-3000-M	0.294	7.47	0.045	1.14	3.000	76.20	1.818	46.18	1.690	42.92	13.37	59.45	11.31	1.98	**C0294-045-3000-S**	1.918	48.73	10.64	47.31	9.83	1.72
C0294-045-3250-M	0.294	7.47	0.045	1.14	3.250	82.55	1.967	49.95	1.827	46.41	13.37	59.45	10.41	1.82	**C0294-045-3250-S**	2.075	52.72	10.64	47.31	9.06	1.58
C0294-045-3500-M	0.294	7.47	0.045	1.14	3.500	88.90	2.115	53.72	1.964	49.89	13.37	59.45	9.65	1.69	**C0294-045-3500-S**	2.232	56.71	10.64	47.31	8.39	1.47
C0294-045-3750-M	0.294	7.47	0.045	1.14	3.750	95.25	2.263	57.49	2.101	53.37	13.37	59.45	8.99	1.57	**C0294-045-3750-S**	2.390	60.69	10.64	47.31	7.82	1.37
C0294-045-4000-M	0.294	7.47	0.045	1.14	4.000	101.60	2.412	61.26	2.238	56.85	13.37	59.45	8.42	1.47	**C0294-045-4000-S**	2.547	64.68	10.64	47.31	7.32	1.28
C0294-045-4250-M	0.294	7.47	0.045	1.14	4.250	107.95	2.560	65.03	2.375	60.33	13.37	59.45	7.91	1.38	**C0294-045-4250-S**	2.704	68.67	10.64	47.31	6.88	1.20
C0294-045-4500-M	0.294	7.47	0.045	1.14	4.500	114.30	2.709	68.80	2.512	63.81	13.37	59.45	7.46	1.31	**C0294-045-4500-S**	2.861	72.66	10.64	47.31	6.49	1.14
C0294-045-4750-M	0.294	7.47	0.045	1.14	4.750	120.65	2.857	72.57	2.649	67.29	13.37	59.45	7.06	1.24	**C0294-045-4750-S**	3.018	76.65	10.64	47.31	6.14	1.07
C0294-047-0438-M	0.294	7.47	0.047	1.19	0.438	11.11	0.307	7.80	0.298	7.57	15.04	66.92	115.22	20.16	**C0294-047-0438-S**	0.318	8.08	11.97	53.26	100.19	17.53
C0294-047-0500-M	0.294	7.47	0.047	1.19	0.500	12.70	0.346	8.78	0.334	8.49	15.04	66.92	97.48	17.06	**C0294-047-0500-S**	0.359	9.11	11.97	53.26	84.77	14.83
C0294-047-0563-M	0.294	7.47	0.047	1.19	0.563	14.29	0.384	9.76	0.371	9.41	15.04	66.92	84.48	14.78	**C0294-047-0563-S**	0.400	10.15	11.97	53.26	73.46	12.86
C0294-047-0625-M	0.294	7.47	0.047	1.19	0.625	15.88	0.423	10.75	0.407	10.34	15.04	66.92	74.53	13.04	**C0294-047-0625-S**	0.440	11.18	11.97	53.26	64.81	11.34
C0294-047-0688-M	0.294	7.47	0.047	1.19	0.688	17.46	0.462	11.73	0.443	11.26	15.04	66.92	66.69	11.67	**C0294-047-0688-S**	0.481	12.22	11.97	53.26	57.99	10.15
C0294-047-0750-M	0.294	7.47	0.047	1.19	0.750	19.05	0.501	12.72	0.479	12.18	15.04	66.92	60.33	10.56	**C0294-047-0750-S**	0.522	13.25	11.97	53.26	52.46	9.18
C0294-047-0813-M	0.294	7.47	0.047	1.19	0.813	20.64	0.539	13.70	0.516	13.10	15.04	66.92	55.08	9.64	**C0294-047-0813-S**	0.563	14.29	11.97	53.26	47.90	8.38
C0294-047-0875-M	0.294	7.47	0.047	1.19	0.875	22.23	0.578	14.68	0.552	14.02	15.04	66.92	50.68	8.87	**C0294-047-0875-S**	0.603	15.32	11.97	53.26	44.07	7.71
C0294-047-0938-M	0.294	7.47	0.047	1.19	0.938	23.81	0.617	15.67	0.588	14.94	15.04	66.92	46.92	8.21	**C0294-047-0938-S**	0.644	16.36	11.97	53.26	40.80	7.14
C0294-047-1000-M	0.294	7.47	0.047	1.19	1.000	25.40	0.656	16.65	0.625	15.86	15.04	66.92	43.68	7.64	**C0294-047-1000-S**	0.685	17.39	11.97	53.26	37.99	6.65
C0294-047-1125-M	0.294	7.47	0.047	1.19	1.125	28.58	0.733	18.62	0.697	17.71	15.04	66.92	38.39	6.72	**C0294-047-1125-S**	0.766	19.46	11.97	53.26	33.38	5.84
C0294-047-1250-M	0.294	7.47	0.047	1.19	1.250	31.75	0.811	20.59	0.770	19.55	15.04	66.92	34.24	5.99	**C0294-047-1250-S**	0.848	21.53	11.97	53.26	29.77	5.21
C0294-047-1375-M	0.294	7.47	0.047	1.19	1.375	34.93	0.888	22.56	0.842	21.39	15.04	66.92	30.90	5.41	**C0294-047-1375-S**	0.929	23.61	11.97	53.26	26.87	4.70
C0294-047-1500-M	0.294	7.47	0.047	1.19	1.500	38.10	0.966	24.52	0.915	23.24	15.04	66.92	28.15	4.93	**C0294-047-1500-S**	1.011	25.68	11.97	53.26	24.48	4.28
C0294-047-1625-M	0.294	7.47	0.047	1.19	1.625	41.28	1.043	26.49	0.987	25.08	15.04	66.92	25.85	4.52	**C0294-047-1625-S**	1.092	27.75	11.97	53.26	22.48	3.93
C0294-047-1750-M	0.294	7.47	0.047	1.19	1.750	44.45	1.121	28.46	1.060	26.92	15.04	66.92	23.90	4.18	**C0294-047-1750-S**	1.174	29.82	11.97	53.26	20.78	3.64
C0294-047-1875-M	0.294	7.47	0.047	1.19	1.875	47.63	1.198	30.43	1.132	28.76	15.04	66.92	22.22	3.89	**C0294-047-1875-S**	1.255	31.89	11.97	53.26	19.32	3.38
C0294-047-2000-M	0.294	7.47	0.047	1.19	2.000	50.80	1.275	32.40	1.205	30.61	15.04	66.92	20.77	3.63	**C0294-047-2000-S**	1.337	33.96	11.97	53.26	18.06	3.16
C0294-047-2125-M	0.294	7.47	0.047	1.19	2.125	53.98	1.353	34.37	1.278	32.45	15.04	66.92	19.49	3.41	**C0294-047-2125-S**	1.418	36.03	11.97	53.26	16.95	2.97
C0294-047-2250-M	0.294	7.47	0.047	1.19	2.250	57.15	1.430	36.33	1.350	34.29	15.04	66.92	18.36	3.21	**C0294-047-2250-S**	1.500	38.10	11.97	53.26	15.96	2.79
C0294-047-2375-M	0.294	7.47	0.047	1.19	2.375	60.33	1.508	38.30	1.423	36.14	15.04	66.92	17.35	3.04	**C0294-047-2375-S**	1.581	40.17	11.97	53.26	15.09	2.64
C0294-047-2500-M	0.294	7.47	0.047	1.19	2.500	63.50	1.585	40.27	1.495	37.98	15.04	66.92	16.45	2.88	**C0294-047-2500-S**	1.663	42.24	11.97	53.26	14.30	2.50
C0294-047-2625-M	0.294	7.47	0.047	1.19	2.625	66.68	1.663	42.24	1.568	39.82	15.04	66.92	15.64	2.74	**C0294-047-2625-S**	1.744	44.31	11.97	53.26	13.60	2.38
C0294-047-2750-M	0.294	7.47	0.047	1.19	2.750	69.85	1.740	44.21	1.640	41.66	15.04	66.92	14.90	2.61	**C0294-047-2750-S**	1.826	46.38	11.97	53.26	12.96	2.27
C0294-047-2875-M	0.294	7.47	0.047	1.19	2.875	73.03	1.818	46.17	1.713	43.51	15.04	66.92	14.23	2.49	**C0294-047-2875-S**	1.907	48.45	11.97	53.26	12.38	2.17
C0294-047-3000-M	0.294	7.47	0.047	1.19	3.000	76.20	1.895	48.14	1.785	45.35	15.04	66.92	13.62	2.38	**C0294-047-3000-S**	1.989	50.52	11.97	53.26	11.84	2.07
C0294-047-3250-M	0.294	7.47	0.047	1.19	3.250	82.55	2.050	52.08	1.931	49.04	15.04	66.92	12.54	2.19	**C0294-047-3250-S**	2.152	54.66	11.97	53.26	10.91	1.91
C0294-047-3500-M	0.294	7.47	0.047	1.19	3.500	88.90	2.205	56.01	2.076	52.72	15.04	66.92	11.62	2.03	**C0294-047-3500-S**	2.315	58.80	11.97	53.26	10.10	1.77
C0294-047-3750-M	0.294	7.47	0.047	1.19	3.750	95.25	2.360	59.95	2.221	56.41	15.04	66.92	10.83	1.89	**C0294-047-3750-S**	2.478	62.94	11.97	53.26	9.41	1.65
C0294-047-4000-M	0.294	7.47	0.047	1.19	4.000	101.60	2.515	63.89	2.366	60.09	15.04	66.92	10.13	1.77	**C0294-047-4000-S**	2.641	67.08	11.97	53.26	8.81	1.54
C0294-047-4250-M	0.294	7.47	0.047	1.19	4.250	107.95	2.670	67.82	2.511	63.78	15.04	66.92	9.52	1.67	**C0294-047-4250-S**	2.804	71.22	11.97	53.26	8.28	1.45
C0294-047-4500-M	0.294	7.47	0.047	1.19	4.500	114.30	2.825	71.76	2.656	67.46	15.04	66.92	8.98	1.57	**C0294-047-4500-S**	2.967	75.37	11.97	53.26	7.81	1.37
C0294-047-4750-M	0.294	7.47	0.047	1.19	4.750	120.65	2.980	75.70	2.801	71.15	15.04	66.92	8.50	1.49	**C0294-047-4750-S**	3.130	79.51	11.97	53.26	7.39	1.29
C0294-049-0438-M	0.294	7.47	0.049	1.25	0.438	11.11	0.317	8.05	0.310	7.88	16.84	74.93	139.70	24.45	**C0294-049-0438-S**	0.327	8.31	13.40	59.63	121.48	21.26
C0294-049-0500-M	0.294	7.47	0.049	1.25	0.500	12.70	0.357	9.07	0.349	8.86	16.84	74.93	117.98	20.65	**C0294-049-0500-S**	0.369	9.38	13.40	59.63	102.59	17.95
C0294-049-0563-M	0.294	7.47	0.049	1.25	0.563	14.29	0.398	10.10	0.387	9.83	16.84	74.93	102.11	17.87	**C0294-049-0563-S**	0.412	10.45	13.40	59.63	88.79	15.54
C0294-049-0625-M	0.294	7.47	0.049	1.25	0.625	15.88	0.438	11.12	0.425	10.80	16.84	74.93	90.00	15.75	**C0294-049-0625-S**	0.454	11.52	13.40	59.63	78.26	13.70
C0294-049-0688-M	0.294	7.47	0.049	1.25	0.688	17.46	0.478	12.14	0.463	11.77	16.84	74.93	80.46	14.08	**C0294-049-0688-S**	0.496	12.60	13.40	59.63	69.96	12.24
C0294-049-0750-M	0.294	7.47	0.049	1.25	0.750	19.05	0.518	13.17	0.501	12.74	16.84	74.93	72.74	12.73	**C0294-049-0750-S**	0.538	13.67	13.40	59.63	63.26	11.07
C0294-049-0813-M	0.294	7.47	0.049	1.25	0.813	20.64	0.559	14.19	0.540	13.71	16.84	74.93	66.38	11.62	**C0294-049-0813-S**	0.580	14.74	13.40	59.63	57.72	10.10
C0294-049-0875-M	0.294	7.47	0.049	1.25	0.875	22.23	0.599	15.22	0.578	14.68	16.84	74.93	61.04	10.68	**C0294-049-0875-S**	0.622	15.81	13.40	59.63	53.08	9.29
C0294-049-0938-M	0.294	7.47	0.049	1.25	0.938	23.81	0.639	16.24	0.616	15.65	16.84	74.93	56.50	9.89	**C0294-049-0938-S**	0.665	16.88	13.40	59.63	49.13	8.60
C0294-049-1000-M	0.294	7.47	0.049	1.25	1.000	25.40	0.680	17.26	0.654	16.62	16.84	74.93	52.58	9.20	**C0294-049-1000-S**	0.707	17.95	13.40	59.63	45.72	8.00
C0294-049-1125-M	0.294	7.47	0.049	1.25	1.125	28.58	0.760	19.31	0.731	18.56	16.84	74.93	46.18	8.08	**C0294-049-1125-S**	0.791	20.10	13.40	59.63	40.16	7.03
C0294-049-1250-M	0.294	7.47	0.049	1.25	1.250	31.75	0.841	21.36	0.807	20.50	16.84	74.93	41.17	7.20	**C0294-049-1250-S**	0.876	22.24	13.40	59.63	35.80	6.27
C0294-049-1375-M	0.294	7.47	0.049	1.25	1.375	34.93	0.921	23.41	0.884	22.44	16.84	74.93	37.14	6.50	**C0294-049-1375-S**	0.960	24.38	13.40	59.63	32.30	5.65
C0294-049-1500-M	0.294	7.47	0.049	1.25	1.500	38.10	1.002	25.45	0.960	24.38	16.84	74.93	33.83	5.92	**C0294-049-1500-S**	1.044	26.53	13.40	59.63	29.42	5.15
C0294-049-1625-M	0.294	7.47	0.049	1.25	1.625	41.28	1.083	27.50	1.036	26.32	16.84	74.93	31.06	5.44	**C0294-049-1625-S**	1.129	28.67	13.40	59.63	27.01	4.73
C0294-049-1750-M	0.294	7.47	0.049	1.25	1.750	44.45	1.163	29.55	1.113	28.26	16.84	74.93	28.71	5.02	**C0294-049-1750-S**	1.213	30.81	13.40	59.63	24.97	4.37
C0294-049-1875-M	0.294	7.47	0.049	1.25	1.875	47.63	1.244	31.59	1.189	30.20	16.84	74.93	26.69	4.67	**C0294-049-1875-S**	1.297	32.95	13.40	59.63	23.21	4.06
C0294-049-2000-M	0.294	7.47	0.049	1.25	2.000	50.80	1.325	33.64	1.266	32.15	16.84	74.93	24.94	4.36	**C0294-049-2000-S**	1.382	35.10	13.40	59.63	21.68	3.79
C0294-049-2125-M	0.294	7.47	0.049	1.25	2.125	53.98	1.405	35.69	1.342	34.09	16.84	74.93	23.40	4.09	**C0294-049-2125-S**	1.466	37.24	13.40	59.63	20.35	3.56
C0294-049-2250-M	0.294	7.47	0.049	1.25	2.250	57.15	1.486	37.74	1.418	36.03	16.84	74.93	22.04	3.86	**C0294-049-2250-S**	1.551	39.38	13.40	59.63	19.16	3.35
C0294-049-2375-M	0.294	7.47	0.049	1.25	2.375	60.33	1.566	39.78	1.495	37.97	16.84	74.93	20.83	3.65	**C0294-049-2375-S**	1.635	41.53	13.40	59.63	18.11	3.17

Part Numbers with an "*" are squared and not ground. **Part Numbers in bold** represent the newly expanded Associated Spring RAYMOND compression spring offering.

MUSIC WIRE															STAINLESS STEEL					
Catalog #	Outside Diameter (OD)		Wire Diameter (d)		Free Length (L) Approx		Load Length (L_1)		Solid Height (Sh) Approx		Load (P) at L_1		Spring Rate (R)		Catalog #	Load Length (L_1)		Load (P) at L_1		Spring Rate (R)	
	in	mm	in	mm	in	mm	in	mm	in	mm	lb	N	lb/in	N/mm		in	mm	lb	N	lb/in	N/mm
C0294-049-2500-M	0.294	7.47	0.049	1.25	2.500	63.50	1.647	41.83	1.571	39.91	16.84	74.93	19.75	3.46	**C0294-049-2500-S**	1.719	43.67	13.40	59.63	17.17	3.00
C0294-049-2625-M	0.294	7.47	0.049	1.25	2.625	66.68	1.728	43.88	1.648	41.85	16.84	74.93	18.77	3.28	**C0294-049-2625-S**	1.804	45.81	13.40	59.63	16.32	2.86
C0294-049-2750-M	0.294	7.47	0.049	1.25	2.750	69.85	1.808	45.93	1.724	43.79	16.84	74.93	17.88	3.13	**C0294-049-2750-S**	1.888	47.96	13.40	59.63	15.55	2.72
C0294-049-2875-M	0.294	7.47	0.049	1.25	2.875	73.03	1.889	47.97	1.800	45.73	16.84	74.93	17.08	2.99	**C0294-049-2875-S**	1.972	50.10	13.40	59.63	14.85	2.60
C0294-049-3000-M	0.294	7.47	0.049	1.25	3.000	76.20	1.969	50.02	1.877	47.67	16.84	74.93	16.34	2.86	**C0294-049-3000-S**	2.057	52.24	13.40	59.63	14.21	2.49
C0294-049-3250-M	0.294	7.47	0.049	1.25	3.250	82.55	2.131	54.12	2.030	51.55	16.84	74.93	15.05	2.63	**C0294-049-3250-S**	2.226	56.53	13.40	59.63	13.08	2.29
C0294-049-3500-M	0.294	7.47	0.049	1.25	3.500	88.90	2.292	58.21	2.182	55.44	16.84	74.93	13.94	2.44	**C0294-049-3500-S**	2.394	60.81	13.40	59.63	12.12	2.12
C0294-049-3750-M	0.294	7.47	0.049	1.25	3.750	95.25	2.453	62.31	2.335	59.32	16.84	74.93	12.99	2.27	**C0294-049-3750-S**	2.563	65.10	13.40	59.63	11.29	1.98
C0294-049-4000-M	0.294	7.47	0.049	1.25	4.000	101.60	2.614	66.40	2.488	63.20	16.84	74.93	12.16	2.13	**C0294-049-4000-S**	2.732	69.39	13.40	59.63	10.57	1.85
C0294-049-4250-M	0.294	7.47	0.049	1.25	4.250	107.95	2.775	70.50	2.641	67.08	16.84	74.93	11.42	2.00	**C0294-049-4250-S**	2.900	73.67	13.40	59.63	9.93	1.74
C0294-049-4500-M	0.294	7.47	0.049	1.25	4.500	114.30	2.937	74.59	2.794	70.96	16.84	74.93	10.77	1.89	**C0294-049-4500-S**	3.069	77.96	13.40	59.63	9.37	1.64
C0294-049-4750-M	0.294	7.47	0.049	1.25	4.750	120.65	3.098	78.68	2.947	74.84	16.84	74.93	10.20	1.78	**C0294-049-4750-S**	3.238	82.24	13.40	59.63	8.87	1.55
C0294-051-0438-M	0.294	7.47	0.051	1.30	0.438	11.11	0.326	8.29	0.322	8.18	18.77	83.48	168.83	29.55	**C0294-051-0438-S**	0.336	8.53	14.93	66.42	146.81	25.69
C0294-051-0500-M	0.294	7.47	0.051	1.30	0.500	12.70	0.368	9.35	0.362	9.20	18.77	83.48	142.32	24.91	**C0294-051-0500-S**	0.379	9.64	14.93	66.42	123.76	21.66
C0294-051-0563-M	0.294	7.47	0.051	1.30	0.563	14.29	0.410	10.41	0.402	10.21	18.77	83.48	123.00	21.53	**C0294-051-0563-S**	0.423	10.74	14.93	66.42	106.96	18.72
C0294-051-0625-M	0.294	7.47	0.051	1.30	0.625	15.88	0.452	11.47	0.442	11.23	18.77	83.48	108.31	18.95	**C0294-051-0625-S**	0.466	11.85	14.93	66.42	94.18	16.48
C0294-051-0688-M	0.294	7.47	0.051	1.30	0.688	17.46	0.494	12.54	0.482	12.25	18.77	83.48	96.74	16.93	**C0294-051-0688-S**	0.510	12.95	14.93	66.42	84.13	14.72
C0294-051-0750-M	0.294	7.47	0.051	1.30	0.750	19.05	0.535	13.60	0.522	13.27	18.77	83.48	87.41	15.30	**C0294-051-0750-S**	0.554	14.06	14.93	66.42	76.01	13.30
C0294-051-0813-M	0.294	7.47	0.051	1.30	0.813	20.64	0.577	14.66	0.562	14.28	18.77	83.48	79.72	13.95	**C0294-051-0813-S**	0.597	15.17	14.93	66.42	69.32	12.13
C0294-051-0875-M	0.294	7.47	0.051	1.30	0.875	22.23	0.619	15.72	0.602	15.30	18.77	83.48	73.28	12.82	**C0294-051-0875-S**	0.641	16.27	14.93	66.42	63.72	11.15
C0294-051-0938-M	0.294	7.47	0.051	1.30	0.938	23.81	0.661	16.78	0.642	16.32	18.77	83.48	67.80	11.86	**C0294-051-0938-S**	0.684	17.38	14.93	66.42	58.95	10.32
C0294-051-1000-M	0.294	7.47	0.051	1.30	1.000	25.40	0.702	17.84	0.682	17.34	18.77	83.48	63.08	11.04	**C0294-051-1000-S**	0.728	18.49	14.93	66.42	54.85	9.60
C0294-051-1125-M	0.294	7.47	0.051	1.30	1.125	28.58	0.786	19.97	0.763	19.37	18.77	83.48	55.37	9.69	**C0294-051-1125-S**	0.815	20.70	14.93	66.42	48.15	8.43
C0294-051-1250-M	0.294	7.47	0.051	1.30	1.250	31.75	0.870	22.09	0.843	21.40	18.77	83.48	49.34	8.63	**C0294-051-1250-S**	0.902	22.91	14.93	66.42	42.91	7.51
C0294-051-1375-M	0.294	7.47	0.051	1.30	1.375	34.93	0.953	24.21	0.923	23.44	18.77	83.48	44.50	7.79	**C0294-051-1375-S**	0.989	25.12	14.93	66.42	38.69	6.77
C0294-051-1500-M	0.294	7.47	0.051	1.30	1.500	38.10	1.037	26.34	1.003	25.47	18.77	83.48	40.52	7.09	**C0294-051-1500-S**	1.076	27.34	14.93	66.42	35.23	6.17
C0294-051-1625-M	0.294	7.47	0.051	1.30	1.625	41.28	1.120	28.46	1.083	27.51	18.77	83.48	37.19	6.51	**C0294-051-1625-S**	1.163	29.55	14.93	66.42	32.34	5.66
C0294-051-1750-M	0.294	7.47	0.051	1.30	1.750	44.45	1.204	30.58	1.163	29.54	18.77	83.48	34.37	6.01	**C0294-051-1750-S**	1.250	31.76	14.93	66.42	29.89	5.23
C0294-051-1875-M	0.294	7.47	0.051	1.30	1.875	47.63	1.288	32.70	1.243	31.58	18.77	83.48	31.95	5.59	**C0294-051-1875-S**	1.338	33.97	14.93	66.42	27.78	4.86
C0294-051-2000-M	0.294	7.47	0.051	1.30	2.000	50.80	1.371	34.83	1.323	33.61	18.77	83.48	29.84	5.22	**C0294-051-2000-S**	1.425	36.18	14.93	66.42	25.95	4.54
C0294-051-2125-M	0.294	7.47	0.051	1.30	2.125	53.98	1.455	36.95	1.403	35.64	18.77	83.48	28.00	4.90	**C0294-051-2125-S**	1.512	38.40	14.93	66.42	24.35	4.26
C0294-051-2250-M	0.294	7.47	0.051	1.30	2.250	57.15	1.538	39.07	1.483	37.68	18.77	83.48	26.37	4.61	**C0294-051-2250-S**	1.599	40.61	14.93	66.42	22.93	4.01
C0294-051-2375-M	0.294	7.47	0.051	1.30	2.375	60.33	1.622	41.20	1.563	39.71	18.77	83.48	24.92	4.36	**C0294-051-2375-S**	1.686	42.82	14.93	66.42	21.67	3.79
C0294-051-2500-M	0.294	7.47	0.051	1.30	2.500	63.50	1.706	43.32	1.644	41.75	18.77	83.48	23.62	4.13	**C0294-051-2500-S**	1.773	45.03	14.93	66.42	20.54	3.59
C0294-051-2625-M	0.294	7.47	0.051	1.30	2.625	66.68	1.789	45.44	1.724	43.78	18.77	83.48	22.45	3.93	**C0294-051-2625-S**	1.860	47.25	14.93	66.42	19.52	3.42
C0294-051-2750-M	0.294	7.47	0.051	1.30	2.750	69.85	1.873	47.57	1.804	45.82	18.77	83.48	21.39	3.74	**C0294-051-2750-S**	1.947	49.46	14.93	66.42	18.60	3.26
C0294-051-2875-M	0.294	7.47	0.051	1.30	2.875	73.03	1.956	49.69	1.884	47.85	18.77	83.48	20.43	3.57	**C0294-051-2875-S**	2.034	51.67	14.93	66.42	17.76	3.11
C0294-051-3000-M	0.294	7.47	0.051	1.30	3.000	76.20	2.040	51.81	1.964	49.88	18.77	83.48	19.55	3.42	**C0294-051-3000-S**	2.121	53.88	14.93	66.42	17.00	2.97
C0294-051-3250-M	0.294	7.47	0.051	1.30	3.250	82.55	2.207	56.06	2.124	53.95	18.77	83.48	17.99	3.15	**C0294-051-3250-S**	2.296	58.31	14.93	66.42	15.65	2.74
C0294-051-3500-M	0.294	7.47	0.051	1.30	3.500	88.90	2.374	60.31	2.284	58.02	18.77	83.48	16.67	2.92	**C0294-051-3500-S**	2.470	62.73	14.93	66.42	14.50	2.54
C0294-051-3750-M	0.294	7.47	0.051	1.30	3.750	95.25	2.541	64.55	2.445	62.09	18.77	83.48	15.53	2.72	**C0294-051-3750-S**	2.644	67.16	14.93	66.42	13.50	2.36
C0294-051-4000-M	0.294	7.47	0.051	1.30	4.000	101.60	2.709	68.80	2.605	66.16	18.77	83.48	14.53	2.54	**C0294-051-4000-S**	2.818	71.58	14.93	66.42	12.64	2.21
C0294-051-4250-M	0.294	7.47	0.051	1.30	4.250	107.95	2.876	73.04	2.765	70.23	18.77	83.48	13.66	2.39	**C0294-051-4250-S**	2.992	76.01	14.93	66.42	11.87	2.08
C0294-051-4500-M	0.294	7.47	0.051	1.30	4.500	114.30	3.043	77.29	2.925	74.30	18.77	83.48	12.88	2.25	**C0294-051-4500-S**	3.167	80.43	14.93	66.42	11.20	1.96
C0294-051-4750-M	0.294	7.47	0.051	1.30	4.750	120.65	3.210	81.54	3.085	78.37	18.77	83.48	12.19	2.13	**C0294-051-4750-S**	3.341	84.86	14.93	66.42	10.60	1.85
C0294-055-0500-M	0.294	7.47	0.055	1.40	0.500	12.70	0.388	9.86	0.387	9.82	22.98	102.23	205.21	35.91	**C0294-055-0500-S**	0.398	10.10	18.28	81.29	178.45	31.23
C0294-055-0563-M	0.294	7.47	0.055	1.40	0.563	14.29	0.433	10.99	0.430	10.92	22.98	102.23	176.87	30.95	**C0294-055-0563-S**	0.444	11.27	18.28	81.29	153.80	26.91
C0294-055-0625-M	0.294	7.47	0.055	1.40	0.625	15.88	0.477	12.12	0.474	12.03	22.98	102.23	155.40	27.20	**C0294-055-0625-S**	0.490	12.44	18.28	81.29	135.13	23.65
C0294-055-0688-M	0.294	7.47	0.055	1.40	0.688	17.46	0.522	13.25	0.517	13.13	22.98	102.23	138.58	24.25	**C0294-055-0688-S**	0.536	13.61	18.28	81.29	120.51	21.09
C0294-055-0750-M	0.294	7.47	0.055	1.40	0.750	19.05	0.566	14.38	0.560	14.24	22.98	102.23	125.05	21.88	**C0294-055-0750-S**	0.582	14.78	18.28	81.29	108.74	19.03
C0294-055-0813-M	0.294	7.47	0.055	1.40	0.813	20.64	0.611	15.51	0.604	15.34	22.98	102.23	113.93	19.94	**C0294-055-0813-S**	0.628	15.95	18.28	81.29	99.07	17.34
C0294-055-0875-M	0.294	7.47	0.055	1.40	0.875	22.23	0.655	16.65	0.647	16.44	22.98	102.23	104.62	18.31	**C0294-055-0875-S**	0.674	17.12	18.28	81.29	90.97	15.92
C0294-055-0938-M	0.294	7.47	0.055	1.40	0.938	23.81	0.700	17.78	0.691	17.55	22.98	102.23	96.72	16.93	**C0294-055-0938-S**	0.720	18.29	18.28	81.29	84.10	14.72
C0294-055-1000-M	0.294	7.47	0.055	1.40	1.000	25.40	0.744	18.91	0.734	18.65	22.98	102.23	89.92	15.74	**C0294-055-1000-S**	0.766	19.46	18.28	81.29	78.20	13.68
C0294-055-1125-M	0.294	7.47	0.055	1.40	1.125	28.58	0.834	21.17	0.821	20.86	22.98	102.23	78.85	13.80	**C0294-055-1125-S**	0.858	21.80	18.28	81.29	68.57	12.00
C0294-055-1250-M	0.294	7.47	0.055	1.40	1.250	31.75	0.923	23.43	0.908	23.07	22.98	102.23	70.20	12.29	**C0294-055-1250-S**	0.951	24.15	18.28	81.29	61.05	10.68
C0294-055-1375-M	0.294	7.47	0.055	1.40	1.375	34.93	1.012	25.70	0.995	25.27	22.98	102.23	63.27	11.07	**C0294-055-1375-S**	1.043	26.49	18.28	81.29	55.02	9.63
C0294-055-1500-M	0.294	7.47	0.055	1.40	1.500	38.10	1.101	27.96	1.082	27.48	22.98	102.23	57.58	10.08	**C0294-055-1500-S**	1.135	28.83	18.28	81.29	50.07	8.76
C0294-055-1625-M	0.294	7.47	0.055	1.40	1.625	41.28	1.190	30.22	1.169	29.69	22.98	102.23	52.83	9.24	**C0294-055-1625-S**	1.227	31.17	18.28	81.29	45.94	8.04
C0294-055-1750-M	0.294	7.47	0.055	1.40	1.750	44.45	1.279	32.49	1.256	31.90	22.98	102.23	48.80	8.54	**C0294-055-1750-S**	1.319	33.51	18.28	81.29	42.44	7.43
C0294-055-1875-M	0.294	7.47	0.055	1.40	1.875	47.63	1.368	34.75	1.343	34.10	22.98	102.23	45.34	7.94	**C0294-055-1875-S**	1.412	35.85	18.28	81.29	39.43	6.90
C0294-055-2000-M	0.294	7.47	0.055	1.40	2.000	50.80	1.457	37.01	1.430	36.31	22.98	102.23	42.35	7.41	**C0294-055-2000-S**	1.504	38.19	18.28	81.29	36.82	6.44
C0294-055-2125-M	0.294	7.47	0.055	1.40	2.125	53.98	1.546	39.28	1.516	38.52	22.98	102.23	39.72	6.95	**C0294-055-2125-S**	1.596	40.53	18.28	81.29	34.54	6.04
C0294-055-2250-M	0.294	7.47	0.055	1.40	2.250	57.15	1.635	41.54	1.603	40.73	22.98	102.23	37.40	6.54	**C0294-055-2250-S**	1.688	42.88	18.28	81.29	32.52	5.69

FOR INFORMATION ON ALTERNATIVE FINISHES, SEE PAGE 311

Part Numbers with an "*" are squared and not ground. **Part Numbers in bold** represent the newly expanded Associated Spring RAYMOND compression spring offering.

(OD) 0.294 - 0.300

MUSIC WIRE															STAINLESS STEEL					
Catalog #	Outside Diameter (OD)		Wire Diameter (d)		Free Length (L) Approx		Load Length (L_1)		Solid Height (Sh) Approx		Load (P) at L_1		Spring Rate (R)		Catalog #	Load Length (L_1)		Load (P) at L_1		Spring Rate (R)	
	in	mm	in	mm	in	mm	in	mm	in	mm	lb	N	lb/in	N/mm		in	mm	lb	N	lb/in	N/mm
C0294-055-2375-M	**0.294**	**7.47**	**0.055**	**1.40**	**2.375**	**60.33**	**1.725**	**43.80**	**1.690**	**42.93**	**22.98**	**102.23**	**35.33**	**6.18**	**C0294-055-2375-S**	**1.780**	**45.22**	**18.28**	**81.29**	**30.73**	**5.38**
C0294-055-2500-M	**0.294**	**7.47**	**0.055**	**1.40**	**2.500**	**63.50**	**1.814**	**46.07**	**1.777**	**45.14**	**22.98**	**102.23**	**33.49**	**5.86**	**C0294-055-2500-S**	**1.872**	**47.56**	**18.28**	**81.29**	**29.12**	**5.10**
C0294-055-2625-M	**0.294**	**7.47**	**0.055**	**1.40**	**2.625**	**66.68**	**1.903**	**48.33**	**1.864**	**47.35**	**22.98**	**102.23**	**31.82**	**5.57**	**C0294-055-2625-S**	**1.965**	**49.90**	**18.28**	**81.29**	**27.67**	**4.84**
C0294-055-2750-M	**0.294**	**7.47**	**0.055**	**1.40**	**2.750**	**69.85**	**1.992**	**50.59**	**1.951**	**49.56**	**22.98**	**102.23**	**30.32**	**5.31**	**C0294-055-2750-S**	**2.057**	**52.24**	**18.28**	**81.29**	**26.36**	**4.61**
C0294-055-2875-M	**0.294**	**7.47**	**0.055**	**1.40**	**2.875**	**73.03**	**2.081**	**52.86**	**2.038**	**51.76**	**22.98**	**102.23**	**28.95**	**5.07**	**C0294-055-2875-S**	**2.149**	**54.58**	**18.28**	**81.29**	**25.17**	**4.40**
C0294-055-3000-M	**0.294**	**7.47**	**0.055**	**1.40**	**3.000**	**76.20**	**2.170**	**55.12**	**2.125**	**53.97**	**22.98**	**102.23**	**27.69**	**4.85**	**C0294-055-3000-S**	**2.241**	**56.92**	**18.28**	**81.29**	**24.08**	**4.21**
C0294-055-3250-M	**0.294**	**7.47**	**0.055**	**1.40**	**3.250**	**82.55**	**2.348**	**59.65**	**2.299**	**58.39**	**22.98**	**102.23**	**25.49**	**4.46**	**C0294-055-3250-S**	**2.425**	**61.61**	**18.28**	**81.29**	**22.16**	**3.88**
C0294-055-3500-M	**0.294**	**7.47**	**0.055**	**1.40**	**3.500**	**88.90**	**2.527**	**64.17**	**2.472**	**62.80**	**22.98**	**102.23**	**23.61**	**4.13**	**C0294-055-3500-S**	**2.610**	**66.29**	**18.28**	**81.29**	**20.53**	**3.59**
C0294-055-3750-M	**0.294**	**7.47**	**0.055**	**1.40**	**3.750**	**95.25**	**2.705**	**68.70**	**2.646**	**67.22**	**22.98**	**102.23**	**21.99**	**3.85**	**C0294-055-3750-S**	**2.794**	**70.97**	**18.28**	**81.29**	**19.12**	**3.35**
C0294-055-4000-M	**0.294**	**7.47**	**0.055**	**1.40**	**4.000**	**101.60**	**2.883**	**73.23**	**2.820**	**71.63**	**22.98**	**102.23**	**20.57**	**3.60**	**C0294-055-4000-S**	**2.978**	**75.65**	**18.28**	**81.29**	**17.89**	**3.13**
C0294-055-4250-M	**0.294**	**7.47**	**0.055**	**1.40**	**4.250**	**107.95**	**3.061**	**77.75**	**2.994**	**76.05**	**22.98**	**102.23**	**19.33**	**3.38**	**C0294-055-4250-S**	**3.163**	**80.34**	**18.28**	**81.29**	**16.81**	**2.94**
C0294-055-4500-M	**0.294**	**7.47**	**0.055**	**1.40**	**4.500**	**114.30**	**3.239**	**82.28**	**3.168**	**80.46**	**22.98**	**102.23**	**18.23**	**3.19**	**C0294-055-4500-S**	**3.347**	**85.02**	**18.28**	**81.29**	**15.85**	**2.77**
C0294-055-4750-M	**0.294**	**7.47**	**0.055**	**1.40**	**4.750**	**120.65**	**3.418**	**86.81**	**3.342**	**84.87**	**22.98**	**102.23**	**17.25**	**3.02**	**C0294-055-4750-S**	**3.532**	**89.70**	**18.28**	**81.29**	**15.00**	**2.62**
C0296-030-0340-M	**0.296**	**7.52**	**0.030**	**0.76**	**0.340**	**8.64**	**0.170**	**4.33**	**0.147**	**3.74**	**3.73**	**16.60**	**22.00**	**3.85**	**C0296-030-0340-S**	**0.170**	**4.33**	**3.11**	**13.83**	**18.33**	**3.21**
C0296-030-0500-M	**0.296**	**7.52**	**0.030**	**0.76**	**0.500**	**12.70**	**0.248**	**6.30**	**0.169**	**4.30**	**4.53**	**20.17**	**18.00**	**3.15**	**C0296-030-0500-S**	**0.271**	**6.89**	**3.43**	**15.25**	**14.99**	**2.62**
C0296-030-0660-M	**0.296**	**7.52**	**0.030**	**0.76**	**0.660**	**16.76**	**0.336**	**8.54**	**0.202**	**5.14**	**4.53**	**20.17**	**14.00**	**2.45**	**C0296-030-0660-S**	**0.366**	**9.30**	**3.43**	**15.25**	**11.66**	**2.04**
C0296-030-0690-M	**0.296**	**7.52**	**0.030**	**0.76**	**0.690**	**17.53**	**0.295**	**7.50**	**0.237**	**6.02**	**4.42**	**19.66**	**11.20**	**1.96**	**C0296-030-0690-S**	**0.323**	**8.19**	**3.43**	**15.25**	**9.33**	**1.63**
C0296-030-1190-M	**0.296**	**7.52**	**0.030**	**0.76**	**1.190**	**30.23**	**0.565**	**14.35**	**0.478**	**12.13**	**2.94**	**13.06**	**4.70**	**0.82**	**C0296-030-1190-S**	**0.565**	**14.35**	**2.45**	**10.88**	**3.92**	**0.69**
C0296-030-1380-M	**0.296**	**7.52**	**0.030**	**0.76**	**1.380**	**35.05**	**0.649**	**16.47**	**0.377**	**9.58**	**4.53**	**20.17**	**6.20**	**1.09**	**C0296-030-1380-S**	**0.716**	**18.19**	**3.43**	**15.25**	**5.17**	**0.90**
C0296-030-1940-M	**0.296**	**7.52**	**0.030**	**0.76**	**1.940**	**49.28**	**0.909**	**23.10**	**0.506**	**12.85**	**4.53**	**20.17**	**4.40**	**0.77**	**C0296-030-1940-S**	**1.005**	**25.52**	**3.43**	**15.25**	**3.67**	**0.64**
C0296-030-3880-M	**0.296**	**7.52**	**0.030**	**0.76**	**3.880**	**98.55**	**1.613**	**40.96**	**1.037**	**26.35**	**4.53**	**20.17**	**2.00**	**0.35**	**C0296-030-3880-S**	**1.822**	**46.28**	**3.43**	**15.25**	**1.67**	**0.29**
C0296-032-0530-M	**0.296**	**7.52**	**0.032**	**0.81**	**0.530**	**13.46**	**0.258**	**6.55**	**0.220**	**5.59**	**4.90**	**21.80**	**18.00**	**3.15**	**C0296-032-0530-S**	**0.258**	**6.55**	**4.08**	**18.16**	**14.99**	**2.62**
C0296-032-0810-M	**0.296**	**7.52**	**0.032**	**0.81**	**0.810**	**20.57**	**0.415**	**10.55**	**0.363**	**9.22**	**3.67**	**16.32**	**9.30**	**1.63**	**C0296-032-0810-S**	**0.415**	**10.55**	**3.06**	**13.59**	**7.75**	**1.36**
C0296-032-0880-M	**0.296**	**7.52**	**0.032**	**0.81**	**0.880**	**22.35**	**0.462**	**11.75**	**0.279**	**7.08**	**5.43**	**24.14**	**13.00**	**2.28**	**C0296-032-0880-S**	**0.500**	**12.71**	**4.11**	**18.28**	**10.83**	**1.90**
C0296-032-1000-M	**0.296**	**7.52**	**0.032**	**0.81**	**1.000**	**25.40**	**0.452**	**11.48**	**0.373**	**9.48**	**4.93**	**21.94**	**9.00**	**1.58**	**C0296-032-1000-S**	**0.452**	**11.48**	**4.11**	**18.28**	**7.50**	**1.31**
C0296-032-1130-M	**0.296**	**7.52**	**0.032**	**0.81**	**1.130**	**28.70**	**0.538**	**13.66**	**0.455**	**11.55**	**4.21**	**18.71**	**7.10**	**1.24**	**C0296-032-1130-S**	**0.538**	**13.66**	**3.50**	**15.58**	**5.91**	**1.03**
C0296-032-1750-M	**0.296**	**7.52**	**0.032**	**0.81**	**1.750**	**44.45**	**0.928**	**23.56**	**0.484**	**12.30**	**5.43**	**24.14**	**6.60**	**1.16**	**C0296-032-1750-S**	**1.002**	**25.46**	**4.11**	**18.28**	**5.50**	**0.96**
D12100	0.297	7.55	0.049	1.25	0.472	12.00	0.283	7.20	0.271	6.88	29.98	133.37	165.89	29.03	D22100	0.283	7.20	24.98	111.10	138.17	24.18
D12110	0.297	7.55	0.049	1.25	0.669	17.00	0.386	9.80	0.369	9.38	29.98	133.37	103.09	18.04	D22110	0.386	9.80	24.98	111.10	85.89	15.03
D12120	0.297	7.55	0.049	1.25	0.984	25.00	0.543	13.80	0.517	13.13	29.98	133.37	67.26	11.77	D22120	0.543	13.80	24.98	111.10	56.00	9.80
D12130	0.297	7.55	0.049	1.25	1.398	35.50	0.756	19.20	0.714	18.13	29.98	133.37	46.23	8.09	D22130	0.756	19.20	24.98	111.10	38.51	6.74
D12140	0.297	7.55	0.049	1.25	2.028	51.50	1.067	27.10	1.009	25.63	29.98	133.37	30.80	5.39	D22140	1.067	27.10	24.98	111.10	25.66	4.49
C0300-022-0380-M	0.300	7.62	0.022	0.56	0.380	9.65	0.165	4.19	0.100	2.54	1.93	8.59	9.00	1.58	C0300-022-0380-S	0.222	5.64	1.18	5.27	7.50	1.31
C0300-022-0440-M	0.300	7.62	0.022	0.56	0.440	11.18	0.186	4.72	0.106	2.69	1.93	8.59	7.60	1.33	C0300-022-0440-S	0.253	6.43	1.18	5.27	6.33	1.11
C0300-022-0500-M	0.300	7.62	0.022	0.56	0.500	12.70	0.205	5.21	0.109	2.77	1.93	8.59	6.60	1.16	C0300-022-0500-S	0.285	7.23	1.18	5.27	5.50	0.96
C0300-022-0560-M	0.300	7.62	0.022	0.56	0.560	14.22	0.235	5.97	0.115	2.92	1.93	8.59	5.90	1.03	C0300-022-0560-S	0.319	8.11	1.18	5.27	4.92	0.86
C0300-022-0620-M	0.300	7.62	0.022	0.56	0.620	15.75	0.237	6.02	0.126	3.20	1.93	8.59	5.00	0.88	C0300-022-0620-S	0.336	8.53	1.18	5.27	4.17	0.73
C0300-022-0690-M	0.300	7.62	0.022	0.56	0.690	17.53	0.277	7.04	0.131	3.33	1.93	8.59	4.70	0.82	C0300-022-0690-S	0.388	9.85	1.18	5.27	3.92	0.69
C0300-022-0750-M	0.300	7.62	0.022	0.56	0.750	19.05	0.278	7.06	0.142	3.61	1.93	8.59	4.10	0.72	C0300-022-0750-S	0.403	10.25	1.18	5.27	3.42	0.60
C0300-022-0810-M	0.300	7.62	0.022	0.56	0.810	20.57	0.302	7.67	0.149	3.78	1.93	8.59	3.80	0.67	C0300-022-0810-S	0.436	11.08	1.18	5.27	3.17	0.55
C0300-022-0880-M	0.300	7.62	0.022	0.56	0.880	22.35	0.349	8.86	0.154	3.91	1.93	8.59	3.60	0.63	C0300-022-0880-S	0.485	12.33	1.18	5.27	3.00	0.52
C0300-022-1000-M	0.300	7.62	0.022	0.56	1.000	25.40	0.397	10.08	0.175	4.45	1.93	8.59	3.20	0.56	C0300-022-1000-S	0.556	14.12	1.18	5.27	2.67	0.47
C0300-022-1250-M	0.300	7.62	0.022	0.56	1.250	31.75	0.478	12.14	0.204	5.18	1.93	8.59	2.50	0.44	C0300-022-1250-S	0.682	17.31	1.18	5.27	2.08	0.36
C0300-022-1500-M	0.300	7.62	0.022	0.56	1.500	38.10	0.581	14.76	0.232	5.89	1.93	8.59	2.10	0.37	C0300-022-1500-S	0.823	20.91	1.18	5.27	1.75	0.31
C0300-022-1750-M	0.300	7.62	0.022	0.56	1.750	44.45	0.678	17.22	0.261	6.63	1.93	8.59	1.80	0.32	C0300-022-1750-S	0.961	24.40	1.18	5.27	1.50	0.26
C0300-022-2000-M	0.300	7.62	0.022	0.56	2.000	50.80	0.713	18.11	0.289	7.34	1.93	8.59	1.50	0.26	C0300-022-2000-S	1.053	26.74	1.18	5.27	1.25	0.22
C0300-022-2250-M	0.300	7.62	0.022	0.56	2.250	57.15	0.871	22.12	0.308	7.82	1.93	8.59	1.40	0.25	C0300-022-2250-S	1.235	31.37	1.18	5.27	1.17	0.20
C0300-022-2500-M	0.300	7.62	0.022	0.56	2.500	63.50	1.015	25.78	0.334	8.48	1.93	8.59	1.30	0.23	C0300-022-2500-S	1.407	35.74	1.18	5.27	1.08	0.19
C0300-026-0440-M	0.300	7.62	0.026	0.66	0.440	11.18	0.206	5.23	0.130	3.30	3.12	13.88	13.30	2.33	C0300-026-0440-S	0.267	6.77	1.92	8.54	11.08	1.94
C0300-026-0500-M	0.300	7.62	0.026	0.66	0.500	12.70	0.219	5.56	0.143	3.63	3.12	13.88	11.10	1.94	C0300-026-0500-S	0.292	7.42	1.92	8.54	9.25	1.62
C0300-026-0560-M	0.300	7.62	0.026	0.66	0.560	14.22	0.256	6.50	0.148	3.76	3.12	13.88	10.30	1.80	C0300-026-0560-S	0.336	8.54	1.92	8.54	8.58	1.50
C0300-026-0620-M	0.300	7.62	0.026	0.66	0.620	15.75	0.269	6.83	0.162	4.11	3.12	13.88	8.90	1.56	C0300-026-0620-S	0.361	9.17	1.92	8.54	7.41	1.30
C0300-026-0690-M	0.300	7.62	0.026	0.66	0.690	17.53	0.292	7.42	0.176	4.47	3.12	13.88	7.80	1.37	C0300-026-0690-S	0.394	10.02	1.92	8.54	6.50	1.14
C0300-026-0750-M	0.300	7.62	0.026	0.66	0.750	19.05	0.328	8.33	0.182	4.62	3.12	13.88	7.40	1.30	C0300-026-0750-S	0.438	11.14	1.92	8.54	6.16	1.08
C0300-026-0810-M	0.300	7.62	0.026	0.66	0.810	20.57	0.342	8.69	0.194	4.93	3.12	13.88	6.70	1.17	C0300-026-0810-S	0.466	11.83	1.92	8.54	5.58	0.98
C0300-026-0880-M	0.300	7.62	0.026	0.66	0.880	22.35	0.365	9.27	0.206	5.23	3.12	13.88	6.10	1.07	C0300-026-0880-S	0.502	12.75	1.92	8.54	5.08	0.89
C0300-026-0940-M	0.300	7.62	0.026	0.66	0.940	23.88	0.378	9.60	0.222	5.64	3.12	13.88	5.50	0.96	C0300-026-0940-S	0.521	13.23	1.92	8.54	4.58	0.80
C0300-026-1000-M	0.300	7.62	0.026	0.66	1.000	25.40	0.391	9.93	0.234	5.94	3.12	13.88	5.10	0.89	C0300-026-1000-S	0.548	13.92	1.92	8.54	4.25	0.74
C0300-026-1250-M	0.300	7.62	0.026	0.66	1.250	31.75	0.524	13.31	0.272	6.91	3.12	13.88	4.30	0.75	C0300-026-1250-S	0.714	18.13	1.92	8.54	3.58	0.63
C0300-026-1500-M	0.300	7.62	0.026	0.66	1.500	38.10	0.609	15.47	0.313	7.95	3.12	13.88	3.50	0.61	C0300-026-1500-S	0.841	21.37	1.92	8.54	2.92	0.51
C0300-026-1750-M	0.300	7.62	0.026	0.66	1.750	44.45	0.710	18.03	0.354	8.99	3.12	13.88	3.00	0.53	C0300-026-1750-S	0.981	24.93	1.92	8.54	2.50	0.44
C0300-026-2000-M	0.300	7.62	0.026	0.66	2.000	50.80	0.800	20.32	0.394	10.01	3.12	13.88	2.60	0.46	C0300-026-2000-S	1.113	28.27	1.92	8.54	2.17	0.38
C0300-026-2250-M	0.300	7.62	0.026	0.66	2.250	57.15	1.002	25.45	0.416	10.57	3.12	13.88	2.50	0.44	C0300-026-2250-S	1.328	33.72	1.92	8.54	2.08	0.36
C0300-026-2500-M	0.300	7.62	0.026	0.66	2.500	63.50	1.085	27.56	0.455	11.56	3.12	13.88	2.20	0.39	C0300-026-2500-S	1.452	36.88	1.92	8.54	1.83	0.32

Part Numbers with an "*" are squared and not ground. **Part Numbers in bold** represent the newly expanded Associated Spring RAYMOND compression spring offering.

MUSIC WIRE															STAINLESS STEEL						
Catalog #	Outside Diameter (OD)		Wire Diameter (d)		Free Length (L) Approx		Load Length (L_1)		Solid Height (Sh) Approx		Load (P) at L_1		Spring Rate (R)		Catalog #	Load Length (L_1)		Load (P) at L_1		Spring Rate (R)	
	in	mm	in	mm	in	mm	in	mm	in	mm	lb	N	lb/in	N/mm		in	mm	lb	N	lb/in	N/mm
C0300-030-0440-M	0.300	7.62	0.030	0.76	0.440	11.18	0.235	5.97	0.172	4.37	4.42	19.66	21.50	3.76	C0300-030-0440-S	0.279	7.08	2.89	12.85	17.91	3.13
C0300-030-0500-M	0.300	7.62	0.030	0.76	0.500	12.70	0.262	6.65	0.185	4.70	4.42	19.66	18.60	3.26	C0300-030-0500-S	0.314	7.96	2.89	12.85	15.49	2.71
C0300-030-0560-M	0.300	7.62	0.030	0.76	0.560	14.22	0.290	7.37	0.198	5.03	4.42	19.66	16.40	2.87	C0300-030-0560-S	0.349	8.85	2.89	12.85	13.66	2.39
C0300-030-0620-M	0.300	7.62	0.030	0.76	0.620	15.75	0.317	8.05	0.212	5.38	4.42	19.66	14.60	2.56	C0300-030-0620-S	0.382	9.71	2.89	12.85	12.16	2.13
C0300-030-0690-M	0.300	7.62	0.030	0.76	0.690	17.53	0.350	8.89	0.227	5.77	4.42	19.66	13.00	2.28	C0300-030-0690-S	0.423	10.75	2.89	12.85	10.83	1.90
C0300-030-0750-M	0.300	7.62	0.030	0.76	0.750	19.05	0.377	9.58	0.240	6.10	4.42	19.66	11.90	2.08	C0300-030-0750-S	0.459	11.65	2.89	12.85	9.91	1.73
C0300-030-0810-M	0.300	7.62	0.030	0.76	0.810	20.57	0.405	10.29	0.253	6.43	4.42	19.66	10.90	1.91	C0300-030-0810-S	0.492	12.49	2.89	12.85	9.08	1.59
C0300-030-0880-M	0.300	7.62	0.030	0.76	0.880	22.35	0.437	11.10	0.268	6.81	4.42	19.66	10.00	1.75	C0300-030-0880-S	0.533	13.54	2.89	12.85	8.33	1.46
C0300-030-0940-M	0.300	7.62	0.030	0.76	0.940	23.88	0.465	11.81	0.281	7.14	4.42	19.66	9.30	1.63	C0300-030-0940-S	0.567	14.40	2.89	12.85	7.75	1.36
C0300-030-1000-M	0.300	7.62	0.030	0.76	1.000	25.40	0.492	12.50	0.294	7.47	4.42	19.66	8.70	1.52	C0300-030-1000-S	0.601	15.27	2.89	12.85	7.25	1.27
C0300-030-1250-M	0.300	7.62	0.030	0.76	1.250	31.75	0.607	15.42	0.348	8.84	4.42	19.66	6.90	1.21	C0300-030-1250-S	0.747	18.98	2.89	12.85	5.75	1.01
C0300-030-1500-M	0.300	7.62	0.030	0.76	1.500	38.10	0.722	18.34	0.402	10.21	4.42	19.66	5.70	1.00	C0300-030-1500-S	0.891	22.64	2.89	12.85	4.75	0.83
C0300-030-1750-M	0.300	7.62	0.030	0.76	1.750	44.45	0.837	21.26	0.457	11.61	4.42	19.66	4.80	0.84	C0300-030-1750-S	1.027	26.10	2.89	12.85	4.00	0.70
C0300-030-2000-M	0.300	7.62	0.030	0.76	2.000	50.80	0.952	24.18	0.511	12.98	4.42	19.66	4.20	0.74	C0300-030-2000-S	1.174	29.82	2.89	12.85	3.50	0.61
C0300-030-2250-M	0.300	7.62	0.030	0.76	2.250	57.15	1.067	27.10	0.565	14.35	4.42	19.66	3.70	0.65	C0300-030-2250-S	1.313	33.34	2.89	12.85	3.08	0.54
C0300-030-2500-M	0.300	7.62	0.030	0.76	2.500	63.50	1.200	30.48	0.619	15.72	4.42	19.66	3.40	0.60	C0300-030-2500-S	1.480	37.59	2.89	12.85	2.83	0.50
C0300-032-0440-M	0.300	7.62	0.032	0.81	0.440	11.18	0.235	5.97	0.175	4.45	5.59	24.87	27.30	4.78	C0300-032-0440-S	0.288	7.32	3.46	15.38	22.74	3.98
C0300-032-0500-M	0.300	7.62	0.032	0.81	0.500	12.70	0.263	6.68	0.190	4.83	5.59	24.87	23.60	4.13	C0300-032-0500-S	0.324	8.23	3.46	15.38	19.66	3.44
C0300-032-0560-M	0.300	7.62	0.032	0.81	0.560	14.22	0.286	7.26	0.208	5.28	5.59	24.87	20.40	3.57	C0300-032-0560-S	0.357	9.06	3.46	15.38	16.99	2.97
C0300-032-0620-M	0.300	7.62	0.032	0.81	0.620	15.75	0.312	7.92	0.223	5.66	5.59	24.87	18.20	3.19	C0300-032-0620-S	0.392	9.96	3.46	15.38	15.16	2.65
C0300-032-0690-M	0.300	7.62	0.032	0.81	0.690	17.53	0.348	8.84	0.240	6.10	5.59	24.87	16.30	2.85	C0300-032-0690-S	0.435	11.06	3.46	15.38	13.58	2.38
C0300-032-0750-M	0.300	7.62	0.032	0.81	0.750	19.05	0.374	9.50	0.255	6.48	5.59	24.87	14.90	2.61	C0300-032-0750-S	0.471	11.98	3.46	15.38	12.41	2.17
C0300-032-0810-M	0.300	7.62	0.032	0.81	0.810	20.57	0.400	10.16	0.272	6.91	5.59	24.87	13.60	2.38	C0300-032-0810-S	0.505	12.82	3.46	15.38	11.33	1.98
C0300-032-0880-M	0.300	7.62	0.032	0.81	0.880	22.35	0.435	11.05	0.287	7.29	5.59	24.87	12.60	2.21	C0300-032-0880-S	0.551	13.99	3.46	15.38	10.50	1.84
C0300-032-0940-M	0.300	7.62	0.032	0.81	0.940	23.88	0.444	11.28	0.311	7.90	5.59	24.87	11.30	1.98	C0300-032-0940-S	0.573	14.55	3.46	15.38	9.41	1.65
C0300-032-1000-M	0.300	7.62	0.032	0.81	1.000	25.40	0.470	11.94	0.326	8.28	5.59	24.87	10.60	1.86	C0300-032-1000-S	0.609	15.46	3.46	15.38	8.83	1.55
C0300-032-1250-M	0.300	7.62	0.032	0.81	1.250	31.75	0.600	15.24	0.388	9.86	5.59	24.87	8.60	1.51	C0300-032-1250-S	0.767	19.49	3.46	15.38	7.16	1.25
C0300-032-1500-M	0.300	7.62	0.032	0.81	1.500	38.10	0.713	18.11	0.450	11.43	5.59	24.87	7.10	1.24	C0300-032-1500-S	0.916	23.25	3.46	15.38	5.91	1.03
C0300-032-1750-M	0.300	7.62	0.032	0.81	1.750	44.45	0.818	20.78	0.511	12.98	5.59	24.87	6.00	1.05	C0300-032-1750-S	1.058	26.88	3.46	15.38	5.00	0.87
C0300-032-2000-M	0.300	7.62	0.032	0.81	2.000	50.80	0.945	24.00	0.573	14.55	5.59	24.87	5.30	0.93	C0300-032-2000-S	1.217	30.91	3.46	15.38	4.42	0.77
C0300-032-2250-M	0.300	7.62	0.032	0.81	2.250	57.15	1.113	28.27	0.608	15.44	5.59	24.87	4.90	0.86	C0300-032-2250-S	1.403	35.64	3.46	15.38	4.08	0.71
C0300-032-2500-M	0.300	7.62	0.032	0.81	2.500	63.50	1.233	31.32	0.656	16.66	5.59	24.87	4.40	0.77	C0300-032-2500-S	1.557	39.54	3.46	15.38	3.67	0.64
C0300-035-0380-M	0.300	7.62	0.035	0.89	0.380	9.65	0.224	5.69	0.193	4.90	7.16	31.85	46.00	8.05	C0300-035-0380-S	0.263	6.69	4.46	19.86	38.32	6.71
C0300-035-0440-M	0.300	7.62	0.035	0.89	0.440	11.18	0.254	6.45	0.210	5.33	7.16	31.85	38.50	6.74	C0300-035-0440-S	0.301	7.64	4.46	19.86	32.07	5.61
C0300-035-0500-M	0.300	7.62	0.035	0.89	0.500	12.70	0.284	7.21	0.227	5.77	7.16	31.85	33.20	5.81	C0300-035-0500-S	0.339	8.60	4.46	19.86	27.66	4.84
C0300-035-0560-M	0.300	7.62	0.035	0.89	0.560	14.22	0.314	7.98	0.244	6.20	7.16	31.85	29.10	5.09	C0300-035-0560-S	0.376	9.55	4.46	19.86	24.24	4.24
C0300-035-0620-M	0.300	7.62	0.035	0.89	0.620	15.75	0.344	8.74	0.262	6.65	7.16	31.85	25.90	4.53	C0300-035-0620-S	0.413	10.49	4.46	19.86	21.58	3.78
C0300-035-0690-M	0.300	7.62	0.035	0.89	0.690	17.53	0.379	9.63	0.281	7.14	7.16	31.85	23.00	4.03	C0300-035-0690-S	0.457	11.61	4.46	19.86	19.16	3.35
C0300-035-0750-M	0.300	7.62	0.035	0.89	0.750	19.05	0.408	10.36	0.298	7.57	7.16	31.85	21.00	3.68	C0300-035-0750-S	0.495	12.57	4.46	19.86	17.49	3.06
C0300-035-0810-M	0.300	7.62	0.035	0.89	0.810	20.57	0.438	11.13	0.316	8.03	7.16	31.85	19.30	3.38	C0300-035-0810-S	0.532	13.52	4.46	19.86	16.08	2.81
C0300-035-0880-M	0.300	7.62	0.035	0.89	0.880	22.35	0.473	12.01	0.335	8.51	7.16	31.85	17.60	3.08	C0300-035-0880-S	0.575	14.62	4.46	19.86	14.66	2.57
C0300-035-0940-M	0.300	7.62	0.035	0.89	0.940	23.88	0.503	12.78	0.353	8.97	7.16	31.85	16.40	2.87	C0300-035-0940-S	0.613	15.57	4.46	19.86	13.66	2.39
C0300-035-1000-M	0.300	7.62	0.035	0.89	1.000	25.40	0.533	13.54	0.370	9.40	7.16	31.85	15.30	2.68	C0300-035-1000-S	0.650	16.50	4.46	19.86	12.75	2.23
C0300-035-1120-M	0.300	7.62	0.035	0.89	1.120	28.45	0.593	15.06	0.404	10.26	7.16	31.85	13.60	2.38	C0300-035-1120-S	0.726	18.44	4.46	19.86	11.33	1.98
C0300-035-1250-M	0.300	7.62	0.035	0.89	1.250	31.75	0.657	16.69	0.441	11.20	7.16	31.85	12.10	2.12	C0300-035-1250-S	0.807	20.50	4.46	19.86	10.08	1.76
C0300-035-1380-M	0.300	7.62	0.035	0.89	1.380	35.05	0.722	18.34	0.478	12.14	7.16	31.85	10.90	1.91	C0300-035-1380-S	0.888	22.56	4.46	19.86	9.08	1.59
C0300-035-1500-M	0.300	7.62	0.035	0.89	1.500	38.10	0.782	19.86	0.512	13.00	7.16	31.85	10.00	1.75	C0300-035-1500-S	0.964	24.49	4.46	19.86	8.33	1.46
C0300-035-1750-M	0.300	7.62	0.035	0.89	1.750	44.45	0.906	23.01	0.583	14.81	7.16	31.85	8.50	1.49	C0300-035-1750-S	1.119	28.43	4.46	19.86	7.08	1.24
C0300-035-2000-M	0.300	7.62	0.035	0.89	2.000	50.80	1.030	26.16	0.654	16.61	7.16	31.85	7.40	1.30	C0300-035-2000-S	1.276	32.40	4.46	19.86	6.16	1.08
C0300-035-2250-M	0.300	7.62	0.035	0.89	2.250	57.15	1.155	29.34	0.725	18.42	7.16	31.85	6.50	1.14	C0300-035-2250-S	1.425	36.21	4.46	19.86	5.42	0.95
C0300-035-2500-M	0.300	7.62	0.035	0.89	2.500	63.50	1.279	32.49	0.796	20.22	7.16	31.85	5.90	1.03	C0300-035-2500-S	1.592	40.43	4.46	19.86	4.92	0.86
C0300-038-0380-M	0.300	7.62	0.038	0.97	0.380	9.65	0.240	6.10	0.197	5.00	9.04	40.21	64.50	11.29	C0300-038-0380-S	0.276	7.02	5.58	24.81	53.73	9.40
C0300-038-0440-M	0.300	7.62	0.038	0.97	0.440	11.18	0.271	6.88	0.218	5.54	9.04	40.21	53.50	9.36	C0300-038-0440-S	0.315	8.00	5.58	24.81	44.57	7.80
C0300-038-0500-M	0.300	7.62	0.038	0.97	0.500	12.70	0.305	7.75	0.237	6.02	9.04	40.21	46.40	8.12	C0300-038-0500-S	0.356	9.03	5.58	24.81	38.65	6.76
C0300-038-0560-M	0.300	7.62	0.038	0.97	0.560	14.22	0.327	8.31	0.265	6.73	9.04	40.21	38.80	6.79	C0300-038-0560-S	0.387	9.84	5.58	24.81	32.32	5.66
C0300-038-0620-M	0.300	7.62	0.038	0.97	0.620	15.75	0.361	9.17	0.284	7.21	9.04	40.21	34.90	6.11	C0300-038-0620-S	0.428	10.87	5.58	24.81	29.07	5.09
C0300-038-0690-M	0.300	7.62	0.038	0.97	0.690	17.53	0.392	9.96	0.313	7.95	9.04	40.21	30.30	5.30	C0300-038-0690-S	0.469	11.91	5.58	24.81	25.24	4.42
C0300-038-0750-M	0.300	7.62	0.038	0.97	0.750	19.05	0.426	10.82	0.331	8.41	9.04	40.21	27.90	4.88	C0300-038-0750-S	0.510	12.95	5.58	24.81	23.24	4.07
C0300-038-0810-M	0.300	7.62	0.038	0.97	0.810	20.57	0.460	11.68	0.351	8.92	9.04	40.21	25.80	4.52	C0300-038-0810-S	0.550	13.98	5.58	24.81	21.49	3.76
C0300-038-0880-M	0.300	7.62	0.038	0.97	0.880	22.35	0.491	12.47	0.379	9.63	9.04	40.21	23.20	4.06	C0300-038-0880-S	0.591	15.02	5.58	24.81	19.33	3.38
C0300-038-0940-M	0.300	7.62	0.038	0.97	0.940	23.88	0.525	13.34	0.398	10.11	9.04	40.21	21.80	3.82	C0300-038-0940-S	0.633	16.07	5.58	24.81	18.16	3.18
C0300-038-1000-M	0.300	7.62	0.038	0.97	1.000	25.40	0.559	14.20	0.417	10.59	9.04	40.21	20.50	3.59	C0300-038-1000-S	0.673	17.10	5.58	24.81	17.08	2.99
C0300-038-1120-M	0.300	7.62	0.038	0.97	1.120	28.45	0.627	15.93	0.456	11.58	9.04	40.21	18.30	3.20	C0300-038-1120-S	0.754	19.15	5.58	24.81	15.24	2.67
C0300-038-1250-M	0.300	7.62	0.038	0.97	1.250	31.75	0.705	17.91	0.493	12.52	9.04	40.21	16.60	2.91	C0300-038-1250-S	0.847	21.50	5.58	24.81	13.83	2.42

FOR INFORMATION ON ALTERNATIVE FINISHES, SEE PAGE 311

Part Numbers with an "*" are squared and not ground. **Part Numbers in bold** represent the newly expanded Associated Spring RAYMOND compression spring offering.

MUSIC WIRE																STAINLESS STEEL						
Catalog #	Outside Diameter (OD)		Wire Diameter (d)		Free Length (L) Approx		Load Length (L_1)		Solid Height (Sh) Approx		Load (P) at L_1		Spring Rate (R)		Catalog #	Load Length (L_1)		Load (P) at L_1		Spring Rate (R)	
	in	mm	in	mm	in	mm	in	mm	in	mm	lb	N	lb/in	N/mm		in	mm	lb	N	lb/in	N/mm
C0300-038-1380-M	0.300	7.62	0.038	0.97	1.380	35.05	0.783	19.89	0.532	13.51	9.04	40.21	15.10	2.64	C0300-038-1380-S	0.937	23.79	5.58	24.81	12.58	2.20
C0300-038-1500-M	0.300	7.62	0.038	0.97	1.500	38.10	0.852	21.64	0.570	14.48	9.04	40.21	13.90	2.43	C0300-038-1500-S	1.018	25.86	5.58	24.81	11.58	2.03
C0300-038-1750-M	0.300	7.62	0.038	0.97	1.750	44.45	0.943	23.95	0.680	17.27	9.04	40.21	11.20	1.96	C0300-038-1750-S	1.152	29.26	5.58	24.81	9.33	1.63
C0300-038-2000-M	0.300	7.62	0.038	0.97	2.000	50.80	1.068	27.13	0.765	19.43	9.04	40.21	9.70	1.70	C0300-038-2000-S	1.310	33.27	5.58	24.81	8.08	1.41
C0300-038-2250-M	0.300	7.62	0.038	0.97	2.250	57.15	1.246	31.65	0.806	20.47	9.04	40.21	9.00	1.58	C0300-038-2250-S	1.506	38.25	5.58	24.81	7.50	1.31
C0300-038-2500-M	0.300	7.62	0.038	0.97	2.500	63.50	1.393	35.38	0.874	22.20	9.04	40.21	8.20	1.44	C0300-038-2500-S	1.683	42.76	5.58	24.81	6.83	1.20
C0300-040-0380-M	0.300	7.62	0.040	1.02	0.380	9.65	0.250	6.35	0.231	5.87	9.85	43.81	75.50	13.21	C0300-040-0380-S	0.277	7.04	6.48	28.82	62.89	11.01
C0300-040-0440-M	0.300	7.62	0.040	1.02	0.440	11.18	0.283	7.19	0.253	6.43	9.85	43.81	62.90	11.01	C0300-040-0440-S	0.316	8.04	6.48	28.82	52.40	9.17
C0300-040-0500-M	0.300	7.62	0.040	1.02	0.500	12.70	0.317	8.05	0.275	6.99	9.85	43.81	53.90	9.43	C0300-040-0500-S	0.356	9.04	6.48	28.82	44.90	7.86
C0300-040-0560-M	0.300	7.62	0.040	1.02	0.560	14.22	0.351	8.92	0.297	7.54	9.85	43.81	47.20	8.26	C0300-040-0560-S	0.395	10.04	6.48	28.82	39.32	6.88
C0300-040-0620-M	0.300	7.62	0.040	1.02	0.620	15.75	0.385	9.78	0.320	8.13	9.85	43.81	41.90	7.33	C0300-040-0620-S	0.434	11.03	6.48	28.82	34.90	6.11
C0300-040-0690-M	0.300	7.62	0.040	1.02	0.690	17.53	0.425	10.80	0.346	8.79	9.85	43.81	37.10	6.49	C0300-040-0690-S	0.480	12.20	6.48	28.82	30.90	5.41
C0300-040-0750-M	0.300	7.62	0.040	1.02	0.750	19.05	0.459	11.66	0.368	9.35	9.85	43.81	33.80	5.92	C0300-040-0750-S	0.520	13.21	6.48	28.82	28.16	4.93
C0300-040-0810-M	0.300	7.62	0.040	1.02	0.810	20.57	0.493	12.52	0.390	9.91	9.85	43.81	31.00	5.43	C0300-040-0810-S	0.559	14.20	6.48	28.82	25.82	4.52
C0300-040-0880-M	0.300	7.62	0.040	1.02	0.880	22.35	0.532	13.51	0.416	10.57	9.85	43.81	28.30	4.95	C0300-040-0880-S	0.605	15.37	6.48	28.82	23.57	4.13
C0300-040-0940-M	0.300	7.62	0.040	1.02	0.940	23.88	0.566	14.38	0.438	11.13	9.85	43.81	26.30	4.60	C0300-040-0940-S	0.644	16.36	6.48	28.82	21.91	3.83
C0300-040-1000-M	0.300	7.62	0.040	1.02	1.000	25.40	0.600	15.24	0.460	11.68	9.85	43.81	24.60	4.31	C0300-040-1000-S	0.684	17.37	6.48	28.82	20.49	3.59
C0300-040-1120-M	0.300	7.62	0.040	1.02	1.120	28.45	0.668	16.97	0.505	12.83	9.85	43.81	21.80	3.82	C0300-040-1120-S	0.763	19.39	6.48	28.82	18.16	3.18
C0300-040-1250-M	0.300	7.62	0.040	1.02	1.250	31.75	0.741	18.82	0.553	14.05	9.85	43.81	19.40	3.40	C0300-040-1250-S	0.849	21.57	6.48	28.82	16.16	2.83
C0300-040-1380-M	0.300	7.62	0.040	1.02	1.380	35.05	0.815	20.70	0.601	15.27	9.85	43.81	17.40	3.05	C0300-040-1380-S	0.933	23.70	6.48	28.82	14.49	2.54
C0300-040-1500-M	0.300	7.62	0.040	1.02	1.500	38.10	0.882	22.40	0.645	16.38	9.85	43.81	16.00	2.80	C0300-040-1500-S	1.014	25.75	6.48	28.82	13.33	2.33
C0300-040-1750-M	0.300	7.62	0.040	1.02	1.750	44.45	1.024	26.01	0.737	18.72	9.85	43.81	13.60	2.38	C0300-040-1750-S	1.178	29.92	6.48	28.82	11.33	1.98
C0300-040-2000-M	0.300	7.62	0.040	1.02	2.000	50.80	1.165	29.59	0.830	21.08	9.85	43.81	11.80	2.07	C0300-040-2000-S	1.341	34.06	6.48	28.82	9.83	1.72
C0300-040-2250-M	0.300	7.62	0.040	1.02	2.250	57.15	1.306	33.17	0.922	23.42	9.85	43.81	10.40	1.82	C0300-040-2250-S	1.502	38.16	6.48	28.82	8.66	1.52
C0300-040-2500-M	0.300	7.62	0.040	1.02	2.500	63.50	1.448	36.78	1.015	25.78	9.85	43.81	9.40	1.65	C0300-040-2500-S	1.673	42.48	6.48	28.82	7.83	1.37
C0300-042-0380-M	0.300	7.62	0.042	1.07	0.380	9.65	0.271	6.88	0.210	5.33	11.81	52.53	108.30	18.95	C0300-042-0380-S	0.298	7.57	7.39	32.85	90.21	15.79
C0300-042-0440-M	0.300	7.62	0.042	1.07	0.440	11.18	0.310	7.87	0.230	5.84	11.81	52.53	90.80	15.89	C0300-042-0440-S	0.342	8.70	7.39	32.85	75.64	13.24
C0300-042-0500-M	0.300	7.62	0.042	1.07	0.500	12.70	0.333	8.46	0.266	6.76	11.81	52.53	70.70	12.37	C0300-042-0500-S	0.375	9.51	7.39	32.85	58.89	10.31
C0300-042-0560-M	0.300	7.62	0.042	1.07	0.560	14.22	0.364	9.25	0.294	7.47	11.81	52.53	60.20	10.54	C0300-042-0560-S	0.413	10.48	7.39	32.85	50.15	8.78
C0300-042-0620-M	0.300	7.62	0.042	1.07	0.620	15.75	0.391	9.93	0.325	8.26	11.81	52.53	51.60	9.03	C0300-042-0620-S	0.448	11.38	7.39	32.85	42.98	7.52
C0300-042-0690-M	0.300	7.62	0.042	1.07	0.690	17.53	0.428	10.87	0.357	9.07	11.81	52.53	45.10	7.89	C0300-042-0690-S	0.493	12.53	7.39	32.85	37.57	6.57
C0300-042-0750-M	0.300	7.62	0.042	1.07	0.750	19.05	0.467	11.86	0.378	9.60	11.81	52.53	41.70	7.30	C0300-042-0750-S	0.537	13.65	7.39	32.85	34.74	6.08
C0300-042-0810-M	0.300	7.62	0.042	1.07	0.810	20.57	0.494	12.55	0.409	10.39	11.81	52.53	37.40	6.55	C0300-042-0810-S	0.573	14.55	7.39	32.85	31.15	5.45
C0300-042-0880-M	0.300	7.62	0.042	1.07	0.880	22.35	0.531	13.49	0.442	11.23	11.81	52.53	33.80	5.92	C0300-042-0880-S	0.618	15.69	7.39	32.85	28.16	4.93
C0300-042-0940-M	0.300	7.62	0.042	1.07	0.940	23.88	0.570	14.48	0.462	11.73	11.81	52.53	31.90	5.58	C0300-042-0940-S	0.662	16.82	7.39	32.85	26.57	4.65
C0300-042-1000-M	0.300	7.62	0.042	1.07	1.000	25.40	0.608	15.44	0.484	12.29	11.81	52.53	30.10	5.27	C0300-042-1000-S	0.705	17.92	7.39	32.85	25.07	4.39
C0300-042-1120-M	0.300	7.62	0.042	1.07	1.120	28.45	0.684	17.37	0.526	13.36	11.81	52.53	27.10	4.74	C0300-042-1120-S	0.793	20.14	7.39	32.85	22.57	3.95
C0300-042-1250-M	0.300	7.62	0.042	1.07	1.250	31.75	0.760	19.30	0.578	14.68	11.81	52.53	24.10	4.22	C0300-042-1250-S	0.882	22.41	7.39	32.85	20.08	3.51
C0300-042-1380-M	0.300	7.62	0.042	1.07	1.380	35.05	0.835	21.21	0.630	16.00	11.81	52.53	21.70	3.80	C0300-042-1380-S	0.971	24.67	7.39	32.85	18.08	3.16
C0300-042-1500-M	0.300	7.62	0.042	1.07	1.500	38.10	0.901	22.89	0.684	17.37	11.81	52.53	19.70	3.45	C0300-042-1500-S	1.050	26.67	7.39	32.85	16.41	2.87
C0300-042-1750-M	0.300	7.62	0.042	1.07	1.750	44.45	1.030	26.16	0.794	20.17	11.81	52.53	16.40	2.87	C0300-042-1750-S	1.209	30.72	7.39	32.85	13.66	2.39
C0300-042-2000-M	0.300	7.62	0.042	1.07	2.000	50.80	1.168	29.67	0.894	22.71	11.81	52.53	14.20	2.49	C0300-042-2000-S	1.376	34.94	7.39	32.85	11.83	2.07
C0300-042-2250-M	0.300	7.62	0.042	1.07	2.250	57.15	1.313	33.35	0.995	25.27	11.81	52.53	12.60	2.21	C0300-042-2250-S	1.546	39.28	7.39	32.85	10.50	1.84
C0300-042-2500-M	0.300	7.62	0.042	1.07	2.500	63.50	1.502	38.15	1.050	26.67	11.81	52.53	11.80	2.07	C0300-042-2500-S	1.749	44.42	7.39	32.85	9.83	1.72
C0300-045-0380-M	0.300	7.62	0.045	1.14	0.380	9.65	0.264	6.71	0.247	6.27	14.26	63.43	123.50	21.61	C0300-045-0380-S	0.294	7.47	8.86	39.39	102.88	18.00
C0300-045-0440-M	0.300	7.62	0.045	1.14	0.440	11.18	0.305	7.75	0.269	6.83	14.26	63.43	106.10	18.57	C0300-045-0440-S	0.340	8.63	8.86	39.39	88.38	15.47
C0300-045-0500-M	0.300	7.62	0.045	1.14	0.500	12.70	0.346	8.79	0.292	7.42	14.26	63.43	92.60	16.21	C0300-045-0500-S	0.385	9.78	8.86	39.39	77.14	13.50
C0300-045-0560-M	0.300	7.62	0.045	1.14	0.560	14.22	0.378	9.60	0.325	8.26	14.26	63.43	78.30	13.70	C0300-045-0560-S	0.424	10.78	8.86	39.39	65.22	11.41
C0300-045-0620-M	0.300	7.62	0.045	1.14	0.620	15.75	0.409	10.39	0.359	9.12	14.26	63.43	67.60	11.83	C0300-045-0620-S	0.463	11.75	8.86	39.39	56.31	9.85
C0300-045-0690-M	0.300	7.62	0.045	1.14	0.690	17.53	0.460	11.68	0.381	9.68	14.26	63.43	62.00	10.85	C0300-045-0690-S	0.519	13.17	8.86	39.39	51.65	9.04
C0300-045-0750-M	0.300	7.62	0.045	1.14	0.750	19.05	0.491	12.47	0.415	10.54	14.26	63.43	55.00	9.63	C0300-045-0750-S	0.557	14.14	8.86	39.39	45.82	8.02
C0300-045-0810-M	0.300	7.62	0.045	1.14	0.810	20.57	0.532	13.51	0.437	11.10	14.26	63.43	51.30	8.98	C0300-045-0810-S	0.603	15.31	8.86	39.39	42.73	7.48
C0300-045-0880-M	0.300	7.62	0.045	1.14	0.880	22.35	0.573	14.55	0.472	11.99	14.26	63.43	46.40	8.12	C0300-045-0880-S	0.651	16.53	8.86	39.39	38.65	6.76
C0300-045-0940-M	0.300	7.62	0.045	1.14	0.940	23.88	0.604	15.34	0.506	12.85	14.26	63.43	42.40	7.42	C0300-045-0940-S	0.689	17.51	8.86	39.39	35.32	6.18
C0300-045-1000-M	0.300	7.62	0.045	1.14	1.000	25.40	0.645	16.38	0.527	13.39	14.26	63.43	40.20	7.04	C0300-045-1000-S	0.736	18.68	8.86	39.39	33.49	5.86
C0300-045-1120-M	0.300	7.62	0.045	1.14	1.120	28.45	0.726	18.44	0.573	14.55	14.26	63.43	36.20	6.34	C0300-045-1120-S	0.826	20.99	8.86	39.39	30.16	5.28
C0300-045-1250-M	0.300	7.62	0.045	1.14	1.250	31.75	0.809	20.55	0.629	15.98	14.26	63.43	32.30	5.65	C0300-045-1250-S	0.921	23.39	8.86	39.39	26.91	4.71
C0300-045-1380-M	0.300	7.62	0.045	1.14	1.380	35.05	0.890	22.61	0.686	17.42	14.26	63.43	29.10	5.09	C0300-045-1380-S	1.015	25.77	8.86	39.39	24.24	4.24
C0300-045-1500-M	0.300	7.62	0.045	1.14	1.500	38.10	0.962	24.43	0.742	18.85	14.26	63.43	26.50	4.64	C0300-045-1500-S	1.099	27.91	8.86	39.39	22.08	3.86
C0300-045-1750-M	0.300	7.62	0.045	1.14	1.750	44.45	1.087	27.61	0.878	22.30	14.26	63.43	21.50	3.76	C0300-045-1750-S	1.256	31.89	8.86	39.39	17.91	3.13
C0300-045-2000-M	0.300	7.62	0.045	1.14	2.000	50.80	1.237	31.42	0.990	25.15	14.26	63.43	18.70	3.27	C0300-045-2000-S	1.431	36.36	8.86	39.39	15.58	2.73
C0300-045-2250-M	0.300	7.62	0.045	1.14	2.250	57.15	1.391	35.33	1.102	27.99	14.26	63.43	16.60	2.91	C0300-045-2250-S	1.610	40.88	8.86	39.39	13.83	2.42
C0300-045-2500-M	0.300	7.62	0.045	1.14	2.500	63.50	1.581	40.16	1.170	29.72	14.26	63.43	15.60	2.73	C0300-045-2500-S	1.818	46.19	8.86	39.39	13.00	2.27
C0300-047-0380-M	0.300	7.62	0.047	1.19	0.380	9.65	0.279	7.09	0.250	6.35	16.10	71.62	159.00	27.83	C0300-047-0380-S	0.304	7.73	10.04	44.67	132.45	23.18

Part Numbers with an "*" are squared and not ground. **Part Numbers in bold** represent the newly expanded Associated Spring RAYMOND compression spring offering.

MUSIC WIRE															STAINLESS STEEL						
Catalog #	Outside Diameter (OD)		Wire Diameter (d)		Free Length (L) Approx		Load Length (L_1)		Solid Height (Sh) Approx		Load (P) at L_1		Spring Rate (R)		Catalog #	Load Length (L_1)		Load (P) at L_1		Spring Rate (R)	
	in	mm	in	mm	in	mm	in	mm	in	mm	lb	N	lb/in	N/mm		in	mm	lb	N	lb/in	N/mm
C0300-047-0440-M	0.300	7.62	0.047	1.19	0.440	11.18	0.317	8.05	0.279	7.09	16.10	71.62	131.40	23.00	C0300-047-0440-S	0.348	8.85	10.04	44.67	109.46	19.15
C0300-047-0500-M	0.300	7.62	0.047	1.19	0.500	12.70	0.356	9.04	0.311	7.90	16.10	71.62	112.00	19.60	C0300-047-0500-S	0.392	9.97	10.04	44.67	93.30	16.33
C0300-047-0560-M	0.300	7.62	0.047	1.19	0.560	14.22	0.395	10.03	0.343	8.71	16.10	71.62	97.60	17.08	C0300-047-0560-S	0.436	11.09	10.04	44.67	81.30	14.23
C0300-047-0620-M	0.300	7.62	0.047	1.19	0.620	15.75	0.434	11.02	0.374	9.50	16.10	71.62	86.50	15.14	C0300-047-0620-S	0.481	12.21	10.04	44.67	72.06	12.61
C0300-047-0690-M	0.300	7.62	0.047	1.19	0.690	17.53	0.479	12.17	0.408	10.36	16.10	71.62	76.30	13.35	C0300-047-0690-S	0.532	13.51	10.04	44.67	63.56	11.12
C0300-047-0750-M	0.300	7.62	0.047	1.19	0.750	19.05	0.518	13.16	0.435	11.05	16.10	71.62	69.30	12.13	C0300-047-0750-S	0.576	14.63	10.04	44.67	57.73	10.10
C0300-047-0810-M	0.300	7.62	0.047	1.19	0.810	20.57	0.556	14.12	0.461	11.71	16.10	71.62	63.50	11.11	C0300-047-0810-S	0.620	15.75	10.04	44.67	52.90	9.26
C0300-047-0880-M	0.300	7.62	0.047	1.19	0.880	22.35	0.602	15.29	0.493	12.52	16.10	71.62	57.90	10.13	C0300-047-0880-S	0.672	17.06	10.04	44.67	48.23	8.44
C0300-047-0940-M	0.300	7.62	0.047	1.19	0.940	23.88	0.640	16.26	0.520	13.21	16.10	71.62	53.80	9.42	C0300-047-0940-S	0.716	18.18	10.04	44.67	44.82	7.84
C0300-047-1000-M	0.300	7.62	0.047	1.19	1.000	25.40	0.679	17.25	0.547	13.89	16.10	71.62	50.20	8.79	C0300-047-1000-S	0.760	19.30	10.04	44.67	41.82	7.32
C0300-047-1120-M	0.300	7.62	0.047	1.19	1.120	28.45	0.757	19.23	0.600	15.24	16.10	71.62	44.30	7.75	C0300-047-1120-S	0.848	21.54	10.04	44.67	36.90	6.46
C0300-047-1250-M	0.300	7.62	0.047	1.19	1.250	31.75	0.841	21.36	0.658	16.71	16.10	71.62	39.30	6.88	C0300-047-1250-S	0.943	23.96	10.04	44.67	32.74	5.73
C0300-047-1380-M	0.300	7.62	0.047	1.19	1.380	35.05	0.925	23.50	0.717	18.21	16.10	71.62	35.40	6.20	C0300-047-1380-S	1.039	26.40	10.04	44.67	29.49	5.16
C0300-047-1500-M	0.300	7.62	0.047	1.19	1.500	38.10	1.002	25.45	0.770	19.56	16.10	71.62	32.30	5.65	C0300-047-1500-S	1.127	28.62	10.04	44.67	26.91	4.71
C0300-047-1750-M	0.300	7.62	0.047	1.19	1.750	44.45	1.164	29.57	0.882	22.40	16.10	71.62	27.50	4.81	C0300-047-1750-S	1.312	33.31	10.04	44.67	22.91	4.01
C0300-047-2000-M	0.300	7.62	0.047	1.19	2.000	50.80	1.325	33.66	0.994	25.25	16.10	71.62	23.90	4.18	C0300-047-2000-S	1.496	37.99	10.04	44.67	19.91	3.48
C0300-047-2250-M	0.300	7.62	0.047	1.19	2.250	57.15	1.487	37.77	1.106	28.09	16.10	71.62	21.10	3.69	C0300-047-2250-S	1.679	42.64	10.04	44.67	17.58	3.08
C0300-047-2500-M	0.300	7.62	0.047	1.19	2.500	63.50	1.648	41.86	1.218	30.94	16.10	71.62	18.90	3.31	C0300-047-2500-S	1.862	47.30	10.04	44.67	15.74	2.76
C0300-047-2750-M	0.300	7.62	0.047	1.19	2.750	69.85	1.810	45.97	1.330	33.78	16.10	71.62	17.10	2.99	C0300-047-2750-S	2.045	51.94	10.04	44.67	14.24	2.49
C0300-047-3000-M	0.300	7.62	0.047	1.19	3.000	76.20	1.971	50.06	1.442	36.63	16.10	71.62	15.70	2.75	C0300-047-3000-S	2.232	56.70	10.04	44.67	13.08	2.29
C0300-049-0380-M	0.300	7.62	0.049	1.25	0.380	9.65	0.285	7.24	0.263	6.68	17.98	79.98	189.50	33.16	C0300-049-0380-S	0.308	7.83	11.32	50.37	157.85	27.62
C0300-049-0440-M	0.300	7.62	0.049	1.25	0.440	11.18	0.325	8.26	0.294	7.47	17.98	79.98	156.30	27.35	C0300-049-0440-S	0.353	8.97	11.32	50.37	130.20	22.78
C0300-049-0500-M	0.300	7.62	0.049	1.25	0.500	12.70	0.365	9.27	0.328	8.33	17.98	79.98	133.00	23.28	C0300-049-0500-S	0.398	10.10	11.32	50.37	110.79	19.39
C0300-049-0560-M	0.300	7.62	0.049	1.25	0.560	14.22	0.405	10.29	0.362	9.19	17.98	79.98	115.70	20.25	C0300-049-0560-S	0.443	11.24	11.32	50.37	96.38	16.87
C0300-049-0620-M	0.300	7.62	0.049	1.25	0.620	15.75	0.444	11.28	0.395	10.03	17.98	79.98	102.40	17.92	C0300-049-0620-S	0.487	12.38	11.32	50.37	85.30	14.93
C0300-049-0690-M	0.300	7.62	0.049	1.25	0.690	17.53	0.491	12.47	0.431	10.95	17.98	79.98	90.30	15.80	C0300-049-0690-S	0.539	13.70	11.32	50.37	75.22	13.16
C0300-049-0750-M	0.300	7.62	0.049	1.25	0.750	19.05	0.531	13.49	0.460	11.68	17.98	79.98	82.00	14.35	C0300-049-0750-S	0.584	14.84	11.32	50.37	68.31	11.95
C0300-049-0810-M	0.300	7.62	0.049	1.25	0.810	20.57	0.570	14.48	0.489	12.42	17.98	79.98	75.10	13.14	C0300-049-0810-S	0.629	15.98	11.32	50.37	62.56	10.95
C0300-049-0880-M	0.300	7.62	0.049	1.25	0.880	22.35	0.617	15.67	0.523	13.28	17.98	79.98	68.40	11.97	C0300-049-0880-S	0.681	17.30	11.32	50.37	56.98	9.97
C0300-049-0940-M	0.300	7.62	0.049	1.25	0.940	23.88	0.657	16.69	0.551	14.00	17.98	79.98	63.50	11.11	C0300-049-0940-S	0.726	18.44	11.32	50.37	52.90	9.26
C0300-049-1000-M	0.300	7.62	0.049	1.25	1.000	25.40	0.697	17.70	0.580	14.73	17.98	79.98	59.30	10.38	C0300-049-1000-S	0.771	19.58	11.32	50.37	49.40	8.64
C0300-049-1120-M	0.300	7.62	0.049	1.25	1.120	28.45	0.776	19.71	0.638	16.21	17.98	79.98	52.30	9.15	C0300-049-1120-S	0.860	21.85	11.32	50.37	43.57	7.62
C0300-049-1250-M	0.300	7.62	0.049	1.25	1.250	31.75	0.862	21.89	0.700	17.78	17.98	79.98	46.40	8.12	C0300-049-1250-S	0.957	24.31	11.32	50.37	38.65	6.76
C0300-049-1380-M	0.300	7.62	0.049	1.25	1.380	35.05	0.949	24.10	0.763	19.38	17.98	79.98	41.70	7.30	C0300-049-1380-S	1.054	26.77	11.32	50.37	34.74	6.08
C0300-049-1500-M	0.300	7.62	0.049	1.25	1.500	38.10	1.028	26.11	0.821	20.85	17.98	79.98	38.10	6.67	C0300-049-1500-S	1.143	29.04	11.32	50.37	31.74	5.55
C0300-049-1750-M	0.300	7.62	0.049	1.25	1.750	44.45	1.194	30.33	0.941	23.90	17.98	79.98	32.40	5.67	C0300-049-1750-S	1.330	33.79	11.32	50.37	26.99	4.72
C0300-049-2000-M	0.300	7.62	0.049	1.25	2.000	50.80	1.360	34.54	1.061	26.95	17.98	79.98	28.10	4.92	C0300-049-2000-S	1.516	38.51	11.32	50.37	23.41	4.10
C0300-049-2250-M	0.300	7.62	0.049	1.25	2.250	57.15	1.526	38.76	1.181	30.00	17.98	79.98	24.80	4.34	C0300-049-2250-S	1.702	43.23	11.32	50.37	20.66	3.62
C0300-049-2500-M	0.300	7.62	0.049	1.25	2.500	63.50	1.692	42.98	1.301	33.05	17.98	79.98	22.30	3.90	C0300-049-2500-S	1.890	48.02	11.32	50.37	18.58	3.25
C0300-049-2750-M	0.300	7.62	0.049	1.25	2.750	69.85	1.858	47.19	1.421	36.09	17.98	79.98	20.20	3.54	C0300-049-2750-S	2.077	52.76	11.32	50.37	16.83	2.94
C0300-049-3000-M	0.300	7.62	0.049	1.25	3.000	76.20	2.024	51.41	1.541	39.14	17.98	79.98	18.40	3.22	C0300-049-3000-S	2.261	57.43	11.32	50.37	15.33	2.68
C0300-051-0380-M	0.300	7.62	0.051	1.30	0.380	9.65	0.291	7.39	0.274	6.96	20.17	89.72	226.60	39.66	C0300-051-0380-S	0.313	7.96	12.61	56.08	188.76	33.03
C0300-051-0440-M	0.300	7.62	0.051	1.30	0.440	11.18	0.332	8.43	0.308	7.82	20.17	89.72	186.40	32.62	C0300-051-0440-S	0.359	9.11	12.61	56.08	155.27	27.17
C0300-051-0500-M	0.300	7.62	0.051	1.30	0.500	12.70	0.373	9.47	0.343	8.71	20.17	89.72	158.30	27.70	C0300-051-0500-S	0.404	10.27	12.61	56.08	131.86	23.08
C0300-051-0560-M	0.300	7.62	0.051	1.30	0.560	14.22	0.413	10.49	0.379	9.63	20.17	89.72	137.50	24.06	C0300-051-0560-S	0.450	11.43	12.61	56.08	114.54	20.04
C0300-051-0620-M	0.300	7.62	0.051	1.30	0.620	15.75	0.454	11.53	0.415	10.54	20.17	89.72	121.60	21.28	C0300-051-0620-S	0.496	12.59	12.61	56.08	101.29	17.73
C0300-051-0690-M	0.300	7.62	0.051	1.30	0.690	17.53	0.502	12.75	0.453	11.51	20.17	89.72	107.10	18.74	C0300-051-0690-S	0.549	13.94	12.61	56.08	89.21	15.61
C0300-051-0750-M	0.300	7.62	0.051	1.30	0.750	19.05	0.542	13.77	0.483	12.27	20.17	89.72	97.20	17.01	C0300-051-0750-S	0.594	15.09	12.61	56.08	80.97	14.17
C0300-051-0810-M	0.300	7.62	0.051	1.30	0.810	20.57	0.583	14.81	0.514	13.06	20.17	89.72	89.00	15.58	C0300-051-0810-S	0.640	16.25	12.61	56.08	74.14	12.97
C0300-051-0880-M	0.300	7.62	0.051	1.30	0.880	22.35	0.631	16.03	0.550	13.97	20.17	89.72	81.00	14.18	C0300-051-0880-S	0.693	17.61	12.61	56.08	67.47	11.81
C0300-051-0940-M	0.300	7.62	0.051	1.30	0.940	23.88	0.672	17.07	0.580	14.73	20.17	89.72	75.20	13.16	C0300-051-0940-S	0.739	18.76	12.61	56.08	62.64	10.96
C0300-051-1000-M	0.300	7.62	0.051	1.30	1.000	25.40	0.712	18.08	0.611	15.52	20.17	89.72	70.10	12.27	C0300-051-1000-S	0.784	19.92	12.61	56.08	58.39	10.22
C0300-051-1120-M	0.300	7.62	0.051	1.30	1.120	28.45	0.794	20.17	0.672	17.07	20.17	89.72	61.90	10.83	C0300-051-1120-S	0.875	22.24	12.61	56.08	51.56	9.02
C0300-051-1250-M	0.300	7.62	0.051	1.30	1.250	31.75	0.882	22.40	0.738	18.75	20.17	89.72	54.90	9.61	C0300-051-1250-S	0.974	24.75	12.61	56.08	45.73	8.00
C0300-051-1380-M	0.300	7.62	0.051	1.30	1.380	35.05	0.971	24.66	0.805	20.45	20.17	89.72	49.30	8.63	C0300-051-1380-S	1.073	27.25	12.61	56.08	41.07	7.19
C0300-051-1500-M	0.300	7.62	0.051	1.30	1.500	38.10	1.052	26.72	0.866	22.00	20.17	89.72	45.10	7.89	C0300-051-1500-S	1.164	29.58	12.61	56.08	37.57	6.57
C0300-051-1750-M	0.300	7.62	0.051	1.30	1.750	44.45	1.222	31.04	0.993	25.22	20.17	89.72	38.20	6.69	C0300-051-1750-S	1.354	34.39	12.61	56.08	31.82	5.57
C0300-051-2000-M	0.300	7.62	0.051	1.30	2.000	50.80	1.392	35.36	1.121	28.47	20.17	89.72	33.20	5.81	C0300-051-2000-S	1.544	39.22	12.61	56.08	27.66	4.84
C0300-051-2250-M	0.300	7.62	0.051	1.30	2.250	57.15	1.562	39.67	1.248	31.70	20.17	89.72	29.30	5.13	C0300-051-2250-S	1.733	44.03	12.61	56.08	24.41	4.27
C0300-051-2500-M	0.300	7.62	0.051	1.30	2.500	63.50	1.732	43.99	1.376	34.95	20.17	89.72	26.30	4.60	C0300-051-2500-S	1.925	48.88	12.61	56.08	21.91	3.83
C0300-051-2750-M	0.300	7.62	0.051	1.30	2.750	69.85	1.902	48.31	1.503	38.18	20.17	89.72	23.80	4.17	C0300-051-2750-S	2.114	53.70	12.61	56.08	19.83	3.47
C0300-051-3000-M	0.300	7.62	0.051	1.30	3.000	76.20	2.072	52.63	1.631	41.43	20.17	89.72	21.70	3.80	C0300-051-3000-S	2.303	58.48	12.61	56.08	18.08	3.16
C0312-016-0250-M*	**0.312**	**7.93**	**0.016**	**0.41**	**0.250**	**6.35**	**0.092**	**2.33**	**0.067**	**1.70**	**0.45**	**2.00**	**2.84**	**0.50**	**C0312-016-0250-S***	**0.092**	**2.33**	**0.37**	**1.67**	**2.37**	**0.41**
C0312-016-0313-M*	**0.312**	**7.93**	**0.016**	**0.41**	**0.313**	**7.95**	**0.107**	**2.71**	**0.074**	**1.87**	**0.46**	**2.03**	**2.21**	**0.39**	**C0312-016-0313-S***	**0.107**	**2.71**	**0.38**	**1.69**	**1.84**	**0.32**

FOR INFORMATION ON ALTERNATIVE FINISHES, SEE PAGE 311

Part Numbers with an "*" are squared and not ground. **Part Numbers in bold** represent the newly expanded Associated Spring RAYMOND compression spring offering.

(OD) 0.312 - 0.312

MUSIC WIRE															STAINLESS STEEL						
Catalog #	Outside Diameter (OD)		Wire Diameter (d)		Free Length (L) Approx		Load Length (L_1)		Solid Height (Sh) Approx		Load (P) at L_1		Spring Rate (R)		Catalog #	Load Length (L_1)		Load (P) at L_1		Spring Rate (R)	
	in	mm	in	mm	in	mm	in	mm	in	mm	lb	N	lb/in	N/mm		in	mm	lb	N	lb/in	N/mm
C0312-016-0375-M*	**0.312**	**7.93**	**0.016**	**0.41**	**0.375**	**9.53**	**0.122**	**3.09**	**0.081**	**2.05**	**0.46**	**2.03**	**1.80**	**0.32**	**C0312-016-0375-S***	**0.122**	**3.09**	**0.38**	**1.69**	**1.50**	**0.26**
C0312-016-0438-M*	**0.312**	**7.93**	**0.016**	**0.41**	**0.438**	**11.13**	**0.137**	**3.47**	**0.088**	**2.22**	**0.46**	**2.04**	**1.52**	**0.27**	**C0312-016-0438-S***	**0.137**	**3.47**	**0.38**	**1.70**	**1.27**	**0.22**
C0312-016-0500-M*	**0.312**	**7.93**	**0.016**	**0.41**	**0.500**	**12.70**	**0.151**	**3.84**	**0.094**	**2.40**	**0.46**	**2.05**	**1.32**	**0.23**	**C0312-016-0500-S***	**0.151**	**3.84**	**0.38**	**1.71**	**1.10**	**0.19**
C0312-016-0563-M*	**0.312**	**7.93**	**0.016**	**0.41**	**0.563**	**14.30**	**0.166**	**4.22**	**0.101**	**2.56**	**0.46**	**2.07**	**1.17**	**0.20**	**C0312-016-0563-S***	**0.166**	**4.22**	**0.39**	**1.72**	**0.98**	**0.17**
C0312-016-0625-M*	**0.312**	**7.93**	**0.016**	**0.41**	**0.625**	**15.88**	**0.181**	**4.60**	**0.108**	**2.75**	**0.46**	**2.05**	**1.04**	**0.18**	**C0312-016-0625-S***	**0.181**	**4.60**	**0.38**	**1.71**	**0.87**	**0.15**
C0312-016-0688-M*	**0.312**	**7.93**	**0.016**	**0.41**	**0.688**	**17.48**	**0.196**	**4.99**	**0.115**	**2.92**	**0.46**	**2.06**	**0.94**	**0.16**	**C0312-016-0688-S***	**0.196**	**4.99**	**0.38**	**1.71**	**0.78**	**0.14**
C0312-016-0750-M*	**0.312**	**7.93**	**0.016**	**0.41**	**0.750**	**19.05**	**0.211**	**5.35**	**0.121**	**3.08**	**0.46**	**2.06**	**0.86**	**0.15**	**C0312-016-0750-S***	**0.211**	**5.35**	**0.39**	**1.72**	**0.72**	**0.13**
C0312-016-0813-M*	**0.312**	**7.93**	**0.016**	**0.41**	**0.813**	**20.65**	**0.225**	**5.72**	**0.128**	**3.24**	**0.46**	**2.07**	**0.79**	**0.14**	**C0312-016-0813-S***	**0.225**	**5.72**	**0.39**	**1.72**	**0.66**	**0.12**
C0312-016-0875-M*	**0.312**	**7.93**	**0.016**	**0.41**	**0.875**	**22.23**	**0.240**	**6.09**	**0.134**	**3.40**	**0.46**	**2.06**	**0.73**	**0.13**	**C0312-016-0875-S***	**0.240**	**6.09**	**0.39**	**1.72**	**0.61**	**0.11**
C0312-016-0938-M*	**0.312**	**7.93**	**0.016**	**0.41**	**0.938**	**23.83**	**0.254**	**6.46**	**0.140**	**3.56**	**0.47**	**2.07**	**0.68**	**0.12**	**C0312-016-0938-S***	**0.254**	**6.46**	**0.39**	**1.72**	**0.57**	**0.10**
C0312-016-1000-M*	**0.312**	**7.93**	**0.016**	**0.41**	**1.000**	**25.40**	**0.268**	**6.81**	**0.146**	**3.70**	**0.47**	**2.08**	**0.64**	**0.11**	**C0312-016-1000-S***	**0.268**	**6.81**	**0.39**	**1.74**	**0.53**	**0.09**
C0312-016-1250-M*	**0.312**	**7.93**	**0.016**	**0.41**	**1.250**	**31.75**	**0.325**	**8.26**	**0.170**	**4.32**	**0.47**	**2.10**	**0.51**	**0.09**	**C0312-016-1250-S***	**0.325**	**8.26**	**0.39**	**1.75**	**0.43**	**0.07**
C0312-016-1380-M*	**0.312**	**7.93**	**0.016**	**0.41**	**1.380**	**35.05**	**0.360**	**9.15**	**0.189**	**4.80**	**0.45**	**2.00**	**0.44**	**0.08**	**C0312-016-1380-S***	**0.360**	**9.15**	**0.37**	**1.66**	**0.37**	**0.06**
C0312-016-1500-M*	**0.312**	**7.93**	**0.016**	**0.41**	**1.500**	**38.10**	**0.383**	**9.74**	**0.196**	**4.97**	**0.47**	**2.09**	**0.42**	**0.07**	**C0312-016-1500-S***	**0.383**	**9.74**	**0.39**	**1.74**	**0.35**	**0.06**
C0312-016-1750-M*	**0.312**	**7.93**	**0.016**	**0.41**	**1.750**	**44.45**	**0.441**	**11.19**	**0.220**	**5.59**	**0.47**	**2.10**	**0.36**	**0.06**	**C0312-016-1750-S***	**0.441**	**11.19**	**0.39**	**1.75**	**0.30**	**0.05**
C0312-016-2000-M*	**0.312**	**7.93**	**0.016**	**0.41**	**2.000**	**50.80**	**0.500**	**12.70**	**0.247**	**6.28**	**0.46**	**2.07**	**0.31**	**0.05**	**C0312-016-2000-S***	**0.500**	**12.70**	**0.39**	**1.72**	**0.26**	**0.05**
C0312-020-0560-M*	**0.312**	**7.93**	**0.020**	**0.51**	**0.560**	**14.22**	**0.260**	**6.60**	**0.101**	**2.55**	**1.38**	**6.14**	**4.60**	**0.81**	**C0312-020-0560-S***	**0.291**	**7.40**	**1.03**	**4.58**	**3.83**	**0.67**
C0312-020-0660-M*	**0.312**	**7.93**	**0.020**	**0.51**	**0.660**	**16.76**	**0.218**	**5.54**	**0.147**	**3.74**	**1.02**	**4.52**	**2.30**	**0.40**	**C0312-020-0660-S***	**0.218**	**5.54**	**0.85**	**3.76**	**1.92**	**0.34**
C0312-020-0750-M*	**0.312**	**7.93**	**0.020**	**0.51**	**0.750**	**19.05**	**0.268**	**6.81**	**0.192**	**4.89**	**0.72**	**3.21**	**1.50**	**0.26**	**C0312-020-0750-S***	**0.268**	**6.81**	**0.60**	**2.68**	**1.25**	**0.22**
C0312-020-0880-M*	**0.312**	**7.93**	**0.020**	**0.51**	**0.880**	**22.35**	**0.270**	**6.86**	**0.171**	**4.34**	**1.10**	**4.88**	**1.80**	**0.32**	**C0312-020-0880-S***	**0.270**	**6.86**	**0.91**	**4.07**	**1.50**	**0.26**
C0312-020-1000-M*	**0.312**	**7.93**	**0.020**	**0.51**	**1.000**	**25.40**	**0.342**	**8.70**	**0.155**	**3.95**	**1.38**	**6.14**	**2.10**	**0.37**	**C0312-020-1000-S***	**0.412**	**10.46**	**1.03**	**4.58**	**1.75**	**0.31**
C0312-020-1130-M*	**0.312**	**7.93**	**0.020**	**0.51**	**1.130**	**28.70**	**0.325**	**8.26**	**0.192**	**4.89**	**1.21**	**5.37**	**1.50**	**0.26**	**C0312-020-1130-S***	**0.325**	**8.26**	**1.01**	**4.47**	**1.25**	**0.22**
C0312-020-1630-M*	**0.312**	**7.93**	**0.020**	**0.51**	**1.630**	**41.40**	**0.466**	**11.84**	**0.274**	**6.96**	**1.07**	**4.76**	**0.92**	**0.16**	**C0312-020-1630-S***	**0.466**	**11.84**	**0.89**	**3.97**	**0.77**	**0.13**
C0312-020-1750-M*	**0.312**	**7.93**	**0.020**	**0.51**	**1.750**	**44.45**	**0.475**	**12.08**	**0.263**	**6.68**	**1.24**	**5.50**	**0.97**	**0.17**	**C0312-020-1750-S***	**0.477**	**12.10**	**1.03**	**4.58**	**0.81**	**0.14**
C0312-023-0375-M	**0.312**	**7.93**	**0.023**	**0.58**	**0.375**	**9.53**	**0.160**	**4.07**	**0.129**	**3.27**	**1.05**	**4.69**	**4.91**	**0.86**	**C0312-023-0375-S**	**0.160**	**4.07**	**0.88**	**3.90**	**4.09**	**0.72**
C0312-023-0438-M	**0.312**	**7.93**	**0.023**	**0.58**	**0.438**	**11.13**	**0.184**	**4.67**	**0.146**	**3.71**	**1.05**	**4.66**	**4.12**	**0.72**	**C0312-023-0438-S**	**0.184**	**4.67**	**0.87**	**3.88**	**3.43**	**0.60**
C0312-023-0500-M	**0.312**	**7.93**	**0.023**	**0.58**	**0.500**	**12.70**	**0.206**	**5.23**	**0.162**	**4.11**	**1.04**	**4.64**	**3.55**	**0.62**	**C0312-023-0500-S**	**0.206**	**5.23**	**0.87**	**3.87**	**2.96**	**0.52**
C0312-023-0563-M	**0.312**	**7.93**	**0.023**	**0.58**	**0.563**	**14.30**	**0.228**	**5.79**	**0.177**	**4.50**	**1.05**	**4.65**	**3.12**	**0.55**	**C0312-023-0563-S**	**0.228**	**5.79**	**0.87**	**3.87**	**2.60**	**0.45**
C0312-023-0625-M	**0.312**	**7.93**	**0.023**	**0.58**	**0.625**	**15.88**	**0.250**	**6.34**	**0.193**	**4.89**	**1.05**	**4.66**	**2.79**	**0.49**	**C0312-023-0625-S**	**0.250**	**6.34**	**0.87**	**3.88**	**2.32**	**0.41**
C0312-023-0688-M	**0.312**	**7.93**	**0.023**	**0.58**	**0.688**	**17.48**	**0.272**	**6.91**	**0.209**	**5.30**	**1.04**	**4.64**	**2.51**	**0.44**	**C0312-023-0688-S**	**0.272**	**6.91**	**0.87**	**3.87**	**2.09**	**0.37**
C0312-023-0750-M	**0.312**	**7.93**	**0.023**	**0.58**	**0.750**	**19.05**	**0.294**	**7.46**	**0.224**	**5.69**	**1.04**	**4.65**	**2.29**	**0.40**	**C0312-023-0750-S**	**0.294**	**7.46**	**0.87**	**3.87**	**1.91**	**0.33**
C0312-023-0813-M	**0.312**	**7.93**	**0.023**	**0.58**	**0.813**	**20.65**	**0.316**	**8.03**	**0.240**	**6.09**	**1.04**	**4.64**	**2.10**	**0.37**	**C0312-023-0813-S**	**0.316**	**8.03**	**0.87**	**3.87**	**1.75**	**0.31**
C0312-023-0875-M	**0.312**	**7.93**	**0.023**	**0.58**	**0.875**	**22.23**	**0.337**	**8.57**	**0.255**	**6.47**	**1.05**	**4.66**	**1.95**	**0.34**	**C0312-023-0875-S**	**0.337**	**8.57**	**0.87**	**3.88**	**1.62**	**0.28**
C0312-023-0938-M	**0.312**	**7.93**	**0.023**	**0.58**	**0.938**	**23.83**	**0.360**	**9.14**	**0.271**	**6.87**	**1.05**	**4.66**	**1.81**	**0.32**	**C0312-023-0938-S**	**0.360**	**9.14**	**0.87**	**3.88**	**1.51**	**0.26**
C0312-023-1000-M	**0.312**	**7.93**	**0.023**	**0.58**	**1.000**	**25.40**	**0.382**	**9.70**	**0.286**	**7.28**	**1.04**	**4.65**	**1.69**	**0.30**	**C0312-023-1000-S**	**0.382**	**9.70**	**0.87**	**3.87**	**1.41**	**0.25**
C0312-023-1250-M	**0.312**	**7.93**	**0.023**	**0.58**	**1.250**	**31.75**	**0.470**	**11.93**	**0.349**	**8.86**	**1.05**	**4.65**	**1.34**	**0.23**	**C0312-023-1250-S**	**0.470**	**11.93**	**0.87**	**3.87**	**1.12**	**0.20**
C0312-023-1375-M	**0.312**	**7.93**	**0.023**	**0.58**	**1.375**	**34.93**	**0.515**	**13.07**	**0.381**	**9.68**	**1.04**	**4.63**	**1.21**	**0.21**	**C0312-023-1375-S**	**0.515**	**13.07**	**0.87**	**3.86**	**1.01**	**0.18**
C0312-023-1500-M	**0.312**	**7.93**	**0.023**	**0.58**	**1.500**	**38.10**	**0.558**	**14.16**	**0.411**	**10.44**	**1.05**	**4.65**	**1.11**	**0.19**	**C0312-023-1500-S**	**0.558**	**14.16**	**0.87**	**3.88**	**0.93**	**0.16**
C0312-023-1750-M	**0.312**	**7.93**	**0.023**	**0.58**	**1.750**	**44.45**	**0.645**	**16.37**	**0.472**	**11.99**	**1.05**	**4.67**	**0.95**	**0.17**	**C0312-023-1750-S**	**0.645**	**16.37**	**0.87**	**3.89**	**0.79**	**0.14**
C0312-023-2000-M	**0.312**	**7.93**	**0.023**	**0.58**	**2.000**	**50.80**	**0.736**	**18.71**	**0.539**	**13.69**	**1.04**	**4.61**	**0.82**	**0.14**	**C0312-023-2000-S**	**0.736**	**18.71**	**0.86**	**3.84**	**0.68**	**0.12**
C0312-023-2250-M	**0.312**	**7.93**	**0.023**	**0.58**	**2.250**	**57.15**	**0.823**	**20.90**	**0.600**	**15.23**	**1.04**	**4.63**	**0.73**	**0.13**	**C0312-023-2250-S**	**0.823**	**20.90**	**0.87**	**3.86**	**0.61**	**0.11**
C0312-023-2500-M	**0.312**	**7.93**	**0.023**	**0.58**	**2.500**	**63.50**	**0.908**	**23.06**	**0.658**	**16.72**	**1.05**	**4.67**	**0.66**	**0.12**	**C0312-023-2500-S**	**0.908**	**23.06**	**0.88**	**3.89**	**0.55**	**0.10**
C0312-026-0438-M	**0.312**	**7.93**	**0.026**	**0.66**	**0.438**	**11.13**	**0.183**	**4.64**	**0.145**	**3.68**	**2.13**	**9.45**	**8.33**	**1.46**	**C0312-026-0438-S**	**0.183**	**4.64**	**1.77**	**7.88**	**6.94**	**1.21**
C0312-026-0500-M	**0.312**	**7.93**	**0.026**	**0.66**	**0.500**	**12.70**	**0.205**	**5.22**	**0.161**	**4.09**	**2.12**	**9.41**	**7.18**	**1.26**	**C0312-026-0500-S**	**0.205**	**5.22**	**1.76**	**7.84**	**5.98**	**1.05**
C0312-026-0563-M	**0.312**	**7.93**	**0.026**	**0.66**	**0.563**	**14.30**	**0.227**	**5.77**	**0.176**	**4.48**	**2.11**	**9.39**	**6.29**	**1.10**	**C0312-026-0563-S**	**0.227**	**5.77**	**1.76**	**7.82**	**5.24**	**0.92**
C0312-026-0625-M	**0.312**	**7.93**	**0.026**	**0.66**	**0.625**	**15.88**	**0.249**	**6.31**	**0.191**	**4.86**	**2.11**	**9.39**	**5.61**	**0.98**	**C0312-026-0625-S**	**0.249**	**6.31**	**1.76**	**7.82**	**4.67**	**0.82**
C0312-026-0688-M	**0.312**	**7.93**	**0.026**	**0.66**	**0.688**	**17.48**	**0.270**	**6.87**	**0.206**	**5.24**	**2.11**	**9.38**	**5.05**	**0.88**	**C0312-026-0688-S**	**0.270**	**6.87**	**1.76**	**7.82**	**4.21**	**0.74**
C0312-026-0750-M	**0.312**	**7.93**	**0.026**	**0.66**	**0.750**	**19.05**	**0.291**	**7.40**	**0.221**	**5.61**	**2.11**	**9.41**	**4.61**	**0.81**	**C0312-026-0750-S**	**0.291**	**7.40**	**1.76**	**7.84**	**3.84**	**0.67**
C0312-026-0813-M	**0.312**	**7.93**	**0.026**	**0.66**	**0.813**	**20.65**	**0.313**	**7.96**	**0.236**	**6.00**	**2.11**	**9.38**	**4.22**	**0.74**	**C0312-026-0813-S**	**0.313**	**7.96**	**1.76**	**7.82**	**3.52**	**0.62**
C0312-026-0875-M	**0.312**	**7.93**	**0.026**	**0.66**	**0.875**	**22.23**	**0.334**	**8.49**	**0.251**	**6.37**	**2.11**	**9.41**	**3.91**	**0.68**	**C0312-026-0875-S**	**0.334**	**8.49**	**1.76**	**7.84**	**3.26**	**0.57**
C0312-026-0938-M	**0.312**	**7.93**	**0.026**	**0.66**	**0.938**	**23.83**	**0.356**	**9.04**	**0.266**	**6.75**	**2.11**	**9.40**	**3.63**	**0.64**	**C0312-026-0938-S**	**0.356**	**9.04**	**1.76**	**7.83**	**3.02**	**0.53**
C0312-026-1000-M	**0.312**	**7.93**	**0.026**	**0.66**	**1.000**	**25.40**	**0.377**	**9.58**	**0.281**	**7.13**	**2.11**	**9.39**	**3.39**	**0.59**	**C0312-026-1000-S**	**0.377**	**9.58**	**1.76**	**7.82**	**2.82**	**0.49**
C0312-026-1250-M	**0.312**	**7.93**	**0.026**	**0.66**	**1.250**	**31.75**	**0.463**	**11.77**	**0.341**	**8.65**	**2.11**	**9.38**	**2.68**	**0.47**	**C0312-026-1250-S**	**0.463**	**11.77**	**1.76**	**7.81**	**2.23**	**0.39**
C0312-026-1500-M	**0.312**	**7.93**	**0.026**	**0.66**	**1.500**	**38.10**	**0.549**	**13.94**	**0.400**	**10.16**	**2.11**	**9.39**	**2.22**	**0.39**	**C0312-026-1500-S**	**0.549**	**13.94**	**1.76**	**7.82**	**1.85**	**0.32**
C0312-026-1750-M	**0.312**	**7.93**	**0.026**	**0.66**	**1.750**	**44.45**	**0.635**	**16.13**	**0.460**	**11.69**	**2.11**	**9.37**	**1.89**	**0.33**	**C0312-026-1750-S**	**0.635**	**16.13**	**1.76**	**7.81**	**1.57**	**0.28**
C0312-026-2000-M	**0.312**	**7.93**	**0.026**	**0.66**	**2.000**	**50.80**	**0.720**	**18.30**	**0.519**	**13.19**	**2.11**	**9.39**	**1.65**	**0.29**	**C0312-026-2000-S**	**0.720**	**18.30**	**1.76**	**7.82**	**1.37**	**0.24**
C0312-026-2250-M	**0.312**	**7.93**	**0.026**	**0.66**	**2.250**	**57.15**	**0.807**	**20.49**	**0.580**	**14.72**	**2.11**	**9.37**	**1.46**	**0.26**	**C0312-026-2250-S**	**0.807**	**20.49**	**1.76**	**7.81**	**1.22**	**0.21**
C0312-026-2500-M	**0.312**	**7.93**	**0.026**	**0.66**	**2.500**	**63.50**	**0.893**	**22.68**	**0.640**	**16.25**	**2.11**	**9.36**	**1.31**	**0.23**	**C0312-026-2500-S**	**0.893**	**22.68**	**1.75**	**7.80**	**1.09**	**0.19**
C0312-028-0380-M	**0.312**	**7.93**	**0.028**	**0.71**	**0.380**	**9.65**	**0.172**	**4.38**	**0.143**	**3.62**	**2.70**	**12.00**	**13.00**	**2.28**	**C0312-028-0380-S**	**0.172**	**4.38**	**2.25**	**10.00**	**10.83**	**1.90**
C0312-028-0500-M	**0.312**	**7.93**	**0.028**	**0.71**	**0.500**	**12.70**	**0.226**	**5.75**	**0.143**	**3.62**	**3.56**	**15.83**	**13.00**	**2.28**	**C0312-028-0500-S**	**0.252**	**6.40**	**2.68**	**11.94**	**10.83**	**1.90**
C0312-028-0630-M	**0.312**	**7.93**	**0.028**	**0.71**	**0.630**	**16.00**	**0.307**	**7.79**	**0.160**	**4.07**	**3.56**	**15.83**	**11.00**	**1.93**	**C0312-028-0630-S**	**0.337**	**8.56**	**2.68**	**11.94**	**9.16**	**1.60**
C0312-028-0690-M	**0.312**	**7.93**	**0.028**	**0.71**	**0.690**	**17.53**	**0.270**	**6.87**	**0.206**	**5.23**	**3.23**	**14.37**	**7.70**	**1.35**	**C0312-028-0690-S**	**0.271**	**6.90**	**2.68**	**11.94**	**6.41**	**1.12**
C0312-028-1130-M	**0.312**	**7.93**	**0.028**	**0.71**	**1.130**	**28.70**	**0.418**	**10.63**	**0.286**	**7.25**	**3.56**	**15.83**	**5.00**	**0.88**	**C0312-028-1130-S**	**0.485**	**12.33**	**2.68**	**11.94**	**4.17**	**0.73**
C0312-028-1310-M	**0.312**	**7.93**	**0.028**	**0.71**	**1.310**	**33.27**	**0.506**	**12.86**	**0.383**	**9.72**	**2.81**	**12.51**	**3.50**	**0.61**	**C0312-028-1310-S**	**0.506**	**12.86**	**2.34**	**10.42**	**2.92**	**0.51**

Part Numbers with an "*" are squared and not ground. **Part Numbers in bold** represent the newly expanded Associated Spring RAYMOND compression spring offering.

MUSIC WIRE															STAINLESS STEEL						
Catalog #	Outside Diameter (OD)		Wire Diameter (d)		Free Length (L) Approx		Load Length (L_1)		Solid Height (Sh) Approx		Load (P) at L_1		Spring Rate (R)		Catalog #	Load Length (L_1)		Load (P) at L_1		Spring Rate (R)	
	in	mm	in	mm	in	mm	in	mm	in	mm	lb	N	lb/in	N/mm		in	mm	lb	N	lb/in	N/mm
C0312-028-1380-M	**0.312**	**7.93**	**0.028**	**0.71**	**1.380**	**35.05**	**0.503**	**12.77**	**0.365**	**9.28**	**3.25**	**14.44**	**3.70**	**0.65**	**C0312-028-1380-S**	**0.509**	**12.93**	**2.68**	**11.94**	**3.08**	**0.54**
C0312-028-2310-M	**0.312**	**7.93**	**0.028**	**0.71**	**2.310**	**58.67**	**0.877**	**22.28**	**0.656**	**16.65**	**2.72**	**12.11**	**1.90**	**0.33**	**C0312-028-2310-S**	**0.877**	**22.28**	**2.27**	**10.09**	**1.58**	**0.28**
C0312-030-0560-M	**0.312**	**7.93**	**0.030**	**0.76**	**0.560**	**14.22**	**0.245**	**6.23**	**0.199**	**5.06**	**3.78**	**16.80**	**12.00**	**2.10**	**C0312-030-0560-S**	**0.245**	**6.23**	**3.15**	**13.99**	**10.00**	**1.75**
C0312-030-0780-M	**0.312**	**7.93**	**0.030**	**0.76**	**0.780**	**19.81**	**0.320**	**8.13**	**0.251**	**6.38**	**4.00**	**17.79**	**8.70**	**1.52**	**C0312-030-0780-S**	**0.330**	**8.38**	**3.26**	**14.51**	**7.25**	**1.27**
C0312-030-0880-M	**0.312**	**7.93**	**0.030**	**0.76**	**0.880**	**22.35**	**0.384**	**9.76**	**0.251**	**6.38**	**4.31**	**19.19**	**8.70**	**1.52**	**C0312-030-0880-S**	**0.430**	**10.92**	**3.26**	**14.51**	**7.25**	**1.27**
C0312-030-1060-M	**0.312**	**7.93**	**0.030**	**0.76**	**1.060**	**26.92**	**0.435**	**11.04**	**0.300**	**7.62**	**4.31**	**19.19**	**6.90**	**1.21**	**C0312-030-1060-S**	**0.492**	**12.51**	**3.26**	**14.51**	**5.75**	**1.01**
C0312-030-1250-M	**0.312**	**7.93**	**0.030**	**0.76**	**1.250**	**31.75**	**0.546**	**13.88**	**0.443**	**11.26**	**3.03**	**13.46**	**4.30**	**0.75**	**C0312-030-1250-S**	**0.546**	**13.88**	**2.52**	**11.21**	**3.58**	**0.63**
C0312-030-1310-M	**0.312**	**7.93**	**0.030**	**0.76**	**1.310**	**33.27**	**0.596**	**15.14**	**0.493**	**12.53**	**2.71**	**12.07**	**3.80**	**0.67**	**C0312-030-1310-S**	**0.596**	**15.14**	**2.26**	**10.05**	**3.17**	**0.55**
C0312-030-1380-M	**0.312**	**7.93**	**0.030**	**0.76**	**1.380**	**35.05**	**0.606**	**15.40**	**0.493**	**12.53**	**2.94**	**13.08**	**3.80**	**0.67**	**C0312-030-1380-S**	**0.606**	**15.40**	**2.45**	**10.89**	**3.17**	**0.55**
C0312-047-0375-M	**0.312**	**7.93**	**0.047**	**1.19**	**0.375**	**9.53**	**0.262**	**6.66**	**0.255**	**6.47**	**13.08**	**58.20**	**116.19**	**20.33**	**C0312-047-0375-S**	**0.262**	**6.66**	**10.90**	**48.48**	**96.79**	**16.94**
C0312-047-0438-M	**0.312**	**7.93**	**0.047**	**1.19**	**0.438**	**11.13**	**0.304**	**7.72**	**0.295**	**7.48**	**12.71**	**56.52**	**94.91**	**16.61**	**C0312-047-0438-S**	**0.304**	**7.72**	**10.58**	**47.08**	**79.06**	**13.84**
C0312-047-0500-M	**0.312**	**7.93**	**0.047**	**1.19**	**0.500**	**12.70**	**0.342**	**8.69**	**0.330**	**8.38**	**12.69**	**56.47**	**80.42**	**14.07**	**C0312-047-0500-S**	**0.342**	**8.69**	**10.57**	**47.04**	**66.99**	**11.72**
C0312-047-0563-M	**0.312**	**7.93**	**0.047**	**1.19**	**0.563**	**14.30**	**0.380**	**9.66**	**0.365**	**9.28**	**12.75**	**56.72**	**69.76**	**12.21**	**C0312-047-0563-S**	**0.380**	**9.66**	**10.62**	**47.25**	**58.11**	**10.17**
C0312-047-0625-M	**0.312**	**7.93**	**0.047**	**1.19**	**0.625**	**15.88**	**0.419**	**10.63**	**0.401**	**10.19**	**12.70**	**56.47**	**61.49**	**10.76**	**C0312-047-0625-S**	**0.419**	**10.63**	**10.58**	**47.04**	**51.22**	**8.96**
C0312-047-0688-M	**0.312**	**7.93**	**0.047**	**1.19**	**0.688**	**17.48**	**0.457**	**11.60**	**0.437**	**11.09**	**12.74**	**56.68**	**55.06**	**9.64**	**C0312-047-0688-S**	**0.457**	**11.60**	**10.61**	**47.21**	**45.87**	**8.03**
C0312-047-0750-M	**0.312**	**7.93**	**0.047**	**1.19**	**0.750**	**19.05**	**0.495**	**12.57**	**0.472**	**12.00**	**12.69**	**56.46**	**49.77**	**8.71**	**C0312-047-0750-S**	**0.495**	**12.57**	**10.57**	**47.03**	**41.46**	**7.26**
C0312-047-0813-M	**0.312**	**7.93**	**0.047**	**1.19**	**0.813**	**20.65**	**0.562**	**14.28**	**0.544**	**13.81**	**10.49**	**46.68**	**41.81**	**7.32**	**C0312-047-0813-S**	**0.562**	**14.28**	**8.74**	**38.88**	**34.83**	**6.09**
C0312-047-0875-M	**0.312**	**7.93**	**0.047**	**1.19**	**0.875**	**22.23**	**0.600**	**15.24**	**0.579**	**14.71**	**10.65**	**47.38**	**38.73**	**6.78**	**C0312-047-0875-S**	**0.600**	**15.24**	**8.87**	**39.47**	**32.26**	**5.65**
C0312-047-0938-M	**0.312**	**7.93**	**0.047**	**1.19**	**0.938**	**23.83**	**0.638**	**16.22**	**0.615**	**15.62**	**10.80**	**48.03**	**36.04**	**6.31**	**C0312-047-0938-S**	**0.638**	**16.22**	**8.99**	**40.01**	**30.02**	**5.25**
C0312-047-1000-M	**0.312**	**7.93**	**0.047**	**1.19**	**1.000**	**25.40**	**0.705**	**17.92**	**0.686**	**17.43**	**9.33**	**41.50**	**31.67**	**5.54**	**C0312-047-1000-S**	**0.705**	**17.92**	**7.77**	**34.57**	**26.38**	**4.62**
C0312-047-1250-M	**0.312**	**7.93**	**0.047**	**1.19**	**1.250**	**31.75**	**0.801**	**20.34**	**0.757**	**19.24**	**12.69**	**56.45**	**28.24**	**4.94**	**C0312-047-1250-S**	**0.801**	**20.34**	**10.57**	**47.02**	**23.52**	**4.12**
C0312-047-1375-M	**0.312**	**7.93**	**0.047**	**1.19**	**1.375**	**34.93**	**0.877**	**22.27**	**0.828**	**21.04**	**12.70**	**56.48**	**25.49**	**4.46**	**C0312-047-1375-S**	**0.877**	**22.27**	**10.58**	**47.04**	**21.23**	**3.72**
C0312-047-1500-M	**0.312**	**7.93**	**0.047**	**1.19**	**1.500**	**38.10**	**0.953**	**24.22**	**0.900**	**22.85**	**12.69**	**56.46**	**23.22**	**4.06**	**C0312-047-1500-S**	**0.953**	**24.22**	**10.57**	**47.03**	**19.34**	**3.38**
C0312-047-1750-M	**0.312**	**7.93**	**0.047**	**1.19**	**1.750**	**44.45**	**1.106**	**28.09**	**1.042**	**26.47**	**12.70**	**56.49**	**19.72**	**3.45**	**C0312-047-1750-S**	**1.106**	**28.09**	**10.58**	**47.06**	**16.43**	**2.87**
C0312-047-2000-M	**0.312**	**7.93**	**0.047**	**1.19**	**2.000**	**50.80**	**1.259**	**31.98**	**1.185**	**30.09**	**12.69**	**56.47**	**17.13**	**3.00**	**C0312-047-2000-S**	**1.259**	**31.98**	**10.57**	**47.04**	**14.27**	**2.50**
C0312-047-2250-M	**0.312**	**7.93**	**0.047**	**1.19**	**2.250**	**57.15**	**1.412**	**35.87**	**1.327**	**33.71**	**12.69**	**56.44**	**15.14**	**2.65**	**C0312-047-2250-S**	**1.412**	**35.87**	**10.57**	**47.01**	**12.61**	**2.21**
C0312-047-2500-M	**0.312**	**7.93**	**0.047**	**1.19**	**2.500**	**63.50**	**1.565**	**39.74**	**1.469**	**37.32**	**12.69**	**56.46**	**13.57**	**2.37**	**C0312-047-2500-S**	**1.565**	**39.74**	**10.57**	**47.03**	**11.30**	**1.98**
C0312-047-2750-M	**0.312**	**7.93**	**0.047**	**1.19**	**2.750**	**69.85**	**1.718**	**43.63**	**1.612**	**40.95**	**12.69**	**56.44**	**12.29**	**2.15**	**C0312-047-2750-S**	**1.718**	**43.63**	**10.57**	**47.01**	**10.24**	**1.79**
C0312-047-3000-M	**0.312**	**7.93**	**0.047**	**1.19**	**3.000**	**76.20**	**1.870**	**47.49**	**1.754**	**44.54**	**12.71**	**56.52**	**11.24**	**1.97**	**C0312-047-3000-S**	**1.870**	**47.49**	**10.58**	**47.08**	**9.36**	**1.64**
D11550*	0.340	8.63	0.025	0.63	0.630	16.00	0.201	5.10	0.161	4.10	2.25	10.00	5.09	0.89	D21550*	0.201	5.10	1.87	8.33	4.23	0.74
D11560*	0.340	8.63	0.025	0.63	0.965	24.50	0.280	7.10	0.211	5.36	2.25	10.00	3.26	0.57	D21560*	0.280	7.10	1.87	8.33	2.69	0.47
D11570*	0.340	8.63	0.025	0.63	1.457	37.00	0.402	10.20	0.285	7.25	2.25	10.00	2.11	0.37	D21570*	0.402	10.20	1.87	8.33	1.77	0.31
D11580*	0.340	8.63	0.025	0.63	2.165	55.00	0.563	14.30	0.385	9.77	2.25	10.00	1.43	0.25	D21580*	0.563	14.30	1.87	8.33	1.20	0.21
D11590*	0.340	8.63	0.025	0.63	3.169	80.50	0.811	20.60	0.533	13.55	2.25	10.00	0.97	0.17	D21590*	0.811	20.60	1.87	8.33	0.80	0.14
D11750*	0.346	8.80	0.031	0.80	0.571	14.50	0.240	6.10	0.205	5.20	4.39	19.52	13.26	2.32	D21750*	0.240	6.10	3.66	16.26	11.03	1.93
D11760*	0.346	8.80	0.031	0.80	0.846	21.50	0.331	8.40	0.268	6.80	4.39	19.52	8.46	1.48	D21760*	0.331	8.40	3.66	16.26	7.03	1.23
D11780*	0.346	8.80	0.031	0.80	1.260	32.00	0.472	12.00	0.362	9.20	4.39	19.52	5.49	0.96	D21780*	0.472	12.00	3.66	16.26	4.57	0.80
D11780*	0.346	8.80	0.031	0.80	1.850	47.00	0.657	16.70	0.488	12.40	4.39	19.52	3.71	0.65	D21780*	0.657	16.70	3.66	16.26	3.09	0.54
D11790*	0.346	8.80	0.031	0.80	2.677	68.00	0.937	23.80	0.677	17.20	4.39	19.52	2.51	0.44	D21790*	0.937	23.80	3.66	16.26	2.11	0.37
C0353-032-0688-M	**0.353**	**8.97**	**0.032**	**0.81**	**0.688**	**17.46**	**0.274**	**6.96**	**0.211**	**5.37**	**4.39**	**19.55**	**10.63**	**1.86**	**C0353-032-0688-S**	**0.311**	**7.90**	**3.48**	**15.48**	**9.24**	**1.62**
C0353-032-0750-M	**0.353**	**8.97**	**0.032**	**0.81**	**0.750**	**19.05**	**0.295**	**7.50**	**0.226**	**5.73**	**4.39**	**19.55**	**9.66**	**1.69**	**C0353-032-0750-S**	**0.336**	**8.53**	**3.48**	**15.48**	**8.40**	**1.47**
C0353-032-0813-M	**0.353**	**8.97**	**0.032**	**0.81**	**0.813**	**20.64**	**0.316**	**8.03**	**0.240**	**6.10**	**4.39**	**19.55**	**8.86**	**1.55**	**C0353-032-0813-S**	**0.361**	**9.16**	**3.48**	**15.48**	**7.70**	**1.35**
C0353-032-0875-M	**0.353**	**8.97**	**0.032**	**0.81**	**0.875**	**22.23**	**0.337**	**8.57**	**0.255**	**6.47**	**4.39**	**19.55**	**8.17**	**1.43**	**C0353-032-0875-S**	**0.385**	**9.79**	**3.48**	**15.48**	**7.11**	**1.24**
C0353-032-0938-M	**0.353**	**8.97**	**0.032**	**0.81**	**0.938**	**23.81**	**0.358**	**9.10**	**0.269**	**6.83**	**4.39**	**19.55**	**7.59**	**1.33**	**C0353-032-0938-S**	**0.410**	**10.42**	**3.48**	**15.48**	**6.60**	**1.15**
C0353-032-1000-M	**0.353**	**8.97**	**0.032**	**0.81**	**1.000**	**25.40**	**0.379**	**9.64**	**0.283**	**7.20**	**4.39**	**19.55**	**7.08**	**1.24**	**C0353-032-1000-S**	**0.435**	**11.05**	**3.48**	**15.48**	**6.16**	**1.08**
C0353-032-1125-M	**0.353**	**8.97**	**0.032**	**0.81**	**1.125**	**28.58**	**0.422**	**10.71**	**0.312**	**7.93**	**4.39**	**19.55**	**6.25**	**1.09**	**C0353-032-1125-S**	**0.484**	**12.30**	**3.48**	**15.48**	**5.43**	**0.95**
C0353-032-1250-M	**0.353**	**8.97**	**0.032**	**0.81**	**1.250**	**31.75**	**0.464**	**11.78**	**0.341**	**8.67**	**4.39**	**19.55**	**5.59**	**0.98**	**C0353-032-1250-S**	**0.534**	**13.56**	**3.48**	**15.48**	**4.86**	**0.85**
C0353-032-1375-M	**0.353**	**8.97**	**0.032**	**0.81**	**1.375**	**34.93**	**0.506**	**12.85**	**0.370**	**9.40**	**4.39**	**19.55**	**5.06**	**0.88**	**C0353-032-1375-S**	**0.583**	**14.82**	**3.48**	**15.48**	**4.40**	**0.77**
C0353-032-1500-M	**0.353**	**8.97**	**0.032**	**0.81**	**1.500**	**38.10**	**0.548**	**13.92**	**0.399**	**10.13**	**4.39**	**19.55**	**4.62**	**0.81**	**C0353-032-1500-S**	**0.633**	**16.08**	**3.48**	**15.48**	**4.01**	**0.70**
C0353-032-1625-M	**0.353**	**8.97**	**0.032**	**0.81**	**1.625**	**41.28**	**0.590**	**14.99**	**0.428**	**10.87**	**4.39**	**19.55**	**4.25**	**0.74**	**C0353-032-1625-S**	**0.682**	**17.33**	**3.48**	**15.48**	**3.69**	**0.65**
C0353-032-1750-M	**0.353**	**8.97**	**0.032**	**0.81**	**1.750**	**44.45**	**0.632**	**16.06**	**0.457**	**11.60**	**4.39**	**19.55**	**3.93**	**0.69**	**C0353-032-1750-S**	**0.732**	**18.59**	**3.48**	**15.48**	**3.42**	**0.60**
C0353-032-1875-M	**0.353**	**8.97**	**0.032**	**0.81**	**1.875**	**47.63**	**0.674**	**17.13**	**0.486**	**12.33**	**4.39**	**19.55**	**3.66**	**0.64**	**C0353-032-1875-S**	**0.782**	**19.85**	**3.48**	**15.48**	**3.18**	**0.56**
C0353-032-2000-M	**0.353**	**8.97**	**0.032**	**0.81**	**2.000**	**50.80**	**0.716**	**18.20**	**0.514**	**13.07**	**4.39**	**19.55**	**3.42**	**0.60**	**C0353-032-2000-S**	**0.831**	**21.11**	**3.48**	**15.48**	**2.98**	**0.52**
C0353-032-2125-M	**0.353**	**8.97**	**0.032**	**0.81**	**2.125**	**53.98**	**0.759**	**19.27**	**0.543**	**13.80**	**4.39**	**19.55**	**3.22**	**0.56**	**C0353-032-2125-S**	**0.881**	**22.37**	**3.48**	**15.48**	**2.80**	**0.49**
C0353-032-2250-M	**0.353**	**8.97**	**0.032**	**0.81**	**2.250**	**57.15**	**0.801**	**20.34**	**0.572**	**14.53**	**4.39**	**19.55**	**3.03**	**0.53**	**C0353-032-2250-S**	**0.930**	**23.62**	**3.48**	**15.48**	**2.64**	**0.46**
C0353-032-2375-M	**0.353**	**8.97**	**0.032**	**0.81**	**2.375**	**60.33**	**0.843**	**21.41**	**0.601**	**15.27**	**4.39**	**19.55**	**2.87**	**0.50**	**C0353-032-2375-S**	**0.980**	**24.88**	**3.48**	**15.48**	**2.49**	**0.44**
C0353-032-2500-M	**0.353**	**8.97**	**0.032**	**0.81**	**2.500**	**63.50**	**0.885**	**22.48**	**0.630**	**16.00**	**4.39**	**19.55**	**2.72**	**0.48**	**C0353-032-2500-S**	**1.029**	**26.14**	**3.48**	**15.48**	**2.37**	**0.41**
C0353-032-2625-M	**0.353**	**8.97**	**0.032**	**0.81**	**2.625**	**66.68**	**0.927**	**23.55**	**0.659**	**16.74**	**4.39**	**19.55**	**2.59**	**0.45**	**C0353-032-2625-S**	**1.079**	**27.40**	**3.48**	**15.48**	**2.25**	**0.39**
C0353-032-2750-M	**0.353**	**8.97**	**0.032**	**0.81**	**2.750**	**69.85**	**0.969**	**24.62**	**0.688**	**17.47**	**4.39**	**19.55**	**2.47**	**0.43**	**C0353-032-2750-S**	**1.128**	**28.66**	**3.48**	**15.48**	**2.15**	**0.38**
C0353-032-2875-M	**0.353**	**8.97**	**0.032**	**0.81**	**2.875**	**73.03**	**1.011**	**25.69**	**0.717**	**18.20**	**4.39**	**19.55**	**2.36**	**0.41**	**C0353-032-2875-S**	**1.178**	**29.91**	**3.48**	**15.48**	**2.05**	**0.36**
C0353-032-3000-M	**0.353**	**8.97**	**0.032**	**0.81**	**3.000**	**76.20**	**1.054**	**26.76**	**0.746**	**18.94**	**4.39**	**19.55**	**2.26**	**0.39**	**C0353-032-3000-S**	**1.227**	**31.17**	**3.48**	**15.48**	**1.96**	**0.34**
C0353-032-3250-M	**0.353**	**8.97**	**0.032**	**0.81**	**3.250**	**82.55**	**1.138**	**28.90**	**0.803**	**20.40**	**4.39**	**19.55**	**2.08**	**0.36**	**C0353-032-3250-S**	**1.326**	**33.69**	**3.48**	**15.48**	**1.81**	**0.32**
C0353-032-3500-M	**0.353**	**8.97**	**0.032**	**0.81**	**3.500**	**88.90**	**1.222**	**31.04**	**0.861**	**21.87**	**4.39**	**19.55**	**1.93**	**0.34**	**C0353-032-3500-S**	**1.425**	**36.20**	**3.48**	**15.48**	**1.68**	**0.29**
C0353-032-3750-M	**0.353**	**8.97**	**0.032**	**0.81**	**3.750**	**95.25**	**1.306**	**33.18**	**0.919**	**23.34**	**4.39**	**19.55**	**1.80**	**0.31**	**C0353-032-3750-S**	**1.524**	**38.72**	**3.48**	**15.48**	**1.56**	**0.27**

FOR INFORMATION ON ALTERNATIVE FINISHES, SEE PAGE 311

Part Numbers with an "*" are squared and not ground. **Part Numbers in bold** represent the newly expanded Associated Spring RAYMOND compression spring offering.

(OD) 0.353 - 0.353

MUSIC WIRE															STAINLESS STEEL					
Catalog #	Outside Diameter (OD)		Wire Diameter (d)		Free Length (L) Approx		Load Length (L_1)		Solid Height (Sh) Approx		Load (P) at L_1		Spring Rate (R)		Catalog #	Load Length (L_1)		Load (P) at L_1		Spring Rate (R)	
	in	mm	in	mm	in	mm	in	mm	in	mm	lb	N	lb/in	N/mm		in	mm	lb	N	lb/in	N/mm
C0353-032-4000-M	**0.353**	**8.97**	**0.032**	**0.81**	**4.000**	**101.60**	**1.391**	**35.32**	**0.977**	**24.80**	**4.39**	**19.55**	**1.68**	**0.29**	**C0353-032-4000-S**	**1.623**	**41.24**	**3.48**	**15.48**	**1.46**	**0.26**
C0353-032-4250-M	**0.353**	**8.97**	**0.032**	**0.81**	**4.250**	**107.95**	**1.475**	**37.46**	**1.034**	**26.27**	**4.39**	**19.55**	**1.58**	**0.28**	**C0353-032-4250-S**	**1.722**	**43.75**	**3.48**	**15.48**	**1.38**	**0.24**
C0353-032-4500-M	**0.353**	**8.97**	**0.032**	**0.81**	**4.500**	**114.30**	**1.559**	**39.60**	**1.092**	**27.74**	**4.39**	**19.55**	**1.49**	**0.26**	**C0353-032-4500-S**	**1.822**	**46.27**	**3.48**	**15.48**	**1.30**	**0.23**
C0353-032-4750-M	**0.353**	**8.97**	**0.032**	**0.81**	**4.750**	**120.65**	**1.643**	**41.74**	**1.150**	**29.21**	**4.39**	**19.55**	**1.41**	**0.25**	**C0353-032-4750-S**	**1.921**	**48.78**	**3.48**	**15.48**	**1.23**	**0.22**
C0353-032-5000-M	**0.353**	**8.97**	**0.032**	**0.81**	**5.000**	**127.00**	**1.728**	**43.88**	**1.208**	**30.67**	**4.39**	**19.55**	**1.34**	**0.24**	**C0353-032-5000-S**	**2.020**	**51.30**	**3.48**	**15.48**	**1.17**	**0.20**
C0353-032-5250-M	**0.353**	**8.97**	**0.032**	**0.81**	**5.250**	**133.35**	**1.812**	**46.02**	**1.265**	**32.14**	**4.39**	**19.55**	**1.28**	**0.22**	**C0353-032-5250-S**	**2.119**	**53.81**	**3.48**	**15.48**	**1.11**	**0.19**
C0353-032-5500-M	**0.353**	**8.97**	**0.032**	**0.81**	**5.500**	**139.70**	**1.896**	**48.16**	**1.323**	**33.61**	**4.39**	**19.55**	**1.22**	**0.21**	**C0353-032-5500-S**	**2.218**	**56.33**	**3.48**	**15.48**	**1.06**	**0.19**
C0353-032-5750-M	**0.353**	**8.97**	**0.032**	**0.81**	**5.750**	**146.05**	**1.980**	**50.30**	**1.381**	**35.07**	**4.39**	**19.55**	**1.17**	**0.20**	**C0353-032-5750-S**	**2.317**	**58.85**	**3.48**	**15.48**	**1.01**	**0.18**
C0353-032-6000-M	**0.353**	**8.97**	**0.032**	**0.81**	**6.000**	**152.40**	**2.065**	**52.44**	**1.439**	**36.54**	**4.39**	**19.55**	**1.12**	**0.20**	**C0353-032-6000-S**	**2.416**	**61.36**	**3.48**	**15.48**	**0.97**	**0.17**
C0353-032-6250-M	**0.353**	**8.97**	**0.032**	**0.81**	**6.250**	**158.75**	**2.149**	**54.58**	**1.496**	**38.01**	**4.39**	**19.55**	**1.07**	**0.19**	**C0353-032-6250-S**	**2.515**	**63.88**	**3.48**	**15.48**	**0.93**	**0.16**
C0353-035-0625-M	**0.353**	**8.97**	**0.035**	**0.89**	**0.625**	**15.88**	**0.277**	**7.02**	**0.226**	**5.73**	**5.64**	**25.10**	**16.19**	**2.83**	**C0353-035-0625-S**	**0.307**	**7.80**	**4.48**	**19.91**	**14.08**	**2.46**
C0353-035-0688-M	**0.353**	**8.97**	**0.035**	**0.89**	**0.688**	**17.46**	**0.300**	**7.61**	**0.243**	**6.17**	**5.64**	**25.10**	**14.55**	**2.55**	**C0353-035-0688-S**	**0.334**	**8.48**	**4.48**	**19.91**	**12.65**	**2.21**
C0353-035-0750-M	**0.353**	**8.97**	**0.035**	**0.89**	**0.750**	**19.05**	**0.323**	**8.20**	**0.260**	**6.61**	**5.64**	**25.10**	**13.21**	**2.31**	**C0353-035-0750-S**	**0.360**	**9.15**	**4.48**	**19.91**	**11.49**	**2.01**
C0353-035-0813-M	**0.353**	**8.97**	**0.035**	**0.89**	**0.813**	**20.64**	**0.346**	**8.80**	**0.277**	**7.04**	**5.64**	**25.10**	**12.10**	**2.12**	**C0353-035-0813-S**	**0.387**	**9.83**	**4.48**	**19.91**	**10.52**	**1.84**
C0353-035-0875-M	**0.353**	**8.97**	**0.035**	**0.89**	**0.875**	**22.23**	**0.370**	**9.39**	**0.294**	**7.48**	**5.64**	**25.10**	**11.16**	**1.95**	**C0353-035-0875-S**	**0.414**	**10.51**	**4.48**	**19.91**	**9.71**	**1.70**
C0353-035-0938-M	**0.353**	**8.97**	**0.035**	**0.89**	**0.938**	**23.81**	**0.393**	**9.98**	**0.311**	**7.91**	**5.64**	**25.10**	**10.36**	**1.81**	**C0353-035-0938-S**	**0.440**	**11.19**	**4.48**	**19.91**	**9.01**	**1.58**
C0353-035-1000-M	**0.353**	**8.97**	**0.035**	**0.89**	**1.000**	**25.40**	**0.416**	**10.57**	**0.329**	**8.35**	**5.64**	**25.10**	**9.66**	**1.69**	**C0353-035-1000-S**	**0.467**	**11.87**	**4.48**	**19.91**	**8.40**	**1.47**
C0353-035-1125-M	**0.353**	**8.97**	**0.035**	**0.89**	**1.125**	**28.58**	**0.463**	**11.75**	**0.363**	**9.22**	**5.64**	**25.10**	**8.52**	**1.49**	**C0353-035-1125-S**	**0.521**	**13.22**	**4.48**	**19.91**	**7.41**	**1.30**
C0353-035-1250-M	**0.353**	**8.97**	**0.035**	**0.89**	**1.250**	**31.75**	**0.509**	**12.93**	**0.397**	**10.09**	**5.64**	**25.10**	**7.62**	**1.33**	**C0353-035-1250-S**	**0.574**	**14.58**	**4.48**	**19.91**	**6.62**	**1.16**
C0353-035-1375-M	**0.353**	**8.97**	**0.035**	**0.89**	**1.375**	**34.93**	**0.556**	**14.11**	**0.432**	**10.96**	**5.64**	**25.10**	**6.89**	**1.21**	**C0353-035-1375-S**	**0.627**	**15.93**	**4.48**	**19.91**	**5.99**	**1.05**
C0353-035-1500-M	**0.353**	**8.97**	**0.035**	**0.89**	**1.500**	**38.10**	**0.602**	**15.29**	**0.466**	**11.83**	**5.64**	**25.10**	**6.28**	**1.10**	**C0353-035-1500-S**	**0.681**	**17.29**	**4.48**	**19.91**	**5.46**	**0.96**
C0353-035-1625-M	**0.353**	**8.97**	**0.035**	**0.89**	**1.625**	**41.28**	**0.649**	**16.47**	**0.500**	**12.70**	**5.64**	**25.10**	**5.78**	**1.01**	**C0353-035-1625-S**	**0.734**	**18.64**	**4.48**	**19.91**	**5.03**	**0.88**
C0353-035-1750-M	**0.353**	**8.97**	**0.035**	**0.89**	**1.750**	**44.45**	**0.695**	**17.66**	**0.534**	**13.57**	**5.64**	**25.10**	**5.35**	**0.94**	**C0353-035-1750-S**	**0.787**	**20.00**	**4.48**	**19.91**	**4.65**	**0.81**
C0353-035-1875-M	**0.353**	**8.97**	**0.035**	**0.89**	**1.875**	**47.63**	**0.742**	**18.84**	**0.569**	**14.44**	**5.64**	**25.10**	**4.98**	**0.87**	**C0353-035-1875-S**	**0.841**	**21.36**	**4.48**	**19.91**	**4.33**	**0.76**
C0353-035-2000-M	**0.353**	**8.97**	**0.035**	**0.89**	**2.000**	**50.80**	**0.788**	**20.02**	**0.603**	**15.32**	**5.64**	**25.10**	**4.66**	**0.81**	**C0353-035-2000-S**	**0.894**	**22.71**	**4.48**	**19.91**	**4.05**	**0.71**
C0353-035-2125-M	**0.353**	**8.97**	**0.035**	**0.89**	**2.125**	**53.98**	**0.835**	**21.20**	**0.637**	**16.19**	**5.64**	**25.10**	**4.37**	**0.77**	**C0353-035-2125-S**	**0.948**	**24.07**	**4.48**	**19.91**	**3.80**	**0.67**
C0353-035-2250-M	**0.353**	**8.97**	**0.035**	**0.89**	**2.250**	**57.15**	**0.881**	**22.38**	**0.672**	**17.06**	**5.64**	**25.10**	**4.12**	**0.72**	**C0353-035-2250-S**	**1.001**	**25.42**	**4.48**	**19.91**	**3.58**	**0.63**
C0353-035-2375-M	**0.353**	**8.97**	**0.035**	**0.89**	**2.375**	**60.33**	**0.928**	**23.56**	**0.706**	**17.93**	**5.64**	**25.10**	**3.90**	**0.68**	**C0353-035-2375-S**	**1.054**	**26.78**	**4.48**	**19.91**	**3.39**	**0.59**
C0353-035-2500-M	**0.353**	**8.97**	**0.035**	**0.89**	**2.500**	**63.50**	**0.974**	**24.74**	**0.740**	**18.80**	**5.64**	**25.10**	**3.70**	**0.65**	**C0353-035-2500-S**	**1.108**	**28.14**	**4.48**	**19.91**	**3.22**	**0.56**
C0353-035-2625-M	**0.353**	**8.97**	**0.035**	**0.89**	**2.625**	**66.68**	**1.021**	**25.93**	**0.774**	**19.67**	**5.64**	**25.10**	**3.52**	**0.62**	**C0353-035-2625-S**	**1.161**	**29.49**	**4.48**	**19.91**	**3.06**	**0.54**
C0353-035-2750-M	**0.353**	**8.97**	**0.035**	**0.89**	**2.750**	**69.85**	**1.067**	**27.11**	**0.809**	**20.54**	**5.64**	**25.10**	**3.35**	**0.59**	**C0353-035-2750-S**	**1.214**	**30.85**	**4.48**	**19.91**	**2.92**	**0.51**
C0353-035-2875-M	**0.353**	**8.97**	**0.035**	**0.89**	**2.875**	**73.03**	**1.114**	**28.29**	**0.843**	**21.41**	**5.64**	**25.10**	**3.20**	**0.56**	**C0353-035-2875-S**	**1.268**	**32.20**	**4.48**	**19.91**	**2.79**	**0.49**
C0353-035-3000-M	**0.353**	**8.97**	**0.035**	**0.89**	**3.000**	**76.20**	**1.160**	**29.47**	**0.877**	**22.28**	**5.64**	**25.10**	**3.07**	**0.54**	**C0353-035-3000-S**	**1.321**	**33.56**	**4.48**	**19.91**	**2.67**	**0.47**
C0353-035-3250-M	**0.353**	**8.97**	**0.035**	**0.89**	**3.250**	**82.55**	**1.253**	**31.83**	**0.946**	**24.03**	**5.64**	**25.10**	**2.83**	**0.49**	**C0353-035-3250-S**	**1.428**	**36.27**	**4.48**	**19.91**	**2.46**	**0.43**
C0353-035-3500-M	**0.353**	**8.97**	**0.035**	**0.89**	**3.500**	**88.90**	**1.346**	**34.20**	**1.015**	**25.77**	**5.64**	**25.10**	**2.62**	**0.46**	**C0353-035-3500-S**	**1.535**	**38.98**	**4.48**	**19.91**	**2.28**	**0.40**
C0353-035-3750-M	**0.353**	**8.97**	**0.035**	**0.89**	**3.750**	**95.25**	**1.439**	**36.56**	**1.083**	**27.51**	**5.64**	**25.10**	**2.44**	**0.43**	**C0353-035-3750-S**	**1.641**	**41.69**	**4.48**	**19.91**	**2.12**	**0.37**
C0353-035-4000-M	**0.353**	**8.97**	**0.035**	**0.89**	**4.000**	**101.60**	**1.532**	**38.92**	**1.152**	**29.25**	**5.64**	**25.10**	**2.29**	**0.40**	**C0353-035-4000-S**	**1.748**	**44.40**	**4.48**	**19.91**	**1.99**	**0.35**
C0353-035-4250-M	**0.353**	**8.97**	**0.035**	**0.89**	**4.250**	**107.95**	**1.625**	**41.28**	**1.220**	**30.99**	**5.64**	**25.10**	**2.15**	**0.38**	**C0353-035-4250-S**	**1.855**	**47.12**	**4.48**	**19.91**	**1.87**	**0.33**
C0353-035-4500-M	**0.353**	**8.97**	**0.035**	**0.89**	**4.500**	**114.30**	**1.718**	**43.65**	**1.289**	**32.74**	**5.64**	**25.10**	**2.03**	**0.35**	**C0353-035-4500-S**	**1.962**	**49.83**	**4.48**	**19.91**	**1.76**	**0.31**
C0353-035-4750-M	**0.353**	**8.97**	**0.035**	**0.89**	**4.750**	**120.65**	**1.811**	**46.01**	**1.357**	**34.48**	**5.64**	**25.10**	**1.92**	**0.34**	**C0353-035-4750-S**	**2.068**	**52.54**	**4.48**	**19.91**	**1.67**	**0.29**
C0353-035-5000-M	**0.353**	**8.97**	**0.035**	**0.89**	**5.000**	**127.00**	**1.904**	**48.37**	**1.426**	**36.22**	**5.64**	**25.10**	**1.82**	**0.32**	**C0353-035-5000-S**	**2.175**	**55.25**	**4.48**	**19.91**	**1.59**	**0.28**
C0353-035-5250-M	**0.353**	**8.97**	**0.035**	**0.89**	**5.250**	**133.35**	**1.997**	**50.73**	**1.495**	**37.96**	**5.64**	**25.10**	**1.74**	**0.30**	**C0353-035-5250-S**	**2.282**	**57.96**	**4.48**	**19.91**	**1.51**	**0.26**
C0353-035-5500-M	**0.353**	**8.97**	**0.035**	**0.89**	**5.500**	**139.70**	**2.090**	**53.10**	**1.563**	**39.71**	**5.64**	**25.10**	**1.66**	**0.29**	**C0353-035-5500-S**	**2.389**	**60.67**	**4.48**	**19.91**	**1.44**	**0.25**
C0353-035-5750-M	**0.353**	**8.97**	**0.035**	**0.89**	**5.750**	**146.05**	**2.183**	**55.46**	**1.632**	**41.45**	**5.64**	**25.10**	**1.58**	**0.28**	**C0353-035-5750-S**	**2.496**	**63.39**	**4.48**	**19.91**	**1.38**	**0.24**
C0353-035-6000-M	**0.353**	**8.97**	**0.035**	**0.89**	**6.000**	**152.40**	**2.276**	**57.82**	**1.700**	**43.19**	**5.64**	**25.10**	**1.52**	**0.27**	**C0353-035-6000-S**	**2.602**	**66.10**	**4.48**	**19.91**	**1.32**	**0.23**
C0353-035-6250-M	**0.353**	**8.97**	**0.035**	**0.89**	**6.250**	**158.75**	**2.370**	**60.19**	**1.769**	**44.93**	**5.64**	**25.10**	**1.45**	**0.25**	**C0353-035-6250-S**	**2.709**	**68.81**	**4.48**	**19.91**	**1.26**	**0.22**
C0353-038-0625-M	**0.353**	**8.97**	**0.038**	**0.97**	**0.625**	**15.88**	**0.300**	**7.63**	**0.255**	**6.48**	**7.09**	**31.55**	**21.84**	**3.82**	**C0353-038-0625-S**	**0.328**	**8.34**	**5.64**	**25.07**	**18.99**	**3.32**
C0353-038-0688-M	**0.353**	**8.97**	**0.038**	**0.97**	**0.688**	**17.46**	**0.326**	**8.27**	**0.275**	**6.98**	**7.09**	**31.55**	**19.61**	**3.43**	**C0353-038-0688-S**	**0.357**	**9.07**	**5.64**	**25.07**	**17.05**	**2.98**
C0353-038-0750-M	**0.353**	**8.97**	**0.038**	**0.97**	**0.750**	**19.05**	**0.351**	**8.92**	**0.295**	**7.49**	**7.09**	**31.55**	**17.79**	**3.11**	**C0353-038-0750-S**	**0.386**	**9.80**	**5.64**	**25.07**	**15.47**	**2.71**
C0353-038-0813-M	**0.353**	**8.97**	**0.038**	**0.97**	**0.813**	**20.64**	**0.377**	**9.57**	**0.315**	**8.00**	**7.09**	**31.55**	**16.28**	**2.85**	**C0353-038-0813-S**	**0.414**	**10.52**	**5.64**	**25.07**	**14.15**	**2.48**
C0353-038-0875-M	**0.353**	**8.97**	**0.038**	**0.97**	**0.875**	**22.23**	**0.402**	**10.22**	**0.335**	**8.50**	**7.09**	**31.55**	**15.00**	**2.63**	**C0353-038-0875-S**	**0.443**	**11.25**	**5.64**	**25.07**	**13.05**	**2.28**
C0353-038-0938-M	**0.353**	**8.97**	**0.038**	**0.97**	**0.938**	**23.81**	**0.428**	**10.87**	**0.355**	**9.01**	**7.09**	**31.55**	**13.92**	**2.44**	**C0353-038-0938-S**	**0.472**	**11.98**	**5.64**	**25.07**	**12.10**	**2.12**
C0353-038-1000-M	**0.353**	**8.97**	**0.038**	**0.97**	**1.000**	**25.40**	**0.453**	**11.51**	**0.375**	**9.52**	**7.09**	**31.55**	**12.97**	**2.27**	**C0353-038-1000-S**	**0.500**	**12.71**	**5.64**	**25.07**	**11.28**	**1.97**
C0353-038-1125-M	**0.353**	**8.97**	**0.038**	**0.97**	**1.125**	**28.58**	**0.504**	**12.81**	**0.415**	**10.53**	**7.09**	**31.55**	**11.43**	**2.00**	**C0353-038-1125-S**	**0.558**	**14.17**	**5.64**	**25.07**	**9.94**	**1.74**
C0353-038-1250-M	**0.353**	**8.97**	**0.038**	**0.97**	**1.250**	**31.75**	**0.555**	**14.11**	**0.455**	**11.54**	**7.09**	**31.55**	**10.21**	**1.79**	**C0353-038-1250-S**	**0.615**	**15.63**	**5.64**	**25.07**	**8.88**	**1.55**
C0353-038-1375-M	**0.353**	**8.97**	**0.038**	**0.97**	**1.375**	**34.93**	**0.606**	**15.40**	**0.494**	**12.56**	**7.09**	**31.55**	**9.23**	**1.62**	**C0353-038-1375-S**	**0.673**	**17.09**	**5.64**	**25.07**	**8.03**	**1.40**
C0353-038-1500-M	**0.353**	**8.97**	**0.038**	**0.97**	**1.500**	**38.10**	**0.658**	**16.70**	**0.534**	**13.57**	**7.09**	**31.55**	**8.42**	**1.47**	**C0353-038-1500-S**	**0.730**	**18.55**	**5.64**	**25.07**	**7.32**	**1.28**
C0353-038-1625-M	**0.353**	**8.97**	**0.038**	**0.97**	**1.625**	**41.28**	**0.709**	**18.00**	**0.574**	**14.58**	**7.09**	**31.55**	**7.74**	**1.35**	**C0353-038-1625-S**	**0.788**	**20.01**	**5.64**	**25.07**	**6.73**	**1.18**
C0353-038-1750-M	**0.353**	**8.97**	**0.038**	**0.97**	**1.750**	**44.45**	**0.760**	**19.29**	**0.614**	**15.60**	**7.09**	**31.55**	**7.16**	**1.25**	**C0353-038-1750-S**	**0.845**	**21.46**	**5.64**	**25.07**	**6.23**	**1.09**
C0353-038-1875-M	**0.353**	**8.97**	**0.038**	**0.97**	**1.875**	**47.63**	**0.811**	**20.59**	**0.654**	**16.61**	**7.09**	**31.55**	**6.66**	**1.17**	**C0353-038-1875-S**	**0.902**	**22.92**	**5.64**	**25.07**	**5.80**	**1.01**
C0353-038-2000-M	**0.353**	**8.97**	**0.038**	**0.97**	**2.000**	**50.80**	**0.862**	**21.89**	**0.694**	**17.62**	**7.09**	**31.55**	**6.23**	**1.09**	**C0353-038-2000-S**	**0.960**	**24.38**	**5.64**	**25.07**	**5.42**	**0.95**
C0353-038-2125-M	**0.353**	**8.97**	**0.038**	**0.97**	**2.125**	**53.98**	**0.913**	**23.18**	**0.734**	**18.64**	**7.09**	**31.55**	**5.85**	**1.02**	**C0353-038-2125-S**	**1.017**	**25.84**	**5.64**	**25.07**	**5.09**	**0.89**
C0353-038-2250-M	**0.353**	**8.97**	**0.038**	**0.97**	**2.250**	**57.15**	**0.964**	**24.48**	**0.774**	**19.65**	**7.09**	**31.55**	**5.51**	**0.96**	**C0353-038-2250-S**	**1.075**	**27.30**	**5.64**	**25.07**	**4.80**	**0.84**
C0353-038-2375-M	**0.353**	**8.97**	**0.038**	**0.97**	**2.375**	**60.33**	**1.015**	**25.78**	**0.814**	**20.66**	**7.09**	**31.55**	**5.22**	**0.91**	**C0353-038-2375-S**	**1.132**	**28.76**	**5.64**	**25.07**	**4.53**	**0.79**

Part Numbers with an "*" are squared and not ground. **Part Numbers in bold** represent the newly expanded Associated Spring RAYMOND compression spring offering.

MUSIC WIRE															STAINLESS STEEL						
Catalog #	Outside Diameter (OD)		Wire Diameter (d)		Free Length (L) Approx		Load Length (L_1)		Solid Height (Sh) Approx		Load (P) at L_1		Spring Rate (R)		Catalog #	Load Length (L_1)		Load (P) at L_1		Spring Rate (R)	
	in	mm	in	mm	in	mm	in	mm	in	mm	lb	N	lb/in	N/mm		in	mm	lb	N	lb/in	N/mm
C0353-038-2500-M	**0.353**	**8.97**	**0.038**	**0.97**	**2.500**	**63.50**	**1.066**	**27.07**	**0.853**	**21.68**	**7.09**	**31.55**	**4.95**	**0.87**	**C0353-038-2500-S**	**1.190**	**30.22**	**5.64**	**25.07**	**4.30**	**0.75**
C0353-038-2625-M	**0.353**	**8.97**	**0.038**	**0.97**	**2.625**	**66.68**	**1.117**	**28.37**	**0.893**	**22.69**	**7.09**	**31.55**	**4.70**	**0.82**	**C0353-038-2625-S**	**1.247**	**31.67**	**5.64**	**25.07**	**4.09**	**0.72**
C0353-038-2750-M	**0.353**	**8.97**	**0.038**	**0.97**	**2.750**	**69.85**	**1.168**	**29.67**	**0.933**	**23.70**	**7.09**	**31.55**	**4.48**	**0.78**	**C0353-038-2750-S**	**1.304**	**33.13**	**5.64**	**25.07**	**3.90**	**0.68**
C0353-038-2875-M	**0.353**	**8.97**	**0.038**	**0.97**	**2.875**	**73.03**	**1.219**	**30.96**	**0.973**	**24.72**	**7.09**	**31.55**	**4.28**	**0.75**	**C0353-038-2875-S**	**1.362**	**34.59**	**5.64**	**25.07**	**3.72**	**0.65**
C0353-038-3000-M	**0.353**	**8.97**	**0.038**	**0.97**	**3.000**	**76.20**	**1.270**	**32.26**	**1.013**	**25.73**	**7.09**	**31.55**	**4.10**	**0.72**	**C0353-038-3000-S**	**1.419**	**36.05**	**5.64**	**25.07**	**3.57**	**0.62**
C0353-038-3250-M	**0.353**	**8.97**	**0.038**	**0.97**	**3.250**	**82.55**	**1.372**	**34.85**	**1.093**	**27.76**	**7.09**	**31.55**	**3.78**	**0.66**	**C0353-038-3250-S**	**1.534**	**38.97**	**5.64**	**25.07**	**3.28**	**0.57**
C0353-038-3500-M	**0.353**	**8.97**	**0.038**	**0.97**	**3.500**	**88.90**	**1.474**	**37.45**	**1.173**	**29.79**	**7.09**	**31.55**	**3.50**	**0.61**	**C0353-038-3500-S**	**1.649**	**41.88**	**5.64**	**25.07**	**3.05**	**0.53**
C0353-038-3750-M	**0.353**	**8.97**	**0.038**	**0.97**	**3.750**	**95.25**	**1.576**	**40.04**	**1.252**	**31.81**	**7.09**	**31.55**	**3.26**	**0.57**	**C0353-038-3750-S**	**1.764**	**44.80**	**5.64**	**25.07**	**2.84**	**0.50**
C0353-038-4000-M	**0.353**	**8.97**	**0.038**	**0.97**	**4.000**	**101.60**	**1.678**	**42.63**	**1.332**	**33.84**	**7.09**	**31.55**	**3.06**	**0.53**	**C0353-038-4000-S**	**1.879**	**47.72**	**5.64**	**25.07**	**2.66**	**0.46**
C0353-038-4250-M	**0.353**	**8.97**	**0.038**	**0.97**	**4.250**	**107.95**	**1.781**	**45.23**	**1.412**	**35.87**	**7.09**	**31.55**	**2.87**	**0.50**	**C0353-038-4250-S**	**1.994**	**50.64**	**5.64**	**25.07**	**2.50**	**0.44**
C0353-038-4500-M	**0.353**	**8.97**	**0.038**	**0.97**	**4.500**	**114.30**	**1.883**	**47.82**	**1.492**	**37.89**	**7.09**	**31.55**	**2.71**	**0.47**	**C0353-038-4500-S**	**2.108**	**53.55**	**5.64**	**25.07**	**2.36**	**0.41**
C0353-038-4750-M	**0.353**	**8.97**	**0.038**	**0.97**	**4.750**	**120.65**	**1.985**	**50.41**	**1.572**	**39.92**	**7.09**	**31.55**	**2.57**	**0.45**	**C0353-038-4750-S**	**2.223**	**56.47**	**5.64**	**25.07**	**2.23**	**0.39**
C0353-038-5000-M	**0.353**	**8.97**	**0.038**	**0.97**	**5.000**	**127.00**	**2.087**	**53.01**	**1.651**	**41.95**	**7.09**	**31.55**	**2.44**	**0.43**	**C0353-038-5000-S**	**2.338**	**59.39**	**5.64**	**25.07**	**2.12**	**0.37**
C0353-038-5250-M	**0.353**	**8.97**	**0.038**	**0.97**	**5.250**	**133.35**	**2.189**	**55.60**	**1.731**	**43.97**	**7.09**	**31.55**	**2.32**	**0.41**	**C0353-038-5250-S**	**2.453**	**62.30**	**5.64**	**25.07**	**2.02**	**0.35**
C0353-038-5500-M	**0.353**	**8.97**	**0.038**	**0.97**	**5.500**	**139.70**	**2.291**	**58.19**	**1.811**	**46.00**	**7.09**	**31.55**	**2.21**	**0.39**	**C0353-038-5500-S**	**2.568**	**65.22**	**5.64**	**25.07**	**1.92**	**0.34**
C0353-038-5750-M	**0.353**	**8.97**	**0.038**	**0.97**	**5.750**	**146.05**	**2.393**	**60.79**	**1.891**	**48.03**	**7.09**	**31.55**	**2.11**	**0.37**	**C0353-038-5750-S**	**2.683**	**68.14**	**5.64**	**25.07**	**1.84**	**0.32**
C0353-038-6000-M	**0.353**	**8.97**	**0.038**	**0.97**	**6.000**	**152.40**	**2.495**	**63.38**	**1.971**	**50.05**	**7.09**	**31.55**	**2.02**	**0.35**	**C0353-038-6000-S**	**2.797**	**71.06**	**5.64**	**25.07**	**1.76**	**0.31**
C0353-038-6250-M	**0.353**	**8.97**	**0.038**	**0.97**	**6.250**	**158.75**	**2.597**	**65.97**	**2.050**	**52.08**	**7.09**	**31.55**	**1.94**	**0.34**	**C0353-038-6250-S**	**2.912**	**73.97**	**5.64**	**25.07**	**1.69**	**0.30**
C0353-040-0563-M	**0.353**	**8.97**	**0.040**	**1.02**	**0.563**	**14.29**	**0.289**	**7.34**	**0.253**	**6.42**	**8.18**	**36.37**	**29.89**	**5.23**	**C0353-040-0563-S**	**0.312**	**7.93**	**6.50**	**28.92**	**25.99**	**4.55**
C0353-040-0625-M	**0.353**	**8.97**	**0.040**	**1.02**	**0.625**	**15.88**	**0.316**	**8.03**	**0.274**	**6.97**	**8.18**	**36.37**	**26.46**	**4.63**	**C0353-040-0625-S**	**0.342**	**8.70**	**6.50**	**28.92**	**23.01**	**4.03**
C0353-040-0688-M	**0.353**	**8.97**	**0.040**	**1.02**	**0.688**	**17.46**	**0.343**	**8.71**	**0.296**	**7.53**	**8.18**	**36.37**	**23.74**	**4.15**	**C0353-040-0688-S**	**0.373**	**9.46**	**6.50**	**28.92**	**20.64**	**3.61**
C0353-040-0750-M	**0.353**	**8.97**	**0.040**	**1.02**	**0.750**	**19.05**	**0.370**	**9.40**	**0.318**	**8.08**	**8.18**	**36.37**	**21.52**	**3.77**	**C0353-040-0750-S**	**0.403**	**10.23**	**6.50**	**28.92**	**18.72**	**3.28**
C0353-040-0813-M	**0.353**	**8.97**	**0.040**	**1.02**	**0.813**	**20.64**	**0.397**	**10.09**	**0.340**	**8.64**	**8.18**	**36.37**	**19.69**	**3.45**	**C0353-040-0813-S**	**0.433**	**10.99**	**6.50**	**28.92**	**17.12**	**3.00**
C0353-040-0875-M	**0.353**	**8.97**	**0.040**	**1.02**	**0.875**	**22.23**	**0.424**	**10.77**	**0.362**	**9.19**	**8.18**	**36.37**	**18.14**	**3.17**	**C0353-040-0875-S**	**0.463**	**11.76**	**6.50**	**28.92**	**15.77**	**2.76**
C0353-040-0938-M	**0.353**	**8.97**	**0.040**	**1.02**	**0.938**	**23.81**	**0.451**	**11.46**	**0.384**	**9.75**	**8.18**	**36.37**	**16.82**	**2.94**	**C0353-040-0938-S**	**0.493**	**12.52**	**6.50**	**28.92**	**14.62**	**2.56**
C0353-040-1000-M	**0.353**	**8.97**	**0.040**	**1.02**	**1.000**	**25.40**	**0.478**	**12.15**	**0.406**	**10.30**	**8.18**	**36.37**	**15.68**	**2.74**	**C0353-040-1000-S**	**0.523**	**13.28**	**6.50**	**28.92**	**13.63**	**2.39**
C0353-040-1125-M	**0.353**	**8.97**	**0.040**	**1.02**	**1.125**	**28.58**	**0.532**	**13.52**	**0.449**	**11.41**	**8.18**	**36.37**	**13.80**	**2.42**	**C0353-040-1125-S**	**0.583**	**14.81**	**6.50**	**28.92**	**12.00**	**2.10**
C0353-040-1250-M	**0.353**	**8.97**	**0.040**	**1.02**	**1.250**	**31.75**	**0.587**	**14.90**	**0.493**	**12.52**	**8.18**	**36.37**	**12.33**	**2.16**	**C0353-040-1250-S**	**0.643**	**16.34**	**6.50**	**28.92**	**10.72**	**1.88**
C0353-040-1375-M	**0.353**	**8.97**	**0.040**	**1.02**	**1.375**	**34.93**	**0.641**	**16.27**	**0.537**	**13.63**	**8.18**	**36.37**	**11.14**	**1.95**	**C0353-040-1375-S**	**0.704**	**17.87**	**6.50**	**28.92**	**9.68**	**1.69**
C0353-040-1500-M	**0.353**	**8.97**	**0.040**	**1.02**	**1.500**	**38.10**	**0.695**	**17.65**	**0.580**	**14.74**	**8.18**	**36.37**	**10.16**	**1.78**	**C0353-040-1500-S**	**0.764**	**19.40**	**6.50**	**28.92**	**8.83**	**1.55**
C0353-040-1625-M	**0.353**	**8.97**	**0.040**	**1.02**	**1.625**	**41.28**	**0.749**	**19.02**	**0.624**	**15.85**	**8.18**	**36.37**	**9.33**	**1.63**	**C0353-040-1625-S**	**0.824**	**20.93**	**6.50**	**28.92**	**8.12**	**1.42**
C0353-040-1750-M	**0.353**	**8.97**	**0.040**	**1.02**	**1.750**	**44.45**	**0.803**	**20.40**	**0.668**	**16.96**	**8.18**	**36.37**	**8.64**	**1.51**	**C0353-040-1750-S**	**0.884**	**22.46**	**6.50**	**28.92**	**7.51**	**1.31**
C0353-040-1875-M	**0.353**	**8.97**	**0.040**	**1.02**	**1.875**	**47.63**	**0.857**	**21.77**	**0.711**	**18.07**	**8.18**	**36.37**	**8.03**	**1.41**	**C0353-040-1875-S**	**0.944**	**23.99**	**6.50**	**28.92**	**6.99**	**1.22**
C0353-040-2000-M	**0.353**	**8.97**	**0.040**	**1.02**	**2.000**	**50.80**	**0.911**	**23.15**	**0.755**	**19.18**	**8.18**	**36.37**	**7.51**	**1.31**	**C0353-040-2000-S**	**1.005**	**25.51**	**6.50**	**28.92**	**6.53**	**1.14**
C0353-040-2125-M	**0.353**	**8.97**	**0.040**	**1.02**	**2.125**	**53.98**	**0.965**	**24.52**	**0.799**	**20.29**	**8.18**	**36.37**	**7.05**	**1.23**	**C0353-040-2125-S**	**1.065**	**27.04**	**6.50**	**28.92**	**6.13**	**1.07**
C0353-040-2250-M	**0.353**	**8.97**	**0.040**	**1.02**	**2.250**	**57.15**	**1.019**	**25.90**	**0.842**	**21.40**	**8.18**	**36.37**	**6.65**	**1.16**	**C0353-040-2250-S**	**1.125**	**28.57**	**6.50**	**28.92**	**5.78**	**1.01**
C0353-040-2375-M	**0.353**	**8.97**	**0.040**	**1.02**	**2.375**	**60.33**	**1.074**	**27.27**	**0.886**	**22.51**	**8.18**	**36.37**	**6.28**	**1.10**	**C0353-040-2375-S**	**1.185**	**30.10**	**6.50**	**28.92**	**5.46**	**0.96**
C0353-040-2500-M	**0.353**	**8.97**	**0.040**	**1.02**	**2.500**	**63.50**	**1.128**	**28.64**	**0.930**	**23.62**	**8.18**	**36.37**	**5.96**	**1.04**	**C0353-040-2500-S**	**1.245**	**31.63**	**6.50**	**28.92**	**5.18**	**0.91**
C0353-040-2625-M	**0.353**	**8.97**	**0.040**	**1.02**	**2.625**	**66.68**	**1.182**	**30.02**	**0.974**	**24.73**	**8.18**	**36.37**	**5.67**	**0.99**	**C0353-040-2625-S**	**1.305**	**33.16**	**6.50**	**28.92**	**4.93**	**0.86**
C0353-040-2750-M	**0.353**	**8.97**	**0.040**	**1.02**	**2.750**	**69.85**	**1.236**	**31.39**	**1.017**	**25.84**	**8.18**	**36.37**	**5.40**	**0.95**	**C0353-040-2750-S**	**1.366**	**34.69**	**6.50**	**28.92**	**4.70**	**0.82**
C0353-040-2875-M	**0.353**	**8.97**	**0.040**	**1.02**	**2.875**	**73.03**	**1.290**	**32.77**	**1.061**	**26.95**	**8.18**	**36.37**	**5.16**	**0.90**	**C0353-040-2875-S**	**1.426**	**36.22**	**6.50**	**28.92**	**4.49**	**0.79**
C0353-040-3000-M	**0.353**	**8.97**	**0.040**	**1.02**	**3.000**	**76.20**	**1.344**	**34.14**	**1.105**	**28.06**	**8.18**	**36.37**	**4.94**	**0.86**	**C0353-040-3000-S**	**1.486**	**37.74**	**6.50**	**28.92**	**4.29**	**0.75**
C0353-040-3250-M	**0.353**	**8.97**	**0.040**	**1.02**	**3.250**	**82.55**	**1.452**	**36.89**	**1.192**	**30.28**	**8.18**	**36.37**	**4.55**	**0.80**	**C0353-040-3250-S**	**1.606**	**40.80**	**6.50**	**28.92**	**3.96**	**0.69**
C0353-040-3500-M	**0.353**	**8.97**	**0.040**	**1.02**	**3.500**	**88.90**	**1.561**	**39.64**	**1.279**	**32.50**	**8.18**	**36.37**	**4.22**	**0.74**	**C0353-040-3500-S**	**1.727**	**43.86**	**6.50**	**28.92**	**3.67**	**0.64**
C0353-040-3750-M	**0.353**	**8.97**	**0.040**	**1.02**	**3.750**	**95.25**	**1.669**	**42.39**	**1.367**	**34.72**	**8.18**	**36.37**	**3.93**	**0.69**	**C0353-040-3750-S**	**1.847**	**46.92**	**6.50**	**28.92**	**3.42**	**0.60**
C0353-040-4000-M	**0.353**	**8.97**	**0.040**	**1.02**	**4.000**	**101.60**	**1.777**	**45.14**	**1.454**	**36.94**	**8.18**	**36.37**	**3.68**	**0.64**	**C0353-040-4000-S**	**1.968**	**49.98**	**6.50**	**28.92**	**3.20**	**0.56**
C0353-040-4250-M	**0.353**	**8.97**	**0.040**	**1.02**	**4.250**	**107.95**	**1.885**	**47.89**	**1.542**	**39.15**	**8.18**	**36.37**	**3.46**	**0.61**	**C0353-040-4250-S**	**2.088**	**53.03**	**6.50**	**28.92**	**3.01**	**0.53**
C0353-040-4500-M	**0.353**	**8.97**	**0.040**	**1.02**	**4.500**	**114.30**	**1.994**	**50.64**	**1.629**	**41.37**	**8.18**	**36.37**	**3.26**	**0.57**	**C0353-040-4500-S**	**2.208**	**56.09**	**6.50**	**28.92**	**2.84**	**0.50**
C0353-040-4750-M	**0.353**	**8.97**	**0.040**	**1.02**	**4.750**	**120.65**	**2.102**	**53.39**	**1.716**	**43.59**	**8.18**	**36.37**	**3.09**	**0.54**	**C0353-040-4750-S**	**2.329**	**59.15**	**6.50**	**28.92**	**2.69**	**0.47**
C0353-040-5000-M	**0.353**	**8.97**	**0.040**	**1.02**	**5.000**	**127.00**	**2.210**	**56.14**	**1.804**	**45.81**	**8.18**	**36.37**	**2.93**	**0.51**	**C0353-040-5000-S**	**2.449**	**62.21**	**6.50**	**28.92**	**2.55**	**0.45**
C0353-040-5250-M	**0.353**	**8.97**	**0.040**	**1.02**	**5.250**	**133.35**	**2.318**	**58.89**	**1.891**	**48.03**	**8.18**	**36.37**	**2.79**	**0.49**	**C0353-040-5250-S**	**2.569**	**65.26**	**6.50**	**28.92**	**2.43**	**0.42**
C0353-040-5500-M	**0.353**	**8.97**	**0.040**	**1.02**	**5.500**	**139.70**	**2.427**	**61.64**	**1.978**	**50.25**	**8.18**	**36.37**	**2.66**	**0.47**	**C0353-040-5500-S**	**2.690**	**68.32**	**6.50**	**28.92**	**2.31**	**0.40**
C0353-040-5750-M	**0.353**	**8.97**	**0.040**	**1.02**	**5.750**	**146.05**	**2.535**	**64.38**	**2.066**	**52.47**	**8.18**	**36.37**	**2.54**	**0.45**	**C0353-040-5750-S**	**2.810**	**71.38**	**6.50**	**28.92**	**2.21**	**0.39**
C0353-040-6000-M	**0.353**	**8.97**	**0.040**	**1.02**	**6.000**	**152.40**	**2.643**	**67.13**	**2.153**	**54.69**	**8.18**	**36.37**	**2.44**	**0.43**	**C0353-040-6000-S**	**2.931**	**74.44**	**6.50**	**28.92**	**2.12**	**0.37**
C0353-040-6250-M	**0.353**	**8.97**	**0.040**	**1.02**	**6.250**	**158.75**	**2.751**	**69.88**	**2.241**	**56.91**	**8.18**	**36.37**	**2.34**	**0.41**	**C0353-040-6250-S**	**3.051**	**77.49**	**6.50**	**28.92**	**2.03**	**0.36**
C0353-042-0563-M	**0.353**	**8.97**	**0.042**	**1.07**	**0.563**	**14.29**	**0.303**	**7.70**	**0.270**	**6.86**	**9.36**	**41.63**	**36.07**	**6.31**	**C0353-042-0563-S**	**0.325**	**8.26**	**7.45**	**33.12**	**31.36**	**5.49**
C0353-042-0625-M	**0.353**	**8.97**	**0.042**	**1.07**	**0.625**	**15.88**	**0.332**	**8.42**	**0.294**	**7.46**	**9.36**	**41.63**	**31.90**	**5.58**	**C0353-042-0625-S**	**0.357**	**9.06**	**7.45**	**33.12**	**27.74**	**4.85**
C0353-042-0688-M	**0.353**	**8.97**	**0.042**	**1.07**	**0.688**	**17.46**	**0.360**	**9.15**	**0.318**	**8.07**	**9.36**	**41.63**	**28.60**	**5.00**	**C0353-042-0688-S**	**0.388**	**9.86**	**7.45**	**33.12**	**24.87**	**4.35**
C0353-042-0750-M	**0.353**	**8.97**	**0.042**	**1.07**	**0.750**	**19.05**	**0.389**	**9.88**	**0.341**	**8.67**	**9.36**	**41.63**	**25.91**	**4.53**	**C0353-042-0750-S**	**0.420**	**10.66**	**7.45**	**33.12**	**22.53**	**3.94**
C0353-042-0813-M	**0.353**	**8.97**	**0.042**	**1.07**	**0.813**	**20.64**	**0.417**	**10.60**	**0.365**	**9.27**	**9.36**	**41.63**	**23.69**	**4.15**	**C0353-042-0813-S**	**0.451**	**11.46**	**7.45**	**33.12**	**20.60**	**3.60**
C0353-042-0875-M	**0.353**	**8.97**	**0.042**	**1.07**	**0.875**	**22.23**	**0.446**	**11.33**	**0.389**	**9.88**	**9.36**	**41.63**	**21.82**	**3.82**	**C0353-042-0875-S**	**0.483**	**12.26**	**7.45**	**33.12**	**18.97**	**3.32**
C0353-042-0938-M	**0.353**	**8.97**	**0.042**	**1.07**	**0.938**	**23.81**	**0.475**	**12.05**	**0.413**	**10.48**	**9.36**	**41.63**	**20.22**	**3.54**	**C0353-042-0938-S**	**0.514**	**13.06**	**7.45**	**33.12**	**17.58**	**3.08**
C0353-042-1000-M	**0.353**	**8.97**	**0.042**	**1.07**	**1.000**	**25.40**	**0.503**	**12.78**	**0.436**	**11.08**	**9.36**	**41.63**	**18.84**	**3.30**	**C0353-042-1000-S**	**0.546**	**13.86**	**7.45**	**33.12**	**16.38**	**2.87**
C0353-042-1125-M	**0.353**	**8.97**	**0.042**	**1.07**	**1.125**	**28.58**	**0.560**	**14.23**	**0.484**	**12.29**	**9.36**	**41.63**	**16.58**	**2.90**	**C0353-042-1125-S**	**0.609**	**15.46**	**7.45**	**33.12**	**14.42**	**2.52**

FOR INFORMATION ON ALTERNATIVE FINISHES, SEE PAGE 311

Part Numbers with an "*" are squared and not ground. **Part Numbers in bold** represent the newly expanded Associated Spring RAYMOND compression spring offering.

(OD) 0.353 - 0.353

MUSIC WIRE															STAINLESS STEEL						
Catalog #	Outside Diameter (OD)		Wire Diameter (d)		Free Length (L) Approx		Load Length (L_1)		Solid Height (Sh) Approx		Load (P) at L_1		Spring Rate (R)		Catalog #	Load Length (L_1)		Load (P) at L_1		Spring Rate (R)	
	in	mm	in	mm	in	mm	in	mm	in	mm	lb	N	lb/in	N/mm		in	mm	lb	N	lb/in	N/mm
C0353-042-1250-M	0.353	8.97	0.042	1.07	1.250	31.75	0.618	15.69	0.531	13.49	9.36	41.63	14.80	2.59	**C0353-042-1250-S**	0.671	17.06	7.45	33.12	12.87	2.25
C0353-042-1375-M	0.353	8.97	0.042	1.07	1.375	34.93	0.675	17.14	0.579	14.70	9.36	41.63	13.37	2.34	**C0353-042-1375-S**	0.734	18.66	7.45	33.12	11.62	2.03
C0353-042-1500-M	0.353	8.97	0.042	1.07	1.500	38.10	0.732	18.59	0.626	15.91	9.36	41.63	12.19	2.13	**C0353-042-1500-S**	0.797	20.26	7.45	33.12	10.60	1.85
C0353-042-1625-M	0.353	8.97	0.042	1.07	1.625	41.28	0.789	20.05	0.674	17.11	9.36	41.63	11.20	1.96	**C0353-042-1625-S**	0.860	21.85	7.45	33.12	9.74	1.70
C0353-042-1750-M	0.353	8.97	0.042	1.07	1.750	44.45	0.846	21.50	0.721	18.32	9.36	41.63	10.36	1.81	**C0353-042-1750-S**	0.923	23.45	7.45	33.12	9.01	1.58
C0353-042-1875-M	0.353	8.97	0.042	1.07	1.875	47.63	0.904	22.95	0.769	19.53	9.36	41.63	9.64	1.69	**C0353-042-1875-S**	0.986	25.05	7.45	33.12	8.38	1.47
C0353-042-2000-M	0.353	8.97	0.042	1.07	2.000	50.80	0.961	24.40	0.816	20.73	9.36	41.63	9.01	1.58	**C0353-042-2000-S**	1.049	26.65	7.45	33.12	7.83	1.37
C0353-042-2125-M	0.353	8.97	0.042	1.07	2.125	53.98	1.018	25.86	0.864	21.94	9.36	41.63	8.46	1.48	**C0353-042-2125-S**	1.112	28.25	7.45	33.12	7.35	1.29
C0353-042-2250-M	0.353	8.97	0.042	1.07	2.250	57.15	1.075	27.31	0.911	23.15	9.36	41.63	7.97	1.39	**C0353-042-2250-S**	1.175	29.85	7.45	33.12	6.93	1.21
C0353-042-2375-M	0.353	8.97	0.042	1.07	2.375	60.33	1.132	28.76	0.959	24.35	9.36	41.63	7.53	1.32	**C0353-042-2375-S**	1.238	31.45	7.45	33.12	6.55	1.15
C0353-042-2500-M	0.353	8.97	0.042	1.07	2.500	63.50	1.190	30.22	1.006	25.56	9.36	41.63	7.14	1.25	**C0353-042-2500-S**	1.301	33.05	7.45	33.12	6.21	1.09
C0353-042-2625-M	0.353	8.97	0.042	1.07	2.625	66.68	1.247	31.67	1.054	26.77	9.36	41.63	6.79	1.19	**C0353-042-2625-S**	1.364	34.65	7.45	33.12	5.91	1.03
C0353-042-2750-M	0.353	8.97	0.042	1.07	2.750	69.85	1.304	33.12	1.101	27.97	9.36	41.63	6.47	1.13	**C0353-042-2750-S**	1.427	36.25	7.45	33.12	5.63	0.99
C0353-042-2875-M	0.353	8.97	0.042	1.07	2.875	73.03	1.361	34.58	1.149	29.18	9.36	41.63	6.18	1.08	**C0353-042-2875-S**	1.490	37.85	7.45	33.12	5.38	0.94
C0353-042-3000-M	0.353	8.97	0.042	1.07	3.000	76.20	1.418	36.03	1.196	30.39	9.36	41.63	5.92	1.04	**C0353-042-3000-S**	1.553	39.45	7.45	33.12	5.15	0.90
C0353-042-3250-M	0.353	8.97	0.042	1.07	3.250	82.55	1.533	38.93	1.291	32.80	9.36	41.63	5.45	0.95	**C0353-042-3250-S**	1.679	42.65	7.45	33.12	4.74	0.83
C0353-042-3500-M	0.353	8.97	0.042	1.07	3.500	88.90	1.647	41.84	1.386	35.21	9.36	41.63	5.05	0.88	**C0353-042-3500-S**	1.805	45.85	7.45	33.12	4.39	0.77
C0353-042-3750-M	0.353	8.97	0.042	1.07	3.750	95.25	1.762	44.75	1.481	37.63	9.36	41.63	4.71	0.82	**C0353-042-3750-S**	1.931	49.05	7.45	33.12	4.09	0.72
C0353-042-4000-M	0.353	8.97	0.042	1.07	4.000	101.60	1.876	47.65	1.576	40.04	9.36	41.63	4.41	0.77	**C0353-042-4000-S**	2.057	52.25	7.45	33.12	3.83	0.67
C0353-042-4250-M	0.353	8.97	0.042	1.07	4.250	107.95	1.990	50.56	1.671	42.45	9.36	41.63	4.14	0.72	**C0353-042-4250-S**	2.183	55.45	7.45	33.12	3.60	0.63
C0353-042-4500-M	0.353	8.97	0.042	1.07	4.500	114.30	2.105	53.46	1.766	44.86	9.36	41.63	3.91	0.68	**C0353-042-4500-S**	2.309	58.65	7.45	33.12	3.40	0.59
C0353-042-4750-M	0.353	8.97	0.042	1.07	4.750	120.65	2.219	56.37	1.861	47.28	9.36	41.63	3.70	0.65	**C0353-042-4750-S**	2.435	61.85	7.45	33.12	3.22	0.56
C0353-042-5000-M	0.353	8.97	0.042	1.07	5.000	127.00	2.334	59.28	1.956	49.69	9.36	41.63	3.51	0.61	**C0353-042-5000-S**	2.561	65.05	7.45	33.12	3.05	0.53
C0353-042-5250-M	0.353	8.97	0.042	1.07	5.250	133.35	2.448	62.18	2.051	52.10	9.36	41.63	3.34	0.58	**C0353-042-5250-S**	2.687	68.25	7.45	33.12	2.91	0.51
C0353-042-5500-M	0.353	8.97	0.042	1.07	5.500	139.70	2.563	65.09	2.146	54.52	9.36	41.63	3.19	0.56	**C0353-042-5500-S**	2.813	71.45	7.45	33.12	2.77	0.48
C0353-042-5750-M	0.353	8.97	0.042	1.07	5.750	146.05	2.677	67.99	2.241	56.93	9.36	41.63	3.05	0.53	**C0353-042-5750-S**	2.939	74.65	7.45	33.12	2.65	0.46
C0353-042-6000-M	0.353	8.97	0.042	1.07	6.000	152.40	2.791	70.90	2.336	59.34	9.36	41.63	2.92	0.51	**C0353-042-6000-S**	3.065	77.84	7.45	33.12	2.54	0.44
C0353-045-0563-M	0.353	8.97	0.045	1.14	0.563	14.29	0.324	8.22	0.296	7.51	11.32	50.37	47.41	8.30	**C0353-045-0563-S**	0.344	8.74	9.01	40.08	41.22	7.21
C0353-045-0625-M	0.353	8.97	0.045	1.14	0.625	15.88	0.355	9.01	0.322	8.18	11.32	50.37	41.87	7.33	**C0353-045-0625-S**	0.378	9.59	9.01	40.08	36.41	6.37
C0353-045-0688-M	0.353	8.97	0.045	1.14	0.688	17.46	0.385	9.79	0.349	8.86	11.32	50.37	37.49	6.56	**C0353-045-0688-S**	0.411	10.44	9.01	40.08	32.60	5.71
C0353-045-0750-M	0.353	8.97	0.045	1.14	0.750	19.05	0.416	10.58	0.375	9.53	11.32	50.37	33.94	5.94	**C0353-045-0750-S**	0.445	11.29	9.01	40.08	29.51	5.16
C0353-045-0813-M	0.353	8.97	0.045	1.14	0.813	20.64	0.447	11.36	0.402	10.21	11.32	50.37	31.00	5.43	**C0353-045-0813-S**	0.478	12.15	9.01	40.08	26.96	4.72
C0353-045-0875-M	0.353	8.97	0.045	1.14	0.875	22.23	0.478	12.15	0.429	10.89	11.32	50.37	28.54	4.99	**C0353-045-0875-S**	0.512	13.00	9.01	40.08	24.81	4.34
C0353-045-0938-M	0.353	8.97	0.045	1.14	0.938	23.81	0.509	12.93	0.455	11.56	11.32	50.37	26.43	4.63	**C0353-045-0938-S**	0.545	13.85	9.01	40.08	22.98	4.02
C0353-045-1000-M	0.353	8.97	0.045	1.14	1.000	25.40	0.540	13.72	0.482	12.24	11.32	50.37	24.62	4.31	**C0353-045-1000-S**	0.579	14.71	9.01	40.08	21.41	3.75
C0353-045-1125-M	0.353	8.97	0.045	1.14	1.125	28.58	0.602	15.29	0.535	13.59	11.32	50.37	21.64	3.79	**C0353-045-1125-S**	0.646	16.41	9.01	40.08	18.82	3.29
C0353-045-1250-M	0.353	8.97	0.045	1.14	1.250	31.75	0.664	16.86	0.588	14.94	11.32	50.37	19.31	3.38	**C0353-045-1250-S**	0.713	18.12	9.01	40.08	16.79	2.94
C0353-045-1375-M	0.353	8.97	0.045	1.14	1.375	34.93	0.725	18.43	0.641	16.29	11.32	50.37	17.43	3.05	**C0353-045-1375-S**	0.781	19.83	9.01	40.08	15.16	2.65
C0353-045-1500-M	0.353	8.97	0.045	1.14	1.500	38.10	0.787	20.00	0.695	17.64	11.32	50.37	15.89	2.78	**C0353-045-1500-S**	0.848	21.53	9.01	40.08	13.81	2.42
C0353-045-1625-M	0.353	8.97	0.045	1.14	1.625	41.28	0.849	21.57	0.748	18.99	11.32	50.37	14.59	2.55	**C0353-045-1625-S**	0.915	23.24	9.01	40.08	12.69	2.22
C0353-045-1750-M	0.353	8.97	0.045	1.14	1.750	44.45	0.911	23.14	0.801	20.34	11.32	50.37	13.49	2.36	**C0353-045-1750-S**	0.982	24.94	9.01	40.08	11.73	2.05
C0353-045-1875-M	0.353	8.97	0.045	1.14	1.875	47.63	0.973	24.71	0.854	21.69	11.32	50.37	12.55	2.20	**C0353-045-1875-S**	1.049	26.65	9.01	40.08	10.91	1.91
C0353-045-2000-M	0.353	8.97	0.045	1.14	2.000	50.80	1.034	26.28	0.907	23.05	11.32	50.37	11.73	2.05	**C0353-045-2000-S**	1.116	28.36	9.01	40.08	10.20	1.78
C0353-045-2125-M	0.353	8.97	0.045	1.14	2.125	53.98	1.096	27.85	0.961	24.40	11.32	50.37	11.01	1.93	**C0353-045-2125-S**	1.184	30.06	9.01	40.08	9.57	1.68
C0353-045-2250-M	0.353	8.97	0.045	1.14	2.250	57.15	1.158	29.42	1.014	25.75	11.32	50.37	10.37	1.81	**C0353-045-2250-S**	1.251	31.77	9.01	40.08	9.02	1.58
C0353-045-2375-M	0.353	8.97	0.045	1.14	2.375	60.33	1.220	30.99	1.067	27.10	11.32	50.37	9.80	1.72	**C0353-045-2375-S**	1.318	33.48	9.01	40.08	8.52	1.49
C0353-045-2500-M	0.353	8.97	0.045	1.14	2.500	63.50	1.282	32.56	1.120	28.45	11.32	50.37	9.30	1.63	**C0353-045-2500-S**	1.385	35.18	9.01	40.08	8.08	1.41
C0353-045-2625-M	0.353	8.97	0.045	1.14	2.625	66.68	1.344	34.13	1.173	29.80	11.32	50.37	8.84	1.55	**C0353-045-2625-S**	1.452	36.89	9.01	40.08	7.68	1.34
C0353-045-2750-M	0.353	8.97	0.045	1.14	2.750	69.85	1.405	35.70	1.226	31.15	11.32	50.37	8.42	1.47	**C0353-045-2750-S**	1.519	38.59	9.01	40.08	7.32	1.28
C0353-045-2875-M	0.353	8.97	0.045	1.14	2.875	73.03	1.467	37.27	1.280	32.50	11.32	50.37	8.04	1.41	**C0353-045-2875-S**	1.587	40.30	9.01	40.08	6.99	1.22
C0353-045-3000-M	0.353	8.97	0.045	1.14	3.000	76.20	1.529	38.84	1.333	33.86	11.32	50.37	7.70	1.35	**C0353-045-3000-S**	1.654	42.01	9.01	40.08	6.69	1.17
C0353-045-3250-M	0.353	8.97	0.045	1.14	3.250	82.55	1.653	41.98	1.439	36.56	11.32	50.37	7.09	1.24	**C0353-045-3250-S**	1.788	45.42	9.01	40.08	6.16	1.08
C0353-045-3500-M	0.353	8.97	0.045	1.14	3.500	88.90	1.776	45.12	1.546	39.26	11.32	50.37	6.57	1.15	**C0353-045-3500-S**	1.923	48.83	9.01	40.08	5.71	1.00
C0353-045-3750-M	0.353	8.97	0.045	1.14	3.750	95.25	1.900	48.26	1.652	41.96	11.32	50.37	6.12	1.07	**C0353-045-3750-S**	2.057	52.24	9.01	40.08	5.32	0.93
C0353-045-4000-M	0.353	8.97	0.045	1.14	4.000	101.60	2.023	51.40	1.758	44.66	11.32	50.37	5.73	1.00	**C0353-045-4000-S**	2.191	55.66	9.01	40.08	4.98	0.87
C0353-045-4250-M	0.353	8.97	0.045	1.14	4.250	107.95	2.147	54.54	1.865	47.37	11.32	50.37	5.39	0.94	**C0353-045-4250-S**	2.326	59.07	9.01	40.08	4.68	0.82
C0353-045-4500-M	0.353	8.97	0.045	1.14	4.500	114.30	2.271	57.68	1.971	50.07	11.32	50.37	5.08	0.89	**C0353-045-4500-S**	2.460	62.48	9.01	40.08	4.42	0.77
C0353-045-4750-M	0.353	8.97	0.045	1.14	4.750	120.65	2.394	60.82	2.078	52.77	11.32	50.37	4.81	0.84	**C0353-045-4750-S**	2.594	65.89	9.01	40.08	4.18	0.73
C0353-045-5000-M	0.353	8.97	0.045	1.14	5.000	127.00	2.518	63.96	2.184	55.47	11.32	50.37	4.56	0.80	**C0353-045-5000-S**	2.729	69.31	9.01	40.08	3.97	0.69
C0353-045-5250-M	0.353	8.97	0.045	1.14	5.250	133.35	2.642	67.10	2.290	58.18	11.32	50.37	4.34	0.76	**C0353-045-5250-S**	2.863	72.72	9.01	40.08	3.78	0.66
C0353-045-5500-M	0.353	8.97	0.045	1.14	5.500	139.70	2.765	70.24	2.397	60.88	11.32	50.37	4.14	0.72	**C0353-045-5500-S**	2.997	76.13	9.01	40.08	3.60	0.63
C0353-045-5750-M	0.353	8.97	0.045	1.14	5.750	146.05	2.889	73.38	2.503	63.58	11.32	50.37	3.96	0.69	**C0353-045-5750-S**	3.132	79.54	9.01	40.08	3.44	0.60
C0353-045-6000-M	0.353	8.97	0.045	1.14	6.000	152.40	3.012	76.52	2.610	66.28	11.32	50.37	3.79	0.66	**C0353-045-6000-S**	3.266	82.96	9.01	40.08	3.30	0.58
C0353-047-0563-M	0.353	8.97	0.047	1.19	0.563	14.29	0.337	8.56	0.312	7.93	12.76	56.77	56.61	9.91	**C0353-047-0563-S**	0.356	9.05	10.16	45.18	49.23	8.61

Part Numbers with an "*" are squared and not ground. **Part Numbers in bold** represent the newly expanded Associated Spring RAYMOND compression spring offering.

MUSIC WIRE															STAINLESS STEEL						
Catalog #	Outside Diameter (OD)		Wire Diameter (d)		Free Length (L) Approx		Load Length (L_1)		Solid Height (Sh) Approx		Load (P) at L_1		Spring Rate (R)		Catalog #	Load Length (L_1)		Load (P) at L_1		Spring Rate (R)	
	in	mm	in	mm	in	mm	in	mm	in	mm	lb	N	lb/in	N/mm		in	mm	lb	N	lb/in	N/mm
C0353-047-0625-M	0.353	8.97	0.047	1.19	0.625	15.88	0.369	9.38	0.341	8.65	12.76	56.77	49.95	8.74	**C0353-047-0625-S**	0.391	9.93	10.16	45.18	43.43	7.60
C0353-047-0688-M	0.353	8.97	0.047	1.19	0.688	17.46	0.402	10.21	0.369	9.37	12.76	56.77	44.69	7.82	**C0353-047-0688-S**	0.426	10.82	10.16	45.18	38.86	6.80
C0353-047-0750-M	0.353	8.97	0.047	1.19	0.750	19.05	0.434	11.03	0.398	10.10	12.76	56.77	40.43	7.07	**C0353-047-0750-S**	0.461	11.71	10.16	45.18	35.16	6.15
C0353-047-0813-M	0.353	8.97	0.047	1.19	0.813	20.64	0.467	11.86	0.426	10.82	12.76	56.77	36.91	6.46	**C0353-047-0813-S**	0.496	12.60	10.16	45.18	32.10	5.62
C0353-047-0875-M	0.353	8.97	0.047	1.19	0.875	22.23	0.499	12.68	0.454	11.54	12.76	56.77	33.96	5.94	**C0353-047-0875-S**	0.531	13.49	10.16	45.18	29.53	5.17
C0353-047-0938-M	0.353	8.97	0.047	1.19	0.938	23.81	0.532	13.50	0.483	12.27	12.76	56.77	31.44	5.50	**C0353-047-0938-S**	0.566	14.38	10.16	45.18	27.34	4.78
C0353-047-1000-M	0.353	8.97	0.047	1.19	1.000	25.40	0.564	14.33	0.511	12.99	12.76	56.77	29.27	5.12	**C0353-047-1000-S**	0.601	15.26	10.16	45.18	25.46	4.45
C0353-047-1125-M	0.353	8.97	0.047	1.19	1.125	28.58	0.629	15.97	0.568	14.44	12.76	56.77	25.72	4.50	**C0353-047-1125-S**	0.671	17.04	10.16	45.18	22.37	3.91
C0353-047-1250-M	0.353	8.97	0.047	1.19	1.250	31.75	0.694	17.62	0.625	15.88	12.76	56.77	22.94	4.01	**C0353-047-1250-S**	0.741	18.82	10.16	45.18	19.95	3.49
C0353-047-1375-M	0.353	8.97	0.047	1.19	1.375	34.93	0.759	19.27	0.682	17.33	12.76	56.77	20.70	3.62	**C0353-047-1375-S**	0.811	20.59	10.16	45.18	18.00	3.15
C0353-047-1500-M	0.353	8.97	0.047	1.19	1.500	38.10	0.823	20.91	0.739	18.78	12.76	56.77	18.86	3.30	**C0353-047-1500-S**	0.881	22.37	10.16	45.18	16.40	2.87
C0353-047-1625-M	0.353	8.97	0.047	1.19	1.625	41.28	0.888	22.56	0.796	20.22	12.76	56.77	17.32	3.03	**C0353-047-1625-S**	0.951	24.15	10.16	45.18	15.06	2.64
C0353-047-1750-M	0.353	8.97	0.047	1.19	1.750	44.45	0.953	24.21	0.853	21.67	12.76	56.77	16.02	2.80	**C0353-047-1750-S**	1.021	25.92	10.16	45.18	13.93	2.44
C0353-047-1875-M	0.353	8.97	0.047	1.19	1.875	47.63	1.018	25.86	0.910	23.11	12.76	56.77	14.89	2.61	**C0353-047-1875-S**	1.091	27.70	10.16	45.18	12.95	2.27
C0353-047-2000-M	0.353	8.97	0.047	1.19	2.000	50.80	1.083	27.50	0.967	24.56	12.76	56.77	13.92	2.44	**C0353-047-2000-S**	1.161	29.48	10.16	45.18	12.10	2.12
C0353-047-2125-M	0.353	8.97	0.047	1.19	2.125	53.98	1.148	29.15	1.024	26.01	12.76	56.77	13.06	2.29	**C0353-047-2125-S**	1.230	31.25	10.16	45.18	11.36	1.99
C0353-047-2250-M	0.353	8.97	0.047	1.19	2.250	57.15	1.212	30.80	1.081	27.45	12.76	56.77	12.30	2.15	**C0353-047-2250-S**	1.300	33.03	10.16	45.18	10.70	1.87
C0353-047-2375-M	0.353	8.97	0.047	1.19	2.375	60.33	1.277	32.44	1.138	28.90	12.76	56.77	11.63	2.03	**C0353-047-2375-S**	1.370	34.81	10.16	45.18	10.11	1.77
C0353-047-2500-M	0.353	8.97	0.047	1.19	2.500	63.50	1.342	34.09	1.195	30.35	12.76	56.77	11.02	1.93	**C0353-047-2500-S**	1.440	36.58	10.16	45.18	9.59	1.68
C0353-047-2625-M	0.353	8.97	0.047	1.19	2.625	66.68	1.407	35.74	1.252	31.79	12.76	56.77	10.48	1.83	**C0353-047-2625-S**	1.510	38.36	10.16	45.18	9.11	1.59
C0353-047-2750-M	0.353	8.97	0.047	1.19	2.750	69.85	1.472	37.39	1.309	33.24	12.76	56.77	9.99	1.75	**C0353-047-2750-S**	1.580	40.14	10.16	45.18	8.68	1.52
C0353-047-2875-M	0.353	8.97	0.047	1.19	2.875	73.03	1.537	39.03	1.366	34.69	12.76	56.77	9.54	1.67	**C0353-047-2875-S**	1.650	41.91	10.16	45.18	8.29	1.45
C0353-047-3000-M	0.353	8.97	0.047	1.19	3.000	76.20	1.602	40.68	1.423	36.13	12.76	56.77	9.13	1.60	**C0353-047-3000-S**	1.720	43.69	10.16	45.18	7.94	1.39
C0353-047-3250-M	0.353	8.97	0.047	1.19	3.250	82.55	1.731	43.97	1.536	39.02	12.76	56.77	8.40	1.47	**C0353-047-3250-S**	1.860	47.24	10.16	45.18	7.31	1.28
C0353-047-3500-M	0.353	8.97	0.047	1.19	3.500	88.90	1.861	47.27	1.650	41.92	12.76	56.77	7.79	1.36	**C0353-047-3500-S**	2.000	50.80	10.16	45.18	6.77	1.18
C0353-047-3750-M	0.353	8.97	0.047	1.19	3.750	95.25	1.991	50.56	1.764	44.81	12.76	56.77	7.25	1.27	**C0353-047-3750-S**	2.140	54.35	10.16	45.18	6.31	1.10
C0353-047-4000-M	0.353	8.97	0.047	1.19	4.000	101.60	2.120	53.86	1.878	47.70	12.76	56.77	6.79	1.19	**C0353-047-4000-S**	2.280	57.90	10.16	45.18	5.90	1.03
C0353-047-4250-M	0.353	8.97	0.047	1.19	4.250	107.95	2.250	57.15	1.992	50.60	12.76	56.77	6.38	1.12	**C0353-047-4250-S**	2.420	61.46	10.16	45.18	5.55	0.97
C0353-047-4500-M	0.353	8.97	0.047	1.19	4.500	114.30	2.380	60.44	2.106	53.49	12.76	56.77	6.02	1.05	**C0353-047-4500-S**	2.559	65.01	10.16	45.18	5.23	0.92
C0353-047-4750-M	0.353	8.97	0.047	1.19	4.750	120.65	2.509	63.74	2.220	56.38	12.76	56.77	5.70	1.00	**C0353-047-4750-S**	2.699	68.56	10.16	45.18	4.95	0.87
C0353-047-5000-M	0.353	8.97	0.047	1.19	5.000	127.00	2.639	67.03	2.334	59.27	12.76	56.77	5.41	0.95	**C0353-047-5000-S**	2.839	72.12	10.16	45.18	4.70	0.82
C0353-047-5250-M	0.353	8.97	0.047	1.19	5.250	133.35	2.769	70.33	2.447	62.17	12.76	56.77	5.14	0.90	**C0353-047-5250-S**	2.979	75.67	10.16	45.18	4.47	0.78
C0353-047-5500-M	0.353	8.97	0.047	1.19	5.500	139.70	2.898	73.62	2.561	65.06	12.76	56.77	4.91	0.86	**C0353-047-5500-S**	3.119	79.22	10.16	45.18	4.27	0.75
C0353-047-5750-M	0.353	8.97	0.047	1.19	5.750	146.05	3.028	76.92	2.675	67.95	12.76	56.77	4.69	0.82	**C0353-047-5750-S**	3.259	82.78	10.16	45.18	4.08	0.71
C0353-047-6000-M	0.353	8.97	0.047	1.19	6.000	152.40	3.158	80.21	2.789	70.84	12.76	56.77	4.49	0.79	**C0353-047-6000-S**	3.399	86.33	10.16	45.18	3.91	0.68
C0353-049-0563-M	0.353	8.97	0.049	1.25	0.563	14.29	0.350	8.89	0.328	8.34	14.31	63.65	67.36	11.79	**C0353-049-0563-S**	0.368	9.35	11.39	50.65	58.57	10.25
C0353-049-0625-M	0.353	8.97	0.049	1.25	0.625	15.88	0.384	9.75	0.359	9.11	14.31	63.65	59.37	10.39	**C0353-049-0625-S**	0.404	10.27	11.39	50.65	51.63	9.03
C0353-049-0688-M	0.353	8.97	0.049	1.25	0.688	17.46	0.418	10.61	0.389	9.88	14.31	63.65	53.08	9.29	**C0353-049-0688-S**	0.441	11.20	11.39	50.65	46.15	8.08
C0353-049-0750-M	0.353	8.97	0.049	1.25	0.750	19.05	0.452	11.48	0.419	10.65	14.31	63.65	47.99	8.40	**C0353-049-0750-S**	0.477	12.12	11.39	50.65	41.73	7.30
C0353-049-0813-M	0.353	8.97	0.049	1.25	0.813	20.64	0.486	12.34	0.449	11.42	14.31	63.65	43.79	7.66	**C0353-049-0813-S**	0.513	13.04	11.39	50.65	38.08	6.66
C0353-049-0875-M	0.353	8.97	0.049	1.25	0.875	22.23	0.520	13.20	0.480	12.19	14.31	63.65	40.27	7.05	**C0353-049-0875-S**	0.550	13.96	11.39	50.65	35.02	6.13
C0353-049-0938-M	0.353	8.97	0.049	1.25	0.938	23.81	0.554	14.06	0.510	12.96	14.31	63.65	37.27	6.52	**C0353-049-0938-S**	0.586	14.89	11.39	50.65	32.41	5.67
C0353-049-1000-M	0.353	8.97	0.049	1.25	1.000	25.40	0.587	14.92	0.540	13.73	14.31	63.65	34.69	6.07	**C0353-049-1000-S**	0.622	15.81	11.39	50.65	30.16	5.28
C0353-049-1125-M	0.353	8.97	0.049	1.25	1.125	28.58	0.655	16.64	0.601	15.27	14.31	63.65	30.47	5.33	**C0353-049-1125-S**	0.695	17.66	11.39	50.65	26.49	4.64
C0353-049-1250-M	0.353	8.97	0.049	1.25	1.250	31.75	0.723	18.37	0.662	16.81	14.31	63.65	27.16	4.75	**C0353-049-1250-S**	0.768	19.50	11.39	50.65	23.62	4.13
C0353-049-1375-M	0.353	8.97	0.049	1.25	1.375	34.93	0.791	20.09	0.722	18.35	14.31	63.65	24.50	4.29	**C0353-049-1375-S**	0.841	21.35	11.39	50.65	21.31	3.73
C0353-049-1500-M	0.353	8.97	0.049	1.25	1.500	38.10	0.859	21.81	0.783	19.89	14.31	63.65	22.32	3.91	**C0353-049-1500-S**	0.913	23.19	11.39	50.65	19.41	3.40
C0353-049-1625-M	0.353	8.97	0.049	1.25	1.625	41.28	0.927	23.54	0.844	21.43	14.31	63.65	20.49	3.59	**C0353-049-1625-S**	0.986	25.04	11.39	50.65	17.82	3.12
C0353-049-1750-M	0.353	8.97	0.049	1.25	1.750	44.45	0.994	25.26	0.904	22.97	14.31	63.65	18.94	3.31	**C0353-049-1750-S**	1.059	26.89	11.39	50.65	16.47	2.88
C0353-049-1875-M	0.353	8.97	0.049	1.25	1.875	47.63	1.062	26.98	0.965	24.51	14.31	63.65	17.61	3.08	**C0353-049-1875-S**	1.131	28.73	11.39	50.65	15.31	2.68
C0353-049-2000-M	0.353	8.97	0.049	1.25	2.000	50.80	1.130	28.71	1.025	26.05	14.31	63.65	16.45	2.88	**C0353-049-2000-S**	1.204	30.58	11.39	50.65	14.30	2.50
C0353-049-2125-M	0.353	8.97	0.049	1.25	2.125	53.98	1.198	30.43	1.086	27.59	14.31	63.65	15.44	2.70	**C0353-049-2125-S**	1.277	32.43	11.39	50.65	13.42	2.35
C0353-049-2250-M	0.353	8.97	0.049	1.25	2.250	57.15	1.266	32.15	1.147	29.13	14.31	63.65	14.54	2.54	**C0353-049-2250-S**	1.349	34.27	11.39	50.65	12.64	2.21
C0353-049-2375-M	0.353	8.97	0.049	1.25	2.375	60.33	1.334	33.87	1.207	30.67	14.31	63.65	13.74	2.40	**C0353-049-2375-S**	1.422	36.12	11.39	50.65	11.95	2.09
C0353-049-2500-M	0.353	8.97	0.049	1.25	2.500	63.50	1.401	35.60	1.268	32.21	14.31	63.65	13.03	2.28	**C0353-049-2500-S**	1.495	37.96	11.39	50.65	11.33	1.98
C0353-049-2625-M	0.353	8.97	0.049	1.25	2.625	66.68	1.469	37.32	1.329	33.75	14.31	63.65	12.38	2.17	**C0353-049-2625-S**	1.567	39.81	11.39	50.65	10.77	1.88
C0353-049-2750-M	0.353	8.97	0.049	1.25	2.750	69.85	1.537	39.04	1.389	35.29	14.31	63.65	11.80	2.06	**C0353-049-2750-S**	1.640	41.66	11.39	50.65	10.26	1.80
C0353-049-2875-M	0.353	8.97	0.049	1.25	2.875	73.03	1.605	40.77	1.450	36.83	14.31	63.65	11.27	1.97	**C0353-049-2875-S**	1.713	43.50	11.39	50.65	9.80	1.71
C0353-049-3000-M	0.353	8.97	0.049	1.25	3.000	76.20	1.673	42.49	1.510	38.37	14.31	63.65	10.78	1.89	**C0353-049-3000-S**	1.785	45.35	11.39	50.65	9.38	1.64
C0353-049-3250-M	0.353	8.97	0.049	1.25	3.250	82.55	1.808	45.93	1.632	41.45	14.31	63.65	9.93	1.74	**C0353-049-3250-S**	1.931	49.04	11.39	50.65	8.63	1.51
C0353-049-3500-M	0.353	8.97	0.049	1.25	3.500	88.90	1.944	49.38	1.753	44.53	14.31	63.65	9.20	1.61	**C0353-049-3500-S**	2.076	52.73	11.39	50.65	8.00	1.40
C0353-049-3750-M	0.353	8.97	0.049	1.25	3.750	95.25	2.080	52.83	1.874	47.61	14.31	63.65	8.57	1.50	**C0353-049-3750-S**	2.221	56.42	11.39	50.65	7.45	1.30
C0353-049-4000-M	0.353	8.97	0.049	1.25	4.000	101.60	2.215	56.27	1.996	50.69	14.31	63.65	8.02	1.40	**C0353-049-4000-S**	2.367	60.12	11.39	50.65	6.97	1.22
C0353-049-4250-M	0.353	8.97	0.049	1.25	4.250	107.95	2.351	59.72	2.117	53.77	14.31	63.65	7.54	1.32	**C0353-049-4250-S**	2.512	63.81	11.39	50.65	6.55	1.15

FOR INFORMATION ON ALTERNATIVE FINISHES, SEE PAGE 311

Part Numbers with an "*" are squared and not ground. **Part Numbers in bold** represent the newly expanded Associated Spring RAYMOND compression spring offering.

MUSIC WIRE															STAINLESS STEEL					
Catalog #	Outside Diameter (OD)		Wire Diameter (d)		Free Length (L) Approx		Load Length (L_1)		Solid Height (Sh) Approx		Load (P) at L_1		Spring Rate (R)		Catalog #	Load Length (L_1)		Load (P) at L_1		Spring Rate (R)	
	in	mm	in	mm	in	mm	in	mm	in	mm	lb	N	lb/in	N/mm		in	mm	lb	N	lb/in	N/mm
C0353-049-4500-M	**0.353**	**8.97**	**0.049**	**1.25**	**4.500**	**114.30**	**2.487**	**63.16**	**2.238**	**56.85**	**14.31**	**63.65**	**7.11**	**1.24**	**C0353-049-4500-S**	**2.658**	**67.50**	**11.39**	**50.65**	**6.18**	**1.08**
C0353-049-4750-M	**0.353**	**8.97**	**0.049**	**1.25**	**4.750**	**120.65**	**2.622**	**66.61**	**2.359**	**59.93**	**14.31**	**63.65**	**6.73**	**1.18**	**C0353-049-4750-S**	**2.803**	**71.19**	**11.39**	**50.65**	**5.85**	**1.02**
C0353-049-5000-M	**0.353**	**8.97**	**0.049**	**1.25**	**5.000**	**127.00**	**2.758**	**70.06**	**2.481**	**63.01**	**14.31**	**63.65**	**6.38**	**1.12**	**C0353-049-5000-S**	**2.948**	**74.89**	**11.39**	**50.65**	**5.55**	**0.97**
C0353-049-5250-M	**0.353**	**8.97**	**0.049**	**1.25**	**5.250**	**133.35**	**2.894**	**73.50**	**2.602**	**66.09**	**14.31**	**63.65**	**6.07**	**1.06**	**C0353-049-5250-S**	**3.094**	**78.58**	**11.39**	**50.65**	**5.28**	**0.92**
C0353-049-5500-M	**0.353**	**8.97**	**0.049**	**1.25**	**5.500**	**139.70**	**3.029**	**76.95**	**2.723**	**69.17**	**14.31**	**63.65**	**5.79**	**1.01**	**C0353-049-5500-S**	**3.239**	**82.27**	**11.39**	**50.65**	**5.04**	**0.88**
C0353-049-5750-M	**0.353**	**8.97**	**0.049**	**1.25**	**5.750**	**146.05**	**3.165**	**80.39**	**2.844**	**72.25**	**14.31**	**63.65**	**5.54**	**0.97**	**C0353-049-5750-S**	**3.384**	**85.96**	**11.39**	**50.65**	**4.81**	**0.84**
C0353-049-6000-M	**0.353**	**8.97**	**0.049**	**1.25**	**6.000**	**152.40**	**3.301**	**83.84**	**2.966**	**75.33**	**14.31**	**63.65**	**5.30**	**0.93**	**C0353-049-6000-S**	**3.530**	**89.65**	**11.39**	**50.65**	**4.61**	**0.81**
C0353-051-0563-M	**0.353**	**8.97**	**0.051**	**1.30**	**0.563**	**14.29**	**0.363**	**9.21**	**0.344**	**8.73**	**15.97**	**71.02**	**79.89**	**13.98**	**C0353-051-0563-S**	**0.380**	**9.64**	**12.70**	**56.51**	**69.47**	**12.16**
C0353-051-0625-M	**0.353**	**8.97**	**0.051**	**1.30**	**0.625**	**15.88**	**0.398**	**10.11**	**0.376**	**9.55**	**15.97**	**71.02**	**70.35**	**12.31**	**C0353-051-0625-S**	**0.417**	**10.60**	**12.70**	**56.51**	**61.17**	**10.70**
C0353-051-0688-M	**0.353**	**8.97**	**0.051**	**1.30**	**0.688**	**17.46**	**0.433**	**11.01**	**0.408**	**10.36**	**15.97**	**71.02**	**62.84**	**11.00**	**C0353-051-0688-S**	**0.455**	**11.56**	**12.70**	**56.51**	**54.64**	**9.56**
C0353-051-0750-M	**0.353**	**8.97**	**0.051**	**1.30**	**0.750**	**19.05**	**0.469**	**11.91**	**0.440**	**11.18**	**15.97**	**71.02**	**56.78**	**9.94**	**C0353-051-0750-S**	**0.493**	**12.51**	**12.70**	**56.51**	**49.37**	**8.64**
C0353-051-0813-M	**0.353**	**8.97**	**0.051**	**1.30**	**0.813**	**20.64**	**0.504**	**12.81**	**0.472**	**11.99**	**15.97**	**71.02**	**51.78**	**9.06**	**C0353-051-0813-S**	**0.530**	**13.47**	**12.70**	**56.51**	**45.03**	**7.88**
C0353-051-0875-M	**0.353**	**8.97**	**0.051**	**1.30**	**0.875**	**22.23**	**0.540**	**13.70**	**0.504**	**12.81**	**15.97**	**71.02**	**47.59**	**8.33**	**C0353-051-0875-S**	**0.568**	**14.43**	**12.70**	**56.51**	**41.39**	**7.24**
C0353-051-0938-M	**0.353**	**8.97**	**0.051**	**1.30**	**0.938**	**23.81**	**0.575**	**14.60**	**0.536**	**13.63**	**15.97**	**71.02**	**44.03**	**7.71**	**C0353-051-0938-S**	**0.606**	**15.39**	**12.70**	**56.51**	**38.29**	**6.70**
C0353-051-1000-M	**0.353**	**8.97**	**0.051**	**1.30**	**1.000**	**25.40**	**0.610**	**15.50**	**0.569**	**14.44**	**15.97**	**71.02**	**40.97**	**7.17**	**C0353-051-1000-S**	**0.643**	**16.34**	**12.70**	**56.51**	**35.63**	**6.23**
C0353-051-1125-M	**0.353**	**8.97**	**0.051**	**1.30**	**1.125**	**28.58**	**0.681**	**17.30**	**0.633**	**16.07**	**15.97**	**71.02**	**35.96**	**6.29**	**C0353-051-1125-S**	**0.719**	**18.26**	**12.70**	**56.51**	**31.27**	**5.47**
C0353-051-1250-M	**0.353**	**8.97**	**0.051**	**1.30**	**1.250**	**31.75**	**0.752**	**19.10**	**0.697**	**17.71**	**15.97**	**71.02**	**32.05**	**5.61**	**C0353-051-1250-S**	**0.794**	**20.17**	**12.70**	**56.51**	**27.87**	**4.88**
C0353-051-1375-M	**0.353**	**8.97**	**0.051**	**1.30**	**1.375**	**34.93**	**0.823**	**20.89**	**0.761**	**19.34**	**15.97**	**71.02**	**28.90**	**5.06**	**C0353-051-1375-S**	**0.869**	**22.09**	**12.70**	**56.51**	**25.13**	**4.40**
C0353-051-1500-M	**0.353**	**8.97**	**0.051**	**1.30**	**1.500**	**38.10**	**0.893**	**22.69**	**0.826**	**20.97**	**15.97**	**71.02**	**26.32**	**4.61**	**C0353-051-1500-S**	**0.945**	**24.00**	**12.70**	**56.51**	**22.88**	**4.00**
C0353-051-1625-M	**0.353**	**8.97**	**0.051**	**1.30**	**1.625**	**41.28**	**0.964**	**24.49**	**0.890**	**22.60**	**15.97**	**71.02**	**24.16**	**4.23**	**C0353-051-1625-S**	**1.020**	**25.91**	**12.70**	**56.51**	**21.01**	**3.68**
C0353-051-1750-M	**0.353**	**8.97**	**0.051**	**1.30**	**1.750**	**44.45**	**1.035**	**26.28**	**0.954**	**24.23**	**15.97**	**71.02**	**22.32**	**3.91**	**C0353-051-1750-S**	**1.096**	**27.83**	**12.70**	**56.51**	**19.41**	**3.40**
C0353-051-1875-M	**0.353**	**8.97**	**0.051**	**1.30**	**1.875**	**47.63**	**1.106**	**28.08**	**1.018**	**25.86**	**15.97**	**71.02**	**20.75**	**3.63**	**C0353-051-1875-S**	**1.171**	**29.74**	**12.70**	**56.51**	**18.04**	**3.16**
C0353-051-2000-M	**0.353**	**8.97**	**0.051**	**1.30**	**2.000**	**50.80**	**1.176**	**29.88**	**1.083**	**27.50**	**15.97**	**71.02**	**19.38**	**3.39**	**C0353-051-2000-S**	**1.246**	**31.66**	**12.70**	**56.51**	**16.86**	**2.95**
C0353-051-2125-M	**0.353**	**8.97**	**0.051**	**1.30**	**2.125**	**53.98**	**1.247**	**31.68**	**1.147**	**29.13**	**15.97**	**71.02**	**18.19**	**3.18**	**C0353-051-2125-S**	**1.322**	**33.57**	**12.70**	**56.51**	**15.81**	**2.77**
C0353-051-2250-M	**0.353**	**8.97**	**0.051**	**1.30**	**2.250**	**57.15**	**1.318**	**33.47**	**1.211**	**30.76**	**15.97**	**71.02**	**17.13**	**3.00**	**C0353-051-2250-S**	**1.397**	**35.48**	**12.70**	**56.51**	**14.89**	**2.61**
C0353-051-2375-M	**0.353**	**8.97**	**0.051**	**1.30**	**2.375**	**60.33**	**1.389**	**35.27**	**1.275**	**32.39**	**15.97**	**71.02**	**16.19**	**2.83**	**C0353-051-2375-S**	**1.472**	**37.40**	**12.70**	**56.51**	**14.08**	**2.46**
C0353-051-2500-M	**0.353**	**8.97**	**0.051**	**1.30**	**2.500**	**63.50**	**1.459**	**37.07**	**1.339**	**34.02**	**15.97**	**71.02**	**15.34**	**2.68**	**C0353-051-2500-S**	**1.548**	**39.31**	**12.70**	**56.51**	**13.34**	**2.33**
C0353-051-2625-M	**0.353**	**8.97**	**0.051**	**1.30**	**2.625**	**66.68**	**1.530**	**38.86**	**1.404**	**35.65**	**15.97**	**71.02**	**14.58**	**2.55**	**C0353-051-2625-S**	**1.623**	**41.23**	**12.70**	**56.51**	**12.68**	**2.22**
C0353-051-2750-M	**0.353**	**8.97**	**0.051**	**1.30**	**2.750**	**69.85**	**1.601**	**40.66**	**1.468**	**37.29**	**15.97**	**71.02**	**13.89**	**2.43**	**C0353-051-2750-S**	**1.698**	**43.14**	**12.70**	**56.51**	**12.08**	**2.11**
C0353-051-2875-M	**0.353**	**8.97**	**0.051**	**1.30**	**2.875**	**73.03**	**1.672**	**42.46**	**1.532**	**38.92**	**15.97**	**71.02**	**13.27**	**2.32**	**C0353-051-2875-S**	**1.774**	**45.06**	**12.70**	**56.51**	**11.54**	**2.02**
C0353-051-3000-M	**0.353**	**8.97**	**0.051**	**1.30**	**3.000**	**76.20**	**1.742**	**44.26**	**1.596**	**40.55**	**15.97**	**71.02**	**12.70**	**2.22**	**C0353-051-3000-S**	**1.849**	**46.97**	**12.70**	**56.51**	**11.04**	**1.93**
C0353-051-3250-M	**0.353**	**8.97**	**0.051**	**1.30**	**3.250**	**82.55**	**1.884**	**47.85**	**1.725**	**43.81**	**15.97**	**71.02**	**11.69**	**2.05**	**C0353-051-3250-S**	**2.000**	**50.80**	**12.70**	**56.51**	**10.16**	**1.78**
C0353-051-3500-M	**0.353**	**8.97**	**0.051**	**1.30**	**3.500**	**88.90**	**2.025**	**51.44**	**1.853**	**47.08**	**15.97**	**71.02**	**10.83**	**1.89**	**C0353-051-3500-S**	**2.151**	**54.63**	**12.70**	**56.51**	**9.42**	**1.65**
C0353-051-3750-M	**0.353**	**8.97**	**0.051**	**1.30**	**3.750**	**95.25**	**2.167**	**55.04**	**1.982**	**50.34**	**15.97**	**71.02**	**10.09**	**1.76**	**C0353-051-3750-S**	**2.301**	**58.45**	**12.70**	**56.51**	**8.77**	**1.53**
C0353-051-4000-M	**0.353**	**8.97**	**0.051**	**1.30**	**4.000**	**101.60**	**2.308**	**58.63**	**2.110**	**53.60**	**15.97**	**71.02**	**9.44**	**1.65**	**C0353-051-4000-S**	**2.452**	**62.28**	**12.70**	**56.51**	**8.21**	**1.44**
C0353-051-4250-M	**0.353**	**8.97**	**0.051**	**1.30**	**4.250**	**107.95**	**2.450**	**62.23**	**2.239**	**56.87**	**15.97**	**71.02**	**8.87**	**1.55**	**C0353-051-4250-S**	**2.603**	**66.11**	**12.70**	**56.51**	**7.71**	**1.35**
C0353-051-4500-M	**0.353**	**8.97**	**0.051**	**1.30**	**4.500**	**114.30**	**2.591**	**65.82**	**2.367**	**60.13**	**15.97**	**71.02**	**8.37**	**1.46**	**C0353-051-4500-S**	**2.754**	**69.94**	**12.70**	**56.51**	**7.27**	**1.27**
C0353-051-4750-M	**0.353**	**8.97**	**0.051**	**1.30**	**4.750**	**120.65**	**2.733**	**69.42**	**2.496**	**63.39**	**15.97**	**71.02**	**7.92**	**1.39**	**C0353-051-4750-S**	**2.904**	**73.77**	**12.70**	**56.51**	**6.88**	**1.20**
C0353-051-5000-M	**0.353**	**8.97**	**0.051**	**1.30**	**5.000**	**127.00**	**2.874**	**73.01**	**2.624**	**66.66**	**15.97**	**71.02**	**7.51**	**1.31**	**C0353-051-5000-S**	**3.055**	**77.60**	**12.70**	**56.51**	**6.53**	**1.14**
C0353-051-5250-M	**0.353**	**8.97**	**0.051**	**1.30**	**5.250**	**133.35**	**3.016**	**76.60**	**2.753**	**69.92**	**15.97**	**71.02**	**7.15**	**1.25**	**C0353-051-5250-S**	**3.206**	**81.43**	**12.70**	**56.51**	**6.21**	**1.09**
C0353-051-5500-M	**0.353**	**8.97**	**0.051**	**1.30**	**5.500**	**139.70**	**3.157**	**80.20**	**2.881**	**73.18**	**15.97**	**71.02**	**6.82**	**1.19**	**C0353-051-5500-S**	**3.356**	**85.25**	**12.70**	**56.51**	**5.93**	**1.04**
C0353-051-5750-M	**0.353**	**8.97**	**0.051**	**1.30**	**5.750**	**146.05**	**3.299**	**83.79**	**3.010**	**76.45**	**15.97**	**71.02**	**6.51**	**1.14**	**C0353-051-5750-S**	**3.507**	**89.08**	**12.70**	**56.51**	**5.66**	**0.99**
C0353-051-6000-M	**0.353**	**8.97**	**0.051**	**1.30**	**6.000**	**152.40**	**3.440**	**87.39**	**3.138**	**79.71**	**15.97**	**71.02**	**6.24**	**1.09**	**C0353-051-6000-S**	**3.658**	**92.91**	**12.70**	**56.51**	**5.42**	**0.95**
C0353-055-0563-M	**0.353**	**8.97**	**0.055**	**1.40**	**0.563**	**14.29**	**0.386**	**9.82**	**0.373**	**9.48**	**19.62**	**87.26**	**111.42**	**19.50**	**C0353-055-0563-S**	**0.401**	**10.20**	**15.60**	**69.39**	**96.89**	**16.95**
C0353-055-0625-M	**0.353**	**8.97**	**0.055**	**1.40**	**0.625**	**15.88**	**0.425**	**10.79**	**0.409**	**10.38**	**19.62**	**87.26**	**97.90**	**17.13**	**C0353-055-0625-S**	**0.442**	**11.22**	**15.60**	**69.39**	**85.13**	**14.90**
C0353-055-0688-M	**0.353**	**8.97**	**0.055**	**1.40**	**0.688**	**17.46**	**0.463**	**11.76**	**0.444**	**11.29**	**19.62**	**87.26**	**87.30**	**15.28**	**C0353-055-0688-S**	**0.482**	**12.24**	**15.60**	**69.39**	**75.92**	**13.29**
C0353-055-0750-M	**0.353**	**8.97**	**0.055**	**1.40**	**0.750**	**19.05**	**0.501**	**12.72**	**0.480**	**12.19**	**19.62**	**87.26**	**78.78**	**13.79**	**C0353-055-0750-S**	**0.522**	**13.27**	**15.60**	**69.39**	**68.50**	**11.99**
C0353-055-0813-M	**0.353**	**8.97**	**0.055**	**1.40**	**0.813**	**20.64**	**0.539**	**13.69**	**0.515**	**13.09**	**19.62**	**87.26**	**71.77**	**12.56**	**C0353-055-0813-S**	**0.563**	**14.29**	**15.60**	**69.39**	**62.41**	**10.92**
C0353-055-0875-M	**0.353**	**8.97**	**0.055**	**1.40**	**0.875**	**22.23**	**0.577**	**14.66**	**0.551**	**14.00**	**19.62**	**87.26**	**65.90**	**11.53**	**C0353-055-0875-S**	**0.603**	**15.31**	**15.60**	**69.39**	**57.31**	**10.03**
C0353-055-0938-M	**0.353**	**8.97**	**0.055**	**1.40**	**0.938**	**23.81**	**0.616**	**15.63**	**0.587**	**14.90**	**19.62**	**87.26**	**60.93**	**10.66**	**C0353-055-0938-S**	**0.643**	**16.33**	**15.60**	**69.39**	**52.98**	**9.27**
C0353-055-1000-M	**0.353**	**8.97**	**0.055**	**1.40**	**1.000**	**25.40**	**0.654**	**16.60**	**0.622**	**15.80**	**19.62**	**87.26**	**56.65**	**9.91**	**C0353-055-1000-S**	**0.683**	**17.36**	**15.60**	**69.39**	**49.26**	**8.62**
C0353-055-1125-M	**0.353**	**8.97**	**0.055**	**1.40**	**1.125**	**28.58**	**0.730**	**18.54**	**0.693**	**17.61**	**19.62**	**87.26**	**49.67**	**8.69**	**C0353-055-1125-S**	**0.764**	**19.40**	**15.60**	**69.39**	**43.19**	**7.56**
C0353-055-1250-M	**0.353**	**8.97**	**0.055**	**1.40**	**1.250**	**31.75**	**0.806**	**20.48**	**0.765**	**19.42**	**19.62**	**87.26**	**44.23**	**7.74**	**C0353-055-1250-S**	**0.844**	**21.45**	**15.60**	**69.39**	**38.46**	**6.73**
C0353-055-1375-M	**0.353**	**8.97**	**0.055**	**1.40**	**1.375**	**34.93**	**0.883**	**22.42**	**0.836**	**21.23**	**19.62**	**87.26**	**39.86**	**6.97**	**C0353-055-1375-S**	**0.925**	**23.49**	**15.60**	**69.39**	**34.66**	**6.06**
C0353-055-1500-M	**0.353**	**8.97**	**0.055**	**1.40**	**1.500**	**38.10**	**0.959**	**24.36**	**0.907**	**23.04**	**19.62**	**87.26**	**36.27**	**6.35**	**C0353-055-1500-S**	**1.005**	**25.54**	**15.60**	**69.39**	**31.54**	**5.52**
C0353-055-1625-M	**0.353**	**8.97**	**0.055**	**1.40**	**1.625**	**41.28**	**1.036**	**26.30**	**0.978**	**24.84**	**19.62**	**87.26**	**33.28**	**5.82**	**C0353-055-1625-S**	**1.086**	**27.58**	**15.60**	**69.39**	**28.94**	**5.06**
C0353-055-1750-M	**0.353**	**8.97**	**0.055**	**1.40**	**1.750**	**44.45**	**1.112**	**28.24**	**1.049**	**26.65**	**19.62**	**87.26**	**30.74**	**5.38**	**C0353-055-1750-S**	**1.166**	**29.63**	**15.60**	**69.39**	**26.73**	**4.68**
C0353-055-1875-M	**0.353**	**8.97**	**0.055**	**1.40**	**1.875**	**47.63**	**1.188**	**30.18**	**1.120**	**28.46**	**19.62**	**87.26**	**28.57**	**5.00**	**C0353-055-1875-S**	**1.247**	**31.67**	**15.60**	**69.39**	**24.84**	**4.35**
C0353-055-2000-M	**0.353**	**8.97**	**0.055**	**1.40**	**2.000**	**50.80**	**1.265**	**32.12**	**1.192**	**30.27**	**19.62**	**87.26**	**26.68**	**4.67**	**C0353-055-2000-S**	**1.328**	**33.72**	**15.60**	**69.39**	**23.20**	**4.06**
C0353-055-2125-M	**0.353**	**8.97**	**0.055**	**1.40**	**2.125**	**53.98**	**1.341**	**34.06**	**1.263**	**32.07**	**19.62**	**87.26**	**25.02**	**4.38**	**C0353-055-2125-S**	**1.408**	**35.76**	**15.60**	**69.39**	**21.76**	**3.81**
C0353-055-2250-M	**0.353**	**8.97**	**0.055**	**1.40**	**2.250**	**57.15**	**1.417**	**36.00**	**1.334**	**33.88**	**19.62**	**87.26**	**23.56**	**4.12**	**C0353-055-2250-S**	**1.489**	**37.81**	**15.60**	**69.39**	**20.49**	**3.59**
C0353-055-2375-M	**0.353**	**8.97**	**0.055**	**1.40**	**2.375**	**60.33**	**1.494**	**37.94**	**1.405**	**35.69**	**19.62**	**87.26**	**22.26**	**3.90**	**C0353-055-2375-S**	**1.569**	**39.86**	**15.60**	**69.39**	**19.36**	**3.39**
C0353-055-2500-M	**0.353**	**8.97**	**0.055**	**1.40**	**2.500**	**63.50**	**1.570**	**39.88**	**1.476**	**37.50**	**19.62**	**87.26**	**21.10**	**3.69**	**C0353-055-2500-S**	**1.650**	**41.90**	**15.60**	**69.39**	**18.34**	**3.21**
C0353-055-2625-M	**0.353**	**8.97**	**0.055**	**1.40**	**2.625**	**66.68**	**1.646**	**41.82**	**1.547**	**39.30**	**19.62**	**87.26**	**20.05**	**3.51**	**C0353-055-2625-S**	**1.730**	**43.95**	**15.60**	**69.39**	**17.43**	**3.05**

Part Numbers with an "*" are squared and not ground. **Part Numbers in bold** represent the newly expanded Associated Spring RAYMOND compression spring offering.

MUSIC WIRE															STAINLESS STEEL					
Catalog #	Outside Diameter (OD)		Wire Diameter (d)		Free Length (L) Approx		Load Length (L_1)		Solid Height (Sh) Approx		Load (P) at L_1		Spring Rate (R)		Catalog #	Load Length (L_1)		Load (P) at L_1		Spring Rate (R)	
	in	mm	in	mm	in	mm	in	mm	in	mm	lb	N	lb/in	N/mm		in	mm	lb	N	lb/in	N/mm
C0353-055-2750-M	**0.353**	**8.97**	**0.055**	**1.40**	**2.750**	**69.85**	**1.723**	**43.76**	**1.619**	**41.11**	**19.62**	**87.26**	**19.10**	**3.34**	**C0353-055-2750-S**	**1.811**	**45.99**	**15.60**	**69.39**	**16.61**	**2.91**
C0353-055-2875-M	**0.353**	**8.97**	**0.055**	**1.40**	**2.875**	**73.03**	**1.799**	**45.70**	**1.690**	**42.92**	**19.62**	**87.26**	**18.23**	**3.19**	**C0353-055-2875-S**	**1.891**	**48.04**	**15.60**	**69.39**	**15.86**	**2.77**
C0353-055-3000-M	**0.353**	**8.97**	**0.055**	**1.40**	**3.000**	**76.20**	**1.876**	**47.64**	**1.761**	**44.73**	**19.62**	**87.26**	**17.45**	**3.05**	**C0353-055-3000-S**	**1.972**	**50.08**	**15.60**	**69.39**	**15.17**	**2.65**
C0353-055-3250-M	**0.353**	**8.97**	**0.055**	**1.40**	**3.250**	**82.55**	**2.028**	**51.52**	**1.903**	**48.34**	**19.62**	**87.26**	**16.06**	**2.81**	**C0353-055-3250-S**	**2.133**	**54.17**	**15.60**	**69.39**	**13.96**	**2.44**
C0353-055-3500-M	**0.353**	**8.97**	**0.055**	**1.40**	**3.500**	**88.90**	**2.181**	**55.40**	**2.046**	**51.96**	**19.62**	**87.26**	**14.87**	**2.60**	**C0353-055-3500-S**	**2.294**	**58.26**	**15.60**	**69.39**	**12.93**	**2.26**
C0353-055-3750-M	**0.353**	**8.97**	**0.055**	**1.40**	**3.750**	**95.25**	**2.334**	**59.28**	**2.188**	**55.57**	**19.62**	**87.26**	**13.85**	**2.42**	**C0353-055-3750-S**	**2.455**	**62.35**	**15.60**	**69.39**	**12.04**	**2.11**
C0353-055-4000-M	**0.353**	**8.97**	**0.055**	**1.40**	**4.000**	**101.60**	**2.486**	**63.16**	**2.330**	**59.19**	**19.62**	**87.26**	**12.96**	**2.27**	**C0353-055-4000-S**	**2.616**	**66.44**	**15.60**	**69.39**	**11.27**	**1.97**
C0353-055-4250-M	**0.353**	**8.97**	**0.055**	**1.40**	**4.250**	**107.95**	**2.639**	**67.03**	**2.473**	**62.81**	**19.62**	**87.26**	**12.18**	**2.13**	**C0353-055-4250-S**	**2.777**	**70.53**	**15.60**	**69.39**	**10.59**	**1.85**
C0353-055-4500-M	**0.353**	**8.97**	**0.055**	**1.40**	**4.500**	**114.30**	**2.792**	**70.91**	**2.615**	**66.42**	**19.62**	**87.26**	**11.48**	**2.01**	**C0353-055-4500-S**	**2.938**	**74.63**	**15.60**	**69.39**	**9.99**	**1.75**
C0353-055-4750-M	**0.353**	**8.97**	**0.055**	**1.40**	**4.750**	**120.65**	**2.945**	**74.79**	**2.757**	**70.04**	**19.62**	**87.26**	**10.87**	**1.90**	**C0353-055-4750-S**	**3.099**	**78.72**	**15.60**	**69.39**	**9.45**	**1.65**
C0353-055-5000-M	**0.353**	**8.97**	**0.055**	**1.40**	**5.000**	**127.00**	**3.097**	**78.67**	**2.900**	**73.65**	**19.62**	**87.26**	**10.31**	**1.80**	**C0353-055-5000-S**	**3.260**	**82.81**	**15.60**	**69.39**	**8.97**	**1.57**
C0353-055-5250-M	**0.353**	**8.97**	**0.055**	**1.40**	**5.250**	**133.35**	**3.250**	**82.55**	**3.042**	**77.27**	**19.62**	**87.26**	**9.81**	**1.72**	**C0353-055-5250-S**	**3.421**	**86.90**	**15.60**	**69.39**	**8.53**	**1.49**
C0353-055-5500-M	**0.353**	**8.97**	**0.055**	**1.40**	**5.500**	**139.70**	**3.403**	**86.43**	**3.184**	**80.88**	**19.62**	**87.26**	**9.35**	**1.64**	**C0353-055-5500-S**	**3.582**	**90.99**	**15.60**	**69.39**	**8.13**	**1.42**
C0353-055-5750-M	**0.353**	**8.97**	**0.055**	**1.40**	**5.750**	**146.05**	**3.556**	**90.31**	**3.327**	**84.50**	**19.62**	**87.26**	**8.94**	**1.56**	**C0353-055-5750-S**	**3.743**	**95.08**	**15.60**	**69.39**	**7.77**	**1.36**
C0353-059-0563-M	**0.353**	**8.97**	**0.059**	**1.50**	**0.563**	**14.29**	**0.408**	**10.37**	**0.400**	**10.16**	**23.73**	**105.55**	**153.79**	**26.91**	**C0353-059-0563-S**	**0.422**	**10.71**	**18.85**	**83.85**	**133.73**	**23.40**
C0353-059-0625-M	**0.353**	**8.97**	**0.059**	**1.50**	**0.625**	**15.88**	**0.449**	**11.40**	**0.439**	**11.15**	**23.73**	**105.55**	**134.83**	**23.60**	**C0353-059-0625-S**	**0.464**	**11.79**	**18.85**	**83.85**	**117.24**	**20.52**
C0353-059-0688-M	**0.353**	**8.97**	**0.059**	**1.50**	**0.688**	**17.46**	**0.490**	**12.44**	**0.478**	**12.13**	**23.73**	**105.55**	**120.03**	**21.01**	**C0353-059-0688-S**	**0.507**	**12.88**	**18.85**	**83.85**	**104.38**	**18.27**
C0353-059-0750-M	**0.353**	**8.97**	**0.059**	**1.50**	**0.750**	**19.05**	**0.531**	**13.48**	**0.516**	**13.12**	**23.73**	**105.55**	**108.16**	**18.93**	**C0353-059-0750-S**	**0.550**	**13.96**	**18.85**	**83.85**	**94.05**	**16.46**
C0353-059-0813-M	**0.353**	**8.97**	**0.059**	**1.50**	**0.813**	**20.64**	**0.571**	**14.51**	**0.555**	**14.11**	**23.73**	**105.55**	**98.43**	**17.22**	**C0353-059-0813-S**	**0.592**	**15.04**	**18.85**	**83.85**	**85.59**	**14.98**
C0353-059-0875-M	**0.353**	**8.97**	**0.059**	**1.50**	**0.875**	**22.23**	**0.612**	**15.55**	**0.594**	**15.09**	**23.73**	**105.55**	**90.30**	**15.80**	**C0353-059-0875-S**	**0.635**	**16.13**	**18.85**	**83.85**	**78.52**	**13.74**
C0353-059-0938-M	**0.353**	**8.97**	**0.059**	**1.50**	**0.938**	**23.81**	**0.653**	**16.59**	**0.633**	**16.08**	**23.73**	**105.55**	**83.42**	**14.60**	**C0353-059-0938-S**	**0.678**	**17.21**	**18.85**	**83.85**	**72.53**	**12.69**
C0353-059-1000-M	**0.353**	**8.97**	**0.059**	**1.50**	**1.000**	**25.40**	**0.694**	**17.62**	**0.672**	**17.06**	**23.73**	**105.55**	**77.50**	**13.56**	**C0353-059-1000-S**	**0.720**	**18.30**	**18.85**	**83.85**	**67.40**	**11.79**
C0353-059-1125-M	**0.353**	**8.97**	**0.059**	**1.50**	**1.125**	**28.58**	**0.775**	**19.70**	**0.749**	**19.04**	**23.73**	**105.55**	**67.88**	**11.88**	**C0353-059-1125-S**	**0.806**	**20.46**	**18.85**	**83.85**	**59.03**	**10.33**
C0353-059-1250-M	**0.353**	**8.97**	**0.059**	**1.50**	**1.250**	**31.75**	**0.857**	**21.77**	**0.827**	**21.01**	**23.73**	**105.55**	**60.39**	**10.57**	**C0353-059-1250-S**	**0.891**	**22.63**	**18.85**	**83.85**	**52.51**	**9.19**
C0353-059-1375-M	**0.353**	**8.97**	**0.059**	**1.50**	**1.375**	**34.93**	**0.939**	**23.84**	**0.905**	**22.98**	**23.73**	**105.55**	**54.38**	**9.52**	**C0353-059-1375-S**	**0.976**	**24.80**	**18.85**	**83.85**	**47.29**	**8.28**
C0353-059-1500-M	**0.353**	**8.97**	**0.059**	**1.50**	**1.500**	**38.10**	**1.020**	**25.91**	**0.982**	**24.95**	**23.73**	**105.55**	**49.46**	**8.66**	**C0353-059-1500-S**	**1.062**	**26.97**	**18.85**	**83.85**	**43.01**	**7.53**
C0353-059-1625-M	**0.353**	**8.97**	**0.059**	**1.50**	**1.625**	**41.28**	**1.102**	**27.99**	**1.060**	**26.92**	**23.73**	**105.55**	**45.36**	**7.94**	**C0353-059-1625-S**	**1.147**	**29.14**	**18.85**	**83.85**	**39.44**	**6.90**
C0353-059-1750-M	**0.353**	**8.97**	**0.059**	**1.50**	**1.750**	**44.45**	**1.183**	**30.06**	**1.138**	**28.90**	**23.73**	**105.55**	**41.89**	**7.33**	**C0353-059-1750-S**	**1.232**	**31.30**	**18.85**	**83.85**	**36.42**	**6.37**
C0353-059-1875-M	**0.353**	**8.97**	**0.059**	**1.50**	**1.875**	**47.63**	**1.265**	**32.13**	**1.215**	**30.87**	**23.73**	**105.55**	**38.91**	**6.81**	**C0353-059-1875-S**	**1.318**	**33.47**	**18.85**	**83.85**	**33.83**	**5.92**
C0353-059-2000-M	**0.353**	**8.97**	**0.059**	**1.50**	**2.000**	**50.80**	**1.347**	**34.21**	**1.293**	**32.84**	**23.73**	**105.55**	**36.32**	**6.36**	**C0353-059-2000-S**	**1.403**	**35.64**	**18.85**	**83.85**	**31.58**	**5.53**
C0353-059-2125-M	**0.353**	**8.97**	**0.059**	**1.50**	**2.125**	**53.98**	**1.428**	**36.28**	**1.371**	**34.81**	**23.73**	**105.55**	**34.06**	**5.96**	**C0353-059-2125-S**	**1.489**	**37.81**	**18.85**	**83.85**	**29.62**	**5.18**
C0353-059-2250-M	**0.353**	**8.97**	**0.059**	**1.50**	**2.250**	**57.15**	**1.510**	**38.35**	**1.448**	**36.79**	**23.73**	**105.55**	**32.06**	**5.61**	**C0353-059-2250-S**	**1.574**	**39.98**	**18.85**	**83.85**	**27.88**	**4.88**
C0353-059-2375-M	**0.353**	**8.97**	**0.059**	**1.50**	**2.375**	**60.33**	**1.592**	**40.42**	**1.526**	**38.76**	**23.73**	**105.55**	**30.29**	**5.30**	**C0353-059-2375-S**	**1.659**	**42.15**	**18.85**	**83.85**	**26.34**	**4.61**
C0353-059-2500-M	**0.353**	**8.97**	**0.059**	**1.50**	**2.500**	**63.50**	**1.673**	**42.50**	**1.604**	**40.73**	**23.73**	**105.55**	**28.70**	**5.02**	**C0353-059-2500-S**	**1.745**	**44.31**	**18.85**	**83.85**	**24.96**	**4.37**
C0353-059-2625-M	**0.353**	**8.97**	**0.059**	**1.50**	**2.625**	**66.68**	**1.755**	**44.57**	**1.681**	**42.70**	**23.73**	**105.55**	**27.27**	**4.77**	**C0353-059-2625-S**	**1.830**	**46.48**	**18.85**	**83.85**	**23.71**	**4.15**
C0353-059-2750-M	**0.353**	**8.97**	**0.059**	**1.50**	**2.750**	**69.85**	**1.836**	**46.64**	**1.759**	**44.68**	**23.73**	**105.55**	**25.97**	**4.55**	**C0353-059-2750-S**	**1.915**	**48.65**	**18.85**	**83.85**	**22.58**	**3.95**
C0353-059-2875-M	**0.353**	**8.97**	**0.059**	**1.50**	**2.875**	**73.03**	**1.918**	**48.72**	**1.837**	**46.65**	**23.73**	**105.55**	**24.79**	**4.34**	**C0353-059-2875-S**	**2.001**	**50.82**	**18.85**	**83.85**	**21.56**	**3.77**
C0353-059-3000-M	**0.353**	**8.97**	**0.059**	**1.50**	**3.000**	**76.20**	**2.000**	**50.79**	**1.914**	**48.62**	**23.73**	**105.55**	**23.72**	**4.15**	**C0353-059-3000-S**	**2.086**	**52.99**	**18.85**	**83.85**	**20.63**	**3.61**
C0353-059-3250-M	**0.353**	**8.97**	**0.059**	**1.50**	**3.250**	**82.55**	**2.163**	**54.93**	**2.069**	**52.56**	**23.73**	**105.55**	**21.83**	**3.82**	**C0353-059-3250-S**	**2.257**	**57.32**	**18.85**	**83.85**	**18.98**	**3.32**
C0353-059-3500-M	**0.353**	**8.97**	**0.059**	**1.50**	**3.500**	**88.90**	**2.326**	**59.08**	**2.225**	**56.51**	**23.73**	**105.55**	**20.21**	**3.54**	**C0353-059-3500-S**	**2.427**	**61.66**	**18.85**	**83.85**	**17.58**	**3.08**
C0353-059-3750-M	**0.353**	**8.97**	**0.059**	**1.50**	**3.750**	**95.25**	**2.489**	**63.23**	**2.380**	**60.45**	**23.73**	**105.55**	**18.82**	**3.29**	**C0353-059-3750-S**	**2.598**	**65.99**	**18.85**	**83.85**	**16.37**	**2.86**
C0353-059-4000-M	**0.353**	**8.97**	**0.059**	**1.50**	**4.000**	**101.60**	**2.652**	**67.37**	**2.535**	**64.40**	**23.73**	**105.55**	**17.61**	**3.08**	**C0353-059-4000-S**	**2.769**	**70.33**	**18.85**	**83.85**	**15.31**	**2.68**
C0353-059-4250-M	**0.353**	**8.97**	**0.059**	**1.50**	**4.250**	**107.95**	**2.816**	**71.52**	**2.691**	**68.34**	**23.73**	**105.55**	**16.54**	**2.90**	**C0353-059-4250-S**	**2.940**	**74.67**	**18.85**	**83.85**	**14.39**	**2.52**
C0353-059-4500-M	**0.353**	**8.97**	**0.059**	**1.50**	**4.500**	**114.30**	**2.979**	**75.66**	**2.846**	**72.29**	**23.73**	**105.55**	**15.60**	**2.73**	**C0353-059-4500-S**	**3.110**	**79.00**	**18.85**	**83.85**	**13.57**	**2.37**
C0353-059-4750-M	**0.353**	**8.97**	**0.059**	**1.50**	**4.750**	**120.65**	**3.142**	**79.81**	**3.001**	**76.23**	**23.73**	**105.55**	**14.76**	**2.58**	**C0353-059-4750-S**	**3.281**	**83.34**	**18.85**	**83.85**	**12.83**	**2.25**
C0353-059-5000-M	**0.353**	**8.97**	**0.059**	**1.50**	**5.000**	**127.00**	**3.305**	**83.95**	**3.157**	**80.18**	**23.73**	**105.55**	**14.00**	**2.45**	**C0353-059-5000-S**	**3.452**	**87.68**	**18.85**	**83.85**	**12.18**	**2.13**
C0353-059-5250-M	**0.353**	**8.97**	**0.059**	**1.50**	**5.250**	**133.35**	**3.469**	**88.10**	**3.312**	**84.12**	**23.73**	**105.55**	**13.32**	**2.33**	**C0353-059-5250-S**	**3.623**	**92.01**	**18.85**	**83.85**	**11.58**	**2.03**
C0353-059-5500-M	**0.353**	**8.97**	**0.059**	**1.50**	**5.500**	**139.70**	**3.632**	**92.25**	**3.467**	**88.07**	**23.73**	**105.55**	**12.70**	**2.22**	**C0353-059-5500-S**	**3.793**	**96.35**	**18.85**	**83.85**	**11.05**	**1.93**
C0353-059-5750-M	**0.353**	**8.97**	**0.059**	**1.50**	**5.750**	**146.05**	**3.795**	**96.39**	**3.622**	**92.01**	**23.73**	**105.55**	**12.14**	**2.12**	**C0353-059-5750-S**	**3.964**	**100.68**	**18.85**	**83.85**	**10.55**	**1.85**
C0353-063-0563-M	**0.353**	**8.97**	**0.063**	**1.60**	**0.563**	**14.29**	**0.428**	**10.87**	**0.424**	**10.78**	**28.32**	**125.96**	**210.33**	**36.81**	**C0353-063-0563-S**	**0.440**	**11.17**	**22.46**	**99.93**	**182.89**	**32.01**
C0353-063-0625-M	**0.353**	**8.97**	**0.063**	**1.60**	**0.625**	**15.88**	**0.471**	**11.97**	**0.466**	**11.84**	**28.32**	**125.96**	**183.98**	**32.20**	**C0353-063-0625-S**	**0.485**	**12.31**	**22.46**	**99.93**	**159.99**	**28.00**
C0353-063-0688-M	**0.353**	**8.97**	**0.063**	**1.60**	**0.688**	**17.46**	**0.514**	**13.06**	**0.508**	**12.90**	**28.32**	**125.96**	**163.50**	**28.61**	**C0353-063-0688-S**	**0.529**	**13.45**	**22.46**	**99.93**	**142.18**	**24.88**
C0353-063-0750-M	**0.353**	**8.97**	**0.063**	**1.60**	**0.750**	**19.05**	**0.558**	**14.16**	**0.550**	**13.96**	**28.32**	**125.96**	**147.13**	**25.75**	**C0353-063-0750-S**	**0.574**	**14.59**	**22.46**	**99.93**	**127.94**	**22.39**
C0353-063-0813-M	**0.353**	**8.97**	**0.063**	**1.60**	**0.813**	**20.64**	**0.601**	**15.26**	**0.592**	**15.03**	**28.32**	**125.96**	**133.73**	**23.40**	**C0353-063-0813-S**	**0.619**	**15.73**	**22.46**	**99.93**	**116.29**	**20.35**
C0353-063-0875-M	**0.353**	**8.97**	**0.063**	**1.60**	**0.875**	**22.23**	**0.644**	**16.36**	**0.633**	**16.09**	**28.32**	**125.96**	**122.57**	**21.45**	**C0353-063-0875-S**	**0.664**	**16.87**	**22.46**	**99.93**	**106.59**	**18.65**
C0353-063-0938-M	**0.353**	**8.97**	**0.063**	**1.60**	**0.938**	**23.81**	**0.687**	**17.46**	**0.675**	**17.15**	**28.32**	**125.96**	**113.13**	**19.80**	**C0353-063-0938-S**	**0.709**	**18.01**	**22.46**	**99.93**	**98.38**	**17.22**
C0353-063-1000-M	**0.353**	**8.97**	**0.063**	**1.60**	**1.000**	**25.40**	**0.730**	**18.55**	**0.717**	**18.21**	**28.32**	**125.96**	**105.04**	**18.38**	**C0353-063-1000-S**	**0.754**	**19.15**	**22.46**	**99.93**	**91.34**	**15.98**
C0353-063-1125-M	**0.353**	**8.97**	**0.063**	**1.60**	**1.125**	**28.58**	**0.817**	**20.75**	**0.801**	**20.34**	**28.32**	**125.96**	**91.90**	**16.08**	**C0353-063-1125-S**	**0.844**	**21.43**	**22.46**	**99.93**	**79.91**	**13.98**
C0353-063-1250-M	**0.353**	**8.97**	**0.063**	**1.60**	**1.250**	**31.75**	**0.903**	**22.94**	**0.884**	**22.46**	**28.32**	**125.96**	**81.68**	**14.29**	**C0353-063-1250-S**	**0.934**	**23.72**	**22.46**	**99.93**	**71.03**	**12.43**
C0353-063-1375-M	**0.353**	**8.97**	**0.063**	**1.60**	**1.375**	**34.93**	**0.990**	**25.14**	**0.968**	**24.58**	**28.32**	**125.96**	**73.51**	**12.86**	**C0353-063-1375-S**	**1.024**	**26.00**	**22.46**	**99.93**	**63.92**	**11.19**
C0353-063-1500-M	**0.353**	**8.97**	**0.063**	**1.60**	**1.500**	**38.10**	**1.076**	**27.34**	**1.052**	**26.71**	**28.32**	**125.96**	**66.82**	**11.69**	**C0353-063-1500-S**	**1.113**	**28.28**	**22.46**	**99.93**	**58.10**	**10.17**
C0353-063-1625-M	**0.353**	**8.97**	**0.063**	**1.60**	**1.625**	**41.28**	**1.163**	**29.53**	**1.135**	**28.83**	**28.32**	**125.96**	**61.25**	**10.72**	**C0353-063-1625-S**	**1.203**	**30.56**	**22.46**	**99.93**	**53.26**	**9.32**
C0353-063-1750-M	**0.353**	**8.97**	**0.063**	**1.60**	**1.750**	**44.45**	**1.249**	**31.73**	**1.219**	**30.96**	**28.32**	**125.96**	**56.53**	**9.89**	**C0353-063-1750-S**	**1.293**	**32.84**	**22.46**	**99.93**	**49.16**	**8.60**
C0353-063-1875-M	**0.353**	**8.97**	**0.063**	**1.60**	**1.875**	**47.63**	**1.336**	**33.92**	**1.302**	**33.08**	**28.32**	**125.96**	**52.49**	**9.19**	**C0353-063-1875-S**	**1.383**	**35.12**	**22.46**	**99.93**	**45.65**	**7.99**

FOR INFORMATION ON ALTERNATIVE FINISHES, SEE PAGE 311

Part Numbers with an "*" are squared and not ground. **Part Numbers in bold** represent the newly expanded Associated Spring RAYMOND compression spring offering.

MUSIC WIRE															STAINLESS STEEL					
Catalog #	Outside Diameter (OD)		Wire Diameter (d)		Free Length (L) Approx		Load Length (L_1)		Solid Height (Sh) Approx		Load (P) at L_1		Spring Rate (R)		Catalog #	Load Length (L_1)		Load (P) at L_1		Spring Rate (R)	
	in	mm	in	mm	in	mm	in	mm	in	mm	lb	N	lb/in	N/mm		in	mm	lb	N	lb/in	N/mm
C0353-063-2000-M	**0.353**	**8.97**	**0.063**	**1.60**	**2.000**	**50.80**	**1.422**	**36.12**	**1.386**	**35.20**	**28.32**	**125.96**	**48.99**	**8.57**	**C0353-063-2000-S**	**1.473**	**37.41**	**22.46**	**99.93**	**42.60**	**7.46**
C0353-063-2125-M	**0.353**	**8.97**	**0.063**	**1.60**	**2.125**	**53.98**	**1.508**	**38.31**	**1.470**	**37.33**	**28.32**	**125.96**	**45.93**	**8.04**	**C0353-063-2125-S**	**1.562**	**39.69**	**22.46**	**99.93**	**39.94**	**6.99**
C0353-063-2250-M	**0.353**	**8.97**	**0.063**	**1.60**	**2.250**	**57.15**	**1.595**	**40.51**	**1.553**	**39.45**	**28.32**	**125.96**	**43.22**	**7.56**	**C0353-063-2250-S**	**1.652**	**41.97**	**22.46**	**99.93**	**37.59**	**6.58**
C0353-063-2375-M	**0.353**	**8.97**	**0.063**	**1.60**	**2.375**	**60.33**	**1.681**	**42.71**	**1.637**	**41.58**	**28.32**	**125.96**	**40.82**	**7.14**	**C0353-063-2375-S**	**1.742**	**44.25**	**22.46**	**99.93**	**35.50**	**6.21**
C0353-063-2500-M	**0.353**	**8.97**	**0.063**	**1.60**	**2.500**	**63.50**	**1.768**	**44.90**	**1.721**	**43.70**	**28.32**	**125.96**	**38.67**	**6.77**	**C0353-063-2500-S**	**1.832**	**46.53**	**22.46**	**99.93**	**33.63**	**5.88**
C0353-063-2625-M	**0.353**	**8.97**	**0.063**	**1.60**	**2.625**	**66.68**	**1.854**	**47.10**	**1.804**	**45.83**	**28.32**	**125.96**	**36.74**	**6.43**	**C0353-063-2625-S**	**1.922**	**48.81**	**22.46**	**99.93**	**31.95**	**5.59**
C0353-063-2750-M	**0.353**	**8.97**	**0.063**	**1.60**	**2.750**	**69.85**	**1.941**	**49.29**	**1.888**	**47.95**	**28.32**	**125.96**	**34.99**	**6.12**	**C0353-063-2750-S**	**2.012**	**51.09**	**22.46**	**99.93**	**30.42**	**5.32**
C0353-063-2875-M	**0.353**	**8.97**	**0.063**	**1.60**	**2.875**	**73.03**	**2.027**	**51.49**	**1.971**	**50.07**	**28.32**	**125.96**	**33.40**	**5.84**	**C0353-063-2875-S**	**2.101**	**53.38**	**22.46**	**99.93**	**29.04**	**5.08**
C0353-063-3000-M	**0.353**	**8.97**	**0.063**	**1.60**	**3.000**	**76.20**	**2.114**	**53.69**	**2.055**	**52.20**	**28.32**	**125.96**	**31.94**	**5.59**	**C0353-063-3000-S**	**2.191**	**55.66**	**22.46**	**99.93**	**27.78**	**4.86**
C0353-063-3250-M	**0.353**	**8.97**	**0.063**	**1.60**	**3.250**	**82.55**	**2.286**	**58.08**	**2.222**	**56.45**	**28.32**	**125.96**	**29.39**	**5.14**	**C0353-063-3250-S**	**2.371**	**60.22**	**22.46**	**99.93**	**25.56**	**4.47**
C0353-063-3500-M	**0.353**	**8.97**	**0.063**	**1.60**	**3.500**	**88.90**	**2.459**	**62.47**	**2.390**	**60.69**	**28.32**	**125.96**	**27.21**	**4.76**	**C0353-063-3500-S**	**2.551**	**64.78**	**22.46**	**99.93**	**23.66**	**4.14**
C0353-063-3750-M	**0.353**	**8.97**	**0.063**	**1.60**	**3.750**	**95.25**	**2.632**	**66.86**	**2.557**	**64.94**	**28.32**	**125.96**	**25.33**	**4.43**	**C0353-063-3750-S**	**2.730**	**69.35**	**22.46**	**99.93**	**22.03**	**3.86**
C0353-063-4000-M	**0.353**	**8.97**	**0.063**	**1.60**	**4.000**	**101.60**	**2.805**	**71.25**	**2.724**	**69.19**	**28.32**	**125.96**	**23.70**	**4.15**	**C0353-063-4000-S**	**2.910**	**73.91**	**22.46**	**99.93**	**20.61**	**3.61**
C0353-063-4250-M	**0.353**	**8.97**	**0.063**	**1.60**	**4.250**	**107.95**	**2.978**	**75.64**	**2.891**	**73.44**	**28.32**	**125.96**	**22.26**	**3.90**	**C0353-063-4250-S**	**3.090**	**78.47**	**22.46**	**99.93**	**19.36**	**3.39**
C0353-063-4500-M	**0.353**	**8.97**	**0.063**	**1.60**	**4.500**	**114.30**	**3.151**	**80.03**	**3.059**	**77.69**	**28.32**	**125.96**	**20.99**	**3.67**	**C0353-063-4500-S**	**3.269**	**83.04**	**22.46**	**99.93**	**18.25**	**3.19**
C0353-063-4750-M	**0.353**	**8.97**	**0.063**	**1.60**	**4.750**	**120.65**	**3.324**	**84.43**	**3.226**	**81.93**	**28.32**	**125.96**	**19.86**	**3.47**	**C0353-063-4750-S**	**3.449**	**87.60**	**22.46**	**99.93**	**17.27**	**3.02**
C0353-063-5000-M	**0.353**	**8.97**	**0.063**	**1.60**	**5.000**	**127.00**	**3.497**	**88.82**	**3.393**	**86.18**	**28.32**	**125.96**	**18.84**	**3.30**	**C0353-063-5000-S**	**3.628**	**92.16**	**22.46**	**99.93**	**16.38**	**2.87**
C0353-063-5250-M	**0.353**	**8.97**	**0.063**	**1.60**	**5.250**	**133.35**	**3.670**	**93.21**	**3.560**	**90.43**	**28.32**	**125.96**	**17.92**	**3.14**	**C0353-063-5250-S**	**3.808**	**96.73**	**22.46**	**99.93**	**15.58**	**2.73**
C0353-063-5500-M	**0.353**	**8.97**	**0.063**	**1.60**	**5.500**	**139.70**	**3.843**	**97.60**	**3.728**	**94.68**	**28.32**	**125.96**	**17.08**	**2.99**	**C0353-063-5500-S**	**3.988**	**101.29**	**22.46**	**99.93**	**14.86**	**2.60**
C0353-063-5750-M	**0.353**	**8.97**	**0.063**	**1.60**	**5.750**	**146.05**	**4.015**	**101.99**	**3.895**	**98.93**	**28.32**	**125.96**	**16.32**	**2.86**	**C0353-063-5750-S**	**4.167**	**105.85**	**22.46**	**99.93**	**14.20**	**2.48**
C0353-068-0563-M	**0.353**	**8.97**	**0.068**	**1.73**	**0.563**	**14.29**	**0.468**	**11.88**	**0.451**	**11.46**	**29.11**	**129.50**	**307.48**	**53.81**	**C0353-068-0563-S**	**0.460**	**11.68**	**27.50**	**122.31**	**267.37**	**46.79**
C0353-068-0625-M	**0.353**	**8.97**	**0.068**	**1.73**	**0.625**	**15.88**	**0.516**	**13.10**	**0.496**	**12.61**	**29.34**	**130.51**	**268.18**	**46.93**	**C0353-068-0625-S**	**0.507**	**12.88**	**27.50**	**122.31**	**233.20**	**40.81**
C0353-068-0688-M	**0.353**	**8.97**	**0.068**	**1.73**	**0.688**	**17.46**	**0.563**	**14.31**	**0.541**	**13.75**	**29.52**	**131.29**	**237.79**	**41.61**	**C0353-068-0688-S**	**0.555**	**14.08**	**27.50**	**122.31**	**206.77**	**36.19**
C0353-068-0750-M	**0.353**	**8.97**	**0.068**	**1.73**	**0.750**	**19.05**	**0.587**	**14.92**	**0.587**	**14.90**	**34.73**	**154.47**	**213.58**	**37.38**	**C0353-068-0750-S**	**0.602**	**15.29**	**27.50**	**122.31**	**185.73**	**32.50**
C0353-068-0813-M	**0.353**	**8.97**	**0.068**	**1.73**	**0.813**	**20.64**	**0.633**	**16.09**	**0.632**	**16.05**	**34.73**	**154.47**	**193.85**	**33.92**	**C0353-068-0813-S**	**0.649**	**16.49**	**27.50**	**122.31**	**168.57**	**29.50**
C0353-068-0875-M	**0.353**	**8.97**	**0.068**	**1.73**	**0.875**	**22.23**	**0.679**	**17.25**	**0.677**	**17.20**	**34.73**	**154.47**	**177.46**	**31.05**	**C0353-068-0875-S**	**0.697**	**17.70**	**27.50**	**122.31**	**154.31**	**27.00**
C0353-068-0938-M	**0.353**	**8.97**	**0.068**	**1.73**	**0.938**	**23.81**	**0.725**	**18.42**	**0.722**	**18.34**	**34.73**	**154.47**	**163.62**	**28.63**	**C0353-068-0938-S**	**0.744**	**18.90**	**27.50**	**122.31**	**142.28**	**24.90**
C0353-068-1000-M	**0.353**	**8.97**	**0.068**	**1.73**	**1.000**	**25.40**	**0.771**	**19.59**	**0.767**	**19.49**	**34.73**	**154.47**	**151.78**	**26.56**	**C0353-068-1000-S**	**0.792**	**20.11**	**27.50**	**122.31**	**131.99**	**23.10**
C0353-068-1125-M	**0.353**	**8.97**	**0.068**	**1.73**	**1.125**	**28.58**	**0.863**	**21.92**	**0.858**	**21.79**	**34.73**	**154.47**	**132.60**	**23.20**	**C0353-068-1125-S**	**0.887**	**22.52**	**27.50**	**122.31**	**115.30**	**20.18**
C0353-068-1250-M	**0.353**	**8.97**	**0.068**	**1.73**	**1.250**	**31.75**	**0.955**	**24.26**	**0.948**	**24.08**	**34.73**	**154.47**	**117.72**	**20.60**	**C0353-068-1250-S**	**0.981**	**24.93**	**27.50**	**122.31**	**102.37**	**17.91**
C0353-068-1375-M	**0.353**	**8.97**	**0.068**	**1.73**	**1.375**	**34.93**	**1.047**	**26.59**	**1.038**	**26.38**	**34.73**	**154.47**	**105.84**	**18.52**	**C0353-068-1375-S**	**1.076**	**27.34**	**27.50**	**122.31**	**92.04**	**16.11**
C0353-068-1500-M	**0.353**	**8.97**	**0.068**	**1.73**	**1.500**	**38.10**	**1.139**	**28.93**	**1.129**	**28.67**	**34.73**	**154.47**	**96.14**	**16.83**	**C0353-068-1500-S**	**1.171**	**29.75**	**27.50**	**122.31**	**83.60**	**14.63**
C0353-068-1625-M	**0.353**	**8.97**	**0.068**	**1.73**	**1.625**	**41.28**	**1.231**	**31.26**	**1.219**	**30.97**	**34.73**	**154.47**	**88.07**	**15.41**	**C0353-068-1625-S**	**1.266**	**32.16**	**27.50**	**122.31**	**76.59**	**13.40**
C0353-068-1750-M	**0.353**	**8.97**	**0.068**	**1.73**	**1.750**	**44.45**	**1.323**	**33.59**	**1.310**	**33.26**	**34.73**	**154.47**	**81.25**	**14.22**	**C0353-068-1750-S**	**1.361**	**34.56**	**27.50**	**122.31**	**70.65**	**12.36**
C0353-068-1875-M	**0.353**	**8.97**	**0.068**	**1.73**	**1.875**	**47.63**	**1.415**	**35.93**	**1.400**	**35.56**	**34.73**	**154.47**	**75.41**	**13.20**	**C0353-068-1875-S**	**1.456**	**36.97**	**27.50**	**122.31**	**65.58**	**11.48**
C0353-068-2000-M	**0.353**	**8.97**	**0.068**	**1.73**	**2.000**	**50.80**	**1.506**	**38.26**	**1.490**	**37.85**	**34.73**	**154.47**	**70.35**	**12.31**	**C0353-068-2000-S**	**1.551**	**39.38**	**27.50**	**122.31**	**61.18**	**10.71**
C0353-068-2125-M	**0.353**	**8.97**	**0.068**	**1.73**	**2.125**	**53.98**	**1.598**	**40.60**	**1.581**	**40.15**	**34.73**	**154.47**	**65.93**	**11.54**	**C0353-068-2125-S**	**1.645**	**41.79**	**27.50**	**122.31**	**57.33**	**10.03**
C0353-068-2250-M	**0.353**	**8.97**	**0.068**	**1.73**	**2.250**	**57.15**	**1.690**	**42.93**	**1.671**	**42.44**	**34.73**	**154.47**	**62.03**	**10.86**	**C0353-068-2250-S**	**1.740**	**44.20**	**27.50**	**122.31**	**53.94**	**9.44**
C0353-068-2375-M	**0.353**	**8.97**	**0.068**	**1.73**	**2.375**	**60.33**	**1.782**	**45.27**	**1.761**	**44.74**	**34.73**	**154.47**	**58.57**	**10.25**	**C0353-068-2375-S**	**1.835**	**46.61**	**27.50**	**122.31**	**50.93**	**8.91**
C0353-068-2500-M	**0.353**	**8.97**	**0.068**	**1.73**	**2.500**	**63.50**	**1.874**	**47.60**	**1.852**	**47.03**	**34.73**	**154.47**	**55.47**	**9.71**	**C0353-068-2500-S**	**1.930**	**49.02**	**27.50**	**122.31**	**48.24**	**8.44**
C0353-068-2625-M	**0.353**	**8.97**	**0.068**	**1.73**	**2.625**	**66.68**	**1.966**	**49.93**	**1.942**	**49.33**	**34.73**	**154.47**	**52.69**	**9.22**	**C0353-068-2625-S**	**2.025**	**51.43**	**27.50**	**122.31**	**45.82**	**8.02**
C0353-068-2750-M	**0.353**	**8.97**	**0.068**	**1.73**	**2.750**	**69.85**	**2.058**	**52.27**	**2.032**	**51.62**	**34.73**	**154.47**	**50.17**	**8.78**	**C0353-068-2750-S**	**2.120**	**53.84**	**27.50**	**122.31**	**43.63**	**7.63**
C0353-068-2875-M	**0.353**	**8.97**	**0.068**	**1.73**	**2.875**	**73.03**	**2.150**	**54.60**	**2.123**	**53.92**	**34.73**	**154.47**	**47.88**	**8.38**	**C0353-068-2875-S**	**2.215**	**56.25**	**27.50**	**122.31**	**41.63**	**7.29**
C0353-068-3000-M	**0.353**	**8.97**	**0.068**	**1.73**	**3.000**	**76.20**	**2.242**	**56.94**	**2.213**	**56.21**	**34.73**	**154.47**	**45.79**	**8.01**	**C0353-068-3000-S**	**2.309**	**58.66**	**27.50**	**122.31**	**39.82**	**6.97**
C0353-068-3250-M	**0.353**	**8.97**	**0.068**	**1.73**	**3.250**	**82.55**	**2.425**	**61.61**	**2.394**	**60.80**	**34.73**	**154.47**	**42.11**	**7.37**	**C0353-068-3250-S**	**2.499**	**63.48**	**27.50**	**122.31**	**36.62**	**6.41**
C0353-068-3500-M	**0.353**	**8.97**	**0.068**	**1.73**	**3.500**	**88.90**	**2.609**	**66.27**	**2.575**	**65.39**	**34.73**	**154.47**	**38.98**	**6.82**	**C0353-068-3500-S**	**2.689**	**68.30**	**27.50**	**122.31**	**33.90**	**5.93**
C0353-068-3750-M	**0.353**	**8.97**	**0.068**	**1.73**	**3.750**	**95.25**	**2.793**	**70.94**	**2.755**	**69.99**	**34.73**	**154.47**	**36.29**	**6.35**	**C0353-068-3750-S**	**2.879**	**73.12**	**27.50**	**122.31**	**31.55**	**5.52**
C0353-068-4000-M	**0.353**	**8.97**	**0.068**	**1.73**	**4.000**	**101.60**	**2.977**	**75.61**	**2.936**	**74.58**	**34.73**	**154.47**	**33.94**	**5.94**	**C0353-068-4000-S**	**3.068**	**77.93**	**27.50**	**122.31**	**29.51**	**5.16**
C0353-068-4250-M	**0.353**	**8.97**	**0.068**	**1.73**	**4.250**	**107.95**	**3.161**	**80.28**	**3.117**	**79.17**	**34.73**	**154.47**	**31.88**	**5.58**	**C0353-068-4250-S**	**3.258**	**82.75**	**27.50**	**122.31**	**27.72**	**4.85**
C0353-068-4500-M	**0.353**	**8.97**	**0.068**	**1.73**	**4.500**	**114.30**	**3.344**	**84.95**	**3.297**	**83.76**	**34.73**	**154.47**	**30.05**	**5.26**	**C0353-068-4500-S**	**3.448**	**87.57**	**27.50**	**122.31**	**26.13**	**4.57**
C0353-068-4750-M	**0.353**	**8.97**	**0.068**	**1.73**	**4.750**	**120.65**	**3.528**	**89.62**	**3.478**	**88.35**	**34.73**	**154.47**	**28.42**	**4.97**	**C0353-068-4750-S**	**3.637**	**92.39**	**27.50**	**122.31**	**24.72**	**4.33**
C0353-068-5000-M	**0.353**	**8.97**	**0.068**	**1.73**	**5.000**	**127.00**	**3.712**	**94.28**	**3.659**	**92.94**	**34.73**	**154.47**	**26.96**	**4.72**	**C0353-068-5000-S**	**3.827**	**97.21**	**27.50**	**122.31**	**23.45**	**4.10**
C0353-068-5250-M	**0.353**	**8.97**	**0.068**	**1.73**	**5.250**	**133.35**	**3.896**	**98.95**	**3.840**	**97.53**	**34.73**	**154.47**	**25.64**	**4.49**	**C0353-068-5250-S**	**4.017**	**102.03**	**27.50**	**122.31**	**22.30**	**3.90**
C0353-068-5500-M	**0.353**	**8.97**	**0.068**	**1.73**	**5.500**	**139.70**	**4.080**	**103.62**	**4.020**	**102.12**	**34.73**	**154.47**	**24.45**	**4.28**	**C0353-068-5500-S**	**4.207**	**106.85**	**27.50**	**122.31**	**21.26**	**3.72**
D11950	0.354	9.00	0.039	1.00	0.512	13.00	0.287	7.30	0.217	5.50	7.45	33.15	32.46	5.68	D21950	0.287	7.30	6.21	27.61	27.03	4.73
D11960	0.354	9.00	0.039	1.00	0.748	19.00	0.398	10.10	0.295	7.50	7.45	33.15	20.63	3.61	D21960	0.398	10.10	6.21	27.61	17.20	3.01
D11970	0.354	9.00	0.039	1.00	1.122	28.50	0.563	14.30	0.413	10.50	7.45	33.15	13.31	2.33	D21970	0.563	14.30	6.21	27.61	11.09	1.94
D11980	0.354	9.00	0.039	1.00	1.594	40.50	0.783	19.90	0.571	14.50	7.45	33.15	9.09	1.59	D21980	0.783	19.90	6.21	27.61	7.54	1.32
D11990	0.354	9.00	0.039	1.00	2.323	59.00	1.114	28.30	0.807	20.50	7.45	33.15	6.17	1.08	D21990	1.114	28.30	6.21	27.61	5.14	0.90
C0360-026-0500-M	0.360	9.14	0.026	0.66	0.500	12.70	0.215	5.46	0.117	2.97	2.62	11.65	9.20	1.61	C0360-026-0500-S	0.290	7.36	1.61	7.17	7.66	1.34
C0360-026-0560-M	0.360	9.14	0.026	0.66	0.560	14.22	0.239	6.07	0.123	3.12	2.62	11.65	8.20	1.44	C0360-026-0560-S	0.324	8.23	1.61	7.17	6.83	1.20
C0360-026-0620-M	0.360	9.14	0.026	0.66	0.620	15.75	0.264	6.71	0.129	3.28	2.62	11.65	7.40	1.30	C0360-026-0620-S	0.358	9.10	1.61	7.17	6.16	1.08
C0360-026-0690-M	0.360	9.14	0.026	0.66	0.690	17.53	0.298	7.57	0.136	3.45	2.62	11.65	6.70	1.17	C0360-026-0690-S	0.401	10.19	1.61	7.17	5.58	0.98
C0360-026-0750-M	0.360	9.14	0.026	0.66	0.750	19.05	0.323	8.20	0.143	3.63	2.62	11.65	6.10	1.07	C0360-026-0750-S	0.433	10.99	1.61	7.17	5.08	0.89

Part Numbers with an "*" are squared and not ground. **Part Numbers in bold** represent the newly expanded Associated Spring RAYMOND compression spring offering.

MUSIC WIRE															STAINLESS STEEL					
Catalog #	Outside Diameter (OD)		Wire Diameter (d)		Free Length (L) Approx		Load Length (L_1)		Solid Height (Sh) Approx		Load (P) at L_1		Spring Rate (R)		Catalog #	Load Length (L_1)		Load (P) at L_1		Spring Rate (R)	
	in	mm	in	mm	in	mm	in	mm	in	mm	lb	N	lb/in	N/mm		in	mm	lb	N	lb/in	N/mm
C0360-026-0810-M	0.360	9.14	0.026	0.66	0.810	20.57	0.347	8.81	0.148	3.76	2.62	11.65	5.70	1.00	C0360-026-0810-S	0.470	11.95	1.61	7.17	4.75	0.83
C0360-026-0880-M	0.360	9.14	0.026	0.66	0.880	22.35	0.346	8.79	0.162	4.11	2.62	11.65	4.90	0.86	C0360-026-0880-S	0.485	12.32	1.61	7.17	4.08	0.71
C0360-026-0940-M	0.360	9.14	0.026	0.66	0.940	23.88	0.370	9.40	0.169	4.29	2.62	11.65	4.60	0.81	C0360-026-0940-S	0.519	13.19	1.61	7.17	3.83	0.67
C0360-026-1000-M	0.360	9.14	0.026	0.66	1.000	25.40	0.359	9.12	0.181	4.60	2.62	11.65	4.10	0.72	C0360-026-1000-S	0.528	13.41	1.61	7.17	3.42	0.60
C0360-026-1120-M	0.360	9.14	0.026	0.66	1.120	28.45	0.443	11.25	0.187	4.75	2.62	11.65	3.90	0.68	C0360-026-1120-S	0.624	15.84	1.61	7.17	3.25	0.57
C0360-026-1250-M	0.360	9.14	0.026	0.66	1.250	31.75	0.479	12.17	0.213	5.41	2.62	11.65	3.40	0.60	C0360-026-1250-S	0.681	17.29	1.61	7.17	2.83	0.50
C0360-026-1500-M	0.360	9.14	0.026	0.66	1.500	38.10	0.564	14.33	0.242	6.15	2.62	11.65	2.80	0.49	C0360-026-1500-S	0.809	20.54	1.61	7.17	2.33	0.41
C0360-026-1750-M	0.360	9.14	0.026	0.66	1.750	44.45	0.652	16.56	0.270	6.86	2.62	11.65	2.40	0.42	C0360-026-1750-S	0.943	23.96	1.61	7.17	2.00	0.35
C0360-026-2000-M	0.360	9.14	0.026	0.66	2.000	50.80	0.834	21.18	0.298	7.57	2.62	11.65	2.10	0.37	C0360-026-2000-S	1.078	27.39	1.61	7.17	1.75	0.31
C0360-029-0500-M	0.360	9.14	0.029	0.74	0.500	12.70	0.238	6.05	0.150	3.81	3.38	15.03	12.90	2.26	C0360-029-0500-S	0.296	7.51	2.20	9.77	10.75	1.88
C0360-029-0560-M	0.360	9.14	0.029	0.74	0.560	14.22	0.263	6.68	0.159	4.04	3.38	15.03	11.40	2.00	C0360-029-0560-S	0.329	8.35	2.20	9.77	9.50	1.66
C0360-029-0620-M	0.360	9.14	0.029	0.74	0.620	15.75	0.287	7.29	0.167	4.24	3.38	15.03	10.20	1.79	C0360-029-0620-S	0.361	9.18	2.20	9.77	8.50	1.49
C0360-029-0690-M	0.360	9.14	0.029	0.74	0.690	17.53	0.316	8.03	0.177	4.50	3.38	15.03	9.00	1.58	C0360-029-0690-S	0.397	10.08	2.20	9.77	7.50	1.31
C0360-029-0750-M	0.360	9.14	0.029	0.74	0.750	19.05	0.341	8.66	0.186	4.72	3.38	15.03	8.20	1.44	C0360-029-0750-S	0.428	10.88	2.20	9.77	6.83	1.20
C0360-029-0810-M	0.360	9.14	0.029	0.74	0.810	20.57	0.365	9.27	0.194	4.93	3.38	15.03	7.60	1.33	C0360-029-0810-S	0.463	11.76	2.20	9.77	6.33	1.11
C0360-029-0880-M	0.360	9.14	0.029	0.74	0.880	22.35	0.394	10.01	0.204	5.18	3.38	15.03	6.90	1.21	C0360-029-0880-S	0.498	12.64	2.20	9.77	5.75	1.01
C0360-029-0940-M	0.360	9.14	0.029	0.74	0.940	23.88	0.418	10.62	0.213	5.41	3.38	15.03	6.50	1.14	C0360-029-0940-S	0.534	13.57	2.20	9.77	5.42	0.95
C0360-029-1000-M	0.360	9.14	0.029	0.74	1.000	25.40	0.443	11.25	0.221	5.61	3.38	15.03	6.10	1.07	C0360-029-1000-S	0.568	14.42	2.20	9.77	5.08	0.89
C0360-029-1120-M	0.360	9.14	0.029	0.74	1.120	28.45	0.492	12.50	0.238	6.05	3.38	15.03	5.40	0.95	C0360-029-1120-S	0.632	16.04	2.20	9.77	4.50	0.79
C0360-029-1250-M	0.360	9.14	0.029	0.74	1.250	31.75	0.545	13.84	0.257	6.53	3.38	15.03	4.80	0.84	C0360-029-1250-S	0.700	17.79	2.20	9.77	4.00	0.70
C0360-029-1380-M	0.360	9.14	0.029	0.74	1.380	35.05	0.598	15.19	0.275	6.99	3.38	15.03	4.30	0.75	C0360-029-1380-S	0.767	19.47	2.20	9.77	3.58	0.63
C0360-029-1500-M	0.360	9.14	0.029	0.74	1.500	38.10	0.647	16.43	0.292	7.42	3.38	15.03	4.00	0.70	C0360-029-1500-S	0.841	21.35	2.20	9.77	3.33	0.58
C0360-029-1750-M	0.360	9.14	0.029	0.74	1.750	44.45	0.749	19.02	0.328	8.33	3.38	15.03	3.40	0.60	C0360-029-1750-S	0.974	24.74	2.20	9.77	2.83	0.50
C0360-029-2000-M	0.360	9.14	0.029	0.74	2.000	50.80	0.834	21.18	0.364	9.25	3.38	15.03	2.90	0.51	C0360-029-2000-S	1.090	27.70	2.20	9.77	2.42	0.42
C0360-032-0380-M	0.360	9.14	0.032	0.81	0.380	9.65	0.190	4.83	0.151	3.84	4.72	21.00	24.80	4.34	C0360-032-0380-S	0.239	6.08	2.91	12.94	20.66	3.62
C0360-032-0440-M	0.360	9.14	0.032	0.81	0.440	11.18	0.214	5.44	0.162	4.11	4.72	21.00	20.80	3.64	C0360-032-0440-S	0.272	6.91	2.91	12.94	17.33	3.03
C0360-032-0500-M	0.360	9.14	0.032	0.81	0.500	12.70	0.237	6.02	0.159	4.04	4.72	21.00	17.90	3.13	C0360-032-0500-S	0.305	7.75	2.91	12.94	14.91	2.61
C0360-032-0560-M	0.360	9.14	0.032	0.81	0.560	14.22	0.270	6.86	0.167	4.24	4.72	21.00	16.30	2.85	C0360-032-0560-S	0.346	8.78	2.91	12.94	13.58	2.38
C0360-032-0620-M	0.360	9.14	0.032	0.81	0.620	15.75	0.304	7.72	0.175	4.45	4.72	21.00	14.90	2.61	C0360-032-0620-S	0.386	9.80	2.91	12.94	12.41	2.17
C0360-032-0690-M	0.360	9.14	0.032	0.81	0.690	17.53	0.321	8.15	0.191	4.85	4.72	21.00	12.80	2.24	C0360-032-0690-S	0.417	10.60	2.91	12.94	10.66	1.87
C0360-032-0750-M	0.360	9.14	0.032	0.81	0.750	19.05	0.355	9.02	0.199	5.05	4.72	21.00	11.90	2.08	C0360-032-0750-S	0.457	11.60	2.91	12.94	9.91	1.73
C0360-032-0810-M	0.360	9.14	0.032	0.81	0.810	20.57	0.388	9.86	0.207	5.26	4.72	21.00	11.20	1.96	C0360-032-0810-S	0.498	12.66	2.91	12.94	9.33	1.63
C0360-032-0880-M	0.360	9.14	0.032	0.81	0.880	22.35	0.406	10.31	0.224	5.69	4.72	21.00	9.90	1.73	C0360-032-0880-S	0.527	13.39	2.91	12.94	8.25	1.44
C0360-032-0940-M	0.360	9.14	0.032	0.81	0.940	23.88	0.439	11.15	0.231	5.87	4.72	21.00	9.40	1.65	C0360-032-0940-S	0.569	14.44	2.91	12.94	7.83	1.37
C0360-032-1000-M	0.360	9.14	0.032	0.81	1.000	25.40	0.447	11.35	0.247	6.27	4.72	21.00	8.50	1.49	C0360-032-1000-S	0.589	14.97	2.91	12.94	7.08	1.24
C0360-032-1120-M	0.360	9.14	0.032	0.81	1.120	28.45	0.488	12.40	0.270	6.86	4.72	21.00	7.50	1.31	C0360-032-1120-S	0.654	16.62	2.91	12.94	6.25	1.09
C0360-032-1250-M	0.360	9.14	0.032	0.81	1.250	31.75	0.535	13.59	0.303	7.70	4.72	21.00	6.60	1.16	C0360-032-1250-S	0.721	18.31	2.91	12.94	5.50	0.96
C0360-032-1380-M	0.360	9.14	0.032	0.81	1.380	35.05	0.590	14.99	0.317	8.05	4.72	21.00	6.00	1.05	C0360-032-1380-S	0.798	20.27	2.91	12.94	5.00	0.87
C0360-032-1500-M	0.360	9.14	0.032	0.81	1.500	38.10	0.631	16.03	0.344	8.74	4.72	21.00	5.40	0.95	C0360-032-1500-S	0.853	21.68	2.91	12.94	4.50	0.79
C0360-032-1750-M	0.360	9.14	0.032	0.81	1.750	44.45	0.724	18.39	0.391	9.93	4.72	21.00	4.60	0.81	C0360-032-1750-S	0.991	25.17	2.91	12.94	3.83	0.67
C0360-032-2000-M	0.360	9.14	0.032	0.81	2.000	50.80	0.820	20.83	0.434	11.02	4.72	21.00	4.00	0.70	C0360-032-2000-S	1.127	28.63	2.91	12.94	3.33	0.58
C0360-032-2250-M	0.360	9.14	0.032	0.81	2.250	57.15	1.005	25.53	0.464	11.79	4.72	21.00	3.80	0.67	C0360-032-2250-S	1.331	33.81	2.91	12.94	3.17	0.55
C0360-032-2500-M	0.360	9.14	0.032	0.81	2.500	63.50	1.113	28.27	0.498	12.65	4.72	21.00	3.40	0.60	C0360-032-2500-S	1.473	37.41	2.91	12.94	2.83	0.50
C0360-035-0440-M	0.360	9.14	0.035	0.89	0.440	11.18	0.238	6.05	0.182	4.62	5.73	25.49	28.40	4.97	C0360-035-0440-S	0.281	7.14	3.76	16.73	23.66	4.14
C0360-035-0500-M	0.360	9.14	0.035	0.89	0.500	12.70	0.265	6.73	0.195	4.95	5.73	25.49	24.40	4.27	C0360-035-0500-S	0.315	8.00	3.76	16.73	20.33	3.56
C0360-035-0560-M	0.360	9.14	0.035	0.89	0.560	14.22	0.293	7.44	0.208	5.28	5.73	25.49	21.40	3.75	C0360-035-0560-S	0.349	8.86	3.76	16.73	17.83	3.12
C0360-035-0620-M	0.360	9.14	0.035	0.89	0.620	15.75	0.320	8.13	0.220	5.59	5.73	25.49	19.10	3.34	C0360-035-0620-S	0.384	9.74	3.76	16.73	15.91	2.78
C0360-035-0690-M	0.360	9.14	0.035	0.89	0.690	17.53	0.352	8.94	0.235	5.97	5.73	25.49	16.90	2.96	C0360-035-0690-S	0.423	10.74	3.76	16.73	14.08	2.46
C0360-035-0750-M	0.360	9.14	0.035	0.89	0.750	19.05	0.379	9.63	0.247	6.27	5.73	25.49	15.40	2.70	C0360-035-0750-S	0.457	11.60	3.76	16.73	12.83	2.24
C0360-035-0810-M	0.360	9.14	0.035	0.89	0.810	20.57	0.406	10.31	0.260	6.60	5.73	25.49	14.20	2.49	C0360-035-0810-S	0.492	12.50	3.76	16.73	11.83	2.07
C0360-035-0880-M	0.360	9.14	0.035	0.89	0.880	22.35	0.438	11.13	0.275	6.99	5.73	25.49	13.00	2.28	C0360-035-0880-S	0.533	13.53	3.76	16.73	10.83	1.90
C0360-035-0940-M	0.360	9.14	0.035	0.89	0.940	23.88	0.465	11.81	0.287	7.29	5.73	25.49	12.10	2.12	C0360-035-0940-S	0.567	14.40	3.76	16.73	10.08	1.76
C0360-035-1000-M	0.360	9.14	0.035	0.89	1.000	25.40	0.493	12.52	0.300	7.62	5.73	25.49	11.30	1.98	C0360-035-1000-S	0.600	15.25	3.76	16.73	9.41	1.65
C0360-035-1120-M	0.360	9.14	0.035	0.89	1.120	28.45	0.547	13.89	0.325	8.26	5.73	25.49	10.00	1.75	C0360-035-1120-S	0.668	16.98	3.76	16.73	8.33	1.46
C0360-035-1250-M	0.360	9.14	0.035	0.89	1.250	31.75	0.606	15.39	0.352	8.94	5.73	25.49	8.90	1.56	C0360-035-1250-S	0.743	18.86	3.76	16.73	7.41	1.30
C0360-035-1380-M	0.360	9.14	0.035	0.89	1.380	35.05	0.665	16.89	0.379	9.63	5.73	25.49	8.00	1.40	C0360-035-1380-S	0.815	20.71	3.76	16.73	6.66	1.17
C0360-035-1500-M	0.360	9.14	0.035	0.89	1.500	38.10	0.720	18.29	0.404	10.26	5.73	25.49	7.30	1.28	C0360-035-1500-S	0.881	22.39	3.76	16.73	6.08	1.06
C0360-035-1750-M	0.360	9.14	0.035	0.89	1.750	44.45	0.834	21.18	0.457	11.61	5.73	25.49	6.30	1.10	C0360-035-1750-S	1.033	26.24	3.76	16.73	5.25	0.92
C0360-035-2000-M	0.360	9.14	0.035	0.89	2.000	50.80	0.947	24.05	0.509	12.93	5.73	25.49	5.40	0.95	C0360-035-2000-S	1.164	29.56	3.76	16.73	4.50	0.79
C0360-035-2250-M	0.360	9.14	0.035	0.89	2.250	57.15	1.061	26.95	0.562	14.27	5.73	25.49	4.80	0.84	C0360-035-2250-S	1.309	33.25	3.76	16.73	4.00	0.70
C0360-035-2500-M	0.360	9.14	0.035	0.89	2.500	63.50	1.174	29.82	0.614	15.60	5.73	25.49	4.30	0.75	C0360-035-2500-S	1.450	36.82	3.76	16.73	3.58	0.63
C0360-038-0440-M	0.360	9.14	0.038	0.97	0.440	11.18	0.236	5.99	0.190	4.83	7.63	33.94	37.40	6.55	C0360-038-0440-S	0.289	7.34	4.71	20.94	31.15	5.45
C0360-038-0500-M	0.360	9.14	0.038	0.97	0.500	12.70	0.276	7.01	0.199	5.05	7.63	33.94	34.10	5.97	C0360-038-0500-S	0.334	8.49	4.71	20.94	28.41	4.97
C0360-038-0560-M	0.360	9.14	0.038	0.97	0.560	14.22	0.295	7.49	0.218	5.54	7.63	33.94	28.80	5.04	C0360-038-0560-S	0.364	9.24	4.71	20.94	23.99	4.20

FOR INFORMATION ON ALTERNATIVE FINISHES, SEE PAGE 311

Part Numbers with an "*" are squared and not ground. **Part Numbers in bold** represent the newly expanded Associated Spring RAYMOND compression spring offering.

MUSIC WIRE

Catalog #	Outside Diameter (OD)		Wire Diameter (d)		Free Length (L) Approx		Load Length (L_1)		Solid Height (Sh) Approx		Load (P) at L_1		Spring Rate (R)	
	in	mm	in	mm	in	mm	in	mm	in	mm	lb	N	lb/in	N/mm
C0360-038-0620-M	0.360	9.14	0.038	0.97	0.620	15.75	0.314	7.98	0.237	6.02	7.63	33.94	24.90	4.36
C0360-038-0690-M	0.360	9.14	0.038	0.97	0.690	17.53	0.344	8.74	0.256	6.50	7.63	33.94	22.10	3.87
C0360-038-0750-M	0.360	9.14	0.038	0.97	0.750	19.05	0.383	9.73	0.266	6.76	7.63	33.94	20.80	3.64
C0360-038-0810-M	0.360	9.14	0.038	0.97	0.810	20.57	0.403	10.24	0.285	7.24	7.63	33.94	18.70	3.27
C0360-038-0880-M	0.360	9.14	0.038	0.97	0.880	22.35	0.432	10.97	0.304	7.72	7.63	33.94	17.00	2.98
C0360-038-0940-M	0.360	9.14	0.038	0.97	0.940	23.88	0.451	11.46	0.323	8.20	7.63	33.94	15.60	2.73
C0360-038-1000-M	0.360	9.14	0.038	0.97	1.000	25.40	0.491	12.47	0.332	8.43	7.63	33.94	15.00	2.63
C0360-038-1120-M	0.360	9.14	0.038	0.97	1.120	28.45	0.529	13.44	0.370	9.40	7.63	33.94	12.90	2.26
C0360-038-1250-M	0.360	9.14	0.038	0.97	1.250	31.75	0.598	15.19	0.399	10.13	7.63	33.94	11.70	2.05
C0360-038-1380-M	0.360	9.14	0.038	0.97	1.380	35.05	0.647	16.43	0.437	11.10	7.63	33.94	10.40	1.82
C0360-038-1500-M	0.360	9.14	0.038	0.97	1.500	38.10	0.705	17.91	0.465	11.81	7.63	33.94	9.60	1.68
C0360-038-1750-M	0.360	9.14	0.038	0.97	1.750	44.45	0.831	21.11	0.526	13.36	7.63	33.94	8.30	1.45
C0360-038-2000-M	0.360	9.14	0.038	0.97	2.000	50.80	0.940	23.88	0.587	14.91	7.63	33.94	7.20	1.26
C0360-038-2250-M	0.360	9.14	0.038	0.97	2.250	57.15	1.058	26.87	0.649	16.48	7.63	33.94	6.40	1.12
C0360-038-2500-M	0.360	9.14	0.038	0.97	2.500	63.50	1.161	29.49	0.711	18.06	7.63	33.94	5.70	1.00
C0360-040-0440-M	0.360	9.14	0.040	1.02	0.440	11.18	0.259	6.58	0.218	5.54	8.32	37.01	46.00	8.05
C0360-040-0500-M	0.360	9.14	0.040	1.02	0.500	12.70	0.289	7.34	0.234	5.94	8.32	37.01	39.40	6.90
C0360-040-0560-M	0.360	9.14	0.040	1.02	0.560	14.22	0.319	8.10	0.250	6.35	8.32	37.01	34.50	6.04
C0360-040-0620-M	0.360	9.14	0.040	1.02	0.620	15.75	0.349	8.86	0.267	6.78	8.32	37.01	30.70	5.37
C0360-040-0690-M	0.360	9.14	0.040	1.02	0.690	17.53	0.383	9.73	0.286	7.26	8.32	37.01	27.10	4.74
C0360-040-0750-M	0.360	9.14	0.040	1.02	0.750	19.05	0.413	10.49	0.302	7.67	8.32	37.01	24.70	4.32
C0360-040-0810-M	0.360	9.14	0.040	1.02	0.810	20.57	0.443	11.25	0.318	8.08	8.32	37.01	22.70	3.97
C0360-040-0880-M	0.360	9.14	0.040	1.02	0.880	22.35	0.478	12.14	0.337	8.56	8.32	37.01	20.70	3.62
C0360-040-0940-M	0.360	9.14	0.040	1.02	0.940	23.88	0.508	12.90	0.353	8.97	8.32	37.01	19.20	3.36
C0360-040-1000-M	0.360	9.14	0.040	1.02	1.000	25.40	0.537	13.64	0.370	9.40	8.32	37.01	18.00	3.15
C0360-040-1120-M	0.360	9.14	0.040	1.02	1.120	28.45	0.597	15.16	0.402	10.21	8.32	37.01	15.90	2.78
C0360-040-1250-M	0.360	9.14	0.040	1.02	1.250	31.75	0.662	16.81	0.438	11.13	8.32	37.01	14.10	2.47
C0360-040-1380-M	0.360	9.14	0.040	1.02	1.380	35.05	0.726	18.44	0.473	12.01	8.32	37.01	12.70	2.22
C0360-040-1500-M	0.360	9.14	0.040	1.02	1.500	38.10	0.786	19.96	0.505	12.83	8.32	37.01	11.70	2.05
C0360-040-1750-M	0.360	9.14	0.040	1.02	1.750	44.45	0.910	23.11	0.573	14.55	8.32	37.01	9.90	1.73
C0360-040-2000-M	0.360	9.14	0.040	1.02	2.000	50.80	1.035	26.29	0.641	16.28	8.32	37.01	8.60	1.51
C0360-040-2250-M	0.360	9.14	0.040	1.02	2.250	57.15	1.159	29.44	0.709	18.01	8.32	37.01	7.60	1.33
C0360-040-2500-M	0.360	9.14	0.040	1.02	2.500	63.50	1.283	32.59	0.777	19.74	8.32	37.01	6.80	1.19
C0360-042-0440-M	0.360	9.14	0.042	1.07	0.440	11.18	0.268	6.81	0.209	5.31	10.00	44.48	58.10	10.17
C0360-042-0500-M	0.360	9.14	0.042	1.07	0.500	12.70	0.293	7.44	0.231	5.87	10.00	44.48	48.30	8.45
C0360-042-0560-M	0.360	9.14	0.042	1.07	0.560	14.22	0.318	8.08	0.252	6.40	10.00	44.48	41.30	7.23
C0360-042-0620-M	0.360	9.14	0.042	1.07	0.620	15.75	0.361	9.17	0.262	6.65	10.00	44.48	38.60	6.76
C0360-042-0690-M	0.360	9.14	0.042	1.07	0.690	17.53	0.396	10.06	0.284	7.21	10.00	44.48	34.00	5.95
C0360-042-0750-M	0.360	9.14	0.042	1.07	0.750	19.05	0.426	10.82	0.301	7.65	10.00	44.48	30.90	5.41
C0360-042-0810-M	0.360	9.14	0.042	1.07	0.810	20.57	0.447	11.35	0.326	8.28	10.00	44.48	27.50	4.81
C0360-042-0880-M	0.360	9.14	0.042	1.07	0.880	22.35	0.483	12.27	0.346	8.79	10.00	44.48	25.20	4.41
C0360-042-0940-M	0.360	9.14	0.042	1.07	0.940	23.88	0.508	12.90	0.368	9.35	10.00	44.48	23.10	4.04
C0360-042-1000-M	0.360	9.14	0.042	1.07	1.000	25.40	0.534	13.56	0.388	9.86	10.00	44.48	21.50	3.76
C0360-042-1120-M	0.360	9.14	0.042	1.07	1.120	28.45	0.585	14.86	0.430	10.92	10.00	44.48	18.70	3.27
C0360-042-1250-M	0.360	9.14	0.042	1.07	1.250	31.75	0.663	16.84	0.463	11.76	10.00	44.48	17.00	2.98
C0360-042-1380-M	0.360	9.14	0.042	1.07	1.380	35.05	0.741	18.82	0.495	12.57	10.00	44.48	15.60	2.73
C0360-042-1500-M	0.360	9.14	0.042	1.07	1.500	38.10	0.809	20.55	0.525	13.34	10.00	44.48	14.50	2.54
C0360-042-1750-M	0.360	9.14	0.042	1.07	1.750	44.45	0.903	22.94	0.621	15.77	10.00	44.48	11.80	2.07
C0360-042-2000-M	0.360	9.14	0.042	1.07	2.000	50.80	1.029	26.14	0.695	17.65	10.00	44.48	10.30	1.80
C0360-042-2250-M	0.360	9.14	0.042	1.07	2.250	57.15	1.151	29.24	0.770	19.56	10.00	44.48	9.10	1.59
C0360-042-2500-M	0.360	9.14	0.042	1.07	2.500	63.50	1.265	32.13	0.844	21.44	10.00	44.48	8.10	1.42
C0360-045-0440-M	0.360	9.14	0.045	1.14	0.440	11.18	0.287	7.29	0.224	5.69	12.09	53.78	79.00	13.83
C0360-045-0500-M	0.360	9.14	0.045	1.14	0.500	12.70	0.316	8.03	0.247	6.27	12.09	53.78	65.70	11.50
C0360-045-0560-M	0.360	9.14	0.045	1.14	0.560	14.22	0.345	8.76	0.270	6.86	12.09	53.78	56.20	9.84
C0360-045-0620-M	0.360	9.14	0.045	1.14	0.620	15.75	0.374	9.50	0.292	7.42	12.09	53.78	49.10	8.59
C0360-045-0690-M	0.360	9.14	0.045	1.14	0.690	17.53	0.414	10.52	0.314	7.98	12.09	53.78	43.80	7.67
C0360-045-0750-M	0.360	9.14	0.045	1.14	0.750	19.05	0.443	11.25	0.337	8.56	12.09	53.78	39.40	6.90
C0360-045-0810-M	0.360	9.14	0.045	1.14	0.810	20.57	0.472	11.99	0.359	9.12	12.09	53.78	35.80	6.27
C0360-045-0880-M	0.360	9.14	0.045	1.14	0.880	22.35	0.512	13.00	0.382	9.70	12.09	53.78	32.80	5.74
C0360-045-0940-M	0.360	9.14	0.045	1.14	0.940	23.88	0.541	13.74	0.404	10.26	12.09	53.78	30.30	5.30
C0360-045-1000-M	0.360	9.14	0.045	1.14	1.000	25.40	0.570	14.48	0.427	10.85	12.09	53.78	28.10	4.92
C0360-045-1120-M	0.360	9.14	0.045	1.14	1.120	28.45	0.629	15.98	0.472	11.99	12.09	53.78	24.60	4.31
C0360-045-1250-M	0.360	9.14	0.045	1.14	1.250	31.75	0.698	17.73	0.516	13.11	12.09	53.78	21.90	3.83
C0360-045-1380-M	0.360	9.14	0.045	1.14	1.380	35.05	0.766	19.46	0.562	14.27	12.09	53.78	19.70	3.45

STAINLESS STEEL

Catalog #	Load Length (L_1)		Load (P) at L_1		Spring Rate (R)	
	in	mm	lb	N	lb/in	N/mm
C0360-038-0620-S	0.393	9.98	4.71	20.94	20.74	3.63
C0360-038-0690-S	0.434	11.03	4.71	20.94	18.41	3.22
C0360-038-0750-S	0.478	12.15	4.71	20.94	17.33	3.03
C0360-038-0810-S	0.508	12.90	4.71	20.94	15.58	2.73
C0360-038-0880-S	0.548	13.91	4.71	20.94	14.16	2.48
C0360-038-0940-S	0.578	14.68	4.71	20.94	13.00	2.27
C0360-038-1000-S	0.623	15.83	4.71	20.94	12.50	2.19
C0360-038-1120-S	0.682	17.32	4.71	20.94	10.75	1.88
C0360-038-1250-S	0.767	19.48	4.71	20.94	9.75	1.71
C0360-038-1380-S	0.837	21.25	4.71	20.94	8.66	1.52
C0360-038-1500-S	0.911	23.15	4.71	20.94	8.00	1.40
C0360-038-1750-S	1.069	27.16	4.71	20.94	6.91	1.21
C0360-038-2000-S	1.215	30.87	4.71	20.94	6.00	1.05
C0360-038-2250-S	1.367	34.72	4.71	20.94	5.33	0.93
C0360-038-2500-S	1.509	38.32	4.71	20.94	4.75	0.83
C0360-040-0440-S	0.297	7.55	5.47	24.34	38.32	6.71
C0360-040-0500-S	0.333	8.46	5.47	24.34	32.82	5.74
C0360-040-0560-S	0.370	9.39	5.47	24.34	28.74	5.03
C0360-040-0620-S	0.406	10.31	5.47	24.34	25.57	4.48
C0360-040-0690-S	0.448	11.37	5.47	24.34	22.57	3.95
C0360-040-0750-S	0.484	12.29	5.47	24.34	20.58	3.60
C0360-040-0810-S	0.521	13.22	5.47	24.34	18.91	3.31
C0360-040-0880-S	0.563	14.29	5.47	24.34	17.24	3.02
C0360-040-0940-S	0.598	15.18	5.47	24.34	15.99	2.80
C0360-040-1000-S	0.635	16.13	5.47	24.34	14.99	2.62
C0360-040-1120-S	0.707	17.95	5.47	24.34	13.25	2.32
C0360-040-1250-S	0.784	19.92	5.47	24.34	11.75	2.06
C0360-040-1380-S	0.863	21.91	5.47	24.34	10.58	1.85
C0360-040-1500-S	0.938	23.84	5.47	24.34	9.75	1.71
C0360-040-1750-S	1.086	27.59	5.47	24.34	8.25	1.44
C0360-040-2000-S	1.236	31.40	5.47	24.34	7.16	1.25
C0360-040-2250-S	1.386	35.19	5.47	24.34	6.33	1.11
C0360-040-2500-S	1.534	38.96	5.47	24.34	5.66	0.99
C0360-042-0440-S	0.311	7.90	6.25	27.78	48.40	8.47
C0360-042-0500-S	0.345	8.76	6.25	27.78	40.23	7.04
C0360-042-0560-S	0.378	9.61	6.25	27.78	34.40	6.02
C0360-042-0620-S	0.426	10.81	6.25	27.78	32.15	5.63
C0360-042-0690-S	0.469	11.92	6.25	27.78	28.32	4.96
C0360-042-0750-S	0.507	12.89	6.25	27.78	25.74	4.50
C0360-042-0810-S	0.537	13.65	6.25	27.78	22.91	4.01
C0360-042-0880-S	0.582	14.79	6.25	27.78	20.99	3.67
C0360-042-0940-S	0.615	15.63	6.25	27.78	19.24	3.37
C0360-042-1000-S	0.651	16.54	6.25	27.78	17.91	3.13
C0360-042-1120-S	0.719	18.26	6.25	27.78	15.58	2.73
C0360-042-1250-S	0.809	20.55	6.25	27.78	14.16	2.48
C0360-042-1380-S	0.899	22.84	6.25	27.78	13.00	2.27
C0360-042-1500-S	0.983	24.97	6.25	27.78	12.08	2.11
C0360-042-1750-S	1.115	28.31	6.25	27.78	9.83	1.72
C0360-042-2000-S	1.272	32.31	6.25	27.78	8.58	1.50
C0360-042-2250-S	1.426	36.22	6.25	27.78	7.58	1.33
C0360-042-2500-S	1.574	39.99	6.25	27.78	6.75	1.18
C0360-045-0440-S	0.326	8.28	7.50	33.37	65.81	11.52
C0360-045-0500-S	0.363	9.22	7.50	33.37	54.73	9.58
C0360-045-0560-S	0.400	10.15	7.50	33.37	46.82	8.19
C0360-045-0620-S	0.437	11.09	7.50	33.37	40.90	7.16
C0360-045-0690-S	0.484	12.30	7.50	33.37	36.49	6.38
C0360-045-0750-S	0.521	13.24	7.50	33.37	32.82	5.74
C0360-045-0810-S	0.558	14.18	7.50	33.37	29.82	5.22
C0360-045-0880-S	0.605	15.38	7.50	33.37	27.32	4.78
C0360-045-0940-S	0.643	16.33	7.50	33.37	25.24	4.42
C0360-045-1000-S	0.679	17.26	7.50	33.37	23.41	4.10
C0360-045-1120-S	0.754	19.15	7.50	33.37	20.49	3.59
C0360-045-1250-S	0.839	21.30	7.50	33.37	18.24	3.19
C0360-045-1380-S	0.923	23.44	7.50	33.37	16.41	2.87

Part Numbers with an "*" are squared and not ground. **Part Numbers in bold** represent the newly expanded Associated Spring RAYMOND compression spring offering.

MUSIC WIRE															STAINLESS STEEL						
Catalog #	Outside Diameter (OD)		Wire Diameter (d)		Free Length (L) Approx		Load Length (L_1)		Solid Height (Sh) Approx		Load (P) at L_1		Spring Rate (R)		Catalog #	Load Length (L_1)		Load (P) at L_1		Spring Rate (R)	
	in	mm	in	mm	in	mm	in	mm	in	mm	lb	N	lb/in	N/mm		in	mm	lb	N	lb/in	N/mm
C0360-045-1500-M	0.360	9.14	0.045	1.14	1.500	38.10	0.825	20.96	0.607	15.42	12.09	53.78	17.90	3.13	C0360-045-1500-S	0.997	25.32	7.50	33.37	14.91	2.61
C0360-045-1750-M	0.360	9.14	0.045	1.14	1.750	44.45	0.955	24.26	0.694	17.63	12.09	53.78	15.20	2.66	C0360-045-1750-S	1.157	29.40	7.50	33.37	12.66	2.22
C0360-045-2000-M	0.360	9.14	0.045	1.14	2.000	50.80	1.084	27.53	0.778	19.76	12.09	53.78	13.20	2.31	C0360-045-2000-S	1.318	33.47	7.50	33.37	11.00	1.92
C0360-045-2250-M	0.360	9.14	0.045	1.14	2.250	57.15	1.217	30.91	0.862	21.89	12.09	53.78	11.70	2.05	C0360-045-2250-S	1.480	37.60	7.50	33.37	9.75	1.71
C0360-045-2500-M	0.360	9.14	0.045	1.14	2.500	63.50	1.349	34.26	0.946	24.03	12.09	53.78	10.50	1.84	C0360-045-2500-S	1.642	41.71	7.50	33.37	8.75	1.53
C0360-045-2750-M	0.360	9.14	0.045	1.14	2.750	69.85	1.532	38.91	0.990	25.15	12.09	53.78	9.90	1.73	C0360-045-2750-S	1.840	46.74	7.50	33.37	8.25	1.44
C0360-047-0440-M	0.360	9.14	0.047	1.19	0.440	11.18	0.299	7.59	0.257	6.53	13.01	57.87	92.60	16.21	C0360-047-0440-S	0.330	8.37	8.52	37.89	77.14	13.50
C0360-047-0500-M	0.360	9.14	0.047	1.19	0.500	12.70	0.335	8.51	0.277	7.04	13.01	57.87	78.90	13.81	C0360-047-0500-S	0.370	9.41	8.52	37.89	65.72	11.50
C0360-047-0560-M	0.360	9.14	0.047	1.19	0.560	14.22	0.371	9.42	0.297	7.54	13.01	57.87	68.70	12.02	C0360-047-0560-S	0.411	10.44	8.52	37.89	57.23	10.01
C0360-047-0620-M	0.360	9.14	0.047	1.19	0.620	15.75	0.406	10.31	0.318	8.08	13.01	57.87	60.90	10.66	C0360-047-0620-S	0.452	11.48	8.52	37.89	50.73	8.88
C0360-047-0690-M	0.360	9.14	0.047	1.19	0.690	17.53	0.448	11.38	0.341	8.66	13.01	57.87	53.70	9.40	C0360-047-0690-S	0.500	12.69	8.52	37.89	44.73	7.83
C0360-047-0750-M	0.360	9.14	0.047	1.19	0.750	19.05	0.484	12.29	0.361	9.17	13.01	57.87	48.80	8.54	C0360-047-0750-S	0.540	13.73	8.52	37.89	40.65	7.11
C0360-047-0810-M	0.360	9.14	0.047	1.19	0.810	20.57	0.519	13.18	0.381	9.68	13.01	57.87	44.70	7.82	C0360-047-0810-S	0.581	14.76	8.52	37.89	37.24	6.52
C0360-047-0880-M	0.360	9.14	0.047	1.19	0.880	22.35	0.561	14.25	0.405	10.29	13.01	57.87	40.70	7.12	C0360-047-0880-S	0.629	15.97	8.52	37.89	33.90	5.93
C0360-047-0940-M	0.360	9.14	0.047	1.19	0.940	23.88	0.596	15.14	0.425	10.80	13.01	57.87	37.90	6.63	C0360-047-0940-S	0.670	17.02	8.52	37.89	31.57	5.52
C0360-047-1000-M	0.360	9.14	0.047	1.19	1.000	25.40	0.632	16.05	0.445	11.30	13.01	57.87	35.30	6.18	C0360-047-1000-S	0.710	18.04	8.52	37.89	29.41	5.15
C0360-047-1120-M	0.360	9.14	0.047	1.19	1.120	28.45	0.703	17.86	0.485	12.32	13.01	57.87	31.20	5.46	C0360-047-1120-S	0.792	20.12	8.52	37.89	25.99	4.55
C0360-047-1250-M	0.360	9.14	0.047	1.19	1.250	31.75	0.780	19.81	0.529	13.44	13.01	57.87	27.70	4.85	C0360-047-1250-S	0.881	22.37	8.52	37.89	23.07	4.04
C0360-047-1380-M	0.360	9.14	0.047	1.19	1.380	35.05	0.858	21.79	0.573	14.55	13.01	57.87	24.90	4.36	C0360-047-1380-S	0.969	24.62	8.52	37.89	20.74	3.63
C0360-047-1500-M	0.360	9.14	0.047	1.19	1.500	38.10	0.929	23.60	0.613	15.57	13.01	57.87	22.80	3.99	C0360-047-1500-S	1.051	26.71	8.52	37.89	18.99	3.32
C0360-047-1750-M	0.360	9.14	0.047	1.19	1.750	44.45	1.077	27.36	0.697	17.70	13.01	57.87	19.30	3.38	C0360-047-1750-S	1.220	30.99	8.52	37.89	16.08	2.81
C0360-047-2000-M	0.360	9.14	0.047	1.19	2.000	50.80	1.226	31.14	0.781	19.84	13.01	57.87	16.80	2.94	C0360-047-2000-S	1.391	35.34	8.52	37.89	13.99	2.45
C0360-047-2250-M	0.360	9.14	0.047	1.19	2.250	57.15	1.374	34.90	0.865	21.97	13.01	57.87	14.90	2.61	C0360-047-2250-S	1.564	39.72	8.52	37.89	12.41	2.17
C0360-047-2500-M	0.360	9.14	0.047	1.19	2.500	63.50	1.523	38.68	0.949	24.10	13.01	57.87	13.30	2.33	C0360-047-2500-S	1.731	43.97	8.52	37.89	11.08	1.94
C0360-047-2750-M	0.360	9.14	0.047	1.19	2.750	69.85	1.671	42.44	1.033	26.24	13.01	57.87	12.10	2.12	C0360-047-2750-S	1.905	48.38	8.52	37.89	10.08	1.76
C0360-047-3000-M	0.360	9.14	0.047	1.19	3.000	76.20	1.819	46.20	1.117	28.37	13.01	57.87	11.00	1.93	C0360-047-3000-S	2.070	52.59	8.52	37.89	9.16	1.60
C0360-047-3250-M	0.360	9.14	0.047	1.19	3.250	82.55	1.968	49.99	1.201	30.51	13.01	57.87	10.10	1.77	C0360-047-3250-S	2.238	56.83	8.52	37.89	8.41	1.47
C0360-047-3500-M	0.360	9.14	0.047	1.19	3.500	88.90	2.116	53.75	1.284	32.61	13.01	57.87	9.40	1.65	C0360-047-3500-S	2.412	61.27	8.52	37.89	7.83	1.37
C0360-049-0440-M	0.360	9.14	0.049	1.25	0.440	11.18	0.306	7.77	0.271	6.88	14.55	64.72	108.70	19.02	C0360-049-0440-S	0.334	8.48	9.62	42.78	90.55	15.85
C0360-049-0500-M	0.360	9.14	0.049	1.25	0.500	12.70	0.343	8.71	0.293	7.44	14.55	64.72	92.50	16.19	C0360-049-0500-S	0.375	9.53	9.62	42.78	77.05	13.48
C0360-049-0560-M	0.360	9.14	0.049	1.25	0.560	14.22	0.379	9.63	0.315	8.00	14.55	64.72	80.50	14.09	C0360-049-0560-S	0.417	10.58	9.62	42.78	67.06	11.73
C0360-049-0620-M	0.360	9.14	0.049	1.25	0.620	15.75	0.416	10.57	0.336	8.53	14.55	64.72	71.20	12.46	C0360-049-0620-S	0.458	11.63	9.62	42.78	59.31	10.38
C0360-049-0690-M	0.360	9.14	0.049	1.25	0.690	17.53	0.458	11.63	0.362	9.19	14.55	64.72	62.80	10.99	C0360-049-0690-S	0.506	12.86	9.62	42.78	52.31	9.15
C0360-049-0750-M	0.360	9.14	0.049	1.25	0.750	19.05	0.495	12.57	0.384	9.75	14.55	64.72	57.00	9.98	C0360-049-0750-S	0.547	13.90	9.62	42.78	47.48	8.31
C0360-049-0810-M	0.360	9.14	0.049	1.25	0.810	20.57	0.532	13.51	0.405	10.29	14.55	64.72	52.20	9.14	C0360-049-0810-S	0.589	14.96	9.62	42.78	43.48	7.61
C0360-049-0880-M	0.360	9.14	0.049	1.25	0.880	22.35	0.574	14.58	0.431	10.95	14.55	64.72	47.60	8.33	C0360-049-0880-S	0.637	16.19	9.62	42.78	39.65	6.94
C0360-049-0940-M	0.360	9.14	0.049	1.25	0.940	23.88	0.611	15.52	0.453	11.51	14.55	64.72	44.20	7.74	C0360-049-0940-S	0.679	17.24	9.62	42.78	36.82	6.44
C0360-049-1000-M	0.360	9.14	0.049	1.25	1.000	25.40	0.647	16.43	0.474	12.04	14.55	64.72	41.20	7.21	C0360-049-1000-S	0.720	18.28	9.62	42.78	34.32	6.01
C0360-049-1120-M	0.360	9.14	0.049	1.25	1.120	28.45	0.720	18.29	0.518	13.16	14.55	64.72	36.40	6.37	C0360-049-1120-S	0.803	20.39	9.62	42.78	30.32	5.31
C0360-049-1250-M	0.360	9.14	0.049	1.25	1.250	31.75	0.799	20.29	0.565	14.35	14.55	64.72	32.30	5.65	C0360-049-1250-S	0.893	22.67	9.62	42.78	26.91	4.71
C0360-049-1380-M	0.360	9.14	0.049	1.25	1.380	35.05	0.879	22.33	0.612	15.54	14.55	64.72	29.00	5.08	C0360-049-1380-S	0.982	24.94	9.62	42.78	24.16	4.23
C0360-049-1500-M	0.360	9.14	0.049	1.25	1.500	38.10	0.952	24.18	0.656	16.66	14.55	64.72	26.50	4.64	C0360-049-1500-S	1.064	27.03	9.62	42.78	22.08	3.86
C0360-049-1750-M	0.360	9.14	0.049	1.25	1.750	44.45	1.104	28.04	0.747	18.97	14.55	64.72	22.50	3.94	C0360-049-1750-S	1.237	31.42	9.62	42.78	18.74	3.28
C0360-049-2000-M	0.360	9.14	0.049	1.25	2.000	50.80	1.256	31.90	0.837	21.26	14.55	64.72	19.60	3.43	C0360-049-2000-S	1.411	35.84	9.62	42.78	16.33	2.86
C0360-049-2250-M	0.360	9.14	0.049	1.25	2.250	57.15	1.408	35.76	0.928	23.57	14.55	64.72	17.30	3.03	C0360-049-2250-S	1.583	40.20	9.62	42.78	14.41	2.52
C0360-049-2500-M	0.360	9.14	0.049	1.25	2.500	63.50	1.561	39.65	1.019	25.88	14.55	64.72	15.50	2.71	C0360-049-2500-S	1.755	44.58	9.62	42.78	12.91	2.26
C0360-049-2750-M	0.360	9.14	0.049	1.25	2.750	69.85	1.713	43.51	1.110	28.19	14.55	64.72	14.00	2.45	C0360-049-2750-S	1.925	48.90	9.62	42.78	11.66	2.04
C0360-049-3000-M	0.360	9.14	0.049	1.25	3.000	76.20	1.865	47.37	1.200	30.48	14.55	64.72	12.80	2.24	C0360-049-3000-S	2.098	53.29	9.62	42.78	10.66	1.87
C0360-049-3250-M	0.360	9.14	0.049	1.25	3.250	82.55	2.017	51.23	1.291	32.79	14.55	64.72	11.80	2.07	C0360-049-3250-S	2.271	57.70	9.62	42.78	9.83	1.72
C0360-049-3500-M	0.360	9.14	0.049	1.25	3.500	88.90	2.169	55.09	1.382	35.10	14.55	64.72	10.90	1.91	C0360-049-3500-S	2.441	61.99	9.62	42.78	9.08	1.59
C0360-051-0440-M	0.360	9.14	0.051	1.30	0.440	11.18	0.311	7.90	0.286	7.26	16.34	72.68	126.80	22.19	C0360-051-0440-S	0.338	8.60	10.72	47.70	105.62	18.48
C0360-051-0500-M	0.360	9.14	0.051	1.30	0.500	12.70	0.348	8.84	0.309	7.85	16.34	72.68	107.70	18.85	C0360-051-0500-S	0.380	9.66	10.72	47.70	89.71	15.70
C0360-051-0560-M	0.360	9.14	0.051	1.30	0.560	14.22	0.385	9.78	0.333	8.46	16.34	72.68	93.60	16.38	C0360-051-0560-S	0.422	10.73	10.72	47.70	77.97	13.64
C0360-051-0620-M	0.360	9.14	0.051	1.30	0.620	15.75	0.422	10.72	0.356	9.04	16.34	72.68	82.70	14.47	C0360-051-0620-S	0.464	11.79	10.72	47.70	68.89	12.06
C0360-051-0690-M	0.360	9.14	0.051	1.30	0.690	17.53	0.466	11.84	0.384	9.75	16.34	72.68	72.90	12.76	C0360-051-0690-S	0.513	13.04	10.72	47.70	60.73	10.63
C0360-051-0750-M	0.360	9.14	0.051	1.30	0.750	19.05	0.503	12.78	0.407	10.34	16.34	72.68	66.10	11.57	C0360-051-0750-S	0.555	14.10	10.72	47.70	55.06	9.64
C0360-051-0810-M	0.360	9.14	0.051	1.30	0.810	20.57	0.540	13.72	0.431	10.95	16.34	72.68	60.50	10.59	C0360-051-0810-S	0.597	15.17	10.72	47.70	50.40	8.82
C0360-051-0880-M	0.360	9.14	0.051	1.30	0.880	22.35	0.583	14.81	0.458	11.63	16.34	72.68	55.10	9.64	C0360-051-0880-S	0.646	16.42	10.72	47.70	45.90	8.03
C0360-051-0940-M	0.360	9.14	0.051	1.30	0.940	23.88	0.620	15.75	0.482	12.24	16.34	72.68	51.10	8.94	C0360-051-0940-S	0.688	17.48	10.72	47.70	42.57	7.45
C0360-051-1000-M	0.360	9.14	0.051	1.30	1.000	25.40	0.658	16.71	0.505	12.83	16.34	72.68	47.70	8.35	C0360-051-1000-S	0.730	18.54	10.72	47.70	39.73	6.95
C0360-051-1120-M	0.360	9.14	0.051	1.30	1.120	28.45	0.732	18.59	0.552	14.02	16.34	72.68	42.10	7.37	C0360-051-1120-S	0.814	20.68	10.72	47.70	35.07	6.14
C0360-051-1250-M	0.360	9.14	0.051	1.30	1.250	31.75	0.812	20.62	0.603	15.32	16.34	72.68	37.30	6.53	C0360-051-1250-S	0.905	22.98	10.72	47.70	31.07	5.44
C0360-051-1380-M	0.360	9.14	0.051	1.30	1.380	35.05	0.893	22.68	0.654	16.61	16.34	72.68	33.50	5.86	C0360-051-1380-S	0.996	25.29	10.72	47.70	27.91	4.88
C0360-051-1500-M	0.360	9.14	0.051	1.30	1.500	38.10	0.967	24.56	0.701	17.81	16.34	72.68	30.70	5.37	C0360-051-1500-S	1.081	27.45	10.72	47.70	25.57	4.48

FOR INFORMATION ON ALTERNATIVE FINISHES, SEE PAGE 311

Part Numbers with an "*" are squared and not ground. **Part Numbers in bold** represent the newly expanded Associated Spring RAYMOND compression spring offering.

MUSIC WIRE															STAINLESS STEEL						
Catalog #	Outside Diameter (OD)		Wire Diameter (d)		Free Length (L) Approx		Load Length (L_1)		Solid Height (Sh) Approx		Load (P) at L_1		Spring Rate (R)		Catalog #	Load Length (L_1)		Load (P) at L_1		Spring Rate (R)	
	in	mm	in	mm	in	mm	in	mm	in	mm	lb	N	lb/in	N/mm		in	mm	lb	N	lb/in	N/mm
C0360-051-1750-M	0.360	9.14	0.051	1.30	1.750	44.45	1.122	28.50	0.800	20.32	16.34	72.68	26.00	4.55	C0360-051-1750-S	1.255	31.87	10.72	47.70	21.66	3.79
C0360-051-2000-M	0.360	9.14	0.051	1.30	2.000	50.80	1.276	32.41	0.898	22.81	16.34	72.68	22.60	3.96	C0360-051-2000-S	1.430	36.33	10.72	47.70	18.83	3.29
C0360-051-2250-M	0.360	9.14	0.051	1.30	2.250	57.15	1.431	36.35	0.996	25.30	16.34	72.68	19.90	3.48	C0360-051-2250-S	1.603	40.72	10.72	47.70	16.58	2.90
C0360-051-2500-M	0.360	9.14	0.051	1.30	2.500	63.50	1.586	40.28	1.094	27.79	16.34	72.68	17.90	3.13	C0360-051-2500-S	1.781	45.23	10.72	47.70	14.91	2.61
C0360-051-2750-M	0.360	9.14	0.051	1.30	2.750	69.85	1.740	44.20	1.192	30.28	16.34	72.68	16.20	2.84	C0360-051-2750-S	1.955	49.67	10.72	47.70	13.50	2.36
C0360-051-3000-M	0.360	9.14	0.051	1.30	3.000	76.20	1.895	48.13	1.290	32.77	16.34	72.68	14.80	2.59	C0360-051-3000-S	2.130	54.11	10.72	47.70	12.33	2.16
C0360-051-3250-M	0.360	9.14	0.051	1.30	3.250	82.55	2.050	52.07	1.388	35.26	16.34	72.68	13.60	2.38	C0360-051-3250-S	2.303	58.51	10.72	47.70	11.33	1.98
C0360-051-3500-M	0.360	9.14	0.051	1.30	3.500	88.90	2.204	55.98	1.486	37.74	16.34	72.68	12.60	2.21	C0360-051-3500-S	2.478	62.95	10.72	47.70	10.50	1.84
C0360-055-0440-M	0.360	9.14	0.055	1.40	0.440	11.18	0.325	8.26	0.310	7.87	20.14	89.59	175.60	30.73	C0360-055-0440-S	0.350	8.89	13.15	58.48	146.28	25.60
C0360-055-0500-M	0.360	9.14	0.055	1.40	0.500	12.70	0.364	9.25	0.337	8.56	20.14	89.59	148.60	26.01	C0360-055-0500-S	0.394	10.00	13.15	58.48	123.78	21.66
C0360-055-0560-M	0.360	9.14	0.055	1.40	0.560	14.22	0.404	10.26	0.363	9.22	20.14	89.59	128.80	22.54	C0360-055-0560-S	0.437	11.11	13.15	58.48	107.29	18.78
C0360-055-0620-M	0.360	9.14	0.055	1.40	0.620	15.75	0.443	11.25	0.389	9.88	20.14	89.59	113.60	19.88	C0360-055-0620-S	0.481	12.22	13.15	58.48	94.63	16.56
C0360-055-0690-M	0.360	9.14	0.055	1.40	0.690	17.53	0.488	12.40	0.420	10.67	20.14	89.59	99.90	17.48	C0360-055-0690-S	0.532	13.51	13.15	58.48	83.22	14.56
C0360-055-0750-M	0.360	9.14	0.055	1.40	0.750	19.05	0.528	13.41	0.447	11.35	20.14	89.59	90.60	15.86	C0360-055-0750-S	0.576	14.63	13.15	58.48	75.47	13.21
C0360-055-0810-M	0.360	9.14	0.055	1.40	0.810	20.57	0.567	14.40	0.473	12.01	20.14	89.59	82.80	14.49	C0360-055-0810-S	0.619	15.73	13.15	58.48	68.97	12.07
C0360-055-0880-M	0.360	9.14	0.055	1.40	0.880	22.35	0.612	15.54	0.504	12.80	20.14	89.59	75.30	13.18	C0360-055-0880-S	0.670	17.03	13.15	58.48	62.73	10.98
C0360-055-0940-M	0.360	9.14	0.055	1.40	0.940	23.88	0.652	16.56	0.530	13.46	20.14	89.59	69.80	12.22	C0360-055-0940-S	0.714	18.13	13.15	58.48	58.14	10.18
C0360-055-1000-M	0.360	9.14	0.055	1.40	1.000	25.40	0.691	17.55	0.557	14.15	20.14	89.59	65.10	11.39	C0360-055-1000-S	0.758	19.24	13.15	58.48	54.23	9.49
C0360-055-1120-M	0.360	9.14	0.055	1.40	1.120	28.45	0.769	19.53	0.609	15.47	20.14	89.59	57.40	10.05	C0360-055-1120-S	0.845	21.46	13.15	58.48	47.81	8.37
C0360-055-1250-M	0.360	9.14	0.055	1.40	1.250	31.75	0.854	21.69	0.667	16.94	20.14	89.59	50.80	8.89	C0360-055-1250-S	0.939	23.86	13.15	58.48	42.32	7.41
C0360-055-1380-M	0.360	9.14	0.055	1.40	1.380	35.05	0.939	23.85	0.724	18.39	20.14	89.59	45.60	7.98	C0360-055-1380-S	1.034	26.26	13.15	58.48	37.99	6.65
C0360-055-1500-M	0.360	9.14	0.055	1.40	1.500	38.10	1.017	25.83	0.777	19.74	20.14	89.59	41.70	7.30	C0360-055-1500-S	1.122	28.49	13.15	58.48	34.74	6.08
C0360-055-1750-M	0.360	9.14	0.055	1.40	1.750	44.45	1.180	29.97	0.887	22.53	20.14	89.59	35.30	6.18	C0360-055-1750-S	1.303	33.09	13.15	58.48	29.41	5.15
C0360-055-2000-M	0.360	9.14	0.055	1.40	2.000	50.80	1.343	34.11	0.997	25.32	20.14	89.59	30.70	5.37	C0360-055-2000-S	1.486	37.74	13.15	58.48	25.57	4.48
C0360-055-2250-M	0.360	9.14	0.055	1.40	2.250	57.15	1.506	38.25	1.107	28.12	20.14	89.59	27.10	4.74	C0360-055-2250-S	1.668	42.36	13.15	58.48	22.57	3.95
C0360-055-2500-M	0.360	9.14	0.055	1.40	2.500	63.50	1.670	42.42	1.217	30.91	20.14	89.59	24.20	4.24	C0360-055-2500-S	1.848	46.94	13.15	58.48	20.16	3.53
C0360-055-2750-M	0.360	9.14	0.055	1.40	2.750	69.85	1.833	46.56	1.327	33.71	20.14	89.59	22.00	3.85	C0360-055-2750-S	2.033	51.63	13.15	58.48	18.33	3.21
C0360-055-3000-M	0.360	9.14	0.055	1.40	3.000	76.20	1.996	50.70	1.437	36.50	20.14	89.59	20.10	3.52	C0360-055-3000-S	2.215	56.26	13.15	58.48	16.74	2.93
C0360-055-3250-M	0.360	9.14	0.055	1.40	3.250	82.55	2.159	54.84	1.547	39.29	20.14	89.59	18.50	3.24	C0360-055-3250-S	2.397	60.88	13.15	58.48	15.41	2.70
C0360-055-3500-M	0.360	9.14	0.055	1.40	3.500	88.90	2.322	58.98	1.657	42.09	20.14	89.59	17.10	2.99	C0360-055-3500-S	2.577	65.46	13.15	58.48	14.24	2.49
C0360-059-0440-M	0.360	9.14	0.059	1.50	0.440	11.18	0.338	8.59	0.321	8.15	24.33	108.23	238.00	41.65	C0360-059-0440-S	0.360	9.14	15.91	70.78	198.25	34.69
C0360-059-0500-M	0.360	9.14	0.059	1.50	0.500	12.70	0.379	9.63	0.356	9.04	24.33	108.23	200.60	35.11	C0360-059-0500-S	0.405	10.28	15.91	70.78	167.10	29.24
C0360-059-0560-M	0.360	9.14	0.059	1.50	0.560	14.22	0.420	10.67	0.388	9.86	24.33	108.23	173.40	30.35	C0360-059-0560-S	0.450	11.43	15.91	70.78	144.44	25.28
C0360-059-0620-M	0.360	9.14	0.059	1.50	0.620	15.75	0.461	11.71	0.421	10.69	24.33	108.23	152.70	26.72	C0360-059-0620-S	0.495	12.57	15.91	70.78	127.20	22.26
C0360-059-0690-M	0.360	9.14	0.059	1.50	0.690	17.53	0.508	12.90	0.458	11.63	24.33	108.23	134.00	23.45	C0360-059-0690-S	0.547	13.91	15.91	70.78	111.62	19.53
C0360-059-0750-M	0.360	9.14	0.059	1.50	0.750	19.05	0.549	13.94	0.488	12.40	24.33	108.23	121.30	21.23	C0360-059-0750-S	0.593	15.05	15.91	70.78	101.04	17.68
C0360-059-0810-M	0.360	9.14	0.059	1.50	0.810	20.57	0.590	14.99	0.517	13.13	24.33	108.23	110.80	19.39	C0360-059-0810-S	0.638	16.20	15.91	70.78	92.30	16.15
C0360-059-0880-M	0.360	9.14	0.059	1.50	0.880	22.35	0.638	16.21	0.552	14.02	24.33	108.23	100.60	17.61	C0360-059-0880-S	0.690	17.53	15.91	70.78	83.80	14.67
C0360-059-0940-M	0.360	9.14	0.059	1.50	0.940	23.88	0.679	17.25	0.581	14.76	24.33	108.23	93.20	16.31	C0360-059-0940-S	0.735	18.67	15.91	70.78	77.64	13.59
C0360-059-1000-M	0.360	9.14	0.059	1.50	1.000	25.40	0.720	18.29	0.611	15.52	24.33	108.23	86.90	15.21	C0360-059-1000-S	0.780	19.82	15.91	70.78	72.39	12.67
C0360-059-1120-M	0.360	9.14	0.059	1.50	1.120	28.45	0.802	20.37	0.670	17.02	24.33	108.23	76.50	13.39	C0360-059-1120-S	0.870	22.11	15.91	70.78	63.73	11.15
C0360-059-1250-M	0.360	9.14	0.059	1.50	1.250	31.75	0.891	22.63	0.734	18.64	24.33	108.23	67.70	11.85	C0360-059-1250-S	0.968	24.58	15.91	70.78	56.39	9.87
C0360-059-1380-M	0.360	9.14	0.059	1.50	1.380	35.05	0.979	24.87	0.797	20.24	24.33	108.23	60.70	10.62	C0360-059-1380-S	1.065	27.06	15.91	70.78	50.56	8.85
C0360-059-1500-M	0.360	9.14	0.059	1.50	1.500	38.10	1.061	26.95	0.856	21.74	24.33	108.23	55.50	9.71	C0360-059-1500-S	1.156	29.36	15.91	70.78	46.23	8.09
C0360-059-1750-M	0.360	9.14	0.059	1.50	1.750	44.45	1.232	31.29	0.979	24.87	24.33	108.23	47.00	8.23	C0360-059-1750-S	1.344	34.13	15.91	70.78	39.15	6.85
C0360-059-2000-M	0.360	9.14	0.059	1.50	2.000	50.80	1.403	35.64	1.102	27.99	24.33	108.23	40.70	7.12	C0360-059-2000-S	1.531	38.88	15.91	70.78	33.90	5.93
C0360-059-2250-M	0.360	9.14	0.059	1.50	2.250	57.15	1.573	39.95	1.225	31.12	24.33	108.23	36.00	6.30	C0360-059-2250-S	1.719	43.67	15.91	70.78	29.99	5.25
C0360-059-2500-M	0.360	9.14	0.059	1.50	2.500	63.50	1.744	44.30	1.348	34.24	24.33	108.23	32.20	5.64	C0360-059-2500-S	1.907	48.43	15.91	70.78	26.82	4.69
C0360-059-2750-M	0.360	9.14	0.059	1.50	2.750	69.85	1.915	48.64	1.471	37.36	24.33	108.23	29.10	5.09	C0360-059-2750-S	2.094	53.18	15.91	70.78	24.24	4.24
C0360-059-3000-M	0.360	9.14	0.059	1.50	3.000	76.20	2.085	52.96	1.594	40.49	24.33	108.23	26.60	4.66	C0360-059-3000-S	2.282	57.96	15.91	70.78	22.16	3.88
C0360-059-3250-M	0.360	9.14	0.059	1.50	3.250	82.55	2.256	57.30	1.717	43.61	24.33	108.23	24.50	4.29	C0360-059-3250-S	2.470	62.75	15.91	70.78	20.41	3.57
C0360-059-3500-M	0.360	9.14	0.059	1.50	3.500	88.90	2.427	61.65	1.840	46.74	24.33	108.23	22.70	3.97	C0360-059-3500-S	2.659	67.53	15.91	70.78	18.91	3.31
D12150	0.364	9.25	0.049	1.25	0.591	15.00	0.291	7.40	0.271	6.88	23.59	104.93	81.83	14.32	D22150	0.291	7.40	19.65	87.41	68.17	11.93
D12160	0.364	9.25	0.049	1.25	0.866	22.00	0.413	10.50	0.369	9.38	23.59	104.93	50.97	8.92	D22160	0.413	10.50	19.65	87.41	42.46	7.43
D12170	0.364	9.25	0.049	1.25	1.299	33.00	0.587	14.90	0.517	13.13	23.59	104.93	33.31	5.83	D22170	0.587	14.90	19.65	87.41	27.77	4.86
D12180	0.364	9.25	0.049	1.25	1.870	47.50	0.827	21.00	0.714	18.13	23.59	104.93	22.63	3.96	D22180	0.827	21.00	19.65	87.41	18.86	3.30
D12190	0.364	9.25	0.049	1.25	2.717	69.00	1.181	30.00	1.009	25.63	23.59	104.93	15.37	2.69	D22190	1.181	30.00	19.65	87.41	12.80	2.24
C0375-026-0500-M	**0.375**	**9.53**	**0.026**	**0.66**	**0.500**	**12.70**	**0.170**	**4.32**	**0.118**	**2.99**	**2.06**	**9.15**	**6.24**	**1.09**	**C0375-026-0500-S**	**0.170**	**4.32**	**1.71**	**7.63**	**5.20**	**0.91**
C0375-026-0563-M	**0.375**	**9.53**	**0.026**	**0.66**	**0.563**	**14.30**	**0.188**	**4.78**	**0.128**	**3.26**	**2.05**	**9.12**	**5.47**	**0.96**	**C0375-026-0563-S**	**0.188**	**4.78**	**1.71**	**7.60**	**4.56**	**0.80**
C0375-026-0625-M	**0.375**	**9.53**	**0.026**	**0.66**	**0.625**	**15.88**	**0.206**	**5.23**	**0.139**	**3.52**	**2.05**	**9.10**	**4.88**	**0.85**	**C0375-026-0625-S**	**0.206**	**5.23**	**1.70**	**7.58**	**4.07**	**0.71**
C0375-026-0688-M	**0.375**	**9.53**	**0.026**	**0.66**	**0.688**	**17.48**	**0.224**	**5.69**	**0.149**	**3.79**	**2.04**	**9.06**	**4.39**	**0.77**	**C0375-026-0688-S**	**0.224**	**5.69**	**1.70**	**7.55**	**3.66**	**0.64**
C0375-026-0750-M	**0.375**	**9.53**	**0.026**	**0.66**	**0.750**	**19.05**	**0.242**	**6.14**	**0.160**	**4.06**	**2.03**	**9.04**	**4.00**	**0.70**	**C0375-026-0750-S**	**0.242**	**6.14**	**1.69**	**7.53**	**3.33**	**0.58**
C0375-026-0813-M	**0.375**	**9.53**	**0.026**	**0.66**	**0.813**	**20.65**	**0.259**	**6.58**	**0.170**	**4.31**	**2.03**	**9.04**	**3.67**	**0.64**	**C0375-026-0813-S**	**0.259**	**6.58**	**1.69**	**7.53**	**3.06**	**0.53**
C0375-026-0875-M	**0.375**	**9.53**	**0.026**	**0.66**	**0.875**	**22.23**	**0.276**	**7.01**	**0.179**	**4.54**	**2.04**	**9.06**	**3.40**	**0.60**	**C0375-026-0875-S**	**0.276**	**7.01**	**1.70**	**7.55**	**2.83**	**0.50**

Part Numbers with an "*" are squared and not ground. **Part Numbers in bold** represent the newly expanded Associated Spring RAYMOND compression spring offering.

MUSIC WIRE

Catalog #	Outside Diameter (OD)		Wire Diameter (d)		Free Length (L) Approx		Load Length (L_1)		Solid Height (Sh) Approx		Load (P) at L_1		Spring Rate (R)	
	in	mm	in	mm	in	mm	in	mm	in	mm	lb	N	lb/in	N/mm
C0375-026-0938-M	**0.375**	**9.53**	**0.026**	**0.66**	**0.938**	**23.83**	**0.293**	**7.45**	**0.189**	**4.79**	**2.03**	**9.03**	**3.15**	**0.55**
C0375-026-1000-M	**0.375**	**9.53**	**0.026**	**0.66**	**1.000**	**25.40**	**0.310**	**7.87**	**0.198**	**5.02**	**2.04**	**9.05**	**2.95**	**0.52**
C0375-026-1125-M	**0.375**	**9.53**	**0.026**	**0.66**	**1.125**	**28.58**	**0.344**	**8.75**	**0.217**	**5.51**	**2.03**	**9.03**	**2.60**	**0.46**
C0375-026-1250-M	**0.375**	**9.53**	**0.026**	**0.66**	**1.250**	**31.75**	**0.378**	**9.61**	**0.236**	**5.99**	**2.03**	**9.03**	**2.33**	**0.41**
C0375-026-1500-M	**0.375**	**9.53**	**0.026**	**0.66**	**1.500**	**38.10**	**0.446**	**11.33**	**0.273**	**6.94**	**2.03**	**9.05**	**1.93**	**0.34**
C0375-026-1750-M	**0.375**	**9.53**	**0.026**	**0.66**	**1.750**	**44.45**	**0.514**	**13.05**	**0.310**	**7.88**	**2.04**	**9.07**	**1.65**	**0.29**
C0375-026-2000-M	**0.375**	**9.53**	**0.026**	**0.66**	**2.000**	**50.80**	**0.583**	**14.81**	**0.350**	**8.88**	**2.03**	**9.01**	**1.43**	**0.25**
C0375-026-2250-M	**0.375**	**9.53**	**0.026**	**0.66**	**2.250**	**57.15**	**0.651**	**16.53**	**0.387**	**9.82**	**2.03**	**9.04**	**1.27**	**0.22**
C0375-030-0630-M	**0.375**	**9.53**	**0.030**	**0.76**	**0.630**	**16.00**	**0.299**	**7.60**	**0.253**	**6.43**	**1.55**	**6.91**	**4.70**	**0.82**
C0375-030-0880-M	**0.375**	**9.53**	**0.030**	**0.76**	**0.880**	**22.35**	**0.359**	**9.13**	**0.281**	**7.13**	**2.13**	**9.50**	**4.10**	**0.72**
C0375-030-0940-M	**0.375**	**9.53**	**0.030**	**0.76**	**0.940**	**23.88**	**0.326**	**8.28**	**0.228**	**5.80**	**3.32**	**14.75**	**5.40**	**0.95**
C0375-030-1000-M	**0.375**	**9.53**	**0.030**	**0.76**	**1.000**	**25.40**	**0.365**	**9.28**	**0.266**	**6.76**	**2.79**	**12.42**	**4.40**	**0.77**
C0375-030-1130-M	**0.375**	**9.53**	**0.030**	**0.76**	**1.130**	**28.70**	**0.427**	**10.85**	**0.318**	**8.08**	**2.46**	**10.94**	**3.50**	**0.61**
C0375-030-1190-M	**0.375**	**9.53**	**0.030**	**0.76**	**1.190**	**30.23**	**0.436**	**11.08**	**0.318**	**8.08**	**2.64**	**11.74**	**3.50**	**0.61**
C0375-030-1380-M	**0.375**	**9.53**	**0.030**	**0.76**	**1.380**	**35.05**	**0.453**	**11.52**	**0.304**	**7.73**	**3.43**	**15.25**	**3.70**	**0.65**
C0375-030-1500-M	**0.375**	**9.53**	**0.030**	**0.76**	**1.500**	**38.10**	**0.554**	**14.07**	**0.407**	**10.33**	**2.46**	**10.94**	**2.60**	**0.46**
C0375-030-2000-M	**0.375**	**9.53**	**0.030**	**0.76**	**2.000**	**50.80**	**0.713**	**18.10**	**0.510**	**12.94**	**2.57**	**11.45**	**2.00**	**0.35**
C0375-030-2190-M	**0.375**	**9.53**	**0.030**	**0.76**	**2.190**	**55.63**	**0.798**	**20.26**	**0.407**	**10.33**	**3.62**	**16.10**	**2.60**	**0.46**
C0375-032-0375-M	**0.375**	**9.53**	**0.032**	**0.81**	**0.375**	**9.53**	**0.167**	**4.24**	**0.137**	**3.48**	**3.43**	**15.24**	**16.48**	**2.88**
C0375-032-0500-M	**0.375**	**9.53**	**0.032**	**0.81**	**0.500**	**12.70**	**0.213**	**5.42**	**0.171**	**4.34**	**3.37**	**14.98**	**11.75**	**2.06**
C0375-032-0563-M	**0.375**	**9.53**	**0.032**	**0.81**	**0.563**	**14.30**	**0.237**	**6.01**	**0.188**	**4.78**	**3.35**	**14.91**	**10.27**	**1.80**
C0375-032-0625-M	**0.375**	**9.53**	**0.032**	**0.81**	**0.625**	**15.88**	**0.259**	**6.59**	**0.205**	**5.20**	**3.34**	**14.85**	**9.13**	**1.60**
C0375-032-0688-M	**0.375**	**9.53**	**0.032**	**0.81**	**0.688**	**17.48**	**0.281**	**7.15**	**0.220**	**5.59**	**3.34**	**14.85**	**8.21**	**1.44**
C0375-032-0750-M	**0.375**	**9.53**	**0.032**	**0.81**	**0.750**	**19.05**	**0.303**	**7.69**	**0.235**	**5.97**	**3.34**	**14.86**	**7.47**	**1.31**
C0375-032-0813-M	**0.375**	**9.53**	**0.032**	**0.81**	**0.813**	**20.65**	**0.325**	**8.25**	**0.251**	**6.37**	**3.34**	**14.85**	**6.84**	**1.20**
C0375-032-0875-M	**0.375**	**9.53**	**0.032**	**0.81**	**0.875**	**22.23**	**0.346**	**8.80**	**0.266**	**6.75**	**3.34**	**14.86**	**6.32**	**1.11**
C0375-032-0938-M	**0.375**	**9.53**	**0.032**	**0.81**	**0.938**	**23.83**	**0.368**	**9.36**	**0.281**	**7.15**	**3.34**	**14.85**	**5.86**	**1.03**
C0375-032-1000-M	**0.375**	**9.53**	**0.032**	**0.81**	**1.000**	**25.40**	**0.390**	**9.91**	**0.297**	**7.53**	**3.34**	**14.84**	**5.47**	**0.96**
C0375-032-1125-M	**0.375**	**9.53**	**0.032**	**0.81**	**1.125**	**28.58**	**0.434**	**11.01**	**0.327**	**8.31**	**3.34**	**14.86**	**4.83**	**0.85**
C0375-032-1250-M	**0.375**	**9.53**	**0.032**	**0.81**	**1.250**	**31.75**	**0.477**	**12.12**	**0.358**	**9.09**	**3.34**	**14.85**	**4.32**	**0.76**
C0375-032-1375-M	**0.375**	**9.53**	**0.032**	**0.81**	**1.375**	**34.93**	**0.520**	**13.22**	**0.388**	**9.86**	**3.34**	**14.86**	**3.91**	**0.68**
C0375-032-1500-M	**0.375**	**9.53**	**0.032**	**0.81**	**1.500**	**38.10**	**0.564**	**14.33**	**0.419**	**10.64**	**3.34**	**14.86**	**3.57**	**0.62**
C0375-032-1750-M	**0.375**	**9.53**	**0.032**	**0.81**	**1.750**	**44.45**	**0.651**	**16.54**	**0.480**	**12.19**	**3.34**	**14.86**	**3.04**	**0.53**
C0375-032-2000-M	**0.375**	**9.53**	**0.032**	**0.81**	**2.000**	**50.80**	**0.738**	**18.74**	**0.541**	**13.74**	**3.34**	**14.88**	**2.65**	**0.46**
C0375-032-2250-M	**0.375**	**9.53**	**0.032**	**0.81**	**2.250**	**57.15**	**0.826**	**20.98**	**0.604**	**15.33**	**3.33**	**14.82**	**2.34**	**0.41**
C0375-032-2500-M	**0.375**	**9.53**	**0.032**	**0.81**	**2.500**	**63.50**	**0.913**	**23.20**	**0.665**	**16.89**	**3.33**	**14.82**	**2.10**	**0.37**
C0375-035-0438-M	**0.375**	**9.53**	**0.035**	**0.89**	**0.438**	**11.13**	**0.213**	**5.42**	**0.182**	**4.63**	**4.02**	**17.89**	**17.90**	**3.13**
C0375-035-0500-M	**0.375**	**9.53**	**0.035**	**0.89**	**0.500**	**12.70**	**0.240**	**6.09**	**0.203**	**5.17**	**3.99**	**17.74**	**15.32**	**2.68**
C0375-035-0563-M	**0.375**	**9.53**	**0.035**	**0.89**	**0.563**	**14.30**	**0.266**	**6.76**	**0.224**	**5.70**	**3.97**	**17.64**	**13.36**	**2.34**
C0375-035-0625-M	**0.375**	**9.53**	**0.035**	**0.89**	**0.625**	**15.88**	**0.291**	**7.39**	**0.243**	**6.18**	**3.97**	**17.65**	**11.87**	**2.08**
C0375-035-0688-M	**0.375**	**9.53**	**0.035**	**0.89**	**0.688**	**17.48**	**0.316**	**8.02**	**0.263**	**6.67**	**3.97**	**17.65**	**10.66**	**1.87**
C0375-035-0750-M	**0.375**	**9.53**	**0.035**	**0.89**	**0.750**	**19.05**	**0.341**	**8.65**	**0.282**	**7.16**	**3.96**	**17.62**	**9.68**	**1.69**
C0375-035-0813-M	**0.375**	**9.53**	**0.035**	**0.89**	**0.813**	**20.65**	**0.366**	**9.29**	**0.301**	**7.65**	**3.96**	**17.63**	**8.86**	**1.55**
C0375-035-0875-M	**0.375**	**9.53**	**0.035**	**0.89**	**0.875**	**22.23**	**0.390**	**9.92**	**0.320**	**8.13**	**3.96**	**17.63**	**8.18**	**1.43**
C0375-035-0938-M	**0.375**	**9.53**	**0.035**	**0.89**	**0.938**	**23.83**	**0.415**	**10.55**	**0.339**	**8.62**	**3.97**	**17.65**	**7.59**	**1.33**
C0375-035-1000-M	**0.375**	**9.53**	**0.035**	**0.89**	**1.000**	**25.40**	**0.440**	**11.18**	**0.358**	**9.10**	**3.96**	**17.63**	**7.08**	**1.24**
C0375-035-1125-M	**0.375**	**9.53**	**0.035**	**0.89**	**1.125**	**28.58**	**0.490**	**12.44**	**0.397**	**10.08**	**3.96**	**17.63**	**6.24**	**1.09**
C0375-035-1250-M	**0.375**	**9.53**	**0.035**	**0.89**	**1.250**	**31.75**	**0.540**	**13.71**	**0.435**	**11.05**	**3.96**	**17.63**	**5.58**	**0.98**
C0375-035-1375-M	**0.375**	**9.53**	**0.035**	**0.89**	**1.375**	**34.93**	**0.589**	**14.96**	**0.473**	**12.01**	**3.97**	**17.65**	**5.05**	**0.88**
C0375-035-1500-M	**0.375**	**9.53**	**0.035**	**0.89**	**1.500**	**38.10**	**0.639**	**16.22**	**0.511**	**12.98**	**3.97**	**17.66**	**4.61**	**0.81**
C0375-035-1750-M	**0.375**	**9.53**	**0.035**	**0.89**	**1.750**	**44.45**	**0.739**	**18.76**	**0.588**	**14.94**	**3.96**	**17.64**	**3.92**	**0.69**
C0375-035-2000-M	**0.375**	**9.53**	**0.035**	**0.89**	**2.000**	**50.80**	**0.838**	**21.29**	**0.665**	**16.89**	**3.96**	**17.62**	**3.41**	**0.60**
C0375-035-2250-M	**0.375**	**9.53**	**0.035**	**0.89**	**2.250**	**57.15**	**0.938**	**23.82**	**0.741**	**18.83**	**3.96**	**17.63**	**3.02**	**0.53**
C0375-035-2500-M	**0.375**	**9.53**	**0.035**	**0.89**	**2.500**	**63.50**	**1.037**	**26.34**	**0.818**	**20.77**	**3.96**	**17.64**	**2.71**	**0.47**
D12350	0.378	9.60	0.063	1.60	0.571	14.50	0.354	9.00	0.346	8.80	47.62	211.82	212.97	37.27
D12360	0.378	9.60	0.063	1.60	0.846	21.50	0.496	12.60	0.472	12.00	47.62	211.82	135.60	23.73
D12370	0.378	9.60	0.063	1.60	1.240	31.50	0.705	17.90	0.661	16.80	47.62	211.82	88.00	15.40
D12380	0.378	9.60	0.063	1.60	1.772	45.00	0.976	24.80	0.913	23.20	47.62	211.82	59.43	10.40
D12390	0.378	9.60	0.063	1.60	2.579	65.50	1.386	35.20	1.291	32.80	47.62	211.82	40.29	7.05
C0390-043-0500-M	0.390	9.91	0.043	1.09	0.500	12.70	0.291	7.39	0.241	6.12	9.45	42.04	45.30	7.93
C0390-043-0560-M	0.390	9.91	0.043	1.09	0.560	14.22	0.321	8.15	0.257	6.53	9.45	42.04	39.60	6.93
C0390-043-0620-M	0.390	9.91	0.043	1.09	0.620	15.75	0.351	8.92	0.273	6.93	9.45	42.04	35.10	6.14
C0390-043-0690-M	0.390	9.91	0.043	1.09	0.690	17.53	0.386	9.80	0.292	7.42	9.45	42.04	31.00	5.43
C0390-043-0750-M	0.390	9.91	0.043	1.09	0.750	19.05	0.415	10.54	0.308	7.82	9.45	42.04	28.20	4.94

STAINLESS STEEL

Catalog #	Load Length (L_1)		Load (P) at L_1		Spring Rate (R)	
	in	mm	lb	N	lb/in	N/mm
C0375-026-0938-S	**0.293**	**7.45**	**1.69**	**7.52**	**2.62**	**0.46**
C0375-026-1000-S	**0.310**	**7.87**	**1.70**	**7.54**	**2.46**	**0.43**
C0375-026-1125-S	**0.344**	**8.75**	**1.69**	**7.52**	**2.17**	**0.38**
C0375-026-1250-S	**0.378**	**9.61**	**1.69**	**7.53**	**1.94**	**0.34**
C0375-026-1500-S	**0.446**	**11.33**	**1.69**	**7.54**	**1.61**	**0.28**
C0375-026-1750-S	**0.514**	**13.05**	**1.70**	**7.56**	**1.37**	**0.24**
C0375-026-2000-S	**0.583**	**14.81**	**1.69**	**7.51**	**1.19**	**0.21**
C0375-026-2250-S	**0.651**	**16.53**	**1.69**	**7.53**	**1.06**	**0.19**
C0375-030-0630-S	**0.299**	**7.60**	**1.29**	**5.76**	**3.92**	**0.69**
C0375-030-0880-S	**0.359**	**9.13**	**1.78**	**7.91**	**3.42**	**0.60**
C0375-030-0940-S	**0.332**	**8.42**	**2.74**	**12.17**	**4.50**	**0.79**
C0375-030-1000-S	**0.365**	**9.28**	**2.33**	**10.35**	**3.67**	**0.64**
C0375-030-1130-S	**0.427**	**10.85**	**2.05**	**9.12**	**2.92**	**0.51**
C0375-030-1190-S	**0.436**	**11.08**	**2.20**	**9.78**	**2.92**	**0.51**
C0375-030-1380-S	**0.492**	**12.50**	**2.74**	**12.17**	**3.08**	**0.54**
C0375-030-1500-S	**0.554**	**14.07**	**2.05**	**9.11**	**2.17**	**0.38**
C0375-030-2000-S	**0.713**	**18.10**	**2.14**	**9.54**	**1.67**	**0.29**
C0375-030-2190-S	**0.926**	**23.53**	**2.74**	**12.17**	**2.17**	**0.38**
C0375-032-0375-S	**0.167**	**4.24**	**2.85**	**12.70**	**13.73**	**2.40**
C0375-032-0500-S	**0.213**	**5.42**	**2.81**	**12.48**	**9.79**	**1.71**
C0375-032-0563-S	**0.237**	**6.01**	**2.79**	**12.42**	**8.56**	**1.50**
C0375-032-0625-S	**0.259**	**6.59**	**2.78**	**12.37**	**7.61**	**1.33**
C0375-032-0688-S	**0.281**	**7.15**	**2.78**	**12.37**	**6.84**	**1.20**
C0375-032-0750-S	**0.303**	**7.69**	**2.78**	**12.38**	**6.22**	**1.09**
C0375-032-0813-S	**0.325**	**8.25**	**2.78**	**12.37**	**5.70**	**1.00**
C0375-032-0875-S	**0.346**	**8.80**	**2.78**	**12.38**	**5.27**	**0.92**
C0375-032-0938-S	**0.368**	**9.36**	**2.78**	**12.37**	**4.88**	**0.85**
C0375-032-1000-S	**0.390**	**9.91**	**2.78**	**12.36**	**4.56**	**0.80**
C0375-032-1125-S	**0.434**	**11.01**	**2.78**	**12.38**	**4.02**	**0.70**
C0375-032-1250-S	**0.477**	**12.12**	**2.78**	**12.37**	**3.60**	**0.63**
C0375-032-1375-S	**0.520**	**13.22**	**2.78**	**12.38**	**3.26**	**0.57**
C0375-032-1500-S	**0.564**	**14.33**	**2.78**	**12.38**	**2.97**	**0.52**
C0375-032-1750-S	**0.651**	**16.54**	**2.78**	**12.38**	**2.53**	**0.44**
C0375-032-2000-S	**0.738**	**18.74**	**2.79**	**12.39**	**2.21**	**0.39**
C0375-032-2250-S	**0.826**	**20.98**	**2.78**	**12.35**	**1.95**	**0.34**
C0375-032-2500-S	**0.913**	**23.20**	**2.78**	**12.35**	**1.75**	**0.31**
C0375-035-0438-S	**0.213**	**5.42**	**3.35**	**14.90**	**14.91**	**2.61**
C0375-035-0500-S	**0.240**	**6.09**	**3.32**	**14.78**	**12.76**	**2.23**
C0375-035-0563-S	**0.266**	**6.76**	**3.30**	**14.69**	**11.13**	**1.95**
C0375-035-0625-S	**0.291**	**7.39**	**3.30**	**14.70**	**9.89**	**1.73**
C0375-035-0688-S	**0.316**	**8.02**	**3.30**	**14.70**	**8.88**	**1.55**
C0375-035-0750-S	**0.341**	**8.65**	**3.30**	**14.68**	**8.06**	**1.41**
C0375-035-0813-S	**0.366**	**9.29**	**3.30**	**14.68**	**7.38**	**1.29**
C0375-035-0875-S	**0.390**	**9.92**	**3.30**	**14.69**	**6.81**	**1.19**
C0375-035-0938-S	**0.415**	**10.55**	**3.30**	**14.70**	**6.32**	**1.11**
C0375-035-1000-S	**0.440**	**11.18**	**3.30**	**14.69**	**5.90**	**1.03**
C0375-035-1125-S	**0.490**	**12.44**	**3.30**	**14.68**	**5.20**	**0.91**
C0375-035-1250-S	**0.540**	**13.71**	**3.30**	**14.69**	**4.65**	**0.81**
C0375-035-1375-S	**0.589**	**14.96**	**3.31**	**14.71**	**4.21**	**0.74**
C0375-035-1500-S	**0.639**	**16.22**	**3.31**	**14.71**	**3.84**	**0.67**
C0375-035-1750-S	**0.739**	**18.76**	**3.30**	**14.69**	**3.27**	**0.57**
C0375-035-2000-S	**0.838**	**21.29**	**3.30**	**14.68**	**2.84**	**0.50**
C0375-035-2250-S	**0.938**	**23.82**	**3.30**	**14.69**	**2.52**	**0.44**
C0375-035-2500-S	**1.037**	**26.34**	**3.30**	**14.69**	**2.26**	**0.39**
D22350	0.354	9.00	39.67	176.45	177.43	31.05
D22360	0.496	12.60	39.67	176.45	112.97	19.77
D22370	0.705	17.90	39.67	176.45	73.31	12.83
D22380	0.976	24.80	39.67	176.45	49.49	8.66
D22390	1.386	35.20	39.67	176.45	33.54	5.87
C0390-043-0500-S	0.335	8.52	6.21	27.62	37.74	6.60
C0390-043-0560-S	0.372	9.44	6.21	27.62	32.99	5.77
C0390-043-0620-S	0.408	10.35	6.21	27.62	29.24	5.12
C0390-043-0690-S	0.450	11.42	6.21	27.62	25.82	4.52
C0390-043-0750-S	0.486	12.34	6.21	27.62	23.49	4.11

FOR INFORMATION ON ALTERNATIVE FINISHES, SEE PAGE 311

Part Numbers with an "*" are squared and not ground. **Part Numbers in bold** represent the newly expanded Associated Spring RAYMOND compression spring offering.

MUSIC WIRE														
Catalog #	Outside Diameter (OD)		Wire Diameter (d)		Free Length (L) Approx		Load Length (L_1)		Solid Height (Sh) Approx		Load (P) at L_1		Spring Rate (R)	
	in	mm	in	mm	in	mm	in	mm	in	mm	lb	N	lb/in	N/mm
C0390-043-0810-M	0.390	9.91	0.043	1.09	0.810	20.57	0.445	11.30	0.324	8.23	9.45	42.04	25.90	4.53
C0390-043-0880-M	0.390	9.91	0.043	1.09	0.880	22.35	0.480	12.19	0.343	8.71	9.45	42.04	23.60	4.13
C0390-043-0940-M	0.390	9.91	0.043	1.09	0.940	23.88	0.513	13.03	0.359	9.12	9.45	42.04	22.10	3.87
C0390-043-1000-M	0.390	9.91	0.043	1.09	1.000	25.40	0.539	13.69	0.376	9.55	9.45	42.04	20.50	3.59
C0390-043-1120-M	0.390	9.91	0.043	1.09	1.120	28.45	0.599	15.21	0.408	10.36	9.45	42.04	18.10	3.17
C0390-043-1250-M	0.390	9.91	0.043	1.09	1.250	31.75	0.664	16.87	0.443	11.25	9.45	42.04	16.10	2.82
C0390-043-1380-M	0.390	9.91	0.043	1.09	1.380	35.05	0.728	18.49	0.478	12.14	9.45	42.04	14.50	2.54
C0390-043-1500-M	0.390	9.91	0.043	1.09	1.500	38.10	0.788	20.02	0.510	12.95	9.45	42.04	13.30	2.33
C0390-043-1750-M	0.390	9.91	0.043	1.09	1.750	44.45	0.912	23.16	0.578	14.68	9.45	42.04	11.30	1.98
C0390-043-2000-M	0.390	9.91	0.043	1.09	2.000	50.80	1.036	26.31	0.645	16.38	9.45	42.04	9.80	1.72
C0390-047-0500-M	0.390	9.91	0.047	1.19	0.500	12.70	0.309	7.85	0.270	6.86	12.10	53.82	63.30	11.08
C0390-047-0560-M	0.390	9.91	0.047	1.19	0.560	14.22	0.341	8.66	0.289	7.34	12.10	53.82	55.20	9.66
C0390-047-0620-M	0.390	9.91	0.047	1.19	0.620	15.75	0.372	9.45	0.308	7.82	12.10	53.82	48.90	8.56
C0390-047-0690-M	0.390	9.91	0.047	1.19	0.690	17.53	0.409	10.39	0.330	8.38	12.10	53.82	43.10	7.54
C0390-047-0750-M	0.390	9.91	0.047	1.19	0.750	19.05	0.441	11.20	0.350	8.89	12.10	53.82	39.20	6.86
C0390-047-0810-M	0.390	9.91	0.047	1.19	0.810	20.57	0.473	12.01	0.369	9.37	12.10	53.82	35.90	6.28
C0390-047-0880-M	0.390	9.91	0.047	1.19	0.880	22.35	0.510	12.95	0.391	9.93	12.10	53.82	32.70	5.72
C0390-047-0940-M	0.390	9.91	0.047	1.19	0.940	23.88	0.542	13.77	0.410	10.41	12.10	53.82	30.40	5.32
C0390-047-1000-M	0.390	9.91	0.047	1.19	1.000	25.40	0.574	14.58	0.429	10.90	12.10	53.82	28.40	4.97
C0390-047-1120-M	0.390	9.91	0.047	1.19	1.120	28.45	0.637	16.18	0.467	11.86	12.10	53.82	25.10	4.39
C0390-047-1250-M	0.390	9.91	0.047	1.19	1.250	31.75	0.706	17.93	0.508	12.90	12.10	53.82	22.20	3.89
C0390-047-1380-M	0.390	9.91	0.047	1.19	1.380	35.05	0.775	19.69	0.550	13.97	12.10	53.82	20.00	3.50
C0390-047-1500-M	0.390	9.91	0.047	1.19	1.500	38.10	0.838	21.29	0.588	14.94	12.10	53.82	18.30	3.20
C0390-047-1750-M	0.390	9.91	0.047	1.19	1.750	44.45	0.971	24.66	0.667	16.94	12.10	53.82	15.50	2.71
C0390-047-2000-M	0.390	9.91	0.047	1.19	2.000	50.80	1.103	28.02	0.747	18.97	12.10	53.82	13.50	2.36
C0411-035-0813-M	**0.411**	**10.44**	**0.035**	**0.89**	**0.813**	**20.64**	**0.306**	**7.79**	**0.228**	**5.79**	**4.88**	**21.72**	**9.65**	**1.69**
C0411-035-0875-M	**0.411**	**10.44**	**0.035**	**0.89**	**0.875**	**22.23**	**0.326**	**8.29**	**0.241**	**6.12**	**4.88**	**21.72**	**8.90**	**1.56**
C0411-035-0938-M	**0.411**	**10.44**	**0.035**	**0.89**	**0.938**	**23.81**	**0.346**	**8.80**	**0.254**	**6.45**	**4.88**	**21.72**	**8.26**	**1.45**
C0411-035-1000-M	**0.411**	**10.44**	**0.035**	**0.89**	**1.000**	**25.40**	**0.366**	**9.30**	**0.267**	**6.78**	**4.88**	**21.72**	**7.70**	**1.35**
C0411-035-1125-M	**0.411**	**10.44**	**0.035**	**0.89**	**1.125**	**28.58**	**0.406**	**10.31**	**0.293**	**7.45**	**4.88**	**21.72**	**6.79**	**1.19**
C0411-035-1250-M	**0.411**	**10.44**	**0.035**	**0.89**	**1.250**	**31.75**	**0.446**	**11.32**	**0.319**	**8.11**	**4.88**	**21.72**	**6.07**	**1.06**
C0411-035-1375-M	**0.411**	**10.44**	**0.035**	**0.89**	**1.375**	**34.93**	**0.486**	**12.34**	**0.345**	**8.77**	**4.88**	**21.72**	**5.49**	**0.96**
C0411-035-1500-M	**0.411**	**10.44**	**0.035**	**0.89**	**1.500**	**38.10**	**0.525**	**13.35**	**0.371**	**9.43**	**4.88**	**21.72**	**5.01**	**0.88**
C0411-035-1625-M	**0.411**	**10.44**	**0.035**	**0.89**	**1.625**	**41.28**	**0.565**	**14.36**	**0.397**	**10.09**	**4.88**	**21.72**	**4.61**	**0.81**
C0411-035-1750-M	**0.411**	**10.44**	**0.035**	**0.89**	**1.750**	**44.45**	**0.605**	**15.37**	**0.423**	**10.75**	**4.88**	**21.72**	**4.26**	**0.75**
C0411-035-1875-M	**0.411**	**10.44**	**0.035**	**0.89**	**1.875**	**47.63**	**0.645**	**16.38**	**0.449**	**11.41**	**4.88**	**21.72**	**3.97**	**0.69**
C0411-035-2000-M	**0.411**	**10.44**	**0.035**	**0.89**	**2.000**	**50.80**	**0.685**	**17.39**	**0.475**	**12.07**	**4.88**	**21.72**	**3.71**	**0.65**
C0411-035-2125-M	**0.411**	**10.44**	**0.035**	**0.89**	**2.125**	**53.98**	**0.725**	**18.40**	**0.501**	**12.73**	**4.88**	**21.72**	**3.49**	**0.61**
C0411-035-2250-M	**0.411**	**10.44**	**0.035**	**0.89**	**2.250**	**57.15**	**0.764**	**19.41**	**0.527**	**13.39**	**4.88**	**21.72**	**3.29**	**0.58**
C0411-035-2375-M	**0.411**	**10.44**	**0.035**	**0.89**	**2.375**	**60.33**	**0.804**	**20.43**	**0.553**	**14.05**	**4.88**	**21.72**	**3.11**	**0.54**
C0411-035-2500-M	**0.411**	**10.44**	**0.035**	**0.89**	**2.500**	**63.50**	**0.844**	**21.44**	**0.579**	**14.72**	**4.88**	**21.72**	**2.95**	**0.52**
C0411-035-2625-M	**0.411**	**10.44**	**0.035**	**0.89**	**2.625**	**66.68**	**0.884**	**22.45**	**0.605**	**15.38**	**4.88**	**21.72**	**2.80**	**0.49**
C0411-035-2750-M	**0.411**	**10.44**	**0.035**	**0.89**	**2.750**	**69.85**	**0.924**	**23.46**	**0.631**	**16.04**	**4.88**	**21.72**	**2.67**	**0.47**
C0411-035-2875-M	**0.411**	**10.44**	**0.035**	**0.89**	**2.875**	**73.03**	**0.963**	**24.47**	**0.657**	**16.70**	**4.88**	**21.72**	**2.55**	**0.45**
C0411-035-3000-M	**0.411**	**10.44**	**0.035**	**0.89**	**3.000**	**76.20**	**1.003**	**25.48**	**0.683**	**17.36**	**4.88**	**21.72**	**2.45**	**0.43**
C0411-035-3250-M	**0.411**	**10.44**	**0.035**	**0.89**	**3.250**	**82.55**	**1.083**	**27.51**	**0.735**	**18.68**	**4.88**	**21.72**	**2.25**	**0.39**
C0411-035-3500-M	**0.411**	**10.44**	**0.035**	**0.89**	**3.500**	**88.90**	**1.163**	**29.53**	**0.788**	**20.00**	**4.88**	**21.72**	**2.09**	**0.37**
C0411-035-3750-M	**0.411**	**10.44**	**0.035**	**0.89**	**3.750**	**95.25**	**1.242**	**31.55**	**0.840**	**21.32**	**4.88**	**21.72**	**1.95**	**0.34**
C0411-035-4000-M	**0.411**	**10.44**	**0.035**	**0.89**	**4.000**	**101.60**	**1.322**	**33.57**	**0.892**	**22.65**	**4.88**	**21.72**	**1.82**	**0.32**
C0411-035-4250-M	**0.411**	**10.44**	**0.035**	**0.89**	**4.250**	**107.95**	**1.401**	**35.60**	**0.944**	**23.97**	**4.88**	**21.72**	**1.71**	**0.30**
C0411-035-4500-M	**0.411**	**10.44**	**0.035**	**0.89**	**4.500**	**114.30**	**1.481**	**37.62**	**0.996**	**25.29**	**4.88**	**21.72**	**1.62**	**0.28**
C0411-035-4750-M	**0.411**	**10.44**	**0.035**	**0.89**	**4.750**	**120.65**	**1.561**	**39.64**	**1.048**	**26.61**	**4.88**	**21.72**	**1.53**	**0.27**
C0411-035-5000-M	**0.411**	**10.44**	**0.035**	**0.89**	**5.000**	**127.00**	**1.640**	**41.66**	**1.100**	**27.93**	**4.88**	**21.72**	**1.45**	**0.25**
C0411-035-5250-M	**0.411**	**10.44**	**0.035**	**0.89**	**5.250**	**133.35**	**1.720**	**43.69**	**1.152**	**29.26**	**4.88**	**21.72**	**1.38**	**0.24**
C0411-035-5500-M	**0.411**	**10.44**	**0.035**	**0.89**	**5.500**	**139.70**	**1.800**	**45.71**	**1.204**	**30.58**	**4.88**	**21.72**	**1.32**	**0.23**
C0411-035-5750-M	**0.411**	**10.44**	**0.035**	**0.89**	**5.750**	**146.05**	**1.879**	**47.73**	**1.256**	**31.90**	**4.88**	**21.72**	**1.26**	**0.22**
C0411-035-6000-M	**0.411**	**10.44**	**0.035**	**0.89**	**6.000**	**152.40**	**1.959**	**49.75**	**1.308**	**33.22**	**4.88**	**21.72**	**1.21**	**0.21**
C0411-035-6250-M	**0.411**	**10.44**	**0.035**	**0.89**	**6.250**	**158.75**	**2.038**	**51.78**	**1.360**	**34.54**	**4.88**	**21.72**	**1.16**	**0.20**
C0411-035-6500-M	**0.411**	**10.44**	**0.035**	**0.89**	**6.500**	**165.10**	**2.118**	**53.80**	**1.412**	**35.87**	**4.88**	**21.72**	**1.11**	**0.19**
C0411-035-6750-M	**0.411**	**10.44**	**0.035**	**0.89**	**6.750**	**171.45**	**2.198**	**55.82**	**1.464**	**37.19**	**4.88**	**21.72**	**1.07**	**0.19**
C0411-035-7000-M	**0.411**	**10.44**	**0.035**	**0.89**	**7.000**	**177.80**	**2.277**	**57.84**	**1.516**	**38.51**	**4.88**	**21.72**	**1.03**	**0.18**
C0411-035-7500-M	**0.411**	**10.44**	**0.035**	**0.89**	**7.500**	**190.50**	**2.437**	**61.89**	**1.620**	**41.15**	**4.88**	**21.72**	**0.96**	**0.17**
C0411-038-0750-M	**0.411**	**10.44**	**0.038**	**0.97**	**0.750**	**19.05**	**0.311**	**7.89**	**0.245**	**6.21**	**6.14**	**27.33**	**13.98**	**2.45**
C0411-038-0813-M	**0.411**	**10.44**	**0.038**	**0.97**	**0.813**	**20.64**	**0.332**	**8.44**	**0.260**	**6.60**	**6.14**	**27.33**	**12.79**	**2.24**

STAINLESS STEEL						
Catalog #	Load Length (L_1)		Load (P) at L_1		Spring Rate (R)	
	in	mm	lb	N	lb/in	N/mm
C0390-043-0810-S	0.522	13.26	6.21	27.62	21.58	3.78
C0390-043-0880-S	0.564	14.33	6.21	27.62	19.66	3.44
C0390-043-0940-S	0.603	15.31	6.21	27.62	18.41	3.22
C0390-043-1000-S	0.636	16.16	6.21	27.62	17.08	2.99
C0390-043-1120-S	0.708	17.99	6.21	27.62	15.08	2.64
C0390-043-1250-S	0.787	19.99	6.21	27.62	13.41	2.35
C0390-043-1380-S	0.866	21.99	6.21	27.62	12.08	2.11
C0390-043-1500-S	0.939	23.86	6.21	27.62	11.08	1.94
C0390-043-1750-S	1.090	27.69	6.21	27.62	9.41	1.65
C0390-043-2000-S	1.239	31.48	6.21	27.62	8.16	1.43
C0390-047-0500-S	0.350	8.89	7.91	35.20	52.73	9.23
C0390-047-0560-S	0.388	9.85	7.91	35.20	45.98	8.05
C0390-047-0620-S	0.426	10.81	7.91	35.20	40.73	7.13
C0390-047-0690-S	0.470	11.93	7.91	35.20	35.90	6.28
C0390-047-0750-S	0.508	12.90	7.91	35.20	32.65	5.71
C0390-047-0810-S	0.545	13.85	7.91	35.20	29.91	5.23
C0390-047-0880-S	0.590	14.97	7.91	35.20	27.24	4.77
C0390-047-0940-S	0.628	15.94	7.91	35.20	25.32	4.43
C0390-047-1000-S	0.666	16.90	7.91	35.20	23.66	4.14
C0390-047-1120-S	0.742	18.84	7.91	35.20	20.91	3.66
C0390-047-1250-S	0.822	20.88	7.91	35.20	18.49	3.24
C0390-047-1380-S	0.905	22.99	7.91	35.20	16.66	2.92
C0390-047-1500-S	0.981	24.92	7.91	35.20	15.24	2.67
C0390-047-1750-S	1.137	28.88	7.91	35.20	12.91	2.26
C0390-047-2000-S	1.296	32.93	7.91	35.20	11.25	1.97
C0411-035-0813-S	**0.351**	**8.91**	**3.87**	**17.23**	**8.39**	**1.47**
C0411-035-0875-S	**0.374**	**9.51**	**3.87**	**17.23**	**7.74**	**1.35**
C0411-035-0938-S	**0.398**	**10.11**	**3.87**	**17.23**	**7.18**	**1.26**
C0411-035-1000-S	**0.422**	**10.71**	**3.87**	**17.23**	**6.70**	**1.17**
C0411-035-1125-S	**0.469**	**11.91**	**3.87**	**17.23**	**5.91**	**1.03**
C0411-035-1250-S	**0.516**	**13.11**	**3.87**	**17.23**	**5.28**	**0.92**
C0411-035-1375-S	**0.563**	**14.31**	**3.87**	**17.23**	**4.77**	**0.84**
C0411-035-1500-S	**0.611**	**15.51**	**3.87**	**17.23**	**4.36**	**0.76**
C0411-035-1625-S	**0.658**	**16.71**	**3.87**	**17.23**	**4.01**	**0.70**
C0411-035-1750-S	**0.705**	**17.91**	**3.87**	**17.23**	**3.71**	**0.65**
C0411-035-1875-S	**0.753**	**19.11**	**3.87**	**17.23**	**3.45**	**0.60**
C0411-035-2000-S	**0.800**	**20.32**	**3.87**	**17.23**	**3.23**	**0.56**
C0411-035-2125-S	**0.847**	**21.52**	**3.87**	**17.23**	**3.03**	**0.53**
C0411-035-2250-S	**0.894**	**22.72**	**3.87**	**17.23**	**2.86**	**0.50**
C0411-035-2375-S	**0.942**	**23.92**	**3.87**	**17.23**	**2.70**	**0.47**
C0411-035-2500-S	**0.989**	**25.12**	**3.87**	**17.23**	**2.56**	**0.45**
C0411-035-2625-S	**1.036**	**26.32**	**3.87**	**17.23**	**2.44**	**0.43**
C0411-035-2750-S	**1.083**	**27.52**	**3.87**	**17.23**	**2.33**	**0.41**
C0411-035-2875-S	**1.131**	**28.72**	**3.87**	**17.23**	**2.22**	**0.39**
C0411-035-3000-S	**1.178**	**29.92**	**3.87**	**17.23**	**2.13**	**0.37**
C0411-035-3250-S	**1.272**	**32.32**	**3.87**	**17.23**	**1.96**	**0.34**
C0411-035-3500-S	**1.367**	**34.72**	**3.87**	**17.23**	**1.82**	**0.32**
C0411-035-3750-S	**1.462**	**37.12**	**3.87**	**17.23**	**1.69**	**0.30**
C0411-035-4000-S	**1.556**	**39.52**	**3.87**	**17.23**	**1.59**	**0.28**
C0411-035-4250-S	**1.651**	**41.93**	**3.87**	**17.23**	**1.49**	**0.26**
C0411-035-4500-S	**1.745**	**44.33**	**3.87**	**17.23**	**1.41**	**0.25**
C0411-035-4750-S	**1.840**	**46.73**	**3.87**	**17.23**	**1.33**	**0.23**
C0411-035-5000-S	**1.934**	**49.13**	**3.87**	**17.23**	**1.26**	**0.22**
C0411-035-5250-S	**2.029**	**51.53**	**3.87**	**17.23**	**1.20**	**0.21**
C0411-035-5500-S	**2.123**	**53.93**	**3.87**	**17.23**	**1.15**	**0.20**
C0411-035-5750-S	**2.218**	**56.33**	**3.87**	**17.23**	**1.10**	**0.19**
C0411-035-6000-S	**2.312**	**58.73**	**3.87**	**17.23**	**1.05**	**0.18**
C0411-035-6250-S	**2.407**	**61.14**	**3.87**	**17.23**	**1.01**	**0.18**
C0411-035-6500-S	**2.501**	**63.54**	**3.87**	**17.23**	**0.97**	**0.17**
C0411-035-6750-S	**2.596**	**65.94**	**3.87**	**17.23**	**0.93**	**0.16**
C0411-035-7000-S	**2.691**	**68.34**	**3.87**	**17.23**	**0.90**	**0.16**
C0411-035-7500-S	**2.880**	**73.14**	**3.87**	**17.23**	**0.84**	**0.15**
C0411-038-0750-S	**0.348**	**8.85**	**4.88**	**21.71**	**12.16**	**2.13**
C0411-038-0813-S	**0.374**	**9.49**	**4.88**	**21.71**	**11.12**	**1.95**

Part Numbers with an "*" are squared and not ground. **Part Numbers in bold** represent the newly expanded Associated Spring RAYMOND compression spring offering.

MUSIC WIRE															STAINLESS STEEL					
Catalog #	Outside Diameter (OD)		Wire Diameter (d)		Free Length (L) Approx		Load Length (L_1)		Solid Height (Sh) Approx		Load (P) at L_1		Spring Rate (R)		Catalog #	Load Length (L_1)		Load (P) at L_1		Spring Rate (R)	
	in	mm	in	mm	in	mm	in	mm	in	mm	lb	N	lb/in	N/mm		in	mm	lb	N	lb/in	N/mm
C0411-038-0875-M	0.411	10.44	0.038	0.97	0.875	22.23	0.354	8.99	0.275	6.99	6.14	27.33	11.79	2.06	**C0411-038-0875-S**	0.399	10.13	4.88	21.71	10.25	1.79
C0411-038-0938-M	0.411	10.44	0.038	0.97	0.938	23.81	0.376	9.55	0.291	7.38	6.14	27.33	10.94	1.91	**C0411-038-0938-S**	0.424	10.78	4.88	21.71	9.51	1.66
C0411-038-1000-M	0.411	10.44	0.038	0.97	1.000	25.40	0.398	10.10	0.306	7.77	6.14	27.33	10.20	1.78	**C0411-038-1000-S**	0.450	11.42	4.88	21.71	8.87	1.55
C0411-038-1125-M	0.411	10.44	0.038	0.97	1.125	28.58	0.441	11.20	0.336	8.54	6.14	27.33	8.98	1.57	**C0411-038-1125-S**	0.500	12.70	4.88	21.71	7.81	1.37
C0411-038-1250-M	0.411	10.44	0.038	0.97	1.250	31.75	0.485	12.31	0.367	9.32	6.14	27.33	8.03	1.40	**C0411-038-1250-S**	0.551	13.98	4.88	21.71	6.98	1.22
C0411-038-1375-M	0.411	10.44	0.038	0.97	1.375	34.93	0.528	13.41	0.398	10.10	6.14	27.33	7.25	1.27	**C0411-038-1375-S**	0.601	15.27	4.88	21.71	6.31	1.10
C0411-038-1500-M	0.411	10.44	0.038	0.97	1.500	38.10	0.572	14.52	0.428	10.87	6.14	27.33	6.62	1.16	**C0411-038-1500-S**	0.652	16.55	4.88	21.71	5.75	1.01
C0411-038-1625-M	0.411	10.44	0.038	0.97	1.625	41.28	0.615	15.62	0.459	11.65	6.14	27.33	6.08	1.06	**C0411-038-1625-S**	0.702	17.83	4.88	21.71	5.29	0.93
C0411-038-1750-M	0.411	10.44	0.038	0.97	1.750	44.45	0.659	16.73	0.489	12.43	6.14	27.33	5.63	0.98	**C0411-038-1750-S**	0.753	19.12	4.88	21.71	4.89	0.86
C0411-038-1875-M	0.411	10.44	0.038	0.97	1.875	47.63	0.702	17.83	0.520	13.20	6.14	27.33	5.24	0.92	**C0411-038-1875-S**	0.803	20.40	4.88	21.71	4.55	0.80
C0411-038-2000-M	0.411	10.44	0.038	0.97	2.000	50.80	0.746	18.94	0.550	13.98	6.14	27.33	4.90	0.86	**C0411-038-2000-S**	0.854	21.69	4.88	21.71	4.26	0.75
C0411-038-2125-M	0.411	10.44	0.038	0.97	2.125	53.98	0.789	20.04	0.581	14.76	6.14	27.33	4.60	0.80	**C0411-038-2125-S**	0.904	22.97	4.88	21.71	4.00	0.70
C0411-038-2250-M	0.411	10.44	0.038	0.97	2.250	57.15	0.833	21.15	0.612	15.53	6.14	27.33	4.33	0.76	**C0411-038-2250-S**	0.955	24.25	4.88	21.71	3.77	0.66
C0411-038-2375-M	0.411	10.44	0.038	0.97	2.375	60.33	0.876	22.25	0.642	16.31	6.14	27.33	4.10	0.72	**C0411-038-2375-S**	1.005	25.54	4.88	21.71	3.56	0.62
C0411-038-2500-M	0.411	10.44	0.038	0.97	2.500	63.50	0.920	23.36	0.673	17.09	6.14	27.33	3.89	0.68	**C0411-038-2500-S**	1.056	26.82	4.88	21.71	3.38	0.59
C0411-038-2625-M	0.411	10.44	0.038	0.97	2.625	66.68	0.963	24.46	0.703	17.86	6.14	27.33	3.70	0.65	**C0411-038-2625-S**	1.106	28.10	4.88	21.71	3.21	0.56
C0411-038-2750-M	0.411	10.44	0.038	0.97	2.750	69.85	1.007	25.57	0.734	18.64	6.14	27.33	3.52	0.62	**C0411-038-2750-S**	1.157	29.39	4.88	21.71	3.06	0.54
C0411-038-2875-M	0.411	10.44	0.038	0.97	2.875	73.03	1.050	26.67	0.764	19.42	6.14	27.33	3.37	0.59	**C0411-038-2875-S**	1.207	30.67	4.88	21.71	2.93	0.51
C0411-038-3000-M	0.411	10.44	0.038	0.97	3.000	76.20	1.094	27.78	0.795	20.19	6.14	27.33	3.22	0.56	**C0411-038-3000-S**	1.258	31.95	4.88	21.71	2.80	0.49
C0411-038-3250-M	0.411	10.44	0.038	0.97	3.250	82.55	1.181	29.99	0.856	21.75	6.14	27.33	2.97	0.52	**C0411-038-3250-S**	1.359	34.52	4.88	21.71	2.58	0.45
C0411-038-3500-M	0.411	10.44	0.038	0.97	3.500	88.90	1.268	32.20	0.917	23.30	6.14	27.33	2.75	0.48	**C0411-038-3500-S**	1.460	37.09	4.88	21.71	2.39	0.42
C0411-038-3750-M	0.411	10.44	0.038	0.97	3.750	95.25	1.355	34.41	0.978	24.85	6.14	27.33	2.56	0.45	**C0411-038-3750-S**	1.561	39.65	4.88	21.71	2.23	0.39
C0411-038-4000-M	0.411	10.44	0.038	0.97	4.000	101.60	1.442	36.62	1.040	26.41	6.14	27.33	2.40	0.42	**C0411-038-4000-S**	1.662	42.22	4.88	21.71	2.09	0.37
C0411-038-4250-M	0.411	10.44	0.038	0.97	4.250	107.95	1.529	38.83	1.101	27.96	6.14	27.33	2.26	0.39	**C0411-038-4250-S**	1.763	44.79	4.88	21.71	1.96	0.34
C0411-038-4500-M	0.411	10.44	0.038	0.97	4.500	114.30	1.616	41.04	1.162	29.51	6.14	27.33	2.13	0.37	**C0411-038-4500-S**	1.864	47.35	4.88	21.71	1.85	0.32
C0411-038-4750-M	0.411	10.44	0.038	0.97	4.750	120.65	1.703	43.25	1.223	31.07	6.14	27.33	2.02	0.35	**C0411-038-4750-S**	1.965	49.92	4.88	21.71	1.75	0.31
C0411-038-5000-M	0.411	10.44	0.038	0.97	5.000	127.00	1.790	45.46	1.284	32.62	6.14	27.33	1.91	0.33	**C0411-038-5000-S**	2.066	52.49	4.88	21.71	1.66	0.29
C0411-038-5250-M	0.411	10.44	0.038	0.97	5.250	133.35	1.877	47.67	1.345	34.17	6.14	27.33	1.82	0.32	**C0411-038-5250-S**	2.168	55.06	4.88	21.71	1.58	0.28
C0411-038-5500-M	0.411	10.44	0.038	0.97	5.500	139.70	1.964	49.88	1.407	35.73	6.14	27.33	1.74	0.30	**C0411-038-5500-S**	2.269	57.62	4.88	21.71	1.51	0.26
C0411-038-5750-M	0.411	10.44	0.038	0.97	5.750	146.05	2.051	52.09	1.468	37.28	6.14	27.33	1.66	0.29	**C0411-038-5750-S**	2.370	60.19	4.88	21.71	1.44	0.25
C0411-038-6000-M	0.411	10.44	0.038	0.97	6.000	152.40	2.138	54.30	1.529	38.83	6.14	27.33	1.59	0.28	**C0411-038-6000-S**	2.471	62.76	4.88	21.71	1.38	0.24
C0411-038-6250-M	0.411	10.44	0.038	0.97	6.250	158.75	2.225	56.51	1.590	40.38	6.14	27.33	1.53	0.27	**C0411-038-6250-S**	2.572	65.32	4.88	21.71	1.33	0.23
C0411-038-6500-M	0.411	10.44	0.038	0.97	6.500	165.10	2.312	58.71	1.651	41.94	6.14	27.33	1.47	0.26	**C0411-038-6500-S**	2.673	67.89	4.88	21.71	1.28	0.22
C0411-038-6750-M	0.411	10.44	0.038	0.97	6.750	171.45	2.399	60.92	1.712	43.49	6.14	27.33	1.41	0.25	**C0411-038-6750-S**	2.774	70.46	4.88	21.71	1.23	0.21
C0411-038-7000-M	0.411	10.44	0.038	0.97	7.000	177.80	2.486	63.13	1.773	45.04	6.14	27.33	1.36	0.24	**C0411-038-7000-S**	2.875	73.02	4.88	21.71	1.18	0.21
C0411-040-0750-M	0.411	10.44	0.040	1.02	0.750	19.05	0.327	8.30	0.265	6.72	7.09	31.52	16.75	2.93	**C0411-040-0750-S**	0.363	9.22	5.63	25.06	14.56	2.55
C0411-040-0813-M	0.411	10.44	0.040	1.02	0.813	20.64	0.350	8.89	0.282	7.15	7.09	31.52	15.32	2.68	**C0411-040-0813-S**	0.389	9.89	5.63	25.06	13.32	2.33
C0411-040-0875-M	0.411	10.44	0.040	1.02	0.875	22.23	0.373	9.47	0.298	7.58	7.09	31.52	14.11	2.47	**C0411-040-0875-S**	0.416	10.56	5.63	25.06	12.27	2.15
C0411-040-0938-M	0.411	10.44	0.040	1.02	0.938	23.81	0.396	10.06	0.315	8.01	7.09	31.52	13.09	2.29	**C0411-040-0938-S**	0.442	11.23	5.63	25.06	11.38	1.99
C0411-040-1000-M	0.411	10.44	0.040	1.02	1.000	25.40	0.419	10.64	0.332	8.44	7.09	31.52	12.20	2.13	**C0411-040-1000-S**	0.469	11.90	5.63	25.06	10.61	1.86
C0411-040-1125-M	0.411	10.44	0.040	1.02	1.125	28.58	0.465	11.81	0.366	9.29	7.09	31.52	10.74	1.88	**C0411-040-1125-S**	0.521	13.25	5.63	25.06	9.34	1.63
C0411-040-1250-M	0.411	10.44	0.040	1.02	1.250	31.75	0.511	12.98	0.400	10.15	7.09	31.52	9.59	1.68	**C0411-040-1250-S**	0.574	14.59	5.63	25.06	8.34	1.46
C0411-040-1375-M	0.411	10.44	0.040	1.02	1.375	34.93	0.557	14.15	0.433	11.01	7.09	31.52	8.66	1.52	**C0411-040-1375-S**	0.627	15.93	5.63	25.06	7.53	1.32
C0411-040-1500-M	0.411	10.44	0.040	1.02	1.500	38.10	0.603	15.32	0.467	11.86	7.09	31.52	7.90	1.38	**C0411-040-1500-S**	0.680	17.27	5.63	25.06	6.87	1.20
C0411-040-1625-M	0.411	10.44	0.040	1.02	1.625	41.28	0.649	16.49	0.501	12.72	7.09	31.52	7.26	1.27	**C0411-040-1625-S**	0.733	18.61	5.63	25.06	6.32	1.11
C0411-040-1750-M	0.411	10.44	0.040	1.02	1.750	44.45	0.695	17.66	0.534	13.58	7.09	31.52	6.72	1.18	**C0411-040-1750-S**	0.786	19.95	5.63	25.06	5.84	1.02
C0411-040-1875-M	0.411	10.44	0.040	1.02	1.875	47.63	0.741	18.83	0.568	14.43	7.09	31.52	6.25	1.09	**C0411-040-1875-S**	0.838	21.29	5.63	25.06	5.44	0.95
C0411-040-2000-M	0.411	10.44	0.040	1.02	2.000	50.80	0.787	20.00	0.602	15.29	7.09	31.52	5.84	1.02	**C0411-040-2000-S**	0.891	22.64	5.63	25.06	5.08	0.89
C0411-040-2125-M	0.411	10.44	0.040	1.02	2.125	53.98	0.833	21.17	0.636	16.15	7.09	31.52	5.49	0.96	**C0411-040-2125-S**	0.944	23.98	5.63	25.06	4.77	0.83
C0411-040-2250-M	0.411	10.44	0.040	1.02	2.250	57.15	0.879	22.34	0.669	17.00	7.09	31.52	5.17	0.90	**C0411-040-2250-S**	0.997	25.32	5.63	25.06	4.50	0.79
C0411-040-2375-M	0.411	10.44	0.040	1.02	2.375	60.33	0.925	23.51	0.703	17.86	7.09	31.52	4.89	0.86	**C0411-040-2375-S**	1.050	26.66	5.63	25.06	4.25	0.74
C0411-040-2500-M	0.411	10.44	0.040	1.02	2.500	63.50	0.971	24.68	0.737	18.72	7.09	31.52	4.64	0.81	**C0411-040-2500-S**	1.102	28.00	5.63	25.06	4.03	0.71
C0411-040-2625-M	0.411	10.44	0.040	1.02	2.625	66.68	1.018	25.84	0.771	19.57	7.09	31.52	4.41	0.77	**C0411-040-2625-S**	1.155	29.34	5.63	25.06	3.83	0.67
C0411-040-2750-M	0.411	10.44	0.040	1.02	2.750	69.85	1.064	27.01	0.804	20.43	7.09	31.52	4.20	0.74	**C0411-040-2750-S**	1.208	30.68	5.63	25.06	3.65	0.64
C0411-040-2875-M	0.411	10.44	0.040	1.02	2.875	73.03	1.110	28.18	0.838	21.28	7.09	31.52	4.01	0.70	**C0411-040-2875-S**	1.261	32.02	5.63	25.06	3.49	0.61
C0411-040-3000-M	0.411	10.44	0.040	1.02	3.000	76.20	1.156	29.35	0.872	22.14	7.09	31.52	3.84	0.67	**C0411-040-3000-S**	1.314	33.37	5.63	25.06	3.34	0.58
C0411-040-3250-M	0.411	10.44	0.040	1.02	3.250	82.55	1.248	31.69	0.939	23.85	7.09	31.52	3.54	0.62	**C0411-040-3250-S**	1.419	36.05	5.63	25.06	3.08	0.54
C0411-040-3500-M	0.411	10.44	0.040	1.02	3.500	88.90	1.340	34.03	1.007	25.57	7.09	31.52	3.28	0.57	**C0411-040-3500-S**	1.525	38.73	5.63	25.06	2.85	0.50
C0411-040-3750-M	0.411	10.44	0.040	1.02	3.750	95.25	1.432	36.37	1.074	27.28	7.09	31.52	3.06	0.53	**C0411-040-3750-S**	1.630	41.41	5.63	25.06	2.66	0.47
C0411-040-4000-M	0.411	10.44	0.040	1.02	4.000	101.60	1.524	38.71	1.141	28.99	7.09	31.52	2.86	0.50	**C0411-040-4000-S**	1.736	44.10	5.63	25.06	2.49	0.44
C0411-040-4250-M	0.411	10.44	0.040	1.02	4.250	107.95	1.616	41.05	1.209	30.71	7.09	31.52	2.69	0.47	**C0411-040-4250-S**	1.842	46.78	5.63	25.06	2.34	0.41
C0411-040-4500-M	0.411	10.44	0.040	1.02	4.500	114.30	1.708	43.39	1.276	32.42	7.09	31.52	2.54	0.44	**C0411-040-4500-S**	1.947	49.46	5.63	25.06	2.21	0.39
C0411-040-4750-M	0.411	10.44	0.040	1.02	4.750	120.65	1.800	45.73	1.344	34.13	7.09	31.52	2.40	0.42	**C0411-040-4750-S**	2.053	52.14	5.63	25.06	2.09	0.37
C0411-040-5000-M	0.411	10.44	0.040	1.02	5.000	127.00	1.892	48.07	1.411	35.84	7.09	31.52	2.28	0.40	**C0411-040-5000-S**	2.159	54.83	5.63	25.06	1.98	0.35

FOR INFORMATION ON ALTERNATIVE FINISHES, SEE PAGE 311

Part Numbers with an "*" are squared and not ground. **Part Numbers in bold** represent the newly expanded Associated Spring RAYMOND compression spring offering.

(OD) 0.411 - 0.411

MUSIC WIRE															STAINLESS STEEL					
Catalog #	Outside Diameter (OD)		Wire Diameter (d)		Free Length (L) Approx		Load Length (L_1)		Solid Height (Sh) Approx		Load (P) at L_1		Spring Rate (R)		Catalog #	Load Length (L_1)		Load (P) at L_1		Spring Rate (R)	
	in	mm	in	mm	in	mm	in	mm	in	mm	lb	N	lb/in	N/mm		in	mm	lb	N	lb/in	N/mm
C0411-040-5250-M	0.411	10.44	0.040	1.02	5.250	133.35	1.985	50.41	1.479	37.56	7.09	31.52	2.17	0.38	**C0411-040-5250-S**	2.264	57.51	5.63	25.06	1.89	0.33
C0411-040-5500-M	0.411	10.44	0.040	1.02	5.500	139.70	2.077	52.75	1.546	39.27	7.09	31.52	2.07	0.36	**C0411-040-5500-S**	2.370	60.19	5.63	25.06	1.80	0.32
C0411-040-5750-M	0.411	10.44	0.040	1.02	5.750	146.05	2.169	55.08	1.614	40.98	7.09	31.52	1.98	0.35	**C0411-040-5750-S**	2.475	62.88	5.63	25.06	1.72	0.30
C0411-040-6000-M	0.411	10.44	0.040	1.02	6.000	152.40	2.261	57.42	1.681	42.70	7.09	31.52	1.90	0.33	**C0411-040-6000-S**	2.581	65.56	5.63	25.06	1.65	0.29
C0411-040-6250-M	0.411	10.44	0.040	1.02	6.250	158.75	2.353	59.76	1.748	44.41	7.09	31.52	1.82	0.32	**C0411-040-6250-S**	2.687	68.24	5.63	25.06	1.58	0.28
C0411-040-6500-M	0.411	10.44	0.040	1.02	6.500	165.10	2.445	62.10	1.816	46.12	7.09	31.52	1.75	0.31	**C0411-040-6500-S**	2.792	70.92	5.63	25.06	1.52	0.27
C0411-040-6750-M	0.411	10.44	0.040	1.02	6.750	171.45	2.537	64.44	1.883	47.84	7.09	31.52	1.68	0.29	**C0411-040-6750-S**	2.898	73.61	5.63	25.06	1.46	0.26
C0411-040-7000-M	0.411	10.44	0.040	1.02	7.000	177.80	2.629	66.78	1.951	49.55	7.09	31.52	1.62	0.28	**C0411-040-7000-S**	3.003	76.29	5.63	25.06	1.41	0.25
C0411-042-0688-M	0.411	10.44	0.042	1.07	0.688	17.46	0.319	8.10	0.267	6.77	8.12	36.11	22.02	3.85	**C0411-042-0688-S**	0.350	8.90	6.46	28.72	19.15	3.35
C0411-042-0750-M	0.411	10.44	0.042	1.07	0.750	19.05	0.343	8.72	0.285	7.24	8.12	36.11	19.95	3.49	**C0411-042-0750-S**	0.378	9.60	6.46	28.72	17.35	3.04
C0411-042-0813-M	0.411	10.44	0.042	1.07	0.813	20.64	0.368	9.33	0.303	7.71	8.12	36.11	18.24	3.19	**C0411-042-0813-S**	0.405	10.30	6.46	28.72	15.86	2.78
C0411-042-0875-M	0.411	10.44	0.042	1.07	0.875	22.23	0.392	9.95	0.322	8.18	8.12	36.11	16.80	2.94	**C0411-042-0875-S**	0.433	11.00	6.46	28.72	14.61	2.56
C0411-042-0938-M	0.411	10.44	0.042	1.07	0.938	23.81	0.416	10.57	0.340	8.65	8.12	36.11	15.57	2.72	**C0411-042-0938-S**	0.461	11.70	6.46	28.72	13.54	2.37
C0411-042-1000-M	0.411	10.44	0.042	1.07	1.000	25.40	0.440	11.19	0.359	9.11	8.12	36.11	14.51	2.54	**C0411-042-1000-S**	0.488	12.40	6.46	28.72	12.62	2.21
C0411-042-1125-M	0.411	10.44	0.042	1.07	1.125	28.58	0.489	12.42	0.396	10.05	8.12	36.11	12.77	2.23	**C0411-042-1125-S**	0.543	13.80	6.46	28.72	11.10	1.94
C0411-042-1250-M	0.411	10.44	0.042	1.07	1.250	31.75	0.538	13.66	0.433	10.99	8.12	36.11	11.40	1.99	**C0411-042-1250-S**	0.598	15.20	6.46	28.72	9.91	1.73
C0411-042-1375-M	0.411	10.44	0.042	1.07	1.375	34.93	0.586	14.89	0.470	11.93	8.12	36.11	10.29	1.80	**C0411-042-1375-S**	0.654	16.60	6.46	28.72	8.95	1.57
C0411-042-1500-M	0.411	10.44	0.042	1.07	1.500	38.10	0.635	16.13	0.507	12.87	8.12	36.11	9.39	1.64	**C0411-042-1500-S**	0.709	18.00	6.46	28.72	8.16	1.43
C0411-042-1625-M	0.411	10.44	0.042	1.07	1.625	41.28	0.684	17.37	0.543	13.80	8.12	36.11	8.62	1.51	**C0411-042-1625-S**	0.764	19.40	6.46	28.72	7.50	1.31
C0411-042-1750-M	0.411	10.44	0.042	1.07	1.750	44.45	0.732	18.60	0.580	14.74	8.12	36.11	7.98	1.40	**C0411-042-1750-S**	0.819	20.80	6.46	28.72	6.94	1.21
C0411-042-1875-M	0.411	10.44	0.042	1.07	1.875	47.63	0.781	19.84	0.617	15.68	8.12	36.11	7.42	1.30	**C0411-042-1875-S**	0.874	22.21	6.46	28.72	6.45	1.13
C0411-042-2000-M	0.411	10.44	0.042	1.07	2.000	50.80	0.830	21.07	0.654	16.62	8.12	36.11	6.94	1.21	**C0411-042-2000-S**	0.929	23.61	6.46	28.72	6.03	1.06
C0411-042-2125-M	0.411	10.44	0.042	1.07	2.125	53.98	0.878	22.31	0.691	17.56	8.12	36.11	6.51	1.14	**C0411-042-2125-S**	0.985	25.01	6.46	28.72	5.66	0.99
C0411-042-2250-M	0.411	10.44	0.042	1.07	2.250	57.15	0.927	23.54	0.728	18.49	8.12	36.11	6.14	1.07	**C0411-042-2250-S**	1.040	26.41	6.46	28.72	5.34	0.93
C0411-042-2375-M	0.411	10.44	0.042	1.07	2.375	60.33	0.976	24.78	0.765	19.43	8.12	36.11	5.80	1.02	**C0411-042-2375-S**	1.095	27.81	6.46	28.72	5.04	0.88
C0411-042-2500-M	0.411	10.44	0.042	1.07	2.500	63.50	1.024	26.02	0.802	20.37	8.12	36.11	5.50	0.96	**C0411-042-2500-S**	1.150	29.21	6.46	28.72	4.78	0.84
C0411-042-2625-M	0.411	10.44	0.042	1.07	2.625	66.68	1.073	27.25	0.839	21.31	8.12	36.11	5.23	0.92	**C0411-042-2625-S**	1.205	30.61	6.46	28.72	4.55	0.80
C0411-042-2750-M	0.411	10.44	0.042	1.07	2.750	69.85	1.122	28.49	0.876	22.25	8.12	36.11	4.99	0.87	**C0411-042-2750-S**	1.260	32.01	6.46	28.72	4.33	0.76
C0411-042-2875-M	0.411	10.44	0.042	1.07	2.875	73.03	1.170	29.72	0.913	23.18	8.12	36.11	4.76	0.83	**C0411-042-2875-S**	1.315	33.41	6.46	28.72	4.14	0.72
C0411-042-3000-M	0.411	10.44	0.042	1.07	3.000	76.20	1.219	30.96	0.950	24.12	8.12	36.11	4.56	0.80	**C0411-042-3000-S**	1.371	34.81	6.46	28.72	3.96	0.69
C0411-042-3250-M	0.411	10.44	0.042	1.07	3.250	82.55	1.316	33.43	1.024	26.00	8.12	36.11	4.20	0.73	**C0411-042-3250-S**	1.481	37.61	6.46	28.72	3.65	0.64
C0411-042-3500-M	0.411	10.44	0.042	1.07	3.500	88.90	1.413	35.90	1.097	27.87	8.12	36.11	3.89	0.68	**C0411-042-3500-S**	1.591	40.42	6.46	28.72	3.38	0.59
C0411-042-3750-M	0.411	10.44	0.042	1.07	3.750	95.25	1.511	38.37	1.171	29.75	8.12	36.11	3.63	0.63	**C0411-042-3750-S**	1.702	43.22	6.46	28.72	3.15	0.55
C0411-042-4000-M	0.411	10.44	0.042	1.07	4.000	101.60	1.608	40.84	1.245	31.63	8.12	36.11	3.39	0.59	**C0411-042-4000-S**	1.812	46.02	6.46	28.72	2.95	0.52
C0411-042-4250-M	0.411	10.44	0.042	1.07	4.250	107.95	1.705	43.31	1.319	33.50	8.12	36.11	3.19	0.56	**C0411-042-4250-S**	1.922	48.82	6.46	28.72	2.77	0.49
C0411-042-4500-M	0.411	10.44	0.042	1.07	4.500	114.30	1.803	45.79	1.393	35.38	8.12	36.11	3.01	0.53	**C0411-042-4500-S**	2.032	51.62	6.46	28.72	2.62	0.46
C0411-042-4750-M	0.411	10.44	0.042	1.07	4.750	120.65	1.900	48.26	1.467	37.26	8.12	36.11	2.85	0.50	**C0411-042-4750-S**	2.143	54.43	6.46	28.72	2.48	0.43
C0411-042-5000-M	0.411	10.44	0.042	1.07	5.000	127.00	1.997	50.73	1.541	39.13	8.12	36.11	2.70	0.47	**C0411-042-5000-S**	2.253	57.23	6.46	28.72	2.35	0.41
C0411-042-5250-M	0.411	10.44	0.042	1.07	5.250	133.35	2.094	53.20	1.614	41.01	8.12	36.11	2.57	0.45	**C0411-042-5250-S**	2.363	60.03	6.46	28.72	2.24	0.39
C0411-042-5500-M	0.411	10.44	0.042	1.07	5.500	139.70	2.192	55.67	1.688	42.88	8.12	36.11	2.45	0.43	**C0411-042-5500-S**	2.474	62.83	6.46	28.72	2.13	0.37
C0411-042-5750-M	0.411	10.44	0.042	1.07	5.750	146.05	2.289	58.14	1.762	44.76	8.12	36.11	2.35	0.41	**C0411-042-5750-S**	2.584	65.63	6.46	28.72	2.04	0.36
C0411-042-6000-M	0.411	10.44	0.042	1.07	6.000	152.40	2.386	60.61	1.836	46.64	8.12	36.11	2.25	0.39	**C0411-042-6000-S**	2.694	68.43	6.46	28.72	1.95	0.34
C0411-042-6250-M	0.411	10.44	0.042	1.07	6.250	158.75	2.484	63.08	1.910	48.51	8.12	36.11	2.16	0.38	**C0411-042-6250-S**	2.805	71.24	6.46	28.72	1.87	0.33
C0411-042-6500-M	0.411	10.44	0.042	1.07	6.500	165.10	2.581	65.55	1.984	50.39	8.12	36.11	2.07	0.36	**C0411-042-6500-S**	2.915	74.04	6.46	28.72	1.80	0.32
C0411-042-6750-M	0.411	10.44	0.042	1.07	6.750	171.45	2.678	68.03	2.058	52.26	8.12	36.11	1.99	0.35	**C0411-042-6750-S**	3.025	76.84	6.46	28.72	1.73	0.30
C0411-042-7000-M	0.411	10.44	0.042	1.07	7.000	177.80	2.775	70.50	2.131	54.14	8.12	36.11	1.92	0.34	**C0411-042-7000-S**	3.135	79.64	6.46	28.72	1.67	0.29
C0411-045-0688-M	0.411	10.44	0.045	1.14	0.688	17.46	0.341	8.67	0.294	7.48	9.83	43.73	28.41	4.97	**C0411-045-0688-S**	0.371	9.42	7.82	34.80	24.71	4.32
C0411-045-0750-M	0.411	10.44	0.045	1.14	0.750	19.05	0.368	9.34	0.315	8.01	9.83	43.73	25.72	4.50	**C0411-045-0750-S**	0.400	10.17	7.82	34.80	22.37	3.91
C0411-045-0813-M	0.411	10.44	0.045	1.14	0.813	20.64	0.394	10.01	0.336	8.54	9.83	43.73	23.50	4.11	**C0411-045-0813-S**	0.430	10.91	7.82	34.80	20.43	3.58
C0411-045-0875-M	0.411	10.44	0.045	1.14	0.875	22.23	0.420	10.68	0.357	9.07	9.83	43.73	21.63	3.78	**C0411-045-0875-S**	0.459	11.66	7.82	34.80	18.81	3.29
C0411-045-0938-M	0.411	10.44	0.045	1.14	0.938	23.81	0.447	11.35	0.378	9.60	9.83	43.73	20.03	3.51	**C0411-045-0938-S**	0.488	12.40	7.82	34.80	17.42	3.05
C0411-045-1000-M	0.411	10.44	0.045	1.14	1.000	25.40	0.473	12.01	0.399	10.14	9.83	43.73	18.66	3.26	**C0411-045-1000-S**	0.518	13.15	7.82	34.80	16.22	2.84
C0411-045-1125-M	0.411	10.44	0.045	1.14	1.125	28.58	0.526	13.35	0.441	11.20	9.83	43.73	16.40	2.87	**C0411-045-1125-S**	0.576	14.64	7.82	34.80	14.26	2.50
C0411-045-1250-M	0.411	10.44	0.045	1.14	1.250	31.75	0.578	14.69	0.483	12.26	9.83	43.73	14.64	2.56	**C0411-045-1250-S**	0.635	16.14	7.82	34.80	12.73	2.23
C0411-045-1375-M	0.411	10.44	0.045	1.14	1.375	34.93	0.631	16.02	0.525	13.32	9.83	43.73	13.21	2.31	**C0411-045-1375-S**	0.694	17.63	7.82	34.80	11.49	2.01
C0411-045-1500-M	0.411	10.44	0.045	1.14	1.500	38.10	0.683	17.36	0.566	14.39	9.83	43.73	12.04	2.11	**C0411-045-1500-S**	0.753	19.12	7.82	34.80	10.47	1.83
C0411-045-1625-M	0.411	10.44	0.045	1.14	1.625	41.28	0.736	18.70	0.608	15.45	9.83	43.73	11.06	1.94	**C0411-045-1625-S**	0.812	20.61	7.82	34.80	9.62	1.68
C0411-045-1750-M	0.411	10.44	0.045	1.14	1.750	44.45	0.789	20.03	0.650	16.51	9.83	43.73	10.23	1.79	**C0411-045-1750-S**	0.870	22.10	7.82	34.80	8.89	1.56
C0411-045-1875-M	0.411	10.44	0.045	1.14	1.875	47.63	0.841	21.37	0.692	17.57	9.83	43.73	9.51	1.66	**C0411-045-1875-S**	0.929	23.60	7.82	34.80	8.27	1.45
C0411-045-2000-M	0.411	10.44	0.045	1.14	2.000	50.80	0.894	22.71	0.734	18.64	9.83	43.73	8.89	1.56	**C0411-045-2000-S**	0.988	25.09	7.82	34.80	7.73	1.35
C0411-045-2125-M	0.411	10.44	0.045	1.14	2.125	53.98	0.947	24.04	0.775	19.70	9.83	43.73	8.34	1.46	**C0411-045-2125-S**	1.047	26.58	7.82	34.80	7.25	1.27
C0411-045-2250-M	0.411	10.44	0.045	1.14	2.250	57.15	0.999	25.38	0.817	20.76	9.83	43.73	7.86	1.38	**C0411-045-2250-S**	1.105	28.07	7.82	34.80	6.83	1.20
C0411-045-2375-M	0.411	10.44	0.045	1.14	2.375	60.33	1.052	26.71	0.859	21.82	9.83	43.73	7.43	1.30	**C0411-045-2375-S**	1.164	29.57	7.82	34.80	6.46	1.13
C0411-045-2500-M	0.411	10.44	0.045	1.14	2.500	63.50	1.104	28.05	0.901	22.89	9.83	43.73	7.04	1.23	**C0411-045-2500-S**	1.223	31.06	7.82	34.80	6.13	1.07

Part Numbers with an "*" are squared and not ground. **Part Numbers in bold** represent the newly expanded Associated Spring RAYMOND compression spring offering.

MUSIC WIRE															STAINLESS STEEL					
Catalog #	Outside Diameter (OD)		Wire Diameter (d)		Free Length (L) Approx		Load Length (L_1)		Solid Height (Sh) Approx		Load (P) at L_1		Spring Rate (R)		Catalog #	Load Length (L_1)		Load (P) at L_1		Spring Rate (R)	
	in	mm	in	mm	in	mm	in	mm	in	mm	lb	N	lb/in	N/mm		in	mm	lb	N	lb/in	N/mm
C0411-045-2625-M	0.411	10.44	0.045	1.14	2.625	66.68	1.157	29.39	0.943	23.95	9.83	43.73	6.70	1.17	**C0411-045-2625-S**	1.282	32.55	7.82	34.80	5.82	1.02
C0411-045-2750-M	0.411	10.44	0.045	1.14	2.750	69.85	1.210	30.72	0.985	25.01	9.83	43.73	6.38	1.12	**C0411-045-2750-S**	1.340	34.04	7.82	34.80	5.55	0.97
C0411-045-2875-M	0.411	10.44	0.045	1.14	2.875	73.03	1.262	32.06	1.026	26.07	9.83	43.73	6.10	1.07	**C0411-045-2875-S**	1.399	35.54	7.82	34.80	5.30	0.93
C0411-045-3000-M	0.411	10.44	0.045	1.14	3.000	76.20	1.315	33.40	1.068	27.14	9.83	43.73	5.83	1.02	**C0411-045-3000-S**	1.458	37.03	7.82	34.80	5.07	0.89
C0411-045-3250-M	0.411	10.44	0.045	1.14	3.250	82.55	1.420	36.07	1.152	29.26	9.83	43.73	5.37	0.94	**C0411-045-3250-S**	1.575	40.01	7.82	34.80	4.67	0.82
C0411-045-3500-M	0.411	10.44	0.045	1.14	3.500	88.90	1.525	38.74	1.236	31.38	9.83	43.73	4.98	0.87	**C0411-045-3500-S**	1.693	43.00	7.82	34.80	4.33	0.76
C0411-045-3750-M	0.411	10.44	0.045	1.14	3.750	95.25	1.630	41.41	1.319	33.51	9.83	43.73	4.64	0.81	**C0411-045-3750-S**	1.810	45.98	7.82	34.80	4.03	0.71
C0411-045-4000-M	0.411	10.44	0.045	1.14	4.000	101.60	1.736	44.09	1.403	35.63	9.83	43.73	4.34	0.76	**C0411-045-4000-S**	1.928	48.97	7.82	34.80	3.78	0.66
C0411-045-4250-M	0.411	10.44	0.045	1.14	4.250	107.95	1.841	46.76	1.487	37.76	9.83	43.73	4.08	0.71	**C0411-045-4250-S**	2.045	51.95	7.82	34.80	3.55	0.62
C0411-045-4500-M	0.411	10.44	0.045	1.14	4.500	114.30	1.946	49.43	1.570	39.88	9.83	43.73	3.85	0.67	**C0411-045-4500-S**	2.163	54.94	7.82	34.80	3.35	0.59
C0411-045-4750-M	0.411	10.44	0.045	1.14	4.750	120.65	2.051	52.11	1.654	42.01	9.83	43.73	3.64	0.64	**C0411-045-4750-S**	2.280	57.92	7.82	34.80	3.17	0.55
C0411-045-5000-M	0.411	10.44	0.045	1.14	5.000	127.00	2.157	54.78	1.738	44.13	9.83	43.73	3.46	0.60	**C0411-045-5000-S**	2.398	60.91	7.82	34.80	3.01	0.53
C0411-045-5250-M	0.411	10.44	0.045	1.14	5.250	133.35	2.262	57.45	1.821	46.26	9.83	43.73	3.29	0.58	**C0411-045-5250-S**	2.515	63.89	7.82	34.80	2.86	0.50
C0411-045-5500-M	0.411	10.44	0.045	1.14	5.500	139.70	2.367	60.12	1.905	48.38	9.83	43.73	3.14	0.55	**C0411-045-5500-S**	2.633	66.88	7.82	34.80	2.73	0.48
C0411-045-5750-M	0.411	10.44	0.045	1.14	5.750	146.05	2.472	62.80	1.989	50.51	9.83	43.73	3.00	0.52	**C0411-045-5750-S**	2.750	69.86	7.82	34.80	2.61	0.46
C0411-045-6000-M	0.411	10.44	0.045	1.14	6.000	152.40	2.578	65.47	2.072	52.63	9.83	43.73	2.87	0.50	**C0411-045-6000-S**	2.868	72.85	7.82	34.80	2.50	0.44
C0411-045-6250-M	0.411	10.44	0.045	1.14	6.250	158.75	2.683	68.14	2.156	54.76	9.83	43.73	2.76	0.48	**C0411-045-6250-S**	2.985	75.83	7.82	34.80	2.40	0.42
C0411-045-6500-M	0.411	10.44	0.045	1.14	6.500	165.10	2.788	70.81	2.240	56.88	9.83	43.73	2.65	0.46	**C0411-045-6500-S**	3.103	78.81	7.82	34.80	2.30	0.40
C0411-045-6750-M	0.411	10.44	0.045	1.14	6.750	171.45	2.893	73.49	2.323	59.01	9.83	43.73	2.55	0.45	**C0411-045-6750-S**	3.220	81.80	7.82	34.80	2.22	0.39
C0411-045-7000-M	0.411	10.44	0.045	1.14	7.000	177.80	2.998	76.16	2.407	61.13	9.83	43.73	2.46	0.43	**C0411-045-7000-S**	3.338	84.78	7.82	34.80	2.14	0.37
C0411-047-0688-M	0.411	10.44	0.047	1.19	0.688	17.46	0.356	9.05	0.313	7.95	11.09	49.33	33.50	5.86	**C0411-047-0688-S**	0.385	9.77	8.83	39.26	29.13	5.10
C0411-047-0750-M	0.411	10.44	0.047	1.19	0.750	19.05	0.384	9.76	0.336	8.52	11.09	49.33	30.31	5.30	**C0411-047-0750-S**	0.415	10.54	8.83	39.26	26.35	4.61
C0411-047-0813-M	0.411	10.44	0.047	1.19	0.813	20.64	0.412	10.46	0.358	9.10	11.09	49.33	27.67	4.84	**C0411-047-0813-S**	0.446	11.32	8.83	39.26	24.06	4.21
C0411-047-0875-M	0.411	10.44	0.047	1.19	0.875	22.23	0.439	11.16	0.381	9.67	11.09	49.33	25.46	4.45	**C0411-047-0875-S**	0.476	12.10	8.83	39.26	22.14	3.87
C0411-047-0938-M	0.411	10.44	0.047	1.19	0.938	23.81	0.467	11.86	0.403	10.24	11.09	49.33	23.57	4.12	**C0411-047-0938-S**	0.507	12.88	8.83	39.26	20.50	3.59
C0411-047-1000-M	0.411	10.44	0.047	1.19	1.000	25.40	0.495	12.56	0.426	10.81	11.09	49.33	21.95	3.84	**C0411-047-1000-S**	0.538	13.65	8.83	39.26	19.08	3.34
C0411-047-1125-M	0.411	10.44	0.047	1.19	1.125	28.58	0.550	13.97	0.471	11.96	11.09	49.33	19.28	3.37	**C0411-047-1125-S**	0.599	15.21	8.83	39.26	16.77	2.93
C0411-047-1250-M	0.411	10.44	0.047	1.19	1.250	31.75	0.605	15.37	0.516	13.11	11.09	49.33	17.20	3.01	**C0411-047-1250-S**	0.660	16.76	8.83	39.26	14.96	2.62
C0411-047-1375-M	0.411	10.44	0.047	1.19	1.375	34.93	0.661	16.78	0.561	14.25	11.09	49.33	15.52	2.72	**C0411-047-1375-S**	0.721	18.32	8.83	39.26	13.50	2.36
C0411-047-1500-M	0.411	10.44	0.047	1.19	1.500	38.10	0.716	18.18	0.606	15.40	11.09	49.33	14.14	2.47	**C0411-047-1500-S**	0.782	19.87	8.83	39.26	12.30	2.15
C0411-047-1625-M	0.411	10.44	0.047	1.19	1.625	41.28	0.771	19.59	0.651	16.55	11.09	49.33	12.99	2.27	**C0411-047-1625-S**	0.843	21.42	8.83	39.26	11.29	1.98
C0411-047-1750-M	0.411	10.44	0.047	1.19	1.750	44.45	0.826	20.99	0.697	17.69	11.09	49.33	12.01	2.10	**C0411-047-1750-S**	0.905	22.98	8.83	39.26	10.44	1.83
C0411-047-1875-M	0.411	10.44	0.047	1.19	1.875	47.63	0.882	22.39	0.742	18.84	11.09	49.33	11.16	1.95	**C0411-047-1875-S**	0.966	24.53	8.83	39.26	9.71	1.70
C0411-047-2000-M	0.411	10.44	0.047	1.19	2.000	50.80	0.937	23.80	0.787	19.98	11.09	49.33	10.43	1.83	**C0411-047-2000-S**	1.027	26.09	8.83	39.26	9.07	1.59
C0411-047-2125-M	0.411	10.44	0.047	1.19	2.125	53.98	0.992	25.20	0.832	21.13	11.09	49.33	9.79	1.71	**C0411-047-2125-S**	1.088	27.64	8.83	39.26	8.51	1.49
C0411-047-2250-M	0.411	10.44	0.047	1.19	2.250	57.15	1.047	26.61	0.877	22.28	11.09	49.33	9.22	1.61	**C0411-047-2250-S**	1.149	29.20	8.83	39.26	8.02	1.40
C0411-047-2375-M	0.411	10.44	0.047	1.19	2.375	60.33	1.103	28.01	0.922	23.42	11.09	49.33	8.72	1.53	**C0411-047-2375-S**	1.211	30.75	8.83	39.26	7.58	1.33
C0411-047-2500-M	0.411	10.44	0.047	1.19	2.500	63.50	1.158	29.41	0.967	24.57	11.09	49.33	8.26	1.45	**C0411-047-2500-S**	1.272	32.30	8.83	39.26	7.19	1.26
C0411-047-2625-M	0.411	10.44	0.047	1.19	2.625	66.68	1.213	30.82	1.012	25.72	11.09	49.33	7.86	1.37	**C0411-047-2625-S**	1.333	33.86	8.83	39.26	6.83	1.20
C0411-047-2750-M	0.411	10.44	0.047	1.19	2.750	69.85	1.269	32.22	1.058	26.86	11.09	49.33	7.49	1.31	**C0411-047-2750-S**	1.394	35.41	8.83	39.26	6.51	1.14
C0411-047-2875-M	0.411	10.44	0.047	1.19	2.875	73.03	1.324	33.63	1.103	28.01	11.09	49.33	7.15	1.25	**C0411-047-2875-S**	1.455	36.97	8.83	39.26	6.22	1.09
C0411-047-3000-M	0.411	10.44	0.047	1.19	3.000	76.20	1.379	35.03	1.148	29.15	11.09	49.33	6.84	1.20	**C0411-047-3000-S**	1.517	38.52	8.83	39.26	5.95	1.04
C0411-047-3250-M	0.411	10.44	0.047	1.19	3.250	82.55	1.490	37.84	1.238	31.45	11.09	49.33	6.30	1.10	**C0411-047-3250-S**	1.639	41.63	8.83	39.26	5.48	0.96
C0411-047-3500-M	0.411	10.44	0.047	1.19	3.500	88.90	1.600	40.65	1.328	33.74	11.09	49.33	5.84	1.02	**C0411-047-3500-S**	1.761	44.74	8.83	39.26	5.08	0.89
C0411-047-3750-M	0.411	10.44	0.047	1.19	3.750	95.25	1.711	43.46	1.419	36.03	11.09	49.33	5.44	0.95	**C0411-047-3750-S**	1.884	47.85	8.83	39.26	4.73	0.83
C0411-047-4000-M	0.411	10.44	0.047	1.19	4.000	101.60	1.821	46.26	1.509	38.32	11.09	49.33	5.09	0.89	**C0411-047-4000-S**	2.006	50.96	8.83	39.26	4.43	0.77
C0411-047-4250-M	0.411	10.44	0.047	1.19	4.250	107.95	1.932	49.07	1.599	40.62	11.09	49.33	4.78	0.84	**C0411-047-4250-S**	2.128	54.06	8.83	39.26	4.16	0.73
C0411-047-4500-M	0.411	10.44	0.047	1.19	4.500	114.30	2.043	51.88	1.689	42.91	11.09	49.33	4.51	0.79	**C0411-047-4500-S**	2.251	57.17	8.83	39.26	3.92	0.69
C0411-047-4750-M	0.411	10.44	0.047	1.19	4.750	120.65	2.153	54.69	1.780	45.20	11.09	49.33	4.27	0.75	**C0411-047-4750-S**	2.373	60.28	8.83	39.26	3.71	0.65
C0411-047-5000-M	0.411	10.44	0.047	1.19	5.000	127.00	2.264	57.50	1.870	47.49	11.09	49.33	4.05	0.71	**C0411-047-5000-S**	2.496	63.39	8.83	39.26	3.52	0.62
C0411-047-5250-M	0.411	10.44	0.047	1.19	5.250	133.35	2.374	60.31	1.960	49.79	11.09	49.33	3.86	0.67	**C0411-047-5250-S**	2.618	66.50	8.83	39.26	3.35	0.59
C0411-047-5500-M	0.411	10.44	0.047	1.19	5.500	139.70	2.485	63.11	2.050	52.08	11.09	49.33	3.68	0.64	**C0411-047-5500-S**	2.740	69.61	8.83	39.26	3.20	0.56
C0411-047-5750-M	0.411	10.44	0.047	1.19	5.750	146.05	2.595	65.92	2.141	54.37	11.09	49.33	3.52	0.62	**C0411-047-5750-S**	2.863	72.72	8.83	39.26	3.06	0.53
C0411-047-6000-M	0.411	10.44	0.047	1.19	6.000	152.40	2.706	68.73	2.231	56.66	11.09	49.33	3.37	0.59	**C0411-047-6000-S**	2.985	75.82	8.83	39.26	2.93	0.51
C0411-047-6250-M	0.411	10.44	0.047	1.19	6.250	158.75	2.816	71.54	2.321	58.96	11.09	49.33	3.23	0.57	**C0411-047-6250-S**	3.108	78.93	8.83	39.26	2.81	0.49
C0411-047-6500-M	0.411	10.44	0.047	1.19	6.500	165.10	2.927	74.35	2.411	61.25	11.09	49.33	3.10	0.54	**C0411-047-6500-S**	3.230	82.04	8.83	39.26	2.70	0.47
C0411-047-6750-M	0.411	10.44	0.047	1.19	6.750	171.45	3.038	77.16	2.502	63.54	11.09	49.33	2.99	0.52	**C0411-047-6750-S**	3.352	85.15	8.83	39.26	2.60	0.45
C0411-047-7000-M	0.411	10.44	0.047	1.19	7.000	177.80	3.148	79.96	2.592	65.83	11.09	49.33	2.88	0.50	**C0411-047-7000-S**	3.475	88.26	8.83	39.26	2.50	0.44
C0411-049-0688-M	0.411	10.44	0.049	1.25	0.688	17.46	0.371	9.43	0.331	8.41	12.44	55.35	39.35	6.89	**C0411-049-0688-S**	0.398	10.11	9.90	44.05	34.22	5.99
C0411-049-0750-M	0.411	10.44	0.049	1.25	0.750	19.05	0.400	10.17	0.356	9.03	12.44	55.35	35.58	6.23	**C0411-049-0750-S**	0.430	10.92	9.90	44.05	30.94	5.41
C0411-049-0813-M	0.411	10.44	0.049	1.25	0.813	20.64	0.429	10.90	0.380	9.64	12.44	55.35	32.47	5.68	**C0411-049-0813-S**	0.462	11.73	9.90	44.05	28.23	4.94
C0411-049-0875-M	0.411	10.44	0.049	1.25	0.875	22.23	0.458	11.64	0.404	10.26	12.44	55.35	29.86	5.22	**C0411-049-0875-S**	0.494	12.54	9.90	44.05	25.96	4.54
C0411-049-0938-M	0.411	10.44	0.049	1.25	0.938	23.81	0.487	12.38	0.428	10.87	12.44	55.35	27.63	4.84	**C0411-049-0938-S**	0.525	13.35	9.90	44.05	24.03	4.21
C0411-049-1000-M	0.411	10.44	0.049	1.25	1.000	25.40	0.516	13.11	0.452	11.49	12.44	55.35	25.72	4.50	**C0411-049-1000-S**	0.557	14.15	9.90	44.05	22.36	3.91

FOR INFORMATION ON ALTERNATIVE FINISHES, SEE PAGE 311

Part Numbers with an "*" are squared and not ground. **Part Numbers in bold** represent the newly expanded Associated Spring RAYMOND compression spring offering.

(OD) 0.411 - 0.411

MUSIC WIRE															STAINLESS STEEL						
Catalog #	Outside Diameter (OD)		Wire Diameter (d)		Free Length (L) Approx		Load Length (L_1)		Solid Height (Sh) Approx		Load (P) at L_1		Spring Rate (R)		Catalog #	Load Length (L_1)		Load (P) at L_1		Spring Rate (R)	
	in	mm	in	mm	in	mm	in	mm	in	mm	lb	N	lb/in	N/mm		in	mm	lb	N	lb/in	N/mm
C0411-049-1125-M	0.411	10.44	0.049	1.25	1.125	28.58	0.574	14.58	0.501	12.72	12.44	55.35	22.59	3.95	**C0411-049-1125-S**	0.621	15.77	9.90	44.05	19.64	3.44
C0411-049-1250-M	0.411	10.44	0.049	1.25	1.250	31.75	0.632	16.06	0.549	13.95	12.44	55.35	20.14	3.52	**C0411-049-1250-S**	0.685	17.39	9.90	44.05	17.51	3.06
C0411-049-1375-M	0.411	10.44	0.049	1.25	1.375	34.93	0.690	17.53	0.598	15.18	12.44	55.35	18.17	3.18	**C0411-049-1375-S**	0.748	19.00	9.90	44.05	15.80	2.76
C0411-049-1500-M	0.411	10.44	0.049	1.25	1.500	38.10	0.748	19.00	0.646	16.41	12.44	55.35	16.55	2.90	**C0411-049-1500-S**	0.812	20.62	9.90	44.05	14.39	2.52
C0411-049-1625-M	0.411	10.44	0.049	1.25	1.625	41.28	0.806	20.47	0.695	17.64	12.44	55.35	15.19	2.66	**C0411-049-1625-S**	0.875	22.24	9.90	44.05	13.21	2.31
C0411-049-1750-M	0.411	10.44	0.049	1.25	1.750	44.45	0.864	21.94	0.743	18.87	12.44	55.35	14.04	2.46	**C0411-049-1750-S**	0.939	23.85	9.90	44.05	12.21	2.14
C0411-049-1875-M	0.411	10.44	0.049	1.25	1.875	47.63	0.922	23.42	0.791	20.10	12.44	55.35	13.06	2.28	**C0411-049-1875-S**	1.003	25.47	9.90	44.05	11.35	1.99
C0411-049-2000-M	0.411	10.44	0.049	1.25	2.000	50.80	0.980	24.89	0.840	21.33	12.44	55.35	12.20	2.13	**C0411-049-2000-S**	1.066	27.09	9.90	44.05	10.61	1.86
C0411-049-2125-M	0.411	10.44	0.049	1.25	2.125	53.98	1.038	26.36	0.888	22.56	12.44	55.35	11.45	2.00	**C0411-049-2125-S**	1.130	28.70	9.90	44.05	9.95	1.74
C0411-049-2250-M	0.411	10.44	0.049	1.25	2.250	57.15	1.096	27.83	0.937	23.79	12.44	55.35	10.78	1.89	**C0411-049-2250-S**	1.194	30.32	9.90	44.05	9.37	1.64
C0411-049-2375-M	0.411	10.44	0.049	1.25	2.375	60.33	1.154	29.30	0.985	25.02	12.44	55.35	10.19	1.78	**C0411-049-2375-S**	1.257	31.93	9.90	44.05	8.86	1.55
C0411-049-2500-M	0.411	10.44	0.049	1.25	2.500	63.50	1.212	30.78	1.033	26.25	12.44	55.35	9.66	1.69	**C0411-049-2500-S**	1.321	33.55	9.90	44.05	8.40	1.47
C0411-049-2625-M	0.411	10.44	0.049	1.25	2.625	66.68	1.270	32.25	1.082	27.48	12.44	55.35	9.18	1.61	**C0411-049-2625-S**	1.385	35.17	9.90	44.05	7.98	1.40
C0411-049-2750-M	0.411	10.44	0.049	1.25	2.750	69.85	1.328	33.72	1.130	28.71	12.44	55.35	8.75	1.53	**C0411-049-2750-S**	1.448	36.78	9.90	44.05	7.61	1.33
C0411-049-2875-M	0.411	10.44	0.049	1.25	2.875	73.03	1.386	35.19	1.179	29.94	12.44	55.35	8.35	1.46	**C0411-049-2875-S**	1.512	38.40	9.90	44.05	7.26	1.27
C0411-049-3000-M	0.411	10.44	0.049	1.25	3.000	76.20	1.443	36.66	1.227	31.17	12.44	55.35	7.99	1.40	**C0411-049-3000-S**	1.575	40.02	9.90	44.05	6.95	1.22
C0411-049-3250-M	0.411	10.44	0.049	1.25	3.250	82.55	1.559	39.61	1.324	33.63	12.44	55.35	7.36	1.29	**C0411-049-3250-S**	1.703	43.25	9.90	44.05	6.40	1.12
C0411-049-3500-M	0.411	10.44	0.049	1.25	3.500	88.90	1.675	42.55	1.421	36.09	12.44	55.35	6.82	1.19	**C0411-049-3500-S**	1.830	46.48	9.90	44.05	5.93	1.04
C0411-049-3750-M	0.411	10.44	0.049	1.25	3.750	95.25	1.791	45.50	1.518	38.55	12.44	55.35	6.35	1.11	**C0411-049-3750-S**	1.957	49.72	9.90	44.05	5.52	0.97
C0411-049-4000-M	0.411	10.44	0.049	1.25	4.000	101.60	1.907	48.44	1.615	41.01	12.44	55.35	5.95	1.04	**C0411-049-4000-S**	2.085	52.95	9.90	44.05	5.17	0.90
C0411-049-4250-M	0.411	10.44	0.049	1.25	4.250	107.95	2.023	51.38	1.711	43.47	12.44	55.35	5.59	0.98	**C0411-049-4250-S**	2.212	56.18	9.90	44.05	4.86	0.85
C0411-049-4500-M	0.411	10.44	0.049	1.25	4.500	114.30	2.139	54.33	1.808	45.93	12.44	55.35	5.27	0.92	**C0411-049-4500-S**	2.339	59.41	9.90	44.05	4.58	0.80
C0411-049-4750-M	0.411	10.44	0.049	1.25	4.750	120.65	2.255	57.27	1.905	48.39	12.44	55.35	4.99	0.87	**C0411-049-4750-S**	2.466	62.65	9.90	44.05	4.34	0.76
C0411-049-5000-M	0.411	10.44	0.049	1.25	5.000	127.00	2.371	60.22	2.002	50.85	12.44	55.35	4.73	0.83	**C0411-049-5000-S**	2.594	65.88	9.90	44.05	4.12	0.72
C0411-049-5250-M	0.411	10.44	0.049	1.25	5.250	133.35	2.487	63.16	2.099	53.31	12.44	55.35	4.50	0.79	**C0411-049-5250-S**	2.721	69.11	9.90	44.05	3.92	0.69
C0411-049-5500-M	0.411	10.44	0.049	1.25	5.500	139.70	2.603	66.10	2.196	55.77	12.44	55.35	4.29	0.75	**C0411-049-5500-S**	2.848	72.35	9.90	44.05	3.73	0.65
C0411-049-5750-M	0.411	10.44	0.049	1.25	5.750	146.05	2.718	69.05	2.293	58.23	12.44	55.35	4.11	0.72	**C0411-049-5750-S**	2.976	75.58	9.90	44.05	3.57	0.62
C0411-049-6000-M	0.411	10.44	0.049	1.25	6.000	152.40	2.834	71.99	2.389	60.69	12.44	55.35	3.93	0.69	**C0411-049-6000-S**	3.103	78.81	9.90	44.05	3.42	0.60
C0411-049-6250-M	0.411	10.44	0.049	1.25	6.250	158.75	2.950	74.94	2.486	63.15	12.44	55.35	3.77	0.66	**C0411-049-6250-S**	3.230	82.05	9.90	44.05	3.28	0.57
C0411-049-6500-M	0.411	10.44	0.049	1.25	6.500	165.10	3.066	77.88	2.583	65.61	12.44	55.35	3.62	0.63	**C0411-049-6500-S**	3.357	85.28	9.90	44.05	3.15	0.55
C0411-049-6750-M	0.411	10.44	0.049	1.25	6.750	171.45	3.182	80.82	2.680	68.07	12.44	55.35	3.49	0.61	**C0411-049-6750-S**	3.485	88.51	9.90	44.05	3.03	0.53
C0411-049-7000-M	0.411	10.44	0.049	1.25	7.000	177.80	3.298	83.77	2.777	70.53	12.44	55.35	3.36	0.59	**C0411-049-7000-S**	3.612	91.74	9.90	44.05	2.92	0.51
C0411-051-0625-M	0.411	10.44	0.051	1.30	0.625	15.88	0.356	9.03	0.323	8.22	13.90	61.81	51.58	9.03	**C0411-051-0625-S**	0.379	9.61	11.06	49.18	44.85	7.85
C0411-051-0688-M	0.411	10.44	0.051	1.30	0.688	17.46	0.386	9.80	0.349	8.87	13.90	61.81	46.08	8.06	**C0411-051-0688-S**	0.412	10.45	11.06	49.18	40.07	7.01
C0411-051-0750-M	0.411	10.44	0.051	1.30	0.750	19.05	0.416	10.57	0.375	9.53	13.90	61.81	41.63	7.29	**C0411-051-0750-S**	0.445	11.29	11.06	49.18	36.20	6.34
C0411-051-0813-M	0.411	10.44	0.051	1.30	0.813	20.64	0.447	11.34	0.401	10.19	13.90	61.81	37.97	6.64	**C0411-051-0813-S**	0.478	12.13	11.06	49.18	33.02	5.78
C0411-051-0875-M	0.411	10.44	0.051	1.30	0.875	22.23	0.477	12.11	0.427	10.84	13.90	61.81	34.90	6.11	**C0411-051-0875-S**	0.511	12.97	11.06	49.18	30.35	5.31
C0411-051-0938-M	0.411	10.44	0.051	1.30	0.938	23.81	0.507	12.88	0.453	11.50	13.90	61.81	32.29	5.65	**C0411-051-0938-S**	0.544	13.81	11.06	49.18	28.08	4.91
C0411-051-1000-M	0.411	10.44	0.051	1.30	1.000	25.40	0.537	13.65	0.479	12.16	13.90	61.81	30.04	5.26	**C0411-051-1000-S**	0.577	14.65	11.06	49.18	26.12	4.57
C0411-051-1125-M	0.411	10.44	0.051	1.30	1.125	28.58	0.598	15.19	0.530	13.47	13.90	61.81	26.37	4.61	**C0411-051-1125-S**	0.643	16.33	11.06	49.18	22.93	4.01
C0411-051-1250-M	0.411	10.44	0.051	1.30	1.250	31.75	0.659	16.73	0.582	14.78	13.90	61.81	23.50	4.11	**C0411-051-1250-S**	0.709	18.01	11.06	49.18	20.44	3.58
C0411-051-1375-M	0.411	10.44	0.051	1.30	1.375	34.93	0.719	18.27	0.634	16.10	13.90	61.81	21.19	3.71	**C0411-051-1375-S**	0.775	19.69	11.06	49.18	18.43	3.22
C0411-051-1500-M	0.411	10.44	0.051	1.30	1.500	38.10	0.780	19.81	0.686	17.41	13.90	61.81	19.30	3.38	**C0411-051-1500-S**	0.841	21.36	11.06	49.18	16.78	2.94
C0411-051-1625-M	0.411	10.44	0.051	1.30	1.625	41.28	0.841	21.35	0.737	18.73	13.90	61.81	17.71	3.10	**C0411-051-1625-S**	0.907	23.04	11.06	49.18	15.40	2.70
C0411-051-1750-M	0.411	10.44	0.051	1.30	1.750	44.45	0.901	22.89	0.789	20.04	13.90	61.81	16.37	2.86	**C0411-051-1750-S**	0.973	24.72	11.06	49.18	14.24	2.49
C0411-051-1875-M	0.411	10.44	0.051	1.30	1.875	47.63	0.962	24.43	0.841	21.35	13.90	61.81	15.22	2.66	**C0411-051-1875-S**	1.039	26.40	11.06	49.18	13.23	2.32
C0411-051-2000-M	0.411	10.44	0.051	1.30	2.000	50.80	1.022	25.97	0.892	22.67	13.90	61.81	14.21	2.49	**C0411-051-2000-S**	1.105	28.08	11.06	49.18	12.36	2.16
C0411-051-2125-M	0.411	10.44	0.051	1.30	2.125	53.98	1.083	27.51	0.944	23.98	13.90	61.81	13.34	2.33	**C0411-051-2125-S**	1.172	29.76	11.06	49.18	11.60	2.03
C0411-051-2250-M	0.411	10.44	0.051	1.30	2.250	57.15	1.144	29.05	0.996	25.29	13.90	61.81	12.56	2.20	**C0411-051-2250-S**	1.238	31.44	11.06	49.18	10.92	1.91
C0411-051-2375-M	0.411	10.44	0.051	1.30	2.375	60.33	1.204	30.59	1.048	26.61	13.90	61.81	11.87	2.08	**C0411-051-2375-S**	1.304	33.11	11.06	49.18	10.32	1.81
C0411-051-2500-M	0.411	10.44	0.051	1.30	2.500	63.50	1.265	32.13	1.099	27.92	13.90	61.81	11.25	1.97	**C0411-051-2500-S**	1.370	34.79	11.06	49.18	9.78	1.71
C0411-051-2625-M	0.411	10.44	0.051	1.30	2.625	66.68	1.326	33.67	1.151	29.24	13.90	61.81	10.69	1.87	**C0411-051-2625-S**	1.436	36.47	11.06	49.18	9.30	1.63
C0411-051-2750-M	0.411	10.44	0.051	1.30	2.750	69.85	1.386	35.21	1.203	30.55	13.90	61.81	10.19	1.78	**C0411-051-2750-S**	1.502	38.15	11.06	49.18	8.86	1.55
C0411-051-2875-M	0.411	10.44	0.051	1.30	2.875	73.03	1.447	36.75	1.254	31.86	13.90	61.81	9.73	1.70	**C0411-051-2875-S**	1.568	39.83	11.06	49.18	8.46	1.48
C0411-051-3000-M	0.411	10.44	0.051	1.30	3.000	76.20	1.507	38.29	1.306	33.18	13.90	61.81	9.31	1.63	**C0411-051-3000-S**	1.634	41.51	11.06	49.18	8.10	1.42
C0411-051-3250-M	0.411	10.44	0.051	1.30	3.250	82.55	1.629	41.37	1.410	35.80	13.90	61.81	8.57	1.50	**C0411-051-3250-S**	1.766	44.87	11.06	49.18	7.45	1.30
C0411-051-3500-M	0.411	10.44	0.051	1.30	3.500	88.90	1.750	44.45	1.513	38.43	13.90	61.81	7.94	1.39	**C0411-051-3500-S**	1.899	48.22	11.06	49.18	6.90	1.21
C0411-051-3750-M	0.411	10.44	0.051	1.30	3.750	95.25	1.871	47.52	1.616	41.06	13.90	61.81	7.40	1.29	**C0411-051-3750-S**	2.031	51.58	11.06	49.18	6.43	1.13
C0411-051-4000-M	0.411	10.44	0.051	1.30	4.000	101.60	1.992	50.60	1.720	43.69	13.90	61.81	6.92	1.21	**C0411-051-4000-S**	2.163	54.94	11.06	49.18	6.02	1.05
C0411-051-4250-M	0.411	10.44	0.051	1.30	4.250	107.95	2.114	53.68	1.823	46.31	13.90	61.81	6.50	1.14	**C0411-051-4250-S**	2.295	58.29	11.06	49.18	5.66	0.99
C0411-051-4500-M	0.411	10.44	0.051	1.30	4.500	114.30	2.235	56.76	1.927	48.94	13.90	61.81	6.13	1.07	**C0411-051-4500-S**	2.427	61.65	11.06	49.18	5.33	0.93
C0411-051-4750-M	0.411	10.44	0.051	1.30	4.750	120.65	2.356	59.84	2.030	51.57	13.90	61.81	5.80	1.02	**C0411-051-4750-S**	2.559	65.01	11.06	49.18	5.05	0.88
C0411-051-5000-M	0.411	10.44	0.051	1.30	5.000	127.00	2.477	62.92	2.134	54.19	13.90	61.81	5.51	0.96	**C0411-051-5000-S**	2.692	68.37	11.06	49.18	4.79	0.84
C0411-051-5250-M	0.411	10.44	0.051	1.30	5.250	133.35	2.598	66.00	2.237	56.82	13.90	61.81	5.24	0.92	**C0411-051-5250-S**	2.824	71.72	11.06	49.18	4.56	0.80

Part Numbers with an "*" are squared and not ground. **Part Numbers in bold** represent the newly expanded Associated Spring RAYMOND compression spring offering.

MUSIC WIRE															STAINLESS STEEL					
Catalog #	Outside Diameter (OD)		Wire Diameter (d)		Free Length (L) Approx		Load Length (L_1)		Solid Height (Sh) Approx		Load (P) at L_1		Spring Rate (R)		Catalog #	Load Length (L_1)		Load (P) at L_1		Spring Rate (R)	
	in	mm	in	mm	in	mm	in	mm	in	mm	lb	N	lb/in	N/mm		in	mm	lb	N	lb/in	N/mm
C0411-051-5500-M	0.411	10.44	0.051	1.30	5.500	139.70	2.720	69.08	2.341	59.45	13.90	61.81	5.00	0.87	**C0411-051-5500-S**	2.956	75.08	11.06	49.18	4.35	0.76
C0411-051-5750-M	0.411	10.44	0.051	1.30	5.750	146.05	2.841	72.16	2.444	62.08	13.90	61.81	4.78	0.84	**C0411-051-5750-S**	3.088	78.44	11.06	49.18	4.15	0.73
C0411-051-6000-M	0.411	10.44	0.051	1.30	6.000	152.40	2.962	75.24	2.547	64.70	13.90	61.81	4.57	0.80	**C0411-051-6000-S**	3.220	81.79	11.06	49.18	3.98	0.70
C0411-051-6250-M	0.411	10.44	0.051	1.30	6.250	158.75	3.083	78.32	2.651	67.33	13.90	61.81	4.39	0.77	**C0411-051-6250-S**	3.352	85.15	11.06	49.18	3.82	0.67
C0411-051-6500-M	0.411	10.44	0.051	1.30	6.500	165.10	3.205	81.40	2.754	69.96	13.90	61.81	4.22	0.74	**C0411-051-6500-S**	3.485	88.51	11.06	49.18	3.67	0.64
C0411-051-6750-M	0.411	10.44	0.051	1.30	6.750	171.45	3.326	84.48	2.858	72.59	13.90	61.81	4.06	0.71	**C0411-051-6750-S**	3.617	91.87	11.06	49.18	3.53	0.62
C0411-051-7000-M	0.411	10.44	0.051	1.30	7.000	177.80	3.447	87.56	2.961	75.21	13.90	61.81	3.91	0.68	**C0411-051-7000-S**	3.749	95.22	11.06	49.18	3.40	0.60
C0411-055-0625-M	0.411	10.44	0.055	1.40	0.625	15.88	0.381	9.69	0.355	9.03	17.10	76.08	70.21	12.29	**C0411-055-0625-S**	0.402	10.22	13.60	60.50	61.05	10.68
C0411-055-0688-M	0.411	10.44	0.055	1.40	0.688	17.46	0.414	10.52	0.384	9.76	17.10	76.08	62.61	10.96	**C0411-055-0688-S**	0.438	11.12	13.60	60.50	54.44	9.53
C0411-055-0750-M	0.411	10.44	0.055	1.40	0.750	19.05	0.447	11.36	0.414	10.50	17.10	76.08	56.49	9.89	**C0411-055-0750-S**	0.473	12.02	13.60	60.50	49.13	8.60
C0411-055-0813-M	0.411	10.44	0.055	1.40	0.813	20.64	0.480	12.20	0.443	11.24	17.10	76.08	51.47	9.01	**C0411-055-0813-S**	0.509	12.92	13.60	60.50	44.76	7.83
C0411-055-0875-M	0.411	10.44	0.055	1.40	0.875	22.23	0.513	13.03	0.472	11.98	17.10	76.08	47.26	8.27	**C0411-055-0875-S**	0.544	13.82	13.60	60.50	41.10	7.19
C0411-055-0938-M	0.411	10.44	0.055	1.40	0.938	23.81	0.546	13.87	0.501	12.72	17.10	76.08	43.69	7.65	**C0411-055-0938-S**	0.580	14.72	13.60	60.50	37.99	6.65
C0411-055-1000-M	0.411	10.44	0.055	1.40	1.000	25.40	0.579	14.71	0.530	13.46	17.10	76.08	40.63	7.11	**C0411-055-1000-S**	0.615	15.62	13.60	60.50	35.33	6.18
C0411-055-1125-M	0.411	10.44	0.055	1.40	1.125	28.58	0.645	16.38	0.588	14.94	17.10	76.08	35.62	6.23	**C0411-055-1125-S**	0.686	17.42	13.60	60.50	30.98	5.42
C0411-055-1250-M	0.411	10.44	0.055	1.40	1.250	31.75	0.711	18.05	0.646	16.42	17.10	76.08	31.72	5.55	**C0411-055-1250-S**	0.757	19.22	13.60	60.50	27.58	4.83
C0411-055-1375-M	0.411	10.44	0.055	1.40	1.375	34.93	0.777	19.73	0.705	17.90	17.10	76.08	28.58	5.00	**C0411-055-1375-S**	0.828	21.03	13.60	60.50	24.85	4.35
C0411-055-1500-M	0.411	10.44	0.055	1.40	1.500	38.10	0.842	21.40	0.763	19.37	17.10	76.08	26.01	4.55	**C0411-055-1500-S**	0.899	22.83	13.60	60.50	22.62	3.96
C0411-055-1625-M	0.411	10.44	0.055	1.40	1.625	41.28	0.908	23.07	0.821	20.85	17.10	76.08	23.87	4.18	**C0411-055-1625-S**	0.970	24.63	13.60	60.50	20.75	3.63
C0411-055-1750-M	0.411	10.44	0.055	1.40	1.750	44.45	0.974	24.75	0.879	22.33	17.10	76.08	22.05	3.86	**C0411-055-1750-S**	1.041	26.43	13.60	60.50	19.17	3.35
C0411-055-1875-M	0.411	10.44	0.055	1.40	1.875	47.63	1.040	26.42	0.937	23.81	17.10	76.08	20.49	3.58	**C0411-055-1875-S**	1.112	28.23	13.60	60.50	17.81	3.12
C0411-055-2000-M	0.411	10.44	0.055	1.40	2.000	50.80	1.106	28.09	0.996	25.29	17.10	76.08	19.13	3.35	**C0411-055-2000-S**	1.182	30.03	13.60	60.50	16.64	2.91
C0411-055-2125-M	0.411	10.44	0.055	1.40	2.125	53.98	1.172	29.76	1.054	26.77	17.10	76.08	17.94	3.14	**C0411-055-2125-S**	1.253	31.84	13.60	60.50	15.60	2.73
C0411-055-2250-M	0.411	10.44	0.055	1.40	2.250	57.15	1.238	31.44	1.112	28.25	17.10	76.08	16.90	2.96	**C0411-055-2250-S**	1.324	33.64	13.60	60.50	14.69	2.57
C0411-055-2375-M	0.411	10.44	0.055	1.40	2.375	60.33	1.304	33.11	1.170	29.72	17.10	76.08	15.96	2.79	**C0411-055-2375-S**	1.395	35.44	13.60	60.50	13.88	2.43
C0411-055-2500-M	0.411	10.44	0.055	1.40	2.500	63.50	1.369	34.78	1.228	31.20	17.10	76.08	15.13	2.65	**C0411-055-2500-S**	1.466	37.24	13.60	60.50	13.16	2.30
C0411-055-2625-M	0.411	10.44	0.055	1.40	2.625	66.68	1.435	36.46	1.287	32.68	17.10	76.08	14.38	2.52	**C0411-055-2625-S**	1.537	39.04	13.60	60.50	12.50	2.19
C0411-055-2750-M	0.411	10.44	0.055	1.40	2.750	69.85	1.501	38.13	1.345	34.16	17.10	76.08	13.70	2.40	**C0411-055-2750-S**	1.608	40.84	13.60	60.50	11.91	2.08
C0411-055-2875-M	0.411	10.44	0.055	1.40	2.875	73.03	1.567	39.80	1.403	35.64	17.10	76.08	13.08	2.29	**C0411-055-2875-S**	1.679	42.65	13.60	60.50	11.37	1.99
C0411-055-3000-M	0.411	10.44	0.055	1.40	3.000	76.20	1.633	41.48	1.461	37.12	17.10	76.08	12.51	2.19	**C0411-055-3000-S**	1.750	44.45	13.60	60.50	10.88	1.90
C0411-055-3250-M	0.411	10.44	0.055	1.40	3.250	82.55	1.765	44.82	1.578	40.07	17.10	76.08	11.52	2.02	**C0411-055-3250-S**	1.892	48.05	13.60	60.50	10.01	1.75
C0411-055-3500-M	0.411	10.44	0.055	1.40	3.500	88.90	1.896	48.17	1.694	43.03	17.10	76.08	10.67	1.87	**C0411-055-3500-S**	2.034	51.65	13.60	60.50	9.27	1.62
C0411-055-3750-M	0.411	10.44	0.055	1.40	3.750	95.25	2.028	51.52	1.811	45.99	17.10	76.08	9.93	1.74	**C0411-055-3750-S**	2.175	55.26	13.60	60.50	8.64	1.51
C0411-055-4000-M	0.411	10.44	0.055	1.40	4.000	101.60	2.160	54.86	1.927	48.94	17.10	76.08	9.30	1.63	**C0411-055-4000-S**	2.317	58.86	13.60	60.50	8.08	1.41
C0411-055-4250-M	0.411	10.44	0.055	1.40	4.250	107.95	2.292	58.21	2.043	51.90	17.10	76.08	8.73	1.53	**C0411-055-4250-S**	2.459	62.46	13.60	60.50	7.59	1.33
C0411-055-4500-M	0.411	10.44	0.055	1.40	4.500	114.30	2.423	61.55	2.160	54.86	17.10	76.08	8.24	1.44	**C0411-055-4500-S**	2.601	66.07	13.60	60.50	7.16	1.25
C0411-055-4750-M	0.411	10.44	0.055	1.40	4.750	120.65	2.555	64.90	2.276	57.82	17.10	76.08	7.79	1.36	**C0411-055-4750-S**	2.743	69.67	13.60	60.50	6.78	1.19
C0411-055-5000-M	0.411	10.44	0.055	1.40	5.000	127.00	2.687	68.25	2.393	60.77	17.10	76.08	7.39	1.29	**C0411-055-5000-S**	2.885	73.27	13.60	60.50	6.43	1.13
C0411-055-5250-M	0.411	10.44	0.055	1.40	5.250	133.35	2.819	71.59	2.509	63.73	17.10	76.08	7.03	1.23	**C0411-055-5250-S**	3.027	76.88	13.60	60.50	6.12	1.07
C0411-055-5500-M	0.411	10.44	0.055	1.40	5.500	139.70	2.950	74.94	2.625	66.69	17.10	76.08	6.71	1.17	**C0411-055-5500-S**	3.168	80.48	13.60	60.50	5.83	1.02
C0411-055-5750-M	0.411	10.44	0.055	1.40	5.750	146.05	3.082	78.29	2.742	69.64	17.10	76.08	6.41	1.12	**C0411-055-5750-S**	3.310	84.08	13.60	60.50	5.58	0.98
C0411-055-6000-M	0.411	10.44	0.055	1.40	6.000	152.40	3.214	81.63	2.858	72.60	17.10	76.08	6.14	1.07	**C0411-055-6000-S**	3.452	87.69	13.60	60.50	5.34	0.93
C0411-055-6250-M	0.411	10.44	0.055	1.40	6.250	158.75	3.346	84.98	2.975	75.56	17.10	76.08	5.89	1.03	**C0411-055-6250-S**	3.594	91.29	13.60	60.50	5.12	0.90
C0411-055-6500-M	0.411	10.44	0.055	1.40	6.500	165.10	3.477	88.32	3.091	78.51	17.10	76.08	5.66	0.99	**C0411-055-6500-S**	3.736	94.89	13.60	60.50	4.92	0.86
C0411-055-6750-M	0.411	10.44	0.055	1.40	6.750	171.45	3.609	91.67	3.208	81.47	17.10	76.08	5.45	0.95	**C0411-055-6750-S**	3.878	98.50	13.60	60.50	4.74	0.83
C0411-055-7000-M	0.411	10.44	0.055	1.40	7.000	177.80	3.741	95.02	3.324	84.43	17.10	76.08	5.25	0.92	**C0411-055-7000-S**	4.020	102.10	13.60	60.50	4.56	0.80
C0411-059-0625-M	0.411	10.44	0.059	1.50	0.625	15.88	0.406	10.31	0.385	9.79	20.73	92.21	94.58	16.55	**C0411-059-0625-S**	0.425	10.79	16.47	73.25	82.24	14.39
C0411-059-0688-M	0.411	10.44	0.059	1.50	0.688	17.46	0.441	11.21	0.418	10.61	20.73	92.21	84.20	14.73	**C0411-059-0688-S**	0.463	11.75	16.47	73.25	73.22	12.81
C0411-059-0750-M	0.411	10.44	0.059	1.50	0.750	19.05	0.477	12.11	0.450	11.43	20.73	92.21	75.87	13.28	**C0411-059-0750-S**	0.500	12.71	16.47	73.25	65.98	11.55
C0411-059-0813-M	0.411	10.44	0.059	1.50	0.813	20.64	0.512	13.01	0.482	12.25	20.73	92.21	69.05	12.08	**C0411-059-0813-S**	0.538	13.67	16.47	73.25	60.04	10.51
C0411-059-0875-M	0.411	10.44	0.059	1.50	0.875	22.23	0.548	13.91	0.514	13.07	20.73	92.21	63.34	11.09	**C0411-059-0875-S**	0.576	14.63	16.47	73.25	55.08	9.64
C0411-059-0938-M	0.411	10.44	0.059	1.50	0.938	23.81	0.583	14.81	0.547	13.89	20.73	92.21	58.51	10.24	**C0411-059-0938-S**	0.614	15.59	16.47	73.25	50.88	8.90
C0411-059-1000-M	0.411	10.44	0.059	1.50	1.000	25.40	0.619	15.72	0.579	14.71	20.73	92.21	54.37	9.51	**C0411-059-1000-S**	0.652	16.55	16.47	73.25	47.28	8.27
C0411-059-1125-M	0.411	10.44	0.059	1.50	1.125	28.58	0.690	17.52	0.643	16.34	20.73	92.21	47.62	8.33	**C0411-059-1125-S**	0.727	18.47	16.47	73.25	41.41	7.25
C0411-059-1250-M	0.411	10.44	0.059	1.50	1.250	31.75	0.761	19.32	0.708	17.98	20.73	92.21	42.36	7.41	**C0411-059-1250-S**	0.803	20.39	16.47	73.25	36.84	6.45
C0411-059-1375-M	0.411	10.44	0.059	1.50	1.375	34.93	0.832	21.12	0.772	19.62	20.73	92.21	38.15	6.68	**C0411-059-1375-S**	0.879	22.32	16.47	73.25	33.17	5.81
C0411-059-1500-M	0.411	10.44	0.059	1.50	1.500	38.10	0.903	22.92	0.837	21.26	20.73	92.21	34.70	6.07	**C0411-059-1500-S**	0.954	24.24	16.47	73.25	30.17	5.28
C0411-059-1625-M	0.411	10.44	0.059	1.50	1.625	41.28	0.974	24.73	0.901	22.90	20.73	92.21	31.82	5.57	**C0411-059-1625-S**	1.030	26.16	16.47	73.25	27.67	4.84
C0411-059-1750-M	0.411	10.44	0.059	1.50	1.750	44.45	1.044	26.53	0.966	24.54	20.73	92.21	29.38	5.14	**C0411-059-1750-S**	1.105	28.08	16.47	73.25	25.55	4.47
C0411-059-1875-M	0.411	10.44	0.059	1.50	1.875	47.63	1.115	28.33	1.030	26.17	20.73	92.21	27.29	4.78	**C0411-059-1875-S**	1.181	30.00	16.47	73.25	23.73	4.15
C0411-059-2000-M	0.411	10.44	0.059	1.50	2.000	50.80	1.186	30.13	1.095	27.81	20.73	92.21	25.48	4.46	**C0411-059-2000-S**	1.257	31.92	16.47	73.25	22.16	3.88
C0411-059-2125-M	0.411	10.44	0.059	1.50	2.125	53.98	1.257	31.94	1.159	29.45	20.73	92.21	23.89	4.18	**C0411-059-2125-S**	1.332	33.84	16.47	73.25	20.78	3.64
C0411-059-2250-M	0.411	10.44	0.059	1.50	2.250	57.15	1.328	33.74	1.224	31.09	20.73	92.21	22.49	3.94	**C0411-059-2250-S**	1.408	35.76	16.47	73.25	19.56	3.42
C0411-059-2375-M	0.411	10.44	0.059	1.50	2.375	60.33	1.399	35.54	1.288	32.73	20.73	92.21	21.25	3.72	**C0411-059-2375-S**	1.484	37.68	16.47	73.25	18.48	3.23

FOR INFORMATION ON ALTERNATIVE FINISHES, SEE PAGE 311

Part Numbers with an "*" are squared and not ground. **Part Numbers in bold** represent the newly expanded Associated Spring RAYMOND compression spring offering.

(OD) 0.411 - 0.411

MUSIC WIRE															STAINLESS STEEL						
Catalog #	Outside Diameter (OD)		Wire Diameter (d)		Free Length (L) Approx		Load Length (L_1)		Solid Height (Sh) Approx		Load (P) at L_1		Spring Rate (R)		Catalog #	Load Length (L_1)		Load (P) at L_1		Spring Rate (R)	
	in	mm	in	mm	in	mm	in	mm	in	mm	lb	N	lb/in	N/mm		in	mm	lb	N	lb/in	N/mm
C0411-059-2500-M	0.411	10.44	0.059	1.50	2.500	63.50	1.470	37.34	1.353	34.36	20.73	92.21	20.13	3.52	**C0411-059-2500-S**	1.559	39.61	16.47	73.25	17.51	3.06
C0411-059-2625-M	0.411	10.44	0.059	1.50	2.625	66.68	1.541	39.15	1.417	36.00	20.73	92.21	19.13	3.35	**C0411-059-2625-S**	1.635	41.53	16.47	73.25	16.63	2.91
C0411-059-2750-M	0.411	10.44	0.059	1.50	2.750	69.85	1.612	40.95	1.482	37.64	20.73	92.21	18.22	3.19	**C0411-059-2750-S**	1.711	43.45	16.47	73.25	15.84	2.77
C0411-059-2875-M	0.411	10.44	0.059	1.50	2.875	73.03	1.683	42.75	1.546	39.28	20.73	92.21	17.39	3.04	**C0411-059-2875-S**	1.786	45.37	16.47	73.25	15.12	2.65
C0411-059-3000-M	0.411	10.44	0.059	1.50	3.000	76.20	1.754	44.55	1.611	40.92	20.73	92.21	16.64	2.91	**C0411-059-3000-S**	1.862	47.29	16.47	73.25	14.47	2.53
C0411-059-3250-M	0.411	10.44	0.059	1.50	3.250	82.55	1.896	48.16	1.740	44.19	20.73	92.21	15.31	2.68	**C0411-059-3250-S**	2.013	51.13	16.47	73.25	13.31	2.33
C0411-059-3500-M	0.411	10.44	0.059	1.50	3.500	88.90	2.038	51.76	1.869	47.47	20.73	92.21	14.18	2.48	**C0411-059-3500-S**	2.164	54.97	16.47	73.25	12.33	2.16
C0411-059-3750-M	0.411	10.44	0.059	1.50	3.750	95.25	2.180	55.37	1.998	50.75	20.73	92.21	13.20	2.31	**C0411-059-3750-S**	2.316	58.82	16.47	73.25	11.48	2.01
C0411-059-4000-M	0.411	10.44	0.059	1.50	4.000	101.60	2.322	58.97	2.127	54.02	20.73	92.21	12.35	2.16	**C0411-059-4000-S**	2.467	62.66	16.47	73.25	10.74	1.88
C0411-059-4250-M	0.411	10.44	0.059	1.50	4.250	107.95	2.464	62.58	2.256	57.30	20.73	92.21	11.61	2.03	**C0411-059-4250-S**	2.618	66.50	16.47	73.25	10.09	1.77
C0411-059-4500-M	0.411	10.44	0.059	1.50	4.500	114.30	2.606	66.18	2.385	60.58	20.73	92.21	10.94	1.92	**C0411-059-4500-S**	2.769	70.34	16.47	73.25	9.52	1.67
C0411-059-4750-M	0.411	10.44	0.059	1.50	4.750	120.65	2.748	69.79	2.514	63.85	20.73	92.21	10.35	1.81	**C0411-059-4750-S**	2.921	74.18	16.47	73.25	9.00	1.58
C0411-059-5000-M	0.411	10.44	0.059	1.50	5.000	127.00	2.889	73.39	2.643	67.13	20.73	92.21	9.82	1.72	**C0411-059-5000-S**	3.072	78.03	16.47	73.25	8.54	1.49
C0411-059-5250-M	0.411	10.44	0.059	1.50	5.250	133.35	3.031	77.00	2.772	70.41	20.73	92.21	9.34	1.64	**C0411-059-5250-S**	3.223	81.87	16.47	73.25	8.13	1.42
C0411-059-5500-M	0.411	10.44	0.059	1.50	5.500	139.70	3.173	80.60	2.901	73.68	20.73	92.21	8.91	1.56	**C0411-059-5500-S**	3.374	85.71	16.47	73.25	7.75	1.36
C0411-059-5750-M	0.411	10.44	0.059	1.50	5.750	146.05	3.315	84.21	3.030	76.96	20.73	92.21	8.51	1.49	**C0411-059-5750-S**	3.526	89.55	16.47	73.25	7.40	1.30
C0411-059-6000-M	0.411	10.44	0.059	1.50	6.000	152.40	3.457	87.81	3.159	80.23	20.73	92.21	8.15	1.43	**C0411-059-6000-S**	3.677	93.40	16.47	73.25	7.09	1.24
C0411-059-6250-M	0.411	10.44	0.059	1.50	6.250	158.75	3.599	91.42	3.288	83.51	20.73	92.21	7.82	1.37	**C0411-059-6250-S**	3.828	97.24	16.47	73.25	6.80	1.19
C0411-059-6500-M	0.411	10.44	0.059	1.50	6.500	165.10	3.741	95.02	3.417	86.79	20.73	92.21	7.51	1.31	**C0411-059-6500-S**	3.980	101.08	16.47	73.25	6.53	1.14
C0411-059-6750-M	0.411	10.44	0.059	1.50	6.750	171.45	3.883	98.63	3.546	90.06	20.73	92.21	7.23	1.27	**C0411-059-6750-S**	4.131	104.92	16.47	73.25	6.29	1.10
C0411-059-7000-M	0.411	10.44	0.059	1.50	7.000	177.80	4.025	102.23	3.675	93.34	20.73	92.21	6.97	1.22	**C0411-059-7000-S**	4.282	108.76	16.47	73.25	6.06	1.06
C0411-063-0625-M	0.411	10.44	0.063	1.60	0.625	15.88	0.429	10.89	0.414	10.51	24.79	110.27	126.29	22.10	**C0411-063-0625-S**	0.446	11.33	19.67	87.49	109.81	19.22
C0411-063-0688-M	0.411	10.44	0.063	1.60	0.688	17.46	0.467	11.85	0.449	11.40	24.79	110.27	112.23	19.64	**C0411-063-0688-S**	0.486	12.34	19.67	87.49	97.59	17.08
C0411-063-0750-M	0.411	10.44	0.063	1.60	0.750	19.05	0.505	12.81	0.484	12.30	24.79	110.27	100.99	17.67	**C0411-063-0750-S**	0.526	13.36	19.67	87.49	87.82	15.37
C0411-063-0813-M	0.411	10.44	0.063	1.60	0.813	20.64	0.542	13.78	0.520	13.20	24.79	110.27	91.79	16.06	**C0411-063-0813-S**	0.566	14.38	19.67	87.49	79.82	13.97
C0411-063-0875-M	0.411	10.44	0.063	1.60	0.875	22.23	0.580	14.74	0.555	14.09	24.79	110.27	84.13	14.72	**C0411-063-0875-S**	0.606	15.40	19.67	87.49	73.16	12.80
C0411-063-0938-M	0.411	10.44	0.063	1.60	0.938	23.81	0.618	15.70	0.590	14.99	24.79	110.27	77.65	13.59	**C0411-063-0938-S**	0.646	16.41	19.67	87.49	67.53	11.82
C0411-063-1000-M	0.411	10.44	0.063	1.60	1.000	25.40	0.656	16.67	0.625	15.88	24.79	110.27	72.10	12.62	**C0411-063-1000-S**	0.686	17.43	19.67	87.49	62.70	10.97
C0411-063-1125-M	0.411	10.44	0.063	1.60	1.125	28.58	0.732	18.59	0.696	17.67	24.79	110.27	63.08	11.04	**C0411-063-1125-S**	0.766	19.47	19.67	87.49	54.85	9.60
C0411-063-1250-M	0.411	10.44	0.063	1.60	1.250	31.75	0.808	20.52	0.766	19.46	24.79	110.27	56.07	9.81	**C0411-063-1250-S**	0.847	21.50	19.67	87.49	48.75	8.53
C0411-063-1375-M	0.411	10.44	0.063	1.60	1.375	34.93	0.884	22.44	0.837	21.25	24.79	110.27	50.45	8.83	**C0411-063-1375-S**	0.927	23.54	19.67	87.49	43.87	7.68
C0411-063-1500-M	0.411	10.44	0.063	1.60	1.500	38.10	0.959	24.37	0.907	23.05	24.79	110.27	45.86	8.03	**C0411-063-1500-S**	1.007	25.57	19.67	87.49	39.88	6.98
C0411-063-1625-M	0.411	10.44	0.063	1.60	1.625	41.28	1.035	26.30	0.978	24.84	24.79	110.27	42.04	7.36	**C0411-063-1625-S**	1.087	27.61	19.67	87.49	36.56	6.40
C0411-063-1750-M	0.411	10.44	0.063	1.60	1.750	44.45	1.111	28.22	1.048	26.63	24.79	110.27	38.80	6.79	**C0411-063-1750-S**	1.167	29.64	19.67	87.49	33.74	5.90
C0411-063-1875-M	0.411	10.44	0.063	1.60	1.875	47.63	1.187	30.15	1.119	28.42	24.79	110.27	36.03	6.31	**C0411-063-1875-S**	1.247	31.68	19.67	87.49	31.33	5.48
C0411-063-2000-M	0.411	10.44	0.063	1.60	2.000	50.80	1.263	32.07	1.189	30.21	24.79	110.27	33.63	5.88	**C0411-063-2000-S**	1.327	33.72	19.67	87.49	29.24	5.12
C0411-063-2125-M	0.411	10.44	0.063	1.60	2.125	53.98	1.339	34.00	1.260	32.00	24.79	110.27	31.52	5.52	**C0411-063-2125-S**	1.408	35.75	19.67	87.49	27.41	4.80
C0411-063-2250-M	0.411	10.44	0.063	1.60	2.250	57.15	1.414	35.93	1.330	33.79	24.79	110.27	29.67	5.19	**C0411-063-2250-S**	1.488	37.79	19.67	87.49	25.80	4.51
C0411-063-2375-M	0.411	10.44	0.063	1.60	2.375	60.33	1.490	37.85	1.401	35.58	24.79	110.27	28.02	4.90	**C0411-063-2375-S**	1.568	39.82	19.67	87.49	24.37	4.26
C0411-063-2500-M	0.411	10.44	0.063	1.60	2.500	63.50	1.566	39.78	1.471	37.37	24.79	110.27	26.54	4.65	**C0411-063-2500-S**	1.648	41.86	19.67	87.49	23.08	4.04
C0411-063-2625-M	0.411	10.44	0.063	1.60	2.625	66.68	1.642	41.70	1.542	39.16	24.79	110.27	25.22	4.41	**C0411-063-2625-S**	1.728	43.89	19.67	87.49	21.93	3.84
C0411-063-2750-M	0.411	10.44	0.063	1.60	2.750	69.85	1.718	43.63	1.612	40.95	24.79	110.27	24.02	4.20	**C0411-063-2750-S**	1.808	45.93	19.67	87.49	20.88	3.65
C0411-063-2875-M	0.411	10.44	0.063	1.60	2.875	73.03	1.794	45.56	1.683	42.74	24.79	110.27	22.92	4.01	**C0411-063-2875-S**	1.888	47.96	19.67	87.49	19.93	3.49
C0411-063-3000-M	0.411	10.44	0.063	1.60	3.000	76.20	1.869	47.48	1.753	44.53	24.79	110.27	21.93	3.84	**C0411-063-3000-S**	1.968	50.00	19.67	87.49	19.07	3.34
C0411-063-3250-M	0.411	10.44	0.063	1.60	3.250	82.55	2.021	51.33	1.894	48.12	24.79	110.27	20.17	3.53	**C0411-063-3250-S**	2.129	54.07	19.67	87.49	17.54	3.07
C0411-063-3500-M	0.411	10.44	0.063	1.60	3.500	88.90	2.173	55.19	2.035	51.70	24.79	110.27	18.68	3.27	**C0411-063-3500-S**	2.289	58.14	19.67	87.49	16.24	2.84
C0411-063-3750-M	0.411	10.44	0.063	1.60	3.750	95.25	2.324	59.04	2.176	55.28	24.79	110.27	17.39	3.04	**C0411-063-3750-S**	2.449	62.21	19.67	87.49	15.12	2.65
C0411-063-4000-M	0.411	10.44	0.063	1.60	4.000	101.60	2.476	62.89	2.317	58.86	24.79	110.27	16.27	2.85	**C0411-063-4000-S**	2.610	66.28	19.67	87.49	14.15	2.48
C0411-063-4250-M	0.411	10.44	0.063	1.60	4.250	107.95	2.628	66.74	2.458	62.44	24.79	110.27	15.28	2.67	**C0411-063-4250-S**	2.770	70.35	19.67	87.49	13.29	2.33
C0411-063-4500-M	0.411	10.44	0.063	1.60	4.500	114.30	2.779	70.59	2.599	66.02	24.79	110.27	14.41	2.52	**C0411-063-4500-S**	2.930	74.42	19.67	87.49	12.53	2.19
C0411-063-4750-M	0.411	10.44	0.063	1.60	4.750	120.65	2.931	74.45	2.740	69.61	24.79	110.27	13.63	2.38	**C0411-063-4750-S**	3.090	78.49	19.67	87.49	11.85	2.07
C0411-063-5000-M	0.411	10.44	0.063	1.60	5.000	127.00	3.083	78.30	2.881	73.19	24.79	110.27	12.93	2.26	**C0411-063-5000-S**	3.251	82.57	19.67	87.49	11.24	1.97
C0411-063-5250-M	0.411	10.44	0.063	1.60	5.250	133.35	3.234	82.15	3.022	76.77	24.79	110.27	12.30	2.15	**C0411-063-5250-S**	3.411	86.64	19.67	87.49	10.69	1.87
C0411-063-5500-M	0.411	10.44	0.063	1.60	5.500	139.70	3.386	86.00	3.163	80.35	24.79	110.27	11.73	2.05	**C0411-063-5500-S**	3.571	90.71	19.67	87.49	10.20	1.78
C0411-063-5750-M	0.411	10.44	0.063	1.60	5.750	146.05	3.538	89.85	3.304	83.93	24.79	110.27	11.21	1.96	**C0411-063-5750-S**	3.731	94.78	19.67	87.49	9.74	1.71
C0411-063-6000-M	0.411	10.44	0.063	1.60	6.000	152.40	3.689	93.71	3.445	87.51	24.79	110.27	10.73	1.88	**C0411-063-6000-S**	3.892	98.85	19.67	87.49	9.33	1.63
C0411-063-6250-M	0.411	10.44	0.063	1.60	6.250	158.75	3.841	97.56	3.586	91.10	24.79	110.27	10.29	1.80	**C0411-063-6250-S**	4.052	102.92	19.67	87.49	8.95	1.57
C0411-063-6500-M	0.411	10.44	0.063	1.60	6.500	165.10	3.992	101.41	3.727	94.68	24.79	110.27	9.89	1.73	**C0411-063-6500-S**	4.212	106.99	19.67	87.49	8.60	1.50
C0411-063-6750-M	0.411	10.44	0.063	1.60	6.750	171.45	4.144	105.26	3.868	98.26	24.79	110.27	9.51	1.66	**C0411-063-6750-S**	4.372	111.06	19.67	87.49	8.27	1.45
C0411-068-0625-M	0.411	10.44	0.068	1.73	0.625	15.88	0.455	11.55	0.446	11.33	30.50	135.65	179.29	31.38	**C0411-068-0625-S**	0.470	11.94	24.15	107.41	155.90	27.28
C0411-068-0688-M	0.411	10.44	0.068	1.73	0.688	17.46	0.496	12.59	0.485	12.32	30.50	135.65	158.97	27.82	**C0411-068-0688-S**	0.513	13.03	24.15	107.41	138.23	24.19
C0411-068-0750-M	0.411	10.44	0.068	1.73	0.750	19.05	0.536	13.63	0.524	13.30	30.50	135.65	142.79	24.99	**C0411-068-0750-S**	0.556	14.11	24.15	107.41	124.16	21.73
C0411-068-0813-M	0.411	10.44	0.068	1.73	0.813	20.64	0.577	14.66	0.562	14.29	30.50	135.65	129.60	22.68	**C0411-068-0813-S**	0.598	15.19	24.15	107.41	112.69	19.72
C0411-068-0875-M	0.411	10.44	0.068	1.73	0.875	22.23	0.618	15.70	0.601	15.27	30.50	135.65	118.63	20.76	**C0411-068-0875-S**	0.641	16.28	24.15	107.41	103.16	18.05

Part Numbers with an "*" are squared and not ground. **Part Numbers in bold** represent the newly expanded Associated Spring RAYMOND compression spring offering.

MUSIC WIRE

Catalog #	Outside Diameter (OD)		Wire Diameter (d)		Free Length (L) Approx		Load Length (L_1)		Solid Height (Sh) Approx		Load (P) at L_1		Spring Rate (R)	
	in	mm	in	mm	in	mm	in	mm	in	mm	lb	N	lb/in	N/mm
C0411-068-0938-M	0.411	10.44	0.068	1.73	0.938	23.81	0.659	16.73	0.640	16.26	30.50	135.65	109.38	19.14
C0411-068-1000-M	0.411	10.44	0.068	1.73	1.000	25.40	0.699	17.77	0.679	17.24	30.50	135.65	101.47	17.76
C0411-068-1125-M	0.411	10.44	0.068	1.73	1.125	28.58	0.781	19.84	0.756	19.21	30.50	135.65	88.65	15.51
C0411-068-1250-M	0.411	10.44	0.068	1.73	1.250	31.75	0.862	21.91	0.834	21.18	30.50	135.65	78.70	13.77
C0411-068-1375-M	0.411	10.44	0.068	1.73	1.375	34.93	0.944	23.98	0.911	23.15	30.50	135.65	70.76	12.38
C0411-068-1500-M	0.411	10.44	0.068	1.73	1.500	38.10	1.026	26.05	0.989	25.12	30.50	135.65	64.28	11.25
C0411-068-1625-M	0.411	10.44	0.068	1.73	1.625	41.28	1.107	28.12	1.066	27.09	30.50	135.65	58.88	10.30
C0411-068-1750-M	0.411	10.44	0.068	1.73	1.750	44.45	1.189	30.19	1.144	29.06	30.50	135.65	54.32	9.51
C0411-068-1875-M	0.411	10.44	0.068	1.73	1.875	47.63	1.270	32.26	1.222	31.03	30.50	135.65	50.41	8.82
C0411-068-2000-M	0.411	10.44	0.068	1.73	2.000	50.80	1.352	34.33	1.299	33.00	30.50	135.65	47.03	8.23
C0411-068-2125-M	0.411	10.44	0.068	1.73	2.125	53.98	1.433	36.40	1.377	34.97	30.50	135.65	44.08	7.71
C0411-068-2250-M	0.411	10.44	0.068	1.73	2.250	57.15	1.515	38.47	1.454	36.93	30.50	135.65	41.47	7.26
C0411-068-2375-M	0.411	10.44	0.068	1.73	2.375	60.33	1.596	40.54	1.532	38.90	30.50	135.65	39.16	6.85
C0411-068-2500-M	0.411	10.44	0.068	1.73	2.500	63.50	1.678	42.61	1.609	40.87	30.50	135.65	37.09	6.49
C0411-068-2625-M	0.411	10.44	0.068	1.73	2.625	66.68	1.759	44.68	1.687	42.84	30.50	135.65	35.22	6.16
C0411-068-2750-M	0.411	10.44	0.068	1.73	2.750	69.85	1.841	46.75	1.764	44.81	30.50	135.65	33.54	5.87
C0411-068-2875-M	0.411	10.44	0.068	1.73	2.875	73.03	1.922	48.82	1.842	46.78	30.50	135.65	32.01	5.60
C0411-068-3000-M	0.411	10.44	0.068	1.73	3.000	76.20	2.004	50.90	1.919	48.75	30.50	135.65	30.61	5.36
C0411-068-3250-M	0.411	10.44	0.068	1.73	3.250	82.55	2.167	55.04	2.074	52.69	30.50	135.65	28.15	4.93
C0411-068-3500-M	0.411	10.44	0.068	1.73	3.500	88.90	2.330	59.18	2.230	56.63	30.50	135.65	26.06	4.56
C0411-068-3750-M	0.411	10.44	0.068	1.73	3.750	95.25	2.493	63.32	2.385	60.57	30.50	135.65	24.26	4.25
C0411-068-4000-M	0.411	10.44	0.068	1.73	4.000	101.60	2.656	67.46	2.540	64.51	30.50	135.65	22.69	3.97
C0411-068-4250-M	0.411	10.44	0.068	1.73	4.250	107.95	2.819	71.60	2.695	68.45	30.50	135.65	21.31	3.73
C0411-068-4500-M	0.411	10.44	0.068	1.73	4.500	114.30	2.982	75.74	2.850	72.39	30.50	135.65	20.09	3.52
C0411-068-4750-M	0.411	10.44	0.068	1.73	4.750	120.65	3.145	79.88	3.005	76.32	30.50	135.65	19.00	3.33
C0411-068-5000-M	0.411	10.44	0.068	1.73	5.000	127.00	3.308	84.02	3.160	80.26	30.50	135.65	18.02	3.15
C0411-068-5250-M	0.411	10.44	0.068	1.73	5.250	133.35	3.471	88.17	3.315	84.20	30.50	135.65	17.14	3.00
C0411-068-5500-M	0.411	10.44	0.068	1.73	5.500	139.70	3.634	92.31	3.470	88.14	30.50	135.65	16.34	2.86
C0411-068-5750-M	0.411	10.44	0.068	1.73	5.750	146.05	3.797	96.45	3.625	92.08	30.50	135.65	15.62	2.73
C0411-068-6000-M	0.411	10.44	0.068	1.73	6.000	152.40	3.960	100.59	3.780	96.02	30.50	135.65	14.95	2.62
C0411-068-6250-M	0.411	10.44	0.068	1.73	6.250	158.75	4.123	104.73	3.935	99.96	30.50	135.65	14.34	2.51
C0411-068-6500-M	0.411	10.44	0.068	1.73	6.500	165.10	4.286	108.87	4.090	103.90	30.50	135.65	13.78	2.41
C0411-068-6750-M	0.411	10.44	0.068	1.73	6.750	171.45	4.449	113.01	4.245	107.84	30.50	135.65	13.26	2.32
C0411-072-0625-M	0.411	10.44	0.072	1.83	0.625	15.88	0.474	12.04	0.470	11.93	35.58	158.25	235.45	41.20
C0411-072-0688-M	0.411	10.44	0.072	1.83	0.688	17.46	0.517	13.13	0.511	12.98	35.58	158.25	208.37	36.47
C0411-072-0750-M	0.411	10.44	0.072	1.83	0.750	19.05	0.560	14.21	0.552	14.03	35.58	158.25	186.88	32.70
C0411-072-0813-M	0.411	10.44	0.072	1.83	0.813	20.64	0.602	15.30	0.594	15.08	35.58	158.25	169.41	29.65
C0411-072-0875-M	0.411	10.44	0.072	1.83	0.875	22.23	0.645	16.39	0.635	16.13	35.58	158.25	154.93	27.11
C0411-072-0938-M	0.411	10.44	0.072	1.83	0.938	23.81	0.688	17.48	0.676	17.18	35.58	158.25	142.72	24.98
C0411-072-1000-M	0.411	10.44	0.072	1.83	1.000	25.40	0.731	18.57	0.718	18.23	35.58	158.25	132.30	23.15
C0411-072-1125-M	0.411	10.44	0.072	1.83	1.125	28.58	0.817	20.75	0.801	20.33	35.58	158.25	115.44	20.20
C0411-072-1250-M	0.411	10.44	0.072	1.83	1.250	31.75	0.903	22.93	0.883	22.44	35.58	158.25	102.40	17.92
C0411-072-1375-M	0.411	10.44	0.072	1.83	1.375	34.93	0.988	25.10	0.966	24.54	35.58	158.25	92.00	16.10
C0411-072-1500-M	0.411	10.44	0.072	1.83	1.500	38.10	1.074	27.28	1.049	26.64	35.58	158.25	83.52	14.62
C0411-072-1625-M	0.411	10.44	0.072	1.83	1.625	41.28	1.160	29.46	1.132	28.74	35.58	158.25	76.47	13.38
C0411-072-1750-M	0.411	10.44	0.072	1.83	1.750	44.45	1.245	31.64	1.214	30.84	35.58	158.25	70.52	12.34
C0411-072-1875-M	0.411	10.44	0.072	1.83	1.875	47.63	1.331	33.81	1.297	32.94	35.58	158.25	65.43	11.45
C0411-072-2000-M	0.411	10.44	0.072	1.83	2.000	50.80	1.417	35.99	1.380	35.05	35.58	158.25	61.02	10.68
C0411-072-2125-M	0.411	10.44	0.072	1.83	2.125	53.98	1.503	38.17	1.463	37.15	35.58	158.25	57.17	10.00
C0411-072-2250-M	0.411	10.44	0.072	1.83	2.250	57.15	1.588	40.35	1.545	39.25	35.58	158.25	53.78	9.41
C0411-072-2375-M	0.411	10.44	0.072	1.83	2.375	60.33	1.674	42.52	1.628	41.35	35.58	158.25	50.76	8.88
C0411-072-2500-M	0.411	10.44	0.072	1.83	2.500	63.50	1.760	44.70	1.711	43.45	35.58	158.25	48.07	8.41
C0411-072-2625-M	0.411	10.44	0.072	1.83	2.625	66.68	1.846	46.88	1.793	45.55	35.58	158.25	45.65	7.99
C0411-072-2750-M	0.411	10.44	0.072	1.83	2.750	69.85	1.931	49.06	1.876	47.66	35.58	158.25	43.46	7.61
C0411-072-2875-M	0.411	10.44	0.072	1.83	2.875	73.03	2.017	51.23	1.959	49.76	35.58	158.25	41.47	7.26
C0411-072-3000-M	0.411	10.44	0.072	1.83	3.000	76.20	2.103	53.41	2.042	51.86	35.58	158.25	39.65	6.94
C0411-072-3250-M	0.411	10.44	0.072	1.83	3.250	82.55	2.274	57.77	2.207	56.06	35.58	158.25	36.46	6.38
C0411-072-3500-M	0.411	10.44	0.072	1.83	3.500	88.90	2.446	62.12	2.373	60.27	35.58	158.25	33.75	5.91
C0411-072-3750-M	0.411	10.44	0.072	1.83	3.750	95.25	2.617	66.48	2.538	64.47	35.58	158.25	31.41	5.50
C0411-072-4000-M	0.411	10.44	0.072	1.83	4.000	101.60	2.789	70.83	2.704	68.67	35.58	158.25	29.37	5.14
C0411-072-4250-M	0.411	10.44	0.072	1.83	4.250	107.95	2.960	75.19	2.869	72.88	35.58	158.25	27.58	4.83
C0411-072-4500-M	0.411	10.44	0.072	1.83	4.500	114.30	3.132	79.54	3.035	77.08	35.58	158.25	26.00	4.55
C0411-072-4750-M	0.411	10.44	0.072	1.83	4.750	120.65	3.303	83.90	3.200	81.28	35.58	158.25	24.59	4.30
C0411-072-5000-M	0.411	10.44	0.072	1.83	5.000	127.00	3.475	88.25	3.366	85.49	35.58	158.25	23.32	4.08

STAINLESS STEEL

Catalog #	Load Length (L_1)		Load (P) at L_1		Spring Rate (R)	
	in	mm	lb	N	lb/in	N/mm
C0411-068-0938-S	0.684	17.36	24.15	107.41	95.12	16.65
C0411-068-1000-S	0.726	18.45	24.15	107.41	88.24	15.44
C0411-068-1125-S	0.812	20.62	24.15	107.41	77.08	13.49
C0411-068-1250-S	0.897	22.79	24.15	107.41	68.43	11.98
C0411-068-1375-S	0.983	24.96	24.15	107.41	61.53	10.77
C0411-068-1500-S	1.068	27.13	24.15	107.41	55.89	9.78
C0411-068-1625-S	1.153	29.30	24.15	107.41	51.20	8.96
C0411-068-1750-S	1.239	31.46	24.15	107.41	47.23	8.27
C0411-068-1875-S	1.324	33.63	24.15	107.41	43.84	7.67
C0411-068-2000-S	1.410	35.80	24.15	107.41	40.90	7.16
C0411-068-2125-S	1.495	37.97	24.15	107.41	38.33	6.71
C0411-068-2250-S	1.580	40.14	24.15	107.41	36.06	6.31
C0411-068-2375-S	1.666	42.31	24.15	107.41	34.05	5.96
C0411-068-2500-S	1.751	44.48	24.15	107.41	32.25	5.64
C0411-068-2625-S	1.837	46.65	24.15	107.41	30.63	5.36
C0411-068-2750-S	1.922	48.82	24.15	107.41	29.16	5.10
C0411-068-2875-S	2.007	50.99	24.15	107.41	27.83	4.87
C0411-068-3000-S	2.093	53.16	24.15	107.41	26.62	4.66
C0411-068-3250-S	2.264	57.50	24.15	107.41	24.48	4.28
C0411-068-3500-S	2.434	61.84	24.15	107.41	22.66	3.97
C0411-068-3750-S	2.605	66.17	24.15	107.41	21.09	3.69
C0411-068-4000-S	2.776	70.51	24.15	107.41	19.73	3.45
C0411-068-4250-S	2.947	74.85	24.15	107.41	18.53	3.24
C0411-068-4500-S	3.118	79.19	24.15	107.41	17.47	3.06
C0411-068-4750-S	3.289	83.53	24.15	107.41	16.52	2.89
C0411-068-5000-S	3.459	87.87	24.15	107.41	15.67	2.74
C0411-068-5250-S	3.630	92.21	24.15	107.41	14.91	2.61
C0411-068-5500-S	3.801	96.55	24.15	107.41	14.21	2.49
C0411-068-5750-S	3.972	100.88	24.15	107.41	13.58	2.38
C0411-068-6000-S	4.143	105.22	24.15	107.41	13.00	2.28
C0411-068-6250-S	4.313	109.56	24.15	107.41	12.47	2.18
C0411-068-6500-S	4.484	113.90	24.15	107.41	11.98	2.10
C0411-068-6750-S	4.655	118.24	24.15	107.41	11.53	2.02
C0411-072-0625-S	0.488	12.39	28.12	125.08	204.74	35.83
C0411-072-0688-S	0.532	13.52	28.12	125.08	181.19	31.71
C0411-072-0750-S	0.577	14.66	28.12	125.08	162.51	28.44
C0411-072-0813-S	0.622	15.79	28.12	125.08	147.31	25.78
C0411-072-0875-S	0.666	16.92	28.12	125.08	134.72	23.58
C0411-072-0938-S	0.711	18.06	28.12	125.08	124.11	21.72
C0411-072-1000-S	0.756	19.19	28.12	125.08	115.05	20.13
C0411-072-1125-S	0.845	21.46	28.12	125.08	100.39	17.57
C0411-072-1250-S	0.934	23.73	28.12	125.08	89.04	15.58
C0411-072-1375-S	1.024	26.00	28.12	125.08	80.00	14.00
C0411-072-1500-S	1.113	28.27	28.12	125.08	72.62	12.71
C0411-072-1625-S	1.202	30.53	28.12	125.08	66.50	11.64
C0411-072-1750-S	1.291	32.80	28.12	125.08	61.32	10.73
C0411-072-1875-S	1.381	35.07	28.12	125.08	56.89	9.96
C0411-072-2000-S	1.470	37.34	28.12	125.08	53.06	9.29
C0411-072-2125-S	1.559	39.61	28.12	125.08	49.71	8.70
C0411-072-2250-S	1.649	41.88	28.12	125.08	46.76	8.18
C0411-072-2375-S	1.738	44.14	28.12	125.08	44.14	7.72
C0411-072-2500-S	1.827	46.41	28.12	125.08	41.80	7.31
C0411-072-2625-S	1.917	48.68	28.12	125.08	39.69	6.95
C0411-072-2750-S	2.006	50.95	28.12	125.08	37.79	6.61
C0411-072-2875-S	2.095	53.22	28.12	125.08	36.06	6.31
C0411-072-3000-S	2.185	55.49	28.12	125.08	34.48	6.03
C0411-072-3250-S	2.363	60.02	28.12	125.08	31.71	5.55
C0411-072-3500-S	2.542	64.56	28.12	125.08	29.34	5.14
C0411-072-3750-S	2.720	69.10	28.12	125.08	27.31	4.78
C0411-072-4000-S	2.899	73.63	28.12	125.08	25.54	4.47
C0411-072-4250-S	3.078	78.17	28.12	125.08	23.98	4.20
C0411-072-4500-S	3.256	82.71	28.12	125.08	22.61	3.96
C0411-072-4750-S	3.435	87.25	28.12	125.08	21.38	3.74
C0411-072-5000-S	3.613	91.78	28.12	125.08	20.28	3.55

FOR INFORMATION ON ALTERNATIVE FINISHES, SEE PAGE 311

Part Numbers with an "*" are squared and not ground. **Part Numbers in bold** represent the newly expanded Associated Spring RAYMOND compression spring offering.

MUSIC WIRE															STAINLESS STEEL						
Catalog #	Outside Diameter (OD)		Wire Diameter (d)		Free Length (L) Approx		Load Length (L_1)		Solid Height (Sh) Approx		Load (P) at L_1		Spring Rate (R)		Catalog #	Load Length (L_1)		Load (P) at L_1		Spring Rate (R)	
	in	mm	in	mm	in	mm	in	mm	in	mm	lb	N	lb/in	N/mm		in	mm	lb	N	lb/in	N/mm
C0411-072-5250-M	**0.411**	**10.44**	**0.072**	**1.83**	**5.250**	**133.35**	**3.646**	**92.61**	**3.531**	**89.69**	**35.58**	**158.25**	**22.18**	**3.88**	**C0411-072-5250-S**	**3.792**	**96.32**	**28.12**	**125.08**	**19.29**	**3.38**
C0411-072-5500-M	**0.411**	**10.44**	**0.072**	**1.83**	**5.500**	**139.70**	**3.817**	**96.96**	**3.697**	**93.89**	**35.58**	**158.25**	**21.15**	**3.70**	**C0411-072-5500-S**	**3.971**	**100.86**	**28.12**	**125.08**	**18.39**	**3.22**
C0411-072-5750-M	**0.411**	**10.44**	**0.072**	**1.83**	**5.750**	**146.05**	**3.989**	**101.32**	**3.862**	**98.10**	**35.58**	**158.25**	**20.20**	**3.54**	**C0411-072-5750-S**	**4.149**	**105.39**	**28.12**	**125.08**	**17.57**	**3.07**
C0411-072-6000-M	**0.411**	**10.44**	**0.072**	**1.83**	**6.000**	**152.40**	**4.160**	**105.67**	**4.028**	**102.30**	**35.58**	**158.25**	**19.34**	**3.38**	**C0411-072-6000-S**	**4.328**	**109.93**	**28.12**	**125.08**	**16.82**	**2.94**
C0411-072-6250-M	**0.411**	**10.44**	**0.072**	**1.83**	**6.250**	**158.75**	**4.332**	**110.03**	**4.193**	**106.50**	**35.58**	**158.25**	**18.55**	**3.25**	**C0411-072-6250-S**	**4.507**	**114.47**	**28.12**	**125.08**	**16.13**	**2.82**
C0411-072-6500-M	**0.411**	**10.44**	**0.072**	**1.83**	**6.500**	**165.10**	**4.503**	**114.38**	**4.359**	**110.71**	**35.58**	**158.25**	**17.82**	**3.12**	**C0411-072-6500-S**	**4.685**	**119.00**	**28.12**	**125.08**	**15.49**	**2.71**
C0411-072-6750-M	**0.411**	**10.44**	**0.072**	**1.83**	**6.750**	**171.45**	**4.675**	**118.74**	**4.524**	**114.91**	**35.58**	**158.25**	**17.14**	**3.00**	**C0411-072-6750-S**	**4.864**	**123.54**	**28.12**	**125.08**	**14.91**	**2.61**
C0420-035-0500-M	0.420	10.67	0.035	0.89	0.500	12.70	0.250	6.35	0.172	4.37	4.95	22.02	19.70	3.45	C0420-035-0500-S	0.302	7.67	3.25	14.45	16.41	2.87
C0420-035-0620-M	0.420	10.67	0.035	0.89	0.620	15.75	0.300	7.62	0.191	4.85	4.95	22.02	15.40	2.70	C0420-035-0620-S	0.367	9.32	3.25	14.45	12.83	2.24
C0420-035-0750-M	0.420	10.67	0.035	0.89	0.750	19.05	0.354	8.99	0.211	5.36	4.95	22.02	12.50	2.19	C0420-035-0750-S	0.438	11.13	3.25	14.45	10.41	1.82
C0420-035-0880-M	0.420	10.67	0.035	0.89	0.880	22.35	0.408	10.36	0.231	5.87	4.95	22.02	10.50	1.84	C0420-035-0880-S	0.509	12.92	3.25	14.45	8.75	1.53
C0420-035-1000-M	0.420	10.67	0.035	0.89	1.000	25.40	0.458	11.63	0.250	6.35	4.95	22.02	9.10	1.59	C0420-035-1000-S	0.571	14.52	3.25	14.45	7.58	1.33
C0420-035-1250-M	0.420	10.67	0.035	0.89	1.250	31.75	0.563	14.30	0.289	7.34	4.95	22.02	7.20	1.26	C0420-035-1250-S	0.708	17.99	3.25	14.45	6.00	1.05
C0420-035-1500-M	0.420	10.67	0.035	0.89	1.500	38.10	0.667	16.94	0.328	8.33	4.95	22.02	5.90	1.03	C0420-035-1500-S	0.839	21.31	3.25	14.45	4.92	0.86
C0420-035-1750-M	0.420	10.67	0.035	0.89	1.750	44.45	0.771	19.58	0.367	9.32	4.95	22.02	5.10	0.89	C0420-035-1750-S	0.985	25.03	3.25	14.45	4.25	0.74
C0420-038-0500-M	0.420	10.67	0.038	0.97	0.500	12.70	0.200	5.08	0.172	4.37	6.60	29.36	22.00	3.85	C0420-038-0500-S	0.278	7.06	4.07	18.09	18.33	3.21
C0420-038-0560-M	0.420	10.67	0.038	0.97	0.560	14.22	0.230	5.84	0.186	4.72	6.60	29.36	20.00	3.50	C0420-038-0560-S	0.316	8.02	4.07	18.09	16.66	2.92
C0420-038-0625-M	0.420	10.67	0.038	0.97	0.620	15.75	0.253	6.43	0.194	4.93	6.60	29.36	18.00	3.15	C0420-038-0625-S	0.349	8.86	4.07	18.09	14.99	2.62
C0420-038-0750-M	0.420	10.67	0.038	0.97	0.750	19.05	0.295	7.49	0.223	5.66	6.60	29.36	14.50	2.54	C0420-038-0750-S	0.413	10.50	4.07	18.09	12.08	2.11
C0420-038-0880-M	0.420	10.67	0.038	0.97	0.880	22.35	0.352	8.94	0.246	6.25	6.60	29.36	12.50	2.19	C0420-038-0880-S	0.489	12.43	4.07	18.09	10.41	1.82
C0420-038-1000-M	0.420	10.67	0.038	0.97	1.000	25.40	0.400	10.16	0.269	6.83	6.60	29.36	11.00	1.93	C0420-038-1000-S	0.556	14.12	4.07	18.09	9.16	1.60
C0420-038-1250-M	0.420	10.67	0.038	0.97	1.250	31.75	0.475	12.07	0.326	8.28	6.60	29.36	8.50	1.49	C0420-038-1250-S	0.675	17.16	4.07	18.09	7.08	1.24
C0420-038-1500-M	0.420	10.67	0.038	0.97	1.500	38.10	0.580	14.73	0.372	9.45	6.60	29.36	7.20	1.26	C0420-038-1500-S	0.822	20.87	4.07	18.09	6.00	1.05
C0420-038-1750-M	0.420	10.67	0.038	0.97	1.750	44.45	0.750	19.05	0.423	10.74	6.60	29.36	6.60	1.16	C0420-038-1750-S	1.010	25.66	4.07	18.09	5.50	0.96
C0420-038-2000-M	0.420	10.67	0.038	0.97	2.000	50.80	0.917	23.29	0.456	11.58	6.60	29.36	6.10	1.07	C0420-038-2000-S	1.199	30.47	4.07	18.09	5.08	0.89
C0420-038-2250-M	0.420	10.67	0.038	0.97	2.250	57.15	1.027	26.09	0.494	12.55	6.60	29.36	5.40	0.95	C0420-038-2250-S	1.346	34.18	4.07	18.09	4.50	0.79
C0420-038-2500-M	0.420	10.67	0.038	0.97	2.500	63.50	1.136	28.85	0.532	13.51	6.60	29.36	4.80	0.84	C0420-038-2500-S	1.483	37.66	4.07	18.09	4.00	0.70
C0420-042-0500-M	0.420	10.67	0.042	1.07	0.500	12.70	0.238	6.05	0.190	4.83	8.90	39.59	34.00	5.95	C0420-042-0500-S	0.309	7.85	5.40	24.04	28.32	4.96
C0420-042-0560-M	0.420	10.67	0.042	1.07	0.560	14.22	0.272	6.91	0.201	5.11	8.90	39.59	31.00	5.43	C0420-042-0560-S	0.351	8.91	5.40	24.04	25.82	4.52
C0420-042-0625-M	0.420	10.67	0.042	1.07	0.620	15.75	0.302	7.67	0.213	5.41	8.90	39.59	28.00	4.90	C0420-042-0625-S	0.388	9.86	5.40	24.04	23.32	4.08
C0420-042-0750-M	0.420	10.67	0.042	1.07	0.750	19.05	0.345	8.76	0.248	6.30	8.90	39.59	22.00	3.85	C0420-042-0750-S	0.455	11.56	5.40	24.04	18.33	3.21
C0420-042-0880-M	0.420	10.67	0.042	1.07	0.880	22.35	0.395	10.03	0.280	7.11	8.90	39.59	18.50	3.24	C0420-042-0880-S	0.529	13.44	5.40	24.04	15.41	2.70
C0420-042-1000-M	0.420	10.67	0.042	1.07	1.000	25.40	0.445	11.30	0.310	7.87	8.90	39.59	16.00	2.80	C0420-042-1000-S	0.594	15.10	5.40	24.04	13.33	2.33
C0420-042-1250-M	0.420	10.67	0.042	1.07	1.250	31.75	0.565	14.35	0.363	9.22	8.90	39.59	13.00	2.28	C0420-042-1250-S	0.751	19.07	5.40	24.04	10.83	1.90
C0420-042-1500-M	0.420	10.67	0.042	1.07	1.500	38.10	0.650	16.51	0.429	10.90	8.90	39.59	10.50	1.84	C0420-042-1500-S	0.882	22.40	5.40	24.04	8.75	1.53
C0420-042-1750-M	0.420	10.67	0.042	1.07	1.750	44.45	0.793	20.14	0.501	12.73	8.90	39.59	9.30	1.63	C0420-042-1750-S	1.052	26.73	5.40	24.04	7.75	1.36
C0420-042-2000-M	0.420	10.67	0.042	1.07	2.000	50.80	0.901	22.89	0.558	14.17	8.90	39.59	8.10	1.42	C0420-042-2000-S	1.199	30.45	5.40	24.04	6.75	1.18
C0420-042-2250-M	0.420	10.67	0.042	1.07	2.250	57.15	1.092	27.74	0.592	15.04	8.90	39.59	7.70	1.35	C0420-042-2250-S	1.407	35.75	5.40	24.04	6.41	1.12
C0420-042-2500-M	0.420	10.67	0.042	1.07	2.500	63.50	1.209	30.71	0.630	16.00	8.90	39.59	6.90	1.21	C0420-042-2500-S	1.560	39.62	5.40	24.04	5.75	1.01
C0420-045-0500-M	0.420	10.67	0.045	1.14	0.500	12.70	0.250	6.35	0.214	5.44	10.50	46.71	42.00	7.35	C0420-045-0500-S	0.314	7.98	6.50	28.91	34.99	6.12
C0420-045-0625-M	0.420	10.67	0.045	1.14	0.620	15.75	0.311	7.90	0.244	6.20	10.50	46.71	34.00	5.95	C0420-045-0625-S	0.391	9.92	6.50	28.91	28.32	4.96
C0420-045-0750-M	0.420	10.67	0.045	1.14	0.750	19.05	0.360	9.14	0.284	7.21	10.50	46.71	27.00	4.73	C0420-045-0750-S	0.461	11.71	6.50	28.91	22.49	3.94
C0420-045-0880-M	0.420	10.67	0.045	1.14	0.880	22.35	0.420	10.67	0.318	8.08	10.50	46.71	23.00	4.03	C0420-045-0880-S	0.541	13.74	6.50	28.91	19.16	3.35
C0420-045-1000-M	0.420	10.67	0.045	1.14	1.000	25.40	0.475	12.07	0.352	8.94	10.50	46.71	20.00	3.50	C0420-045-1000-S	0.610	15.49	6.50	28.91	16.66	2.92
C0420-045-1250-M	0.420	10.67	0.045	1.14	1.250	31.75	0.595	15.11	0.418	10.62	10.50	46.71	16.00	2.80	C0420-045-1250-S	0.762	19.36	6.50	28.91	13.33	2.33
C0420-045-1500-M	0.420	10.67	0.045	1.14	1.500	38.10	0.690	17.53	0.493	12.52	10.50	46.71	13.00	2.28	C0420-045-1500-S	0.900	22.86	6.50	28.91	10.83	1.90
C0420-045-1750-M	0.420	10.67	0.045	1.14	1.750	44.45	0.860	21.84	0.563	14.30	10.50	46.71	11.80	2.07	C0420-045-1750-S	1.089	27.66	6.50	28.91	9.83	1.72
C0420-045-2000-M	0.420	10.67	0.045	1.14	2.000	50.80	0.971	24.66	0.627	15.93	10.50	46.71	10.20	1.79	C0420-045-2000-S	1.235	31.37	6.50	28.91	8.50	1.49
C0420-045-2250-M	0.420	10.67	0.045	1.14	2.250	57.15	1.083	27.51	0.691	17.55	10.50	46.71	9.00	1.58	C0420-045-2250-S	1.383	35.13	6.50	28.91	7.50	1.31
C0420-045-2500-M	0.420	10.67	0.045	1.14	2.500	63.50	1.204	30.58	0.756	19.20	10.50	46.71	8.10	1.42	C0420-045-2500-S	1.537	39.03	6.50	28.91	6.75	1.18
C0420-048-0500-M	0.420	10.67	0.048	1.22	0.500	12.70	0.302	7.67	0.261	6.63	11.97	53.25	60.60	10.61	C0420-048-0500-S	0.344	8.75	7.86	34.94	50.48	8.83
C0420-048-0750-M	0.420	10.67	0.048	1.22	0.750	19.05	0.430	10.92	0.334	8.48	11.97	53.25	37.40	6.55	C0420-048-0750-S	0.498	12.65	7.86	34.94	31.15	5.45
C0420-048-1000-M	0.420	10.67	0.048	1.22	1.000	25.40	0.558	14.17	0.407	10.34	11.97	53.25	27.10	4.74	C0420-048-1000-S	0.652	16.56	7.86	34.94	22.57	3.95
C0420-048-1250-M	0.420	10.67	0.048	1.22	1.250	31.75	0.685	17.40	0.480	12.19	11.97	53.25	21.20	3.71	C0420-048-1250-S	0.805	20.45	7.86	34.94	17.66	3.09
C0420-048-1500-M	0.420	10.67	0.048	1.22	1.500	38.10	0.813	20.65	0.552	14.02	11.97	53.25	17.40	3.05	C0420-048-1500-S	0.958	24.33	7.86	34.94	14.49	2.54
C0420-048-1750-M	0.420	10.67	0.048	1.22	1.750	44.45	0.941	23.90	0.625	15.88	11.97	53.25	14.80	2.59	C0420-048-1750-S	1.113	28.27	7.86	34.94	12.33	2.16
C0420-048-2000-M	0.420	10.67	0.048	1.22	2.000	50.80	1.068	27.13	0.698	17.73	11.97	53.25	12.90	2.26	C0420-048-2000-S	1.269	32.23	7.86	34.94	10.75	1.88
C0420-051-0500-M	0.420	10.67	0.051	1.30	0.500	12.70	0.315	8.00	0.282	7.16	14.17	63.03	76.40	13.37	C0420-051-0500-S	0.354	8.98	9.31	41.42	63.64	11.14
C0420-051-0620-M	0.420	10.67	0.051	1.30	0.620	15.75	0.379	9.63	0.321	8.15	14.17	63.03	58.70	10.27	C0420-051-0620-S	0.430	10.91	9.31	41.42	48.90	8.56
C0420-051-0750-M	0.420	10.67	0.051	1.30	0.750	19.05	0.448	11.38	0.363	9.22	14.17	63.03	46.90	8.21	C0420-051-0750-S	0.512	13.00	9.31	41.42	39.07	6.84
C0420-051-0880-M	0.420	10.67	0.051	1.30	0.880	22.35	0.517	13.13	0.406	10.31	14.17	63.03	39.10	6.84	C0420-051-0880-S	0.594	15.09	9.31	41.42	32.57	5.70
C0420-051-1000-M	0.420	10.67	0.051	1.30	1.000	25.40	0.582	14.78	0.445	11.30	14.17	63.03	33.90	5.93	C0420-051-1000-S	0.670	17.02	9.31	41.42	28.24	4.94
C0420-051-1250-M	0.420	10.67	0.051	1.30	1.250	31.75	0.715	18.16	0.526	13.36	14.17	63.03	26.50	4.64	C0420-051-1250-S	0.828	21.04	9.31	41.42	22.08	3.86
C0420-051-1500-M	0.420	10.67	0.051	1.30	1.500	38.10	0.849	21.56	0.607	15.42	14.17	63.03	21.70	3.80	C0420-051-1500-S	0.985	25.02	9.31	41.42	18.08	3.16

Part Numbers with an "*" are squared and not ground. **Part Numbers in bold** represent the newly expanded Associated Spring RAYMOND compression spring offering.

MUSIC WIRE															STAINLESS STEEL					
Catalog #	Outside Diameter (OD)		Wire Diameter (d)		Free Length (L) Approx		Load Length (L_1)		Solid Height (Sh) Approx		Load (P) at L_1		Spring Rate (R)		Catalog #	Load Length (L_1)		Load (P) at L_1		Spring Rate (R)	
	in	mm	in	mm	in	mm	in	mm	in	mm	lb	N	lb/in	N/mm		in	mm	lb	N	lb/in	N/mm
C0420-051-1750-M	0.420	10.67	0.051	1.30	1.750	44.45	0.982	24.94	0.688	17.48	14.17	63.03	18.40	3.22	C0420-051-1750-S	1.142	29.02	9.31	41.42	15.33	2.68
C0420-051-2000-M	0.420	10.67	0.051	1.30	2.000	50.80	1.116	28.35	0.769	19.53	14.17	63.03	16.00	2.80	C0420-051-2000-S	1.301	33.05	9.31	41.42	13.33	2.33
C0420-051-2250-M	0.420	10.67	0.051	1.30	2.250	57.15	1.249	31.72	0.850	21.59	14.17	63.03	14.20	2.49	C0420-051-2250-S	1.463	37.15	9.31	41.42	11.83	2.07
C0420-051-2500-M	0.420	10.67	0.051	1.30	2.500	63.50	1.383	35.13	0.932	23.67	14.17	63.03	12.70	2.22	C0420-051-2500-S	1.620	41.14	9.31	41.42	10.58	1.85
C0420-055-0500-M	0.420	10.67	0.055	1.40	0.500	12.70	0.310	7.87	0.273	6.93	18.00	80.07	95.00	16.63	C0420-055-0500-S	0.356	9.03	11.43	50.86	79.14	13.85
C0420-055-0625-M	0.420	10.67	0.055	1.40	0.620	15.75	0.380	9.65	0.316	8.03	18.00	80.07	75.00	13.13	C0420-055-0625-S	0.437	11.10	11.43	50.86	62.48	10.93
C0420-055-0750-M	0.420	10.67	0.055	1.40	0.750	19.05	0.460	11.68	0.360	9.14	18.00	80.07	62.00	10.85	C0420-055-0750-S	0.529	13.43	11.43	50.86	51.65	9.04
C0420-055-0880-M	0.420	10.67	0.055	1.40	0.880	22.35	0.534	13.56	0.408	10.36	18.00	80.07	52.00	9.10	C0420-055-0880-S	0.616	15.65	11.43	50.86	43.32	7.58
C0420-055-1000-M	0.420	10.67	0.055	1.40	1.000	25.40	0.600	15.24	0.454	11.53	18.00	80.07	45.00	7.88	C0420-055-1000-S	0.695	17.65	11.43	50.86	37.49	6.56
C0420-055-1250-M	0.420	10.67	0.055	1.40	1.250	31.75	0.735	18.67	0.553	14.05	18.00	80.07	35.00	6.13	C0420-055-1250-S	0.858	21.79	11.43	50.86	29.16	5.10
C0420-055-1500-M	0.420	10.67	0.055	1.40	1.500	38.10	0.880	22.35	0.645	16.38	18.00	80.07	29.00	5.08	C0420-055-1500-S	1.027	26.08	11.43	50.86	24.16	4.23
C0420-055-1750-M	0.420	10.67	0.055	1.40	1.750	44.45	1.015	25.78	0.772	19.61	18.00	80.07	24.50	4.29	C0420-055-1750-S	1.190	30.22	11.43	50.86	20.41	3.57
C0420-055-2000-M	0.420	10.67	0.055	1.40	2.000	50.80	1.155	29.34	0.865	21.97	18.00	80.07	21.30	3.73	C0420-055-2000-S	1.356	34.43	11.43	50.86	17.74	3.11
C0420-055-2250-M	0.420	10.67	0.055	1.40	2.250	57.15	1.290	32.77	0.957	24.31	18.00	80.07	18.80	3.29	C0420-055-2250-S	1.520	38.60	11.43	50.86	15.66	2.74
C0420-055-2500-M	0.420	10.67	0.055	1.40	2.500	63.50	1.430	36.32	1.050	26.67	18.00	80.07	16.80	2.94	C0420-055-2500-S	1.683	42.75	11.43	50.86	13.99	2.45
C0420-059-0500-M	0.420	10.67	0.059	1.50	0.500	12.70	0.345	8.76	0.322	8.18	21.20	94.30	136.70	23.92	C0420-059-0500-S	0.378	9.61	13.87	61.68	113.87	19.93
C0420-059-0625-M	0.420	10.67	0.059	1.50	0.620	15.75	0.414	10.52	0.380	9.65	21.20	94.30	103.00	18.03	C0420-059-0625-S	0.458	11.64	13.87	61.68	85.80	15.01
C0420-059-0750-M	0.420	10.67	0.059	1.50	0.750	19.05	0.493	12.52	0.439	11.15	21.20	94.30	82.60	14.46	C0420-059-0750-S	0.548	13.93	13.87	61.68	68.81	12.04
C0420-059-0880-M	0.420	10.67	0.059	1.50	0.880	22.35	0.571	14.50	0.496	12.60	21.20	94.30	68.50	11.99	C0420-059-0880-S	0.637	16.18	13.87	61.68	57.06	9.99
C0420-059-1000-M	0.420	10.67	0.059	1.50	1.000	25.40	0.642	16.31	0.546	13.87	21.20	94.30	59.20	10.36	C0420-059-1000-S	0.719	18.26	13.87	61.68	49.31	8.63
C0420-059-1250-M	0.420	10.67	0.059	1.50	1.250	31.75	0.790	20.07	0.651	16.54	21.20	94.30	46.10	8.07	C0420-059-1250-S	0.889	22.58	13.87	61.68	38.40	6.72
C0420-059-1500-M	0.420	10.67	0.059	1.50	1.500	38.10	0.939	23.85	0.755	19.18	21.20	94.30	37.80	6.62	C0420-059-1500-S	1.060	26.91	13.87	61.68	31.49	5.51
C0420-059-1750-M	0.420	10.67	0.059	1.50	1.750	44.45	1.087	27.61	0.860	21.84	21.20	94.30	32.00	5.60	C0420-059-1750-S	1.230	31.24	13.87	61.68	26.66	4.66
C0420-059-2000-M	0.420	10.67	0.059	1.50	2.000	50.80	1.236	31.39	0.965	24.51	21.20	94.30	27.70	4.85	C0420-059-2000-S	1.399	35.54	13.87	61.68	23.07	4.04
C0420-059-2250-M	0.420	10.67	0.059	1.50	2.250	57.15	1.384	35.15	1.069	27.15	21.20	94.30	24.50	4.29	C0420-059-2250-S	1.571	39.89	13.87	61.68	20.41	3.57
C0420-059-2500-M	0.420	10.67	0.059	1.50	2.500	63.50	1.532	38.91	1.174	29.82	21.20	94.30	21.90	3.83	C0420-059-2500-S	1.740	44.19	13.87	61.68	18.24	3.19
C0420-063-0500-M	0.420	10.67	0.063	1.60	0.500	12.70	0.361	9.17	0.345	8.76	25.37	112.85	182.10	31.87	C0420-063-0500-S	0.392	9.96	16.38	72.87	151.69	26.55
C0420-063-0620-M	0.420	10.67	0.063	1.60	0.620	15.75	0.436	11.07	0.416	10.57	25.37	112.85	137.90	24.13	C0420-063-0620-S	0.477	12.13	16.38	72.87	114.87	20.10
C0420-063-0750-M	0.420	10.67	0.063	1.60	0.750	19.05	0.518	13.16	0.476	12.09	25.37	112.85	109.20	19.11	C0420-063-0750-S	0.570	14.48	16.38	72.87	90.96	15.92
C0420-063-0880-M	0.420	10.67	0.063	1.60	0.880	22.35	0.599	15.21	0.536	13.61	25.37	112.85	90.30	15.80	C0420-063-0880-S	0.662	16.82	16.38	72.87	75.22	13.16
C0420-063-1000-M	0.420	10.67	0.063	1.60	1.000	25.40	0.675	17.15	0.591	15.01	25.37	112.85	77.90	13.63	C0420-063-1000-S	0.748	18.99	16.38	72.87	64.89	11.36
C0420-063-1250-M	0.420	10.67	0.063	1.60	1.250	31.75	0.831	21.11	0.706	17.93	25.37	112.85	60.60	10.61	C0420-063-1250-S	0.925	23.51	16.38	72.87	50.48	8.83
C0420-063-1500-M	0.420	10.67	0.063	1.60	1.500	38.10	0.988	25.10	0.821	20.85	25.37	112.85	49.60	8.68	C0420-063-1500-S	1.103	28.03	16.38	72.87	41.32	7.23
C0420-063-1750-M	0.420	10.67	0.063	1.60	1.750	44.45	1.145	29.08	0.937	23.80	25.37	112.85	41.90	7.33	C0420-063-1750-S	1.281	32.53	16.38	72.87	34.90	6.11
C0420-063-2000-M	0.420	10.67	0.063	1.60	2.000	50.80	1.302	33.07	1.052	26.72	25.37	112.85	36.30	6.35	C0420-063-2000-S	1.458	37.04	16.38	72.87	30.24	5.29
C0420-063-2250-M	0.420	10.67	0.063	1.60	2.250	57.15	1.459	37.06	1.167	29.64	25.37	112.85	32.10	5.62	C0420-063-2250-S	1.637	41.59	16.38	72.87	26.74	4.68
C0420-063-2500-M	0.420	10.67	0.063	1.60	2.500	63.50	1.616	41.05	1.282	32.56	25.37	112.85	28.70	5.02	C0420-063-2500-S	1.815	46.09	16.38	72.87	23.91	4.18
C0420-067-0750-M	0.420	10.67	0.067	1.70	0.750	19.05	0.542	13.77	0.507	12.88	30.02	133.54	144.30	25.25	C0420-067-0750-S	0.587	14.91	19.57	87.06	120.20	21.04
C0420-067-1000-M	0.420	10.67	0.067	1.70	1.000	25.40	0.708	17.98	0.631	16.03	30.02	133.54	102.70	17.97	C0420-067-1000-S	0.771	19.59	19.57	87.06	85.55	14.97
C0420-067-1250-M	0.420	10.67	0.067	1.70	1.250	31.75	0.873	22.17	0.755	19.18	30.02	133.54	79.70	13.95	C0420-067-1250-S	0.955	24.26	19.57	87.06	66.39	11.62
C0420-067-1500-M	0.420	10.67	0.067	1.70	1.500	38.10	1.039	26.39	0.879	22.33	30.02	133.54	65.10	11.39	C0420-067-1500-S	1.139	28.93	19.57	87.06	54.23	9.49
C0420-067-1750-M	0.420	10.67	0.067	1.70	1.750	44.45	1.204	30.58	1.003	25.48	30.02	133.54	55.00	9.63	C0420-067-1750-S	1.323	33.60	19.57	87.06	45.82	8.02
C0420-067-2000-M	0.420	10.67	0.067	1.70	2.000	50.80	1.370	34.80	1.127	28.63	30.02	133.54	47.60	8.33	C0420-067-2000-S	1.506	38.26	19.57	87.06	39.65	6.94
C0420-067-2250-M	0.420	10.67	0.067	1.70	2.250	57.15	1.536	39.01	1.251	31.78	30.02	133.54	42.00	7.35	C0420-067-2250-S	1.691	42.94	19.57	87.06	34.99	6.12
C0420-067-2500-M	0.420	10.67	0.067	1.70	2.500	63.50	1.701	43.21	1.375	34.93	30.02	133.54	37.60	6.58	C0420-067-2500-S	1.875	47.63	19.57	87.06	31.32	5.48
C0420-072-1000-M	0.420	10.67	0.072	1.83	1.000	25.40	0.738	18.75	0.690	17.53	36.53	162.49	139.20	24.36	C0420-072-1000-S	0.794	20.17	23.88	106.22	115.95	20.29
C0420-072-1250-M	0.420	10.67	0.072	1.83	1.250	31.75	0.911	23.14	0.829	21.06	36.53	162.49	107.70	18.85	C0420-072-1250-S	0.984	24.99	23.88	106.22	89.71	15.70
C0420-072-1500-M	0.420	10.67	0.072	1.83	1.500	38.10	1.084	27.53	0.967	24.56	36.53	162.49	87.90	15.38	C0420-072-1500-S	1.174	29.82	23.88	106.22	73.22	12.81
C0420-072-1750-M	0.420	10.67	0.072	1.83	1.750	44.45	1.258	31.95	1.105	28.07	36.53	162.49	74.20	12.99	C0420-072-1750-S	1.364	34.64	23.88	106.22	61.81	10.82
C0420-072-2000-M	0.420	10.67	0.072	1.83	2.000	50.80	1.431	36.35	1.244	31.60	36.53	162.49	64.20	11.24	C0420-072-2000-S	1.553	39.46	23.88	106.22	53.48	9.36
C0420-072-2250-M	0.420	10.67	0.072	1.83	2.250	57.15	1.604	40.74	1.382	35.10	36.53	162.49	56.60	9.91	C0420-072-2250-S	1.744	44.29	23.88	106.22	47.15	8.25
C0420-072-2500-M	0.420	10.67	0.072	1.83	2.500	63.50	1.778	45.16	1.521	38.63	36.53	162.49	50.60	8.86	C0420-072-2500-S	1.933	49.11	23.88	106.22	42.15	7.38
D11800*	0.425	10.80	0.031	0.80	0.787	20.00	0.272	6.90	0.205	5.20	3.46	15.40	6.86	1.20	D21800*	0.272	6.90	2.88	12.83	5.71	1.00
D11810*	0.425	10.80	0.031	0.80	1.181	30.00	0.386	9.80	0.268	6.80	3.46	15.40	4.34	0.76	D21810*	0.386	9.80	2.88	12.83	3.60	0.63
D11820*	0.425	10.80	0.031	0.80	1.791	45.50	0.563	14.30	0.362	9.20	3.46	15.40	2.80	0.49	D21820*	0.563	14.30	2.88	12.83	2.34	0.41
D11830*	0.425	10.80	0.031	0.80	2.598	66.00	0.783	19.90	0.488	12.40	3.46	15.40	1.89	0.33	D21830*	0.783	19.90	2.88	12.83	1.54	0.27
D11840*	0.425	10.80	0.031	0.80	3.799	96.50	1.122	28.50	0.677	17.20	3.46	15.40	1.31	0.23	D21840*	1.122	28.50	2.88	12.83	1.09	0.19
D12000	0.433	11.00	0.039	1.00	0.689	17.50	0.315	8.00	0.217	5.50	6.15	27.36	16.57	2.90	D22000	0.315	8.00	5.12	22.79	13.83	2.42
D12010	0.433	11.00	0.039	1.00	1.024	26.00	0.441	11.20	0.295	7.50	6.15	27.36	10.57	1.85	D22010	0.441	11.20	5.12	22.79	8.80	1.54
D12020	0.433	11.00	0.039	1.00	1.535	39.00	0.630	16.00	0.413	10.50	6.15	27.36	6.86	1.20	D22020	0.630	16.00	5.12	22.79	5.71	1.00
D12030	0.433	11.00	0.039	1.00	2.205	56.00	0.882	22.40	0.571	14.50	6.15	27.36	4.63	0.81	D22030	0.882	22.40	5.12	22.79	3.83	0.67
D12040	0.433	11.00	0.039	1.00	3.209	81.50	1.260	32.00	0.807	20.50	6.15	27.36	3.14	0.55	D22040	1.260	32.00	5.12	22.79	2.63	0.46
D12850	0.433	11.00	0.087	2.20	0.638	16.20	0.508	12.90	0.476	12.10	75.84	337.35	571.60	100.03	D22850	0.508	12.90	63.17	281.01	476.11	83.32
D12860	0.433	11.00	0.087	2.20	0.906	23.00	0.697	17.70	0.650	16.50	75.84	337.35	363.14	63.55	D22860	0.697	17.70	63.17	281.01	302.51	52.94

FOR INFORMATION ON ALTERNATIVE FINISHES, SEE PAGE 311

Part Numbers with an "*" are squared and not ground. **Part Numbers in bold** represent the newly expanded Associated Spring RAYMOND compression spring offering.

(OD) 0.433 - 0.470

MUSIC WIRE															STAINLESS STEEL					
Catalog #	Outside Diameter (OD)		Wire Diameter (d)		Free Length (L) Approx		Load Length (L_1)		Solid Height (Sh) Approx		Load (P) at L_1		Spring Rate (R)		Catalog #	Load Length (L_1)		Load (P) at L_1		Spring Rate (R)	
	in	mm	in	mm	in	mm	in	mm	in	mm	lb	N	lb/in	N/mm		in	mm	lb	N	lb/in	N/mm
D12870	0.433	11.00	0.087	2.20	1.437	36.50	1.079	27.40	0.996	25.30	75.84	337.35	210.69	36.87	D22870	1.079	27.40	63.17	281.01	175.49	30.71
D12880	0.433	11.00	0.087	2.20	2.236	56.80	1.650	41.90	1.516	38.50	75.84	337.35	128.91	22.56	D22880	1.650	41.90	63.17	281.01	107.37	18.79
C0437-032-0500-M	**0.437**	**11.10**	**0.032**	**0.81**	**0.500**	**12.70**	**0.182**	**4.61**	**0.132**	**3.34**	**3.40**	**15.13**	**10.68**	**1.87**	**C0437-032-0500-S**	**0.182**	**4.61**	**2.83**	**12.60**	**8.90**	**1.56**
C0437-032-0625-M	**0.437**	**11.10**	**0.032**	**0.81**	**0.625**	**15.88**	**0.219**	**5.55**	**0.154**	**3.92**	**3.37**	**15.00**	**8.30**	**1.45**	**C0437-032-0625-S**	**0.219**	**5.55**	**2.81**	**12.50**	**6.91**	**1.21**
C0437-032-0750-M	**0.437**	**11.10**	**0.032**	**0.81**	**0.750**	**19.05**	**0.256**	**6.50**	**0.177**	**4.50**	**3.36**	**14.93**	**6.79**	**1.19**	**C0437-032-0750-S**	**0.256**	**6.50**	**2.80**	**12.43**	**5.66**	**0.99**
C0437-032-0875-M	**0.437**	**11.10**	**0.032**	**0.81**	**0.875**	**22.23**	**0.293**	**7.44**	**0.200**	**5.08**	**3.34**	**14.86**	**5.74**	**1.00**	**C0437-032-0875-S**	**0.293**	**7.44**	**2.78**	**12.38**	**4.78**	**0.84**
C0437-032-1000-M	**0.437**	**11.10**	**0.032**	**0.81**	**1.000**	**25.40**	**0.328**	**8.34**	**0.220**	**5.60**	**3.34**	**14.88**	**4.98**	**0.87**	**C0437-032-1000-S**	**0.328**	**8.34**	**2.79**	**12.39**	**4.15**	**0.73**
C0437-032-1250-M	**0.437**	**11.10**	**0.032**	**0.81**	**1.250**	**31.75**	**0.399**	**10.13**	**0.261**	**6.63**	**3.34**	**14.88**	**3.93**	**0.69**	**C0437-032-1250-S**	**0.399**	**10.13**	**2.79**	**12.39**	**3.27**	**0.57**
C0437-032-1500-M	**0.437**	**11.10**	**0.032**	**0.81**	**1.500**	**38.10**	**0.470**	**11.94**	**0.303**	**7.68**	**3.34**	**14.85**	**3.24**	**0.57**	**C0437-032-1500-S**	**0.470**	**11.94**	**2.78**	**12.37**	**2.70**	**0.47**
C0437-032-1750-M	**0.437**	**11.10**	**0.032**	**0.81**	**1.750**	**44.45**	**0.541**	**13.73**	**0.343**	**8.72**	**3.34**	**14.85**	**2.76**	**0.48**	**C0437-032-1750-S**	**0.541**	**13.73**	**2.78**	**12.37**	**2.30**	**0.40**
C0437-032-2000-M	**0.437**	**11.10**	**0.032**	**0.81**	**2.000**	**50.80**	**0.610**	**15.51**	**0.384**	**9.74**	**3.35**	**14.90**	**2.41**	**0.42**	**C0437-032-2000-S**	**0.610**	**15.51**	**2.79**	**12.41**	**2.01**	**0.35**
C0437-032-2125-M	**0.437**	**11.10**	**0.032**	**0.81**	**2.125**	**53.98**	**0.646**	**16.41**	**0.405**	**10.28**	**3.34**	**14.87**	**2.26**	**0.40**	**C0437-032-2125-S**	**0.646**	**16.41**	**2.78**	**12.38**	**1.88**	**0.33**
C0437-041-0500-M	**0.437**	**11.10**	**0.041**	**1.04**	**0.500**	**12.70**	**0.228**	**5.79**	**0.189**	**4.80**	**6.97**	**31.02**	**25.64**	**4.49**	**C0437-041-0500-S**	**0.233**	**5.93**	**5.70**	**25.34**	**21.36**	**3.74**
C0437-041-0625-M	**0.437**	**11.10**	**0.041**	**1.04**	**0.625**	**15.88**	**0.276**	**7.02**	**0.225**	**5.73**	**6.88**	**30.62**	**19.74**	**3.45**	**C0437-041-0625-S**	**0.279**	**7.08**	**5.70**	**25.34**	**16.44**	**2.88**
C0437-041-0750-M	**0.437**	**11.10**	**0.041**	**1.04**	**0.750**	**19.05**	**0.324**	**8.24**	**0.262**	**6.65**	**6.83**	**30.37**	**16.04**	**2.81**	**C0437-041-0750-S**	**0.324**	**8.24**	**5.69**	**25.30**	**13.36**	**2.34**
C0437-041-0875-M	**0.437**	**11.10**	**0.041**	**1.04**	**0.875**	**22.23**	**0.370**	**9.39**	**0.295**	**7.48**	**6.83**	**30.37**	**13.51**	**2.36**	**C0437-041-0875-S**	**0.370**	**9.39**	**5.69**	**25.30**	**11.25**	**1.97**
C0437-041-1000-M	**0.437**	**11.10**	**0.041**	**1.04**	**1.000**	**25.40**	**0.415**	**10.54**	**0.327**	**8.32**	**6.83**	**30.37**	**11.67**	**2.04**	**C0437-041-1000-S**	**0.415**	**10.54**	**5.69**	**25.29**	**9.72**	**1.70**
C0437-041-1250-M	**0.437**	**11.10**	**0.041**	**1.04**	**1.250**	**31.75**	**0.563**	**14.30**	**0.344**	**8.75**	**7.49**	**33.32**	**10.90**	**1.91**	**C0437-041-1250-S**	**0.623**	**15.81**	**5.70**	**25.34**	**9.08**	**1.59**
C0437-041-1500-M	**0.437**	**11.10**	**0.041**	**1.04**	**1.500**	**38.10**	**0.682**	**17.33**	**0.394**	**10.00**	**7.49**	**33.32**	**9.16**	**1.60**	**C0437-041-1500-S**	**0.753**	**19.14**	**5.70**	**25.34**	**7.63**	**1.34**
C0437-041-1750-M	**0.437**	**11.10**	**0.041**	**1.04**	**1.750**	**44.45**	**0.757**	**19.22**	**0.460**	**11.67**	**7.49**	**33.32**	**7.54**	**1.32**	**C0437-041-1750-S**	**0.843**	**21.41**	**5.70**	**25.34**	**6.28**	**1.10**
C0437-041-2000-M	**0.437**	**11.10**	**0.041**	**1.04**	**2.000**	**50.80**	**0.831**	**21.12**	**0.525**	**13.35**	**7.49**	**33.32**	**6.41**	**1.12**	**C0437-041-2000-S**	**0.933**	**23.70**	**5.70**	**25.34**	**5.34**	**0.93**
C0437-041-2125-M	**0.437**	**11.10**	**0.041**	**1.04**	**2.125**	**53.98**	**0.797**	**20.24**	**0.591**	**15.01**	**7.41**	**32.96**	**5.58**	**0.98**	**C0437-041-2125-S**	**0.899**	**22.85**	**5.70**	**25.34**	**4.65**	**0.81**
C0437-054-0500-M	**0.437**	**11.10**	**0.054**	**1.37**	**0.500**	**12.70**	**0.294**	**7.48**	**0.271**	**6.88**	**15.42**	**68.61**	**75.00**	**13.13**	**C0437-054-0500-S**	**0.304**	**7.73**	**12.22**	**54.38**	**62.48**	**10.93**
C0437-054-0625-M	**0.437**	**11.10**	**0.054**	**1.37**	**0.625**	**15.88**	**0.360**	**9.15**	**0.329**	**8.36**	**15.06**	**66.97**	**56.87**	**9.95**	**C0437-054-0625-S**	**0.367**	**9.32**	**12.22**	**54.38**	**47.37**	**8.29**
C0437-054-0750-M	**0.437**	**11.10**	**0.054**	**1.37**	**0.750**	**19.05**	**0.422**	**10.73**	**0.383**	**9.72**	**15.01**	**66.75**	**45.80**	**8.02**	**C0437-054-0750-S**	**0.430**	**10.91**	**12.22**	**54.38**	**38.15**	**6.68**
C0437-054-0875-M	**0.437**	**11.10**	**0.054**	**1.37**	**0.875**	**22.23**	**0.484**	**12.28**	**0.435**	**11.05**	**15.00**	**66.74**	**38.33**	**6.71**	**C0437-054-0875-S**	**0.492**	**12.50**	**12.22**	**54.38**	**31.93**	**5.59**
C0437-054-1000-M	**0.437**	**11.10**	**0.054**	**1.37**	**1.000**	**25.40**	**0.545**	**13.84**	**0.488**	**12.39**	**15.00**	**66.74**	**32.96**	**5.77**	**C0437-054-1000-S**	**0.555**	**14.09**	**12.22**	**54.38**	**27.46**	**4.80**
C0437-054-1250-M	**0.437**	**11.10**	**0.054**	**1.37**	**1.250**	**31.75**	**0.667**	**16.94**	**0.592**	**15.05**	**15.01**	**66.76**	**25.75**	**4.51**	**C0437-054-1250-S**	**0.680**	**17.27**	**12.22**	**54.38**	**21.45**	**3.75**
C0437-054-1500-M	**0.437**	**11.10**	**0.054**	**1.37**	**1.500**	**38.10**	**0.790**	**20.06**	**0.697**	**17.72**	**15.00**	**66.74**	**21.12**	**3.70**	**C0437-054-1500-S**	**0.805**	**20.45**	**12.22**	**54.38**	**17.59**	**3.08**
C0437-054-1750-M	**0.437**	**11.10**	**0.054**	**1.37**	**1.750**	**44.45**	**0.912**	**23.16**	**0.802**	**20.38**	**15.01**	**66.77**	**17.91**	**3.13**	**C0437-054-1750-S**	**0.931**	**23.64**	**12.22**	**54.38**	**14.92**	**2.61**
C0437-054-2000-M	**0.437**	**11.10**	**0.054**	**1.37**	**2.000**	**50.80**	**1.034**	**26.27**	**0.907**	**23.04**	**15.01**	**66.75**	**15.54**	**2.72**	**C0437-054-2000-S**	**1.056**	**26.81**	**12.22**	**54.38**	**12.95**	**2.27**
C0437-054-2250-M	**0.437**	**11.10**	**0.054**	**1.37**	**2.250**	**57.15**	**1.157**	**29.38**	**1.012**	**25.70**	**15.01**	**66.78**	**13.73**	**2.40**	**C0437-054-2250-S**	**1.181**	**30.00**	**12.22**	**54.38**	**11.44**	**2.00**
C0437-054-2500-M	**0.437**	**11.10**	**0.054**	**1.37**	**2.500**	**63.50**	**1.279**	**32.50**	**1.117**	**28.38**	**15.00**	**66.73**	**12.29**	**2.15**	**C0437-054-2500-S**	**1.306**	**33.17**	**12.22**	**54.38**	**10.24**	**1.79**
D12200	0.443	11.25	0.049	1.25	0.787	20.00	0.303	7.70	0.271	6.88	19.20	85.42	40.51	7.09	D22200	0.303	7.70	16.00	71.15	33.77	5.91
D12210	0.443	11.25	0.049	1.25	1.161	29.50	0.425	10.80	0.369	9.38	19.20	85.42	25.77	4.51	D22210	0.425	10.80	16.00	71.15	21.49	3.76
D12220	0.443	11.25	0.049	1.25	1.752	44.50	0.598	15.20	0.517	13.13	19.20	85.42	16.69	2.92	D22220	0.598	15.20	16.00	71.15	13.89	2.43
D12230	0.443	11.25	0.049	1.25	2.520	64.00	0.831	21.10	0.714	18.13	19.20	85.42	11.37	1.99	D22230	0.831	21.10	16.00	71.15	9.49	1.66
D12240	0.443	11.25	0.049	1.25	3.681	93.50	1.181	30.00	1.009	25.63	19.20	85.42	7.66	1.34	D22240	1.181	30.00	16.00	71.15	6.40	1.12
C0455-039-0500-M	0.455	11.56	0.039	0.99	0.500	12.70	0.257	6.53	0.187	4.75	6.21	27.62	25.60	4.48	C0455-039-0500-S	0.309	7.85	4.07	18.10	21.33	3.73
C0455-039-0620-M	0.455	11.56	0.039	0.99	0.620	15.75	0.308	7.82	0.207	5.26	6.21	27.62	19.90	3.48	C0455-039-0620-S	0.375	9.51	4.07	18.10	16.58	2.90
C0455-039-0750-M	0.455	11.56	0.039	0.99	0.750	19.05	0.364	9.25	0.229	5.82	6.21	27.62	16.10	2.82	C0455-039-0750-S	0.447	11.34	4.07	18.10	13.41	2.35
C0455-039-0880-M	0.455	11.56	0.039	0.99	0.880	22.35	0.419	10.64	0.251	6.38	6.21	27.62	13.50	2.36	C0455-039-0880-S	0.518	13.16	4.07	18.10	11.25	1.97
C0455-039-1000-M	0.455	11.56	0.039	0.99	1.000	25.40	0.470	11.94	0.271	6.88	6.21	27.62	11.70	2.05	C0455-039-1000-S	0.582	14.79	4.07	18.10	9.75	1.71
C0455-039-1250-M	0.455	11.56	0.039	0.99	1.250	31.75	0.576	14.63	0.312	7.92	6.21	27.62	9.20	1.61	C0455-039-1250-S	0.719	18.26	4.07	18.10	7.66	1.34
C0455-039-1500-M	0.455	11.56	0.039	0.99	1.500	38.10	0.682	17.32	0.354	8.99	6.21	27.62	7.60	1.33	C0455-039-1500-S	0.857	21.77	4.07	18.10	6.33	1.11
C0455-039-1750-M	0.455	11.56	0.039	0.99	1.750	44.45	0.789	20.04	0.396	10.06	6.21	27.62	6.50	1.14	C0455-039-1750-S	0.998	25.36	4.07	18.10	5.42	0.95
C0455-046-0500-M	0.455	11.56	0.046	1.17	0.500	12.70	0.284	7.21	0.233	5.92	9.86	43.86	45.60	7.98	C0455-046-0500-S	0.331	8.40	6.43	28.60	37.99	6.65
C0455-046-0620-M	0.455	11.56	0.046	1.17	0.620	15.75	0.340	8.64	0.261	6.63	9.86	43.86	35.30	6.18	C0455-046-0620-S	0.401	10.19	6.43	28.60	29.41	5.15
C0455-046-0750-M	0.455	11.56	0.046	1.17	0.750	19.05	0.401	10.19	0.291	7.39	9.86	43.86	28.30	4.95	C0455-046-0750-S	0.477	12.12	6.43	28.60	23.57	4.13
C0455-046-0880-M	0.455	11.56	0.046	1.17	0.880	22.35	0.463	11.76	0.321	8.15	9.86	43.86	23.60	4.13	C0455-046-0880-S	0.553	14.04	6.43	28.60	19.66	3.44
C0455-046-1000-M	0.455	11.56	0.046	1.17	1.000	25.40	0.519	13.18	0.349	8.86	9.86	43.86	20.50	3.59	C0455-046-1000-S	0.623	15.84	6.43	28.60	17.08	2.99
C0455-046-1250-M	0.455	11.56	0.046	1.17	1.250	31.75	0.637	16.18	0.407	10.34	9.86	43.86	16.10	2.82	C0455-046-1250-S	0.771	19.57	6.43	28.60	13.41	2.35
C0455-046-1500-M	0.455	11.56	0.046	1.17	1.500	38.10	0.754	19.15	0.465	11.81	9.86	43.86	13.20	2.31	C0455-046-1500-S	0.915	23.25	6.43	28.60	11.00	1.92
C0455-046-1750-M	0.455	11.56	0.046	1.17	1.750	44.45	0.872	22.15	0.523	13.28	9.86	43.86	11.20	1.96	C0455-046-1750-S	1.061	26.94	6.43	28.60	9.33	1.63
D12400	0.457	11.60	0.063	1.60	0.728	18.50	0.370	9.40	0.346	8.80	38.14	169.66	109.26	19.12	D22400	0.370	9.40	31.77	141.33	91.03	15.93
D12410	0.457	11.60	0.063	1.60	1.063	27.00	0.520	13.20	0.472	12.00	38.14	169.66	69.49	12.16	D22410	0.520	13.20	31.77	141.33	57.89	10.13
D12420	0.457	11.60	0.063	1.60	1.594	40.50	0.744	18.90	0.661	16.80	38.14	169.66	44.97	7.87	D22420	0.744	18.90	31.77	141.33	37.49	6.56
D12430	0.457	11.60	0.063	1.60	2.303	58.50	1.043	26.50	0.913	23.20	38.14	169.66	30.46	5.33	D22430	1.043	26.50	31.77	141.33	25.37	4.44
D12440	0.457	11.60	0.063	1.60	3.346	85.00	1.492	37.90	1.291	32.80	38.14	169.66	20.63	3.61	D22440	1.492	37.90	31.77	141.33	17.20	3.01
C0470-038-0938-M	**0.470**	**11.94**	**0.038**	**0.97**	**0.938**	**23.81**	**0.338**	**8.59**	**0.244**	**6.20**	**5.40**	**24.04**	**9.02**	**1.58**	**C0470-038-0938-S**	**0.390**	**9.91**	**4.29**	**19.10**	**7.84**	**1.37**
C0470-038-1000-M	**0.470**	**11.94**	**0.038**	**0.97**	**1.000**	**25.40**	**0.357**	**9.08**	**0.256**	**6.51**	**5.40**	**24.04**	**8.41**	**1.47**	**C0470-038-1000-S**	**0.413**	**10.49**	**4.29**	**19.10**	**7.31**	**1.28**
C0470-038-1125-M	**0.470**	**11.94**	**0.038**	**0.97**	**1.125**	**28.58**	**0.395**	**10.04**	**0.280**	**7.11**	**5.40**	**24.04**	**7.41**	**1.30**	**C0470-038-1125-S**	**0.458**	**11.64**	**4.29**	**19.10**	**6.44**	**1.13**
C0470-038-1250-M	**0.470**	**11.94**	**0.038**	**0.97**	**1.250**	**31.75**	**0.434**	**11.01**	**0.304**	**7.72**	**5.40**	**24.04**	**6.62**	**1.16**	**C0470-038-1250-S**	**0.504**	**12.80**	**4.29**	**19.10**	**5.76**	**1.01**
C0470-038-1375-M	**0.470**	**11.94**	**0.038**	**0.97**	**1.375**	**34.93**	**0.472**	**11.98**	**0.328**	**8.33**	**5.40**	**24.04**	**5.98**	**1.05**	**C0470-038-1375-S**	**0.550**	**13.96**	**4.29**	**19.10**	**5.20**	**0.91**

Part Numbers with an "*" are squared and not ground. **Part Numbers in bold** represent the newly expanded Associated Spring RAYMOND compression spring offering.

MUSIC WIRE															STAINLESS STEEL						
Catalog #	Outside Diameter (OD)		Wire Diameter (d)		Free Length (L) Approx		Load Length (L_1)		Solid Height (Sh) Approx		Load (P) at L_1		Spring Rate (R)		Catalog #	Load Length (L_1)		Load (P) at L_1		Spring Rate (R)	
	in	mm	in	mm	in	mm	in	mm	in	mm	lb	N	lb/in	N/mm		in	mm	lb	N	lb/in	N/mm
C0470-038-1500-M	0.470	11.94	0.038	0.97	1.500	38.10	0.510	12.95	0.352	8.93	5.40	24.04	5.46	0.95	**C0470-038-1500-S**	0.595	15.11	4.29	19.10	4.75	0.83
C0470-038-1625-M	0.470	11.94	0.038	0.97	1.625	41.28	0.548	13.91	0.376	9.54	5.40	24.04	5.02	0.88	**C0470-038-1625-S**	0.641	16.27	4.29	19.10	4.36	0.76
C0470-038-1750-M	0.470	11.94	0.038	0.97	1.750	44.45	0.586	14.88	0.399	10.14	5.40	24.04	4.64	0.81	**C0470-038-1750-S**	0.686	17.43	4.29	19.10	4.04	0.71
C0470-038-1875-M	0.470	11.94	0.038	0.97	1.875	47.63	0.624	15.85	0.423	10.75	5.40	24.04	4.32	0.76	**C0470-038-1875-S**	0.732	18.59	4.29	19.10	3.76	0.66
C0470-038-2000-M	0.470	11.94	0.038	0.97	2.000	50.80	0.662	16.81	0.447	11.36	5.40	24.04	4.04	0.71	**C0470-038-2000-S**	0.777	19.74	4.29	19.10	3.51	0.61
C0470-038-2125-M	0.470	11.94	0.038	0.97	2.125	53.98	0.700	17.78	0.471	11.96	5.40	24.04	3.79	0.66	**C0470-038-2125-S**	0.823	20.90	4.29	19.10	3.30	0.58
C0470-038-2250-M	0.470	11.94	0.038	0.97	2.250	57.15	0.738	18.75	0.495	12.57	5.40	24.04	3.57	0.63	**C0470-038-2250-S**	0.868	22.06	4.29	19.10	3.11	0.54
C0470-038-2375-M	0.470	11.94	0.038	0.97	2.375	60.33	0.776	19.71	0.519	13.17	5.40	24.04	3.38	0.59	**C0470-038-2375-S**	0.914	23.22	4.29	19.10	2.94	0.51
C0470-038-2500-M	0.470	11.94	0.038	0.97	2.500	63.50	0.814	20.68	0.543	13.78	5.40	24.04	3.21	0.56	**C0470-038-2500-S**	0.960	24.37	4.29	19.10	2.79	0.49
C0470-038-2625-M	0.470	11.94	0.038	0.97	2.625	66.68	0.852	21.65	0.566	14.39	5.40	24.04	3.05	0.53	**C0470-038-2625-S**	1.005	25.53	4.29	19.10	2.65	0.46
C0470-038-2750-M	0.470	11.94	0.038	0.97	2.750	69.85	0.890	22.61	0.590	14.99	5.40	24.04	2.91	0.51	**C0470-038-2750-S**	1.051	26.69	4.29	19.10	2.53	0.44
C0470-038-2875-M	0.470	11.94	0.038	0.97	2.875	73.03	0.928	23.58	0.614	15.60	5.40	24.04	2.78	0.49	**C0470-038-2875-S**	1.096	27.85	4.29	19.10	2.41	0.42
C0470-038-3000-M	0.470	11.94	0.038	0.97	3.000	76.20	0.966	24.55	0.638	16.20	5.40	24.04	2.66	0.47	**C0470-038-3000-S**	1.142	29.00	4.29	19.10	2.31	0.40
C0470-038-3250-M	0.470	11.94	0.038	0.97	3.250	82.55	1.043	26.48	0.686	17.42	5.40	24.04	2.45	0.43	**C0470-038-3250-S**	1.233	31.32	4.29	19.10	2.13	0.37
C0470-038-3500-M	0.470	11.94	0.038	0.97	3.500	88.90	1.119	28.42	0.733	18.63	5.40	24.04	2.27	0.40	**C0470-038-3500-S**	1.324	33.63	4.29	19.10	1.97	0.35
C0470-038-3750-M	0.470	11.94	0.038	0.97	3.750	95.25	1.195	30.35	0.781	19.84	5.40	24.04	2.12	0.37	**C0470-038-3750-S**	1.415	35.95	4.29	19.10	1.84	0.32
C0470-038-4000-M	0.470	11.94	0.038	0.97	4.000	101.60	1.271	32.28	0.829	21.05	5.40	24.04	1.98	0.35	**C0470-038-4000-S**	1.506	38.26	4.29	19.10	1.72	0.30
C0470-038-4250-M	0.470	11.94	0.038	0.97	4.250	107.95	1.347	34.22	0.877	22.27	5.40	24.04	1.86	0.33	**C0470-038-4250-S**	1.597	40.58	4.29	19.10	1.62	0.28
C0470-038-4500-M	0.470	11.94	0.038	0.97	4.500	114.30	1.423	36.15	0.924	23.48	5.40	24.04	1.76	0.31	**C0470-038-4500-S**	1.689	42.89	4.29	19.10	1.53	0.27
C0470-038-4750-M	0.470	11.94	0.038	0.97	4.750	120.65	1.499	38.08	0.972	24.69	5.40	24.04	1.66	0.29	**C0470-038-4750-S**	1.780	45.21	4.29	19.10	1.45	0.25
C0470-038-5000-M	0.470	11.94	0.038	0.97	5.000	127.00	1.576	40.02	1.020	25.90	5.40	24.04	1.58	0.28	**C0470-038-5000-S**	1.871	47.52	4.29	19.10	1.37	0.24
C0470-038-5250-M	0.470	11.94	0.038	0.97	5.250	133.35	1.652	41.95	1.068	27.11	5.40	24.04	1.50	0.26	**C0470-038-5250-S**	1.962	49.83	4.29	19.10	1.31	0.23
C0470-038-5500-M	0.470	11.94	0.038	0.97	5.500	139.70	1.728	43.89	1.115	28.33	5.40	24.04	1.43	0.25	**C0470-038-5500-S**	2.053	52.15	4.29	19.10	1.25	0.22
C0470-038-5750-M	0.470	11.94	0.038	0.97	5.750	146.05	1.804	45.82	1.163	29.54	5.40	24.04	1.37	0.24	**C0470-038-5750-S**	2.144	54.46	4.29	19.10	1.19	0.21
C0470-038-6000-M	0.470	11.94	0.038	0.97	6.000	152.40	1.880	47.75	1.211	30.75	5.40	24.04	1.31	0.23	**C0470-038-6000-S**	2.235	56.78	4.29	19.10	1.14	0.20
C0470-038-6250-M	0.470	11.94	0.038	0.97	6.250	158.75	1.956	49.69	1.258	31.96	5.40	24.04	1.26	0.22	**C0470-038-6250-S**	2.327	59.09	4.29	19.10	1.09	0.19
C0470-038-6500-M	0.470	11.94	0.038	0.97	6.500	165.10	2.032	51.62	1.306	33.18	5.40	24.04	1.21	0.21	**C0470-038-6500-S**	2.418	61.41	4.29	19.10	1.05	0.18
C0470-038-6750-M	0.470	11.94	0.038	0.97	6.750	171.45	2.108	53.56	1.354	34.39	5.40	24.04	1.16	0.20	**C0470-038-6750-S**	2.509	63.72	4.29	19.10	1.01	0.18
C0470-038-7000-M	0.470	11.94	0.038	0.97	7.000	177.80	2.185	55.49	1.402	35.60	5.40	24.04	1.12	0.20	**C0470-038-7000-S**	2.600	66.04	4.29	19.10	0.98	0.17
C0470-038-7500-M	0.470	11.94	0.038	0.97	7.500	190.50	2.337	59.36	1.497	38.02	5.40	24.04	1.05	0.18	**C0470-038-7500-S**	2.782	70.67	4.29	19.10	0.91	0.16
C0470-038-8000-M	0.470	11.94	0.038	0.97	8.000	203.20	2.489	63.22	1.592	40.45	5.40	24.04	0.98	0.17	**C0470-038-8000-S**	2.964	75.30	4.29	19.10	0.85	0.15
C0470-038-8500-M	0.470	11.94	0.038	0.97	8.500	215.90	2.641	67.09	1.688	42.87	5.40	24.04	0.92	0.16	**C0470-038-8500-S**	3.147	79.93	4.29	19.10	0.80	0.14
C0470-040-0875-M	0.470	11.94	0.040	1.02	0.875	22.23	0.335	8.52	0.252	6.41	6.24	27.75	11.56	2.02	**C0470-040-0875-S**	0.382	9.69	4.96	22.06	10.05	1.76
C0470-040-0938-M	0.470	11.94	0.040	1.02	0.938	23.81	0.355	9.03	0.265	6.74	6.24	27.75	10.72	1.88	**C0470-040-0938-S**	0.405	10.30	4.96	22.06	9.32	1.63
C0470-040-1000-M	0.470	11.94	0.040	1.02	1.000	25.40	0.376	9.54	0.279	7.08	6.24	27.75	9.99	1.75	**C0470-040-1000-S**	0.429	10.90	4.96	22.06	8.69	1.52
C0470-040-1125-M	0.470	11.94	0.040	1.02	1.125	28.58	0.416	10.56	0.305	7.75	6.24	27.75	8.79	1.54	**C0470-040-1125-S**	0.476	12.10	4.96	22.06	7.65	1.34
C0470-040-1250-M	0.470	11.94	0.040	1.02	1.250	31.75	0.456	11.58	0.332	8.42	6.24	27.75	7.85	1.37	**C0470-040-1250-S**	0.524	13.31	4.96	22.06	6.83	1.20
C0470-040-1375-M	0.470	11.94	0.040	1.02	1.375	34.93	0.496	12.60	0.358	9.09	6.24	27.75	7.10	1.24	**C0470-040-1375-S**	0.571	14.51	4.96	22.06	6.17	1.08
C0470-040-1500-M	0.470	11.94	0.040	1.02	1.500	38.10	0.536	13.62	0.384	9.76	6.24	27.75	6.47	1.13	**C0470-040-1500-S**	0.619	15.72	4.96	22.06	5.63	0.98
C0470-040-1625-M	0.470	11.94	0.040	1.02	1.625	41.28	0.576	14.64	0.411	10.44	6.24	27.75	5.95	1.04	**C0470-040-1625-S**	0.666	16.92	4.96	22.06	5.17	0.91
C0470-040-1750-M	0.470	11.94	0.040	1.02	1.750	44.45	0.616	15.66	0.437	11.11	6.24	27.75	5.50	0.96	**C0470-040-1750-S**	0.714	18.12	4.96	22.06	4.79	0.84
C0470-040-1875-M	0.470	11.94	0.040	1.02	1.875	47.63	0.657	16.68	0.464	11.78	6.24	27.75	5.12	0.90	**C0470-040-1875-S**	0.761	19.33	4.96	22.06	4.45	0.78
C0470-040-2000-M	0.470	11.94	0.040	1.02	2.000	50.80	0.697	17.70	0.490	12.45	6.24	27.75	4.79	0.84	**C0470-040-2000-S**	0.808	20.53	4.96	22.06	4.16	0.73
C0470-040-2125-M	0.470	11.94	0.040	1.02	2.125	53.98	0.737	18.72	0.517	13.12	6.24	27.75	4.49	0.79	**C0470-040-2125-S**	0.856	21.74	4.96	22.06	3.91	0.68
C0470-040-2250-M	0.470	11.94	0.040	1.02	2.250	57.15	0.777	19.74	0.543	13.79	6.24	27.75	4.24	0.74	**C0470-040-2250-S**	0.903	22.94	4.96	22.06	3.68	0.64
C0470-040-2375-M	0.470	11.94	0.040	1.02	2.375	60.33	0.817	20.76	0.569	14.46	6.24	27.75	4.00	0.70	**C0470-040-2375-S**	0.951	24.15	4.96	22.06	3.48	0.61
C0470-040-2500-M	0.470	11.94	0.040	1.02	2.500	63.50	0.857	21.78	0.596	15.14	6.24	27.75	3.80	0.66	**C0470-040-2500-S**	0.998	25.35	4.96	22.06	3.30	0.58
C0470-040-2625-M	0.470	11.94	0.040	1.02	2.625	66.68	0.898	22.80	0.622	15.81	6.24	27.75	3.61	0.63	**C0470-040-2625-S**	1.046	26.56	4.96	22.06	3.14	0.55
C0470-040-2750-M	0.470	11.94	0.040	1.02	2.750	69.85	0.938	23.82	0.649	16.48	6.24	27.75	3.44	0.60	**C0470-040-2750-S**	1.093	27.76	4.96	22.06	2.99	0.52
C0470-040-2875-M	0.470	11.94	0.040	1.02	2.875	73.03	0.978	24.84	0.675	17.15	6.24	27.75	3.29	0.58	**C0470-040-2875-S**	1.140	28.97	4.96	22.06	2.86	0.50
C0470-040-3000-M	0.470	11.94	0.040	1.02	3.000	76.20	1.018	25.86	0.702	17.82	6.24	27.75	3.15	0.55	**C0470-040-3000-S**	1.188	30.17	4.96	22.06	2.74	0.48
C0470-040-3250-M	0.470	11.94	0.040	1.02	3.250	82.55	1.098	27.90	0.755	19.17	6.24	27.75	2.90	0.51	**C0470-040-3250-S**	1.283	32.58	4.96	22.06	2.52	0.44
C0470-040-3500-M	0.470	11.94	0.040	1.02	3.500	88.90	1.179	29.94	0.807	20.51	6.24	27.75	2.69	0.47	**C0470-040-3500-S**	1.377	34.99	4.96	22.06	2.34	0.41
C0470-040-3750-M	0.470	11.94	0.040	1.02	3.750	95.25	1.259	31.98	0.860	21.85	6.24	27.75	2.50	0.44	**C0470-040-3750-S**	1.472	37.40	4.96	22.06	2.18	0.38
C0470-040-4000-M	0.470	11.94	0.040	1.02	4.000	101.60	1.339	34.02	0.913	23.20	6.24	27.75	2.34	0.41	**C0470-040-4000-S**	1.567	39.81	4.96	22.06	2.04	0.36
C0470-040-4250-M	0.470	11.94	0.040	1.02	4.250	107.95	1.420	36.06	0.966	24.54	6.24	27.75	2.20	0.39	**C0470-040-4250-S**	1.662	42.21	4.96	22.06	1.92	0.34
C0470-040-4500-M	0.470	11.94	0.040	1.02	4.500	114.30	1.500	38.10	1.019	25.88	6.24	27.75	2.08	0.36	**C0470-040-4500-S**	1.757	44.62	4.96	22.06	1.81	0.32
C0470-040-4750-M	0.470	11.94	0.040	1.02	4.750	120.65	1.580	40.14	1.072	27.23	6.24	27.75	1.97	0.34	**C0470-040-4750-S**	1.852	47.03	4.96	22.06	1.71	0.30
C0470-040-5000-M	0.470	11.94	0.040	1.02	5.000	127.00	1.661	42.18	1.125	28.57	6.24	27.75	1.87	0.33	**C0470-040-5000-S**	1.947	49.44	4.96	22.06	1.62	0.28
C0470-040-5250-M	0.470	11.94	0.040	1.02	5.250	133.35	1.741	44.22	1.178	29.91	6.24	27.75	1.78	0.31	**C0470-040-5250-S**	2.041	51.85	4.96	22.06	1.55	0.27
C0470-040-5500-M	0.470	11.94	0.040	1.02	5.500	139.70	1.821	46.26	1.231	31.26	6.24	27.75	1.70	0.30	**C0470-040-5500-S**	2.136	54.26	4.96	22.06	1.47	0.26
C0470-040-5750-M	0.470	11.94	0.040	1.02	5.750	146.05	1.901	48.30	1.283	32.60	6.24	27.75	1.62	0.28	**C0470-040-5750-S**	2.231	56.67	4.96	22.06	1.41	0.25
C0470-040-6000-M	0.470	11.94	0.040	1.02	6.000	152.40	1.982	50.34	1.336	33.94	6.24	27.75	1.55	0.27	**C0470-040-6000-S**	2.326	59.08	4.96	22.06	1.35	0.24
C0470-040-6250-M	0.470	11.94	0.040	1.02	6.250	158.75	2.062	52.38	1.389	35.29	6.24	27.75	1.49	0.26	**C0470-040-6250-S**	2.421	61.49	4.96	22.06	1.30	0.23

FOR INFORMATION ON ALTERNATIVE FINISHES, SEE PAGE 311

Part Numbers with an "*" are squared and not ground. **Part Numbers in bold** represent the newly expanded Associated Spring RAYMOND compression spring offering.

(OD) 0.470 - 0.470

MUSIC WIRE															STAINLESS STEEL					
Catalog #	Outside Diameter (OD)		Wire Diameter (d)		Free Length (L) Approx		Load Length (L_1)		Solid Height (Sh) Approx		Load (P) at L_1		Spring Rate (R)		Catalog #	Load Length (L_1)		Load (P) at L_1		Spring Rate (R)	
	in	mm	in	mm	in	mm	in	mm	in	mm	lb	N	lb/in	N/mm		in	mm	lb	N	lb/in	N/mm
C0470-040-6500-M	**0.470**	**11.94**	**0.040**	**1.02**	**6.500**	**165.10**	**2.142**	**54.42**	**1.442**	**36.63**	**6.24**	**27.75**	**1.43**	**0.25**	**C0470-040-6500-S**	**2.516**	**63.90**	**4.96**	**22.06**	**1.25**	**0.22**
C0470-040-6750-M	**0.470**	**11.94**	**0.040**	**1.02**	**6.750**	**171.45**	**2.223**	**56.46**	**1.495**	**37.97**	**6.24**	**27.75**	**1.38**	**0.24**	**C0470-040-6750-S**	**2.610**	**66.31**	**4.96**	**22.06**	**1.20**	**0.21**
C0470-040-7000-M	**0.470**	**11.94**	**0.040**	**1.02**	**7.000**	**177.80**	**2.303**	**58.50**	**1.548**	**39.32**	**6.24**	**27.75**	**1.33**	**0.23**	**C0470-040-7000-S**	**2.705**	**68.71**	**4.96**	**22.06**	**1.16**	**0.20**
C0470-040-7500-M	**0.470**	**11.94**	**0.040**	**1.02**	**7.500**	**190.50**	**2.464**	**62.58**	**1.654**	**42.00**	**6.24**	**27.75**	**1.24**	**0.22**	**C0470-040-7500-S**	**2.895**	**73.53**	**4.96**	**22.06**	**1.08**	**0.19**
C0470-040-8000-M	**0.470**	**11.94**	**0.040**	**1.02**	**8.000**	**203.20**	**2.624**	**66.66**	**1.759**	**44.69**	**6.24**	**27.75**	**1.16**	**0.20**	**C0470-040-8000-S**	**3.085**	**78.35**	**4.96**	**22.06**	**1.01**	**0.18**
C0470-040-8500-M	**0.470**	**11.94**	**0.040**	**1.02**	**8.500**	**215.90**	**2.785**	**70.74**	**1.865**	**47.38**	**6.24**	**27.75**	**1.09**	**0.19**	**C0470-040-8500-S**	**3.274**	**83.17**	**4.96**	**22.06**	**0.95**	**0.17**
C0470-042-0875-M	**0.470**	**11.94**	**0.042**	**1.07**	**0.875**	**22.23**	**0.352**	**8.93**	**0.272**	**6.92**	**7.15**	**31.79**	**13.66**	**2.39**	**C0470-042-0875-S**	**0.396**	**10.07**	**5.69**	**25.29**	**11.88**	**2.08**
C0470-042-0938-M	**0.470**	**11.94**	**0.042**	**1.07**	**0.938**	**23.81**	**0.373**	**9.47**	**0.287**	**7.29**	**7.15**	**31.79**	**12.66**	**2.22**	**C0470-042-0938-S**	**0.421**	**10.69**	**5.69**	**25.29**	**11.01**	**1.93**
C0470-042-1000-M	**0.470**	**11.94**	**0.042**	**1.07**	**1.000**	**25.40**	**0.394**	**10.01**	**0.301**	**7.66**	**7.15**	**31.79**	**11.80**	**2.06**	**C0470-042-1000-S**	**0.446**	**11.32**	**5.69**	**25.29**	**10.26**	**1.80**
C0470-042-1125-M	**0.470**	**11.94**	**0.042**	**1.07**	**1.125**	**28.58**	**0.436**	**11.08**	**0.331**	**8.40**	**7.15**	**31.79**	**10.38**	**1.82**	**C0470-042-1125-S**	**0.495**	**12.57**	**5.69**	**25.29**	**9.03**	**1.58**
C0470-042-1250-M	**0.470**	**11.94**	**0.042**	**1.07**	**1.250**	**31.75**	**0.479**	**12.16**	**0.360**	**9.14**	**7.15**	**31.79**	**9.27**	**1.62**	**C0470-042-1250-S**	**0.544**	**13.83**	**5.69**	**25.29**	**8.06**	**1.41**
C0470-042-1375-M	**0.470**	**11.94**	**0.042**	**1.07**	**1.375**	**34.93**	**0.521**	**13.23**	**0.389**	**9.88**	**7.15**	**31.79**	**8.37**	**1.46**	**C0470-042-1375-S**	**0.594**	**15.08**	**5.69**	**25.29**	**7.28**	**1.27**
C0470-042-1500-M	**0.470**	**11.94**	**0.042**	**1.07**	**1.500**	**38.10**	**0.563**	**14.31**	**0.418**	**10.62**	**7.15**	**31.79**	**7.63**	**1.34**	**C0470-042-1500-S**	**0.643**	**16.34**	**5.69**	**25.29**	**6.64**	**1.16**
C0470-042-1625-M	**0.470**	**11.94**	**0.042**	**1.07**	**1.625**	**41.28**	**0.606**	**15.38**	**0.447**	**11.35**	**7.15**	**31.79**	**7.01**	**1.23**	**C0470-042-1625-S**	**0.692**	**17.59**	**5.69**	**25.29**	**6.10**	**1.07**
C0470-042-1750-M	**0.470**	**11.94**	**0.042**	**1.07**	**1.750**	**44.45**	**0.648**	**16.46**	**0.476**	**12.09**	**7.15**	**31.79**	**6.49**	**1.14**	**C0470-042-1750-S**	**0.742**	**18.84**	**5.69**	**25.29**	**5.64**	**0.99**
C0470-042-1875-M	**0.470**	**11.94**	**0.042**	**1.07**	**1.875**	**47.63**	**0.690**	**17.53**	**0.505**	**12.83**	**7.15**	**31.79**	**6.03**	**1.06**	**C0470-042-1875-S**	**0.791**	**20.10**	**5.69**	**25.29**	**5.25**	**0.92**
C0470-042-2000-M	**0.470**	**11.94**	**0.042**	**1.07**	**2.000**	**50.80**	**0.733**	**18.61**	**0.534**	**13.57**	**7.15**	**31.79**	**5.64**	**0.99**	**C0470-042-2000-S**	**0.841**	**21.35**	**5.69**	**25.29**	**4.90**	**0.86**
C0470-042-2125-M	**0.470**	**11.94**	**0.042**	**1.07**	**2.125**	**53.98**	**0.775**	**19.68**	**0.563**	**14.31**	**7.15**	**31.79**	**5.29**	**0.93**	**C0470-042-2125-S**	**0.890**	**22.60**	**5.69**	**25.29**	**4.60**	**0.81**
C0470-042-2250-M	**0.470**	**11.94**	**0.042**	**1.07**	**2.250**	**57.15**	**0.817**	**20.76**	**0.593**	**15.05**	**7.15**	**31.79**	**4.99**	**0.87**	**C0470-042-2250-S**	**0.939**	**23.86**	**5.69**	**25.29**	**4.34**	**0.76**
C0470-042-2375-M	**0.470**	**11.94**	**0.042**	**1.07**	**2.375**	**60.33**	**0.859**	**21.83**	**0.622**	**15.79**	**7.15**	**31.79**	**4.72**	**0.83**	**C0470-042-2375-S**	**0.989**	**25.11**	**5.69**	**25.29**	**4.10**	**0.72**
C0470-042-2500-M	**0.470**	**11.94**	**0.042**	**1.07**	**2.500**	**63.50**	**0.902**	**22.91**	**0.651**	**16.53**	**7.15**	**31.79**	**4.47**	**0.78**	**C0470-042-2500-S**	**1.038**	**26.37**	**5.69**	**25.29**	**3.89**	**0.68**
C0470-042-2625-M	**0.470**	**11.94**	**0.042**	**1.07**	**2.625**	**66.68**	**0.944**	**23.98**	**0.680**	**17.27**	**7.15**	**31.79**	**4.25**	**0.74**	**C0470-042-2625-S**	**1.087**	**27.62**	**5.69**	**25.29**	**3.70**	**0.65**
C0470-042-2750-M	**0.470**	**11.94**	**0.042**	**1.07**	**2.750**	**69.85**	**0.986**	**25.06**	**0.709**	**18.01**	**7.15**	**31.79**	**4.05**	**0.71**	**C0470-042-2750-S**	**1.137**	**28.87**	**5.69**	**25.29**	**3.52**	**0.62**
C0470-042-2875-M	**0.470**	**11.94**	**0.042**	**1.07**	**2.875**	**73.03**	**1.029**	**26.13**	**0.738**	**18.75**	**7.15**	**31.79**	**3.87**	**0.68**	**C0470-042-2875-S**	**1.186**	**30.13**	**5.69**	**25.29**	**3.37**	**0.59**
C0470-042-3000-M	**0.470**	**11.94**	**0.042**	**1.07**	**3.000**	**76.20**	**1.071**	**27.20**	**0.767**	**19.49**	**7.15**	**31.79**	**3.71**	**0.65**	**C0470-042-3000-S**	**1.235**	**31.38**	**5.69**	**25.29**	**3.22**	**0.56**
C0470-042-3250-M	**0.470**	**11.94**	**0.042**	**1.07**	**3.250**	**82.55**	**1.156**	**29.35**	**0.825**	**20.97**	**7.15**	**31.79**	**3.41**	**0.60**	**C0470-042-3250-S**	**1.334**	**33.89**	**5.69**	**25.29**	**2.97**	**0.52**
C0470-042-3500-M	**0.470**	**11.94**	**0.042**	**1.07**	**3.500**	**88.90**	**1.240**	**31.50**	**0.884**	**22.44**	**7.15**	**31.79**	**3.16**	**0.55**	**C0470-042-3500-S**	**1.433**	**36.39**	**5.69**	**25.29**	**2.75**	**0.48**
C0470-042-3750-M	**0.470**	**11.94**	**0.042**	**1.07**	**3.750**	**95.25**	**1.325**	**33.65**	**0.942**	**23.92**	**7.15**	**31.79**	**2.95**	**0.52**	**C0470-042-3750-S**	**1.532**	**38.90**	**5.69**	**25.29**	**2.56**	**0.45**
C0470-042-4000-M	**0.470**	**11.94**	**0.042**	**1.07**	**4.000**	**101.60**	**1.410**	**35.80**	**1.000**	**25.40**	**7.15**	**31.79**	**2.76**	**0.48**	**C0470-042-4000-S**	**1.630**	**41.41**	**5.69**	**25.29**	**2.40**	**0.42**
C0470-042-4250-M	**0.470**	**11.94**	**0.042**	**1.07**	**4.250**	**107.95**	**1.494**	**37.95**	**1.058**	**26.88**	**7.15**	**31.79**	**2.59**	**0.45**	**C0470-042-4250-S**	**1.729**	**43.92**	**5.69**	**25.29**	**2.26**	**0.39**
C0470-042-4500-M	**0.470**	**11.94**	**0.042**	**1.07**	**4.500**	**114.30**	**1.579**	**40.10**	**1.116**	**28.36**	**7.15**	**31.79**	**2.45**	**0.43**	**C0470-042-4500-S**	**1.828**	**46.42**	**5.69**	**25.29**	**2.13**	**0.37**
C0470-042-4750-M	**0.470**	**11.94**	**0.042**	**1.07**	**4.750**	**120.65**	**1.663**	**42.25**	**1.175**	**29.84**	**7.15**	**31.79**	**2.32**	**0.41**	**C0470-042-4750-S**	**1.926**	**48.93**	**5.69**	**25.29**	**2.01**	**0.35**
C0470-042-5000-M	**0.470**	**11.94**	**0.042**	**1.07**	**5.000**	**127.00**	**1.748**	**44.40**	**1.233**	**31.32**	**7.15**	**31.79**	**2.20**	**0.38**	**C0470-042-5000-S**	**2.025**	**51.44**	**5.69**	**25.29**	**1.91**	**0.33**
C0470-042-5250-M	**0.470**	**11.94**	**0.042**	**1.07**	**5.250**	**133.35**	**1.833**	**46.55**	**1.291**	**32.79**	**7.15**	**31.79**	**2.09**	**0.37**	**C0470-042-5250-S**	**2.124**	**53.95**	**5.69**	**25.29**	**1.82**	**0.32**
C0470-042-5500-M	**0.470**	**11.94**	**0.042**	**1.07**	**5.500**	**139.70**	**1.917**	**48.70**	**1.349**	**34.27**	**7.15**	**31.79**	**2.00**	**0.35**	**C0470-042-5500-S**	**2.223**	**56.45**	**5.69**	**25.29**	**1.74**	**0.30**
C0470-042-5750-M	**0.470**	**11.94**	**0.042**	**1.07**	**5.750**	**146.05**	**2.002**	**50.85**	**1.408**	**35.75**	**7.15**	**31.79**	**1.91**	**0.33**	**C0470-042-5750-S**	**2.321**	**58.96**	**5.69**	**25.29**	**1.66**	**0.29**
C0470-042-6000-M	**0.470**	**11.94**	**0.042**	**1.07**	**6.000**	**152.40**	**2.087**	**53.00**	**1.466**	**37.23**	**7.15**	**31.79**	**1.83**	**0.32**	**C0470-042-6000-S**	**2.420**	**61.47**	**5.69**	**25.29**	**1.59**	**0.28**
C0470-042-6250-M	**0.470**	**11.94**	**0.042**	**1.07**	**6.250**	**158.75**	**2.171**	**55.15**	**1.524**	**38.71**	**7.15**	**31.79**	**1.75**	**0.31**	**C0470-042-6250-S**	**2.519**	**63.98**	**5.69**	**25.29**	**1.52**	**0.27**
C0470-042-6500-M	**0.470**	**11.94**	**0.042**	**1.07**	**6.500**	**165.10**	**2.256**	**57.30**	**1.582**	**40.19**	**7.15**	**31.79**	**1.68**	**0.29**	**C0470-042-6500-S**	**2.617**	**66.48**	**5.69**	**25.29**	**1.46**	**0.26**
C0470-042-6750-M	**0.470**	**11.94**	**0.042**	**1.07**	**6.750**	**171.45**	**2.340**	**59.45**	**1.640**	**41.67**	**7.15**	**31.79**	**1.62**	**0.28**	**C0470-042-6750-S**	**2.716**	**68.99**	**5.69**	**25.29**	**1.41**	**0.25**
C0470-042-7000-M	**0.470**	**11.94**	**0.042**	**1.07**	**7.000**	**177.80**	**2.425**	**61.60**	**1.699**	**43.14**	**7.15**	**31.79**	**1.56**	**0.27**	**C0470-042-7000-S**	**2.815**	**71.50**	**5.69**	**25.29**	**1.36**	**0.24**
C0470-042-7500-M	**0.470**	**11.94**	**0.042**	**1.07**	**7.500**	**190.50**	**2.594**	**65.90**	**1.815**	**46.10**	**7.15**	**31.79**	**1.46**	**0.25**	**C0470-042-7500-S**	**3.012**	**76.51**	**5.69**	**25.29**	**1.27**	**0.22**
C0470-042-8000-M	**0.470**	**11.94**	**0.042**	**1.07**	**8.000**	**203.20**	**2.764**	**70.19**	**1.931**	**49.06**	**7.15**	**31.79**	**1.37**	**0.24**	**C0470-042-8000-S**	**3.210**	**81.53**	**5.69**	**25.29**	**1.19**	**0.21**
C0470-042-8500-M	**0.470**	**11.94**	**0.042**	**1.07**	**8.500**	**215.90**	**2.933**	**74.49**	**2.048**	**52.02**	**7.15**	**31.79**	**1.28**	**0.22**	**C0470-042-8500-S**	**3.407**	**86.54**	**5.69**	**25.29**	**1.12**	**0.20**
C0470-045-0813-M	**0.470**	**11.94**	**0.045**	**1.14**	**0.813**	**20.64**	**0.354**	**8.99**	**0.287**	**7.28**	**8.66**	**38.53**	**18.89**	**3.31**	**C0470-045-0813-S**	**0.393**	**9.98**	**6.89**	**30.66**	**16.43**	**2.87**
C0470-045-0875-M	**0.470**	**11.94**	**0.045**	**1.14**	**0.875**	**22.23**	**0.377**	**9.57**	**0.303**	**7.70**	**8.66**	**38.53**	**17.39**	**3.04**	**C0470-045-0875-S**	**0.419**	**10.64**	**6.89**	**30.66**	**15.12**	**2.65**
C0470-045-0938-M	**0.470**	**11.94**	**0.045**	**1.14**	**0.938**	**23.81**	**0.400**	**10.15**	**0.320**	**8.12**	**8.66**	**38.53**	**16.10**	**2.82**	**C0470-045-0938-S**	**0.445**	**11.31**	**6.89**	**30.66**	**14.00**	**2.45**
C0470-045-1000-M	**0.470**	**11.94**	**0.045**	**1.14**	**1.000**	**25.40**	**0.422**	**10.73**	**0.336**	**8.55**	**8.66**	**38.53**	**15.00**	**2.62**	**C0470-045-1000-S**	**0.471**	**11.97**	**6.89**	**30.66**	**13.04**	**2.28**
C0470-045-1125-M	**0.470**	**11.94**	**0.045**	**1.14**	**1.125**	**28.58**	**0.468**	**11.89**	**0.370**	**9.39**	**8.66**	**38.53**	**13.19**	**2.31**	**C0470-045-1125-S**	**0.524**	**13.30**	**6.89**	**30.66**	**11.47**	**2.01**
C0470-045-1250-M	**0.470**	**11.94**	**0.045**	**1.14**	**1.250**	**31.75**	**0.514**	**13.05**	**0.403**	**10.23**	**8.66**	**38.53**	**11.77**	**2.06**	**C0470-045-1250-S**	**0.576**	**14.63**	**6.89**	**30.66**	**10.23**	**1.79**
C0470-045-1375-M	**0.470**	**11.94**	**0.045**	**1.14**	**1.375**	**34.93**	**0.559**	**14.21**	**0.436**	**11.08**	**8.66**	**38.53**	**10.62**	**1.86**	**C0470-045-1375-S**	**0.629**	**15.96**	**6.89**	**30.66**	**9.24**	**1.62**
C0470-045-1500-M	**0.470**	**11.94**	**0.045**	**1.14**	**1.500**	**38.10**	**0.605**	**15.37**	**0.469**	**11.92**	**8.66**	**38.53**	**9.68**	**1.69**	**C0470-045-1500-S**	**0.681**	**17.30**	**6.89**	**30.66**	**8.42**	**1.47**
C0470-045-1625-M	**0.470**	**11.94**	**0.045**	**1.14**	**1.625**	**41.28**	**0.651**	**16.53**	**0.503**	**12.77**	**8.66**	**38.53**	**8.89**	**1.56**	**C0470-045-1625-S**	**0.733**	**18.63**	**6.89**	**30.66**	**7.73**	**1.35**
C0470-045-1750-M	**0.470**	**11.94**	**0.045**	**1.14**	**1.750**	**44.45**	**0.696**	**17.69**	**0.536**	**13.61**	**8.66**	**38.53**	**8.22**	**1.44**	**C0470-045-1750-S**	**0.786**	**19.96**	**6.89**	**30.66**	**7.15**	**1.25**
C0470-045-1875-M	**0.470**	**11.94**	**0.045**	**1.14**	**1.875**	**47.63**	**0.742**	**18.84**	**0.569**	**14.45**	**8.66**	**38.53**	**7.65**	**1.34**	**C0470-045-1875-S**	**0.838**	**21.29**	**6.89**	**30.66**	**6.65**	**1.16**
C0470-045-2000-M	**0.470**	**11.94**	**0.045**	**1.14**	**2.000**	**50.80**	**0.788**	**20.00**	**0.602**	**15.30**	**8.66**	**38.53**	**7.15**	**1.25**	**C0470-045-2000-S**	**0.890**	**22.62**	**6.89**	**30.66**	**6.21**	**1.09**
C0470-045-2125-M	**0.470**	**11.94**	**0.045**	**1.14**	**2.125**	**53.98**	**0.833**	**21.16**	**0.636**	**16.14**	**8.66**	**38.53**	**6.71**	**1.17**	**C0470-045-2125-S**	**0.943**	**23.95**	**6.89**	**30.66**	**5.83**	**1.02**
C0470-045-2250-M	**0.470**	**11.94**	**0.045**	**1.14**	**2.250**	**57.15**	**0.879**	**22.32**	**0.669**	**16.99**	**8.66**	**38.53**	**6.32**	**1.11**	**C0470-045-2250-S**	**0.995**	**25.28**	**6.89**	**30.66**	**5.49**	**0.96**
C0470-045-2375-M	**0.470**	**11.94**	**0.045**	**1.14**	**2.375**	**60.33**	**0.925**	**23.48**	**0.702**	**17.83**	**8.66**	**38.53**	**5.97**	**1.05**	**C0470-045-2375-S**	**1.048**	**26.61**	**6.89**	**30.66**	**5.19**	**0.91**
C0470-045-2500-M	**0.470**	**11.94**	**0.045**	**1.14**	**2.500**	**63.50**	**0.970**	**24.64**	**0.735**	**18.67**	**8.66**	**38.53**	**5.66**	**0.99**	**C0470-045-2500-S**	**1.100**	**27.94**	**6.89**	**30.66**	**4.92**	**0.86**
C0470-045-2625-M	**0.470**	**11.94**	**0.045**	**1.14**	**2.625**	**66.68**	**1.016**	**25.80**	**0.768**	**19.52**	**8.66**	**38.53**	**5.38**	**0.94**	**C0470-045-2625-S**	**1.152**	**29.27**	**6.89**	**30.66**	**4.68**	**0.82**
C0470-045-2750-M	**0.470**	**11.94**	**0.045**	**1.14**	**2.750**	**69.85**	**1.061**	**26.96**	**0.802**	**20.36**	**8.66**	**38.53**	**5.13**	**0.90**	**C0470-045-2750-S**	**1.205**	**30.60**	**6.89**	**30.66**	**4.46**	**0.78**
C0470-045-2875-M	**0.470**	**11.94**	**0.045**	**1.14**	**2.875**	**73.03**	**1.107**	**28.12**	**0.835**	**21.21**	**8.66**	**38.53**	**4.90**	**0.86**	**C0470-045-2875-S**	**1.257**	**31.93**	**6.89**	**30.66**	**4.26**	**0.75**
C0470-045-3000-M	**0.470**	**11.94**	**0.045**	**1.14**	**3.000**	**76.20**	**1.153**	**29.28**	**0.868**	**22.05**	**8.66**	**38.53**	**4.69**	**0.82**	**C0470-045-3000-S**	**1.310**	**33.26**	**6.89**	**30.66**	**4.08**	**0.71**

Part Numbers with an "*" are squared and not ground. **Part Numbers in bold** represent the newly expanded Associated Spring RAYMOND compression spring offering.

MUSIC WIRE															STAINLESS STEEL					
Catalog #	Outside Diameter (OD)		Wire Diameter (d)		Free Length (L) Approx		Load Length (L_1)		Solid Height (Sh) Approx		Load (P) at L_1		Spring Rate (R)		Catalog #	Load Length (L_1)		Load (P) at L_1		Spring Rate (R)	
	in	mm	in	mm	in	mm	in	mm	in	mm	lb	N	lb/in	N/mm		in	mm	lb	N	lb/in	N/mm
C0470-045-3250-M	0.470	11.94	0.045	1.14	3.250	82.55	1.244	31.60	0.935	23.74	8.66	38.53	4.32	0.76	**C0470-045-3250-S**	1.414	35.92	6.89	30.66	3.76	0.66
C0470-045-3500-M	0.470	11.94	0.045	1.14	3.500	88.90	1.335	33.92	1.001	25.43	8.66	38.53	4.00	0.70	**C0470-045-3500-S**	1.519	38.58	6.89	30.66	3.48	0.61
C0470-045-3750-M	0.470	11.94	0.045	1.14	3.750	95.25	1.427	36.24	1.068	27.12	8.66	38.53	3.73	0.65	**C0470-045-3750-S**	1.624	41.25	6.89	30.66	3.24	0.57
C0470-045-4000-M	0.470	11.94	0.045	1.14	4.000	101.60	1.518	38.56	1.134	28.80	8.66	38.53	3.49	0.61	**C0470-045-4000-S**	1.729	43.91	6.89	30.66	3.04	0.53
C0470-045-4250-M	0.470	11.94	0.045	1.14	4.250	107.95	1.609	40.88	1.200	30.49	8.66	38.53	3.28	0.57	**C0470-045-4250-S**	1.833	46.57	6.89	30.66	2.85	0.50
C0470-045-4500-M	0.470	11.94	0.045	1.14	4.500	114.30	1.701	43.20	1.267	32.18	8.66	38.53	3.10	0.54	**C0470-045-4500-S**	1.938	49.23	6.89	30.66	2.69	0.47
C0470-045-4750-M	0.470	11.94	0.045	1.14	4.750	120.65	1.792	45.52	1.333	33.87	8.66	38.53	2.93	0.51	**C0470-045-4750-S**	2.043	51.89	6.89	30.66	2.55	0.45
C0470-045-5000-M	0.470	11.94	0.045	1.14	5.000	127.00	1.883	47.83	1.400	35.56	8.66	38.53	2.78	0.49	**C0470-045-5000-S**	2.148	54.55	6.89	30.66	2.42	0.42
C0470-045-5250-M	0.470	11.94	0.045	1.14	5.250	133.35	1.975	50.15	1.466	37.25	8.66	38.53	2.65	0.46	**C0470-045-5250-S**	2.252	57.21	6.89	30.66	2.30	0.40
C0470-045-5500-M	0.470	11.94	0.045	1.14	5.500	139.70	2.066	52.47	1.533	38.93	8.66	38.53	2.52	0.44	**C0470-045-5500-S**	2.357	59.87	6.89	30.66	2.19	0.38
C0470-045-5750-M	0.470	11.94	0.045	1.14	5.750	146.05	2.157	54.79	1.599	40.62	8.66	38.53	2.41	0.42	**C0470-045-5750-S**	2.462	62.53	6.89	30.66	2.10	0.37
C0470-045-6000-M	0.470	11.94	0.045	1.14	6.000	152.40	2.248	57.11	1.666	42.31	8.66	38.53	2.31	0.40	**C0470-045-6000-S**	2.567	65.20	6.89	30.66	2.01	0.35
C0470-045-6250-M	0.470	11.94	0.045	1.14	6.250	158.75	2.340	59.43	1.732	44.00	8.66	38.53	2.22	0.39	**C0470-045-6250-S**	2.672	67.86	6.89	30.66	1.93	0.34
C0470-045-6500-M	0.470	11.94	0.045	1.14	6.500	165.10	2.431	61.75	1.799	45.69	8.66	38.53	2.13	0.37	**C0470-045-6500-S**	2.776	70.52	6.89	30.66	1.85	0.32
C0470-045-6750-M	0.470	11.94	0.045	1.14	6.750	171.45	2.522	64.07	1.865	47.37	8.66	38.53	2.05	0.36	**C0470-045-6750-S**	2.881	73.18	6.89	30.66	1.78	0.31
C0470-045-7000-M	0.470	11.94	0.045	1.14	7.000	177.80	2.614	66.39	1.932	49.06	8.66	38.53	1.98	0.35	**C0470-045-7000-S**	2.986	75.84	6.89	30.66	1.72	0.30
C0470-045-7500-M	0.470	11.94	0.045	1.14	7.500	190.50	2.796	71.03	2.065	52.44	8.66	38.53	1.84	0.32	**C0470-045-7500-S**	3.195	81.16	6.89	30.66	1.60	0.28
C0470-045-8000-M	0.470	11.94	0.045	1.14	8.000	203.20	2.979	75.66	2.197	55.82	8.66	38.53	1.73	0.30	**C0470-045-8000-S**	3.405	86.49	6.89	30.66	1.50	0.26
C0470-045-8500-M	0.470	11.94	0.045	1.14	8.500	215.90	3.162	80.30	2.330	59.19	8.66	38.53	1.62	0.28	**C0470-045-8500-S**	3.614	91.81	6.89	30.66	1.41	0.25
C0470-047-0813-M	0.470	11.94	0.047	1.19	0.813	20.64	0.370	9.39	0.306	7.77	9.78	43.49	22.07	3.86	**C0470-047-0813-S**	0.407	10.34	7.78	34.61	19.19	3.36
C0470-047-0875-M	0.470	11.94	0.047	1.19	0.875	22.23	0.393	9.99	0.324	8.23	9.78	43.49	20.30	3.55	**C0470-047-0875-S**	0.434	11.03	7.78	34.61	17.66	3.09
C0470-047-0938-M	0.470	11.94	0.047	1.19	0.938	23.81	0.417	10.60	0.342	8.69	9.78	43.49	18.80	3.29	**C0470-047-0938-S**	0.462	11.72	7.78	34.61	16.35	2.86
C0470-047-1000-M	0.470	11.94	0.047	1.19	1.000	25.40	0.441	11.21	0.360	9.14	9.78	43.49	17.50	3.06	**C0470-047-1000-S**	0.489	12.42	7.78	34.61	15.22	2.66
C0470-047-1125-M	0.470	11.94	0.047	1.19	1.125	28.58	0.489	12.43	0.396	10.06	9.78	43.49	15.38	2.69	**C0470-047-1125-S**	0.543	13.80	7.78	34.61	13.38	2.34
C0470-047-1250-M	0.470	11.94	0.047	1.19	1.250	31.75	0.537	13.65	0.432	10.98	9.78	43.49	13.72	2.40	**C0470-047-1250-S**	0.598	15.18	7.78	34.61	11.93	2.09
C0470-047-1375-M	0.470	11.94	0.047	1.19	1.375	34.93	0.585	14.87	0.468	11.89	9.78	43.49	12.38	2.17	**C0470-047-1375-S**	0.652	16.57	7.78	34.61	10.77	1.88
C0470-047-1500-M	0.470	11.94	0.047	1.19	1.500	38.10	0.633	16.08	0.504	12.81	9.78	43.49	11.28	1.97	**C0470-047-1500-S**	0.707	17.95	7.78	34.61	9.81	1.72
C0470-047-1625-M	0.470	11.94	0.047	1.19	1.625	41.28	0.681	17.30	0.540	13.72	9.78	43.49	10.36	1.81	**C0470-047-1625-S**	0.761	19.33	7.78	34.61	9.01	1.58
C0470-047-1750-M	0.470	11.94	0.047	1.19	1.750	44.45	0.729	18.52	0.576	14.64	9.78	43.49	9.58	1.68	**C0470-047-1750-S**	0.816	20.72	7.78	34.61	8.33	1.46
C0470-047-1875-M	0.470	11.94	0.047	1.19	1.875	47.63	0.777	19.74	0.612	15.55	9.78	43.49	8.90	1.56	**C0470-047-1875-S**	0.870	22.10	7.78	34.61	7.74	1.35
C0470-047-2000-M	0.470	11.94	0.047	1.19	2.000	50.80	0.825	20.95	0.648	16.47	9.78	43.49	8.32	1.46	**C0470-047-2000-S**	0.925	23.48	7.78	34.61	7.24	1.27
C0470-047-2125-M	0.470	11.94	0.047	1.19	2.125	53.98	0.873	22.17	0.684	17.39	9.78	43.49	7.81	1.37	**C0470-047-2125-S**	0.979	24.87	7.78	34.61	6.79	1.19
C0470-047-2250-M	0.470	11.94	0.047	1.19	2.250	57.15	0.921	23.39	0.721	18.30	9.78	43.49	7.36	1.29	**C0470-047-2250-S**	1.033	26.25	7.78	34.61	6.40	1.12
C0470-047-2375-M	0.470	11.94	0.047	1.19	2.375	60.33	0.969	24.61	0.757	19.22	9.78	43.49	6.95	1.22	**C0470-047-2375-S**	1.088	27.63	7.78	34.61	6.05	1.06
C0470-047-2500-M	0.470	11.94	0.047	1.19	2.500	63.50	1.017	25.82	0.793	20.13	9.78	43.49	6.59	1.15	**C0470-047-2500-S**	1.142	29.02	7.78	34.61	5.73	1.00
C0470-047-2625-M	0.470	11.94	0.047	1.19	2.625	66.68	1.065	27.04	0.829	21.05	9.78	43.49	6.27	1.10	**C0470-047-2625-S**	1.197	30.40	7.78	34.61	5.45	0.95
C0470-047-2750-M	0.470	11.94	0.047	1.19	2.750	69.85	1.113	28.26	0.865	21.96	9.78	43.49	5.97	1.04	**C0470-047-2750-S**	1.251	31.78	7.78	34.61	5.19	0.91
C0470-047-2875-M	0.470	11.94	0.047	1.19	2.875	73.03	1.160	29.48	0.901	22.88	9.78	43.49	5.70	1.00	**C0470-047-2875-S**	1.306	33.17	7.78	34.61	4.96	0.87
C0470-047-3000-M	0.470	11.94	0.047	1.19	3.000	76.20	1.208	30.69	0.937	23.80	9.78	43.49	5.46	0.95	**C0470-047-3000-S**	1.360	34.55	7.78	34.61	4.75	0.83
C0470-047-3250-M	0.470	11.94	0.047	1.19	3.250	82.55	1.304	33.13	1.009	25.63	9.78	43.49	5.03	0.88	**C0470-047-3250-S**	1.469	37.32	7.78	34.61	4.37	0.76
C0470-047-3500-M	0.470	11.94	0.047	1.19	3.500	88.90	1.400	35.56	1.081	27.46	9.78	43.49	4.66	0.81	**C0470-047-3500-S**	1.578	40.09	7.78	34.61	4.05	0.71
C0470-047-3750-M	0.470	11.94	0.047	1.19	3.750	95.25	1.496	38.00	1.153	29.29	9.78	43.49	4.34	0.76	**C0470-047-3750-S**	1.687	42.85	7.78	34.61	3.77	0.66
C0470-047-4000-M	0.470	11.94	0.047	1.19	4.000	101.60	1.592	40.43	1.225	31.12	9.78	43.49	4.06	0.71	**C0470-047-4000-S**	1.796	45.62	7.78	34.61	3.53	0.62
C0470-047-4250-M	0.470	11.94	0.047	1.19	4.250	107.95	1.688	42.87	1.297	32.95	9.78	43.49	3.82	0.67	**C0470-047-4250-S**	1.905	48.39	7.78	34.61	3.32	0.58
C0470-047-4500-M	0.470	11.94	0.047	1.19	4.500	114.30	1.784	45.30	1.369	34.78	9.78	43.49	3.60	0.63	**C0470-047-4500-S**	2.014	51.15	7.78	34.61	3.13	0.55
C0470-047-4750-M	0.470	11.94	0.047	1.19	4.750	120.65	1.879	47.74	1.442	36.62	9.78	43.49	3.41	0.60	**C0470-047-4750-S**	2.123	53.92	7.78	34.61	2.96	0.52
C0470-047-5000-M	0.470	11.94	0.047	1.19	5.000	127.00	1.975	50.17	1.514	38.45	9.78	43.49	3.23	0.57	**C0470-047-5000-S**	2.232	56.69	7.78	34.61	2.81	0.49
C0470-047-5250-M	0.470	11.94	0.047	1.19	5.250	133.35	2.071	52.61	1.586	40.28	9.78	43.49	3.08	0.54	**C0470-047-5250-S**	2.341	59.45	7.78	34.61	2.67	0.47
C0470-047-5500-M	0.470	11.94	0.047	1.19	5.500	139.70	2.167	55.04	1.658	42.11	9.78	43.49	2.93	0.51	**C0470-047-5500-S**	2.450	62.22	7.78	34.61	2.55	0.45
C0470-047-5750-M	0.470	11.94	0.047	1.19	5.750	146.05	2.263	57.48	1.730	43.94	9.78	43.49	2.80	0.49	**C0470-047-5750-S**	2.559	64.99	7.78	34.61	2.44	0.43
C0470-047-6000-M	0.470	11.94	0.047	1.19	6.000	152.40	2.359	59.91	1.802	45.77	9.78	43.49	2.69	0.47	**C0470-047-6000-S**	2.668	67.75	7.78	34.61	2.34	0.41
C0470-047-6250-M	0.470	11.94	0.047	1.19	6.250	158.75	2.455	62.35	1.874	47.60	9.78	43.49	2.58	0.45	**C0470-047-6250-S**	2.776	70.52	7.78	34.61	2.24	0.39
C0470-047-6500-M	0.470	11.94	0.047	1.19	6.500	165.10	2.551	64.78	1.946	49.44	9.78	43.49	2.48	0.43	**C0470-047-6500-S**	2.885	73.29	7.78	34.61	2.15	0.38
C0470-047-6750-M	0.470	11.94	0.047	1.19	6.750	171.45	2.646	67.22	2.018	51.27	9.78	43.49	2.38	0.42	**C0470-047-6750-S**	2.994	76.06	7.78	34.61	2.07	0.36
C0470-047-7000-M	0.470	11.94	0.047	1.19	7.000	177.80	2.742	69.66	2.091	53.10	9.78	43.49	2.30	0.40	**C0470-047-7000-S**	3.103	78.82	7.78	34.61	2.00	0.35
C0470-047-7500-M	0.470	11.94	0.047	1.19	7.500	190.50	2.934	74.53	2.235	56.76	9.78	43.49	2.14	0.37	**C0470-047-7500-S**	3.321	84.36	7.78	34.61	1.86	0.33
C0470-047-8000-M	0.470	11.94	0.047	1.19	8.000	203.20	3.126	79.40	2.379	60.43	9.78	43.49	2.01	0.35	**C0470-047-8000-S**	3.539	89.89	7.78	34.61	1.74	0.31
C0470-049-0813-M	0.470	11.94	0.049	1.25	0.813	20.64	0.385	9.78	0.325	8.26	10.98	48.82	25.69	4.50	**C0470-049-0813-S**	0.421	10.71	8.73	38.85	22.34	3.91
C0470-049-0875-M	0.470	11.94	0.049	1.25	0.875	22.23	0.410	10.42	0.345	8.76	10.98	48.82	23.62	4.13	**C0470-049-0875-S**	0.450	11.42	8.73	38.85	20.54	3.59
C0470-049-0938-M	0.470	11.94	0.049	1.25	0.938	23.81	0.435	11.06	0.364	9.25	10.98	48.82	21.86	3.83	**C0470-049-0938-S**	0.478	12.14	8.73	38.85	19.01	3.33
C0470-049-1000-M	0.470	11.94	0.049	1.25	1.000	25.40	0.461	11.70	0.384	9.75	10.98	48.82	20.35	3.56	**C0470-049-1000-S**	0.506	12.86	8.73	38.85	17.70	3.10
C0470-049-1125-M	0.470	11.94	0.049	1.25	1.125	28.58	0.511	12.98	0.423	10.73	10.98	48.82	17.87	3.13	**C0470-049-1125-S**	0.563	14.30	8.73	38.85	15.54	2.72
C0470-049-1250-M	0.470	11.94	0.049	1.25	1.250	31.75	0.561	14.25	0.462	11.72	10.98	48.82	15.93	2.79	**C0470-049-1250-S**	0.620	15.74	8.73	38.85	13.86	2.42
C0470-049-1375-M	0.470	11.94	0.049	1.25	1.375	34.93	0.611	15.53	0.500	12.71	10.98	48.82	14.37	2.52	**C0470-049-1375-S**	0.676	17.17	8.73	38.85	12.50	2.19

FOR INFORMATION ON ALTERNATIVE FINISHES, SEE PAGE 311

Part Numbers with an "*" are squared and not ground. **Part Numbers in bold** represent the newly expanded Associated Spring RAYMOND compression spring offering.

(OD) 0.470 - 0.470

MUSIC WIRE															STAINLESS STEEL						
Catalog #	Outside Diameter (OD)		Wire Diameter (d)		Free Length (L) Approx		Load Length (L_1)		Solid Height (Sh) Approx		Load (P) at L_1		Spring Rate (R)		Catalog #	Load Length (L_1)		Load (P) at L_1		Spring Rate (R)	
	in	mm	in	mm	in	mm	in	mm	in	mm	lb	N	lb/in	N/mm		in	mm	lb	N	lb/in	N/mm
C0470-049-1500-M	0.470	11.94	0.049	1.25	1.500	38.10	0.662	16.80	0.539	13.70	10.98	48.82	13.09	2.29	**C0470-049-1500-S**	0.733	18.61	8.73	38.85	11.38	1.99
C0470-049-1625-M	0.470	11.94	0.049	1.25	1.625	41.28	0.712	18.08	0.578	14.69	10.98	48.82	12.02	2.10	**C0470-049-1625-S**	0.789	20.05	8.73	38.85	10.45	1.83
C0470-049-1750-M	0.470	11.94	0.049	1.25	1.750	44.45	0.762	19.36	0.617	15.68	10.98	48.82	11.11	1.94	**C0470-049-1750-S**	0.846	21.49	8.73	38.85	9.66	1.69
C0470-049-1875-M	0.470	11.94	0.049	1.25	1.875	47.63	0.812	20.63	0.656	16.66	10.98	48.82	10.33	1.81	**C0470-049-1875-S**	0.902	22.92	8.73	38.85	8.98	1.57
C0470-049-2000-M	0.470	11.94	0.049	1.25	2.000	50.80	0.863	21.91	0.695	17.65	10.98	48.82	9.65	1.69	**C0470-049-2000-S**	0.959	24.36	8.73	38.85	8.39	1.47
C0470-049-2125-M	0.470	11.94	0.049	1.25	2.125	53.98	0.913	23.19	0.734	18.64	10.98	48.82	9.06	1.58	**C0470-049-2125-S**	1.016	25.80	8.73	38.85	7.87	1.38
C0470-049-2250-M	0.470	11.94	0.049	1.25	2.250	57.15	0.963	24.46	0.773	19.63	10.98	48.82	8.53	1.49	**C0470-049-2250-S**	1.072	27.24	8.73	38.85	7.42	1.30
C0470-049-2375-M	0.470	11.94	0.049	1.25	2.375	60.33	1.013	25.74	0.812	20.62	10.98	48.82	8.06	1.41	**C0470-049-2375-S**	1.129	28.67	8.73	38.85	7.01	1.23
C0470-049-2500-M	0.470	11.94	0.049	1.25	2.500	63.50	1.064	27.02	0.851	21.61	10.98	48.82	7.64	1.34	**C0470-049-2500-S**	1.185	30.11	8.73	38.85	6.65	1.16
C0470-049-2625-M	0.470	11.94	0.049	1.25	2.625	66.68	1.114	28.29	0.890	22.59	10.98	48.82	7.26	1.27	**C0470-049-2625-S**	1.242	31.55	8.73	38.85	6.32	1.11
C0470-049-2750-M	0.470	11.94	0.049	1.25	2.750	69.85	1.164	29.57	0.928	23.58	10.98	48.82	6.92	1.21	**C0470-049-2750-S**	1.299	32.99	8.73	38.85	6.02	1.05
C0470-049-2875-M	0.470	11.94	0.049	1.25	2.875	73.03	1.214	30.84	0.967	24.57	10.98	48.82	6.61	1.16	**C0470-049-2875-S**	1.355	34.42	8.73	38.85	5.75	1.01
C0470-049-3000-M	0.470	11.94	0.049	1.25	3.000	76.20	1.265	32.12	1.006	25.56	10.98	48.82	6.33	1.11	**C0470-049-3000-S**	1.412	35.86	8.73	38.85	5.50	0.96
C0470-049-3250-M	0.470	11.94	0.049	1.25	3.250	82.55	1.365	34.67	1.084	27.54	10.98	48.82	5.82	1.02	**C0470-049-3250-S**	1.525	38.73	8.73	38.85	5.06	0.89
C0470-049-3500-M	0.470	11.94	0.049	1.25	3.500	88.90	1.466	37.23	1.162	29.51	10.98	48.82	5.40	0.94	**C0470-049-3500-S**	1.638	41.61	8.73	38.85	4.69	0.82
C0470-049-3750-M	0.470	11.94	0.049	1.25	3.750	95.25	1.566	39.78	1.240	31.49	10.98	48.82	5.03	0.88	**C0470-049-3750-S**	1.751	44.48	8.73	38.85	4.37	0.76
C0470-049-4000-M	0.470	11.94	0.049	1.25	4.000	101.60	1.667	42.33	1.318	33.47	10.98	48.82	4.70	0.82	**C0470-049-4000-S**	1.865	47.36	8.73	38.85	4.09	0.72
C0470-049-4250-M	0.470	11.94	0.049	1.25	4.250	107.95	1.767	44.88	1.395	35.44	10.98	48.82	4.42	0.77	**C0470-049-4250-S**	1.978	50.23	8.73	38.85	3.84	0.67
C0470-049-4500-M	0.470	11.94	0.049	1.25	4.500	114.30	1.868	47.44	1.473	37.42	10.98	48.82	4.17	0.73	**C0470-049-4500-S**	2.091	53.11	8.73	38.85	3.63	0.63
C0470-049-4750-M	0.470	11.94	0.049	1.25	4.750	120.65	1.968	49.99	1.551	39.40	10.98	48.82	3.95	0.69	**C0470-049-4750-S**	2.204	55.98	8.73	38.85	3.43	0.60
C0470-049-5000-M	0.470	11.94	0.049	1.25	5.000	127.00	2.069	52.54	1.629	41.37	10.98	48.82	3.74	0.66	**C0470-049-5000-S**	2.317	58.86	8.73	38.85	3.26	0.57
C0470-049-5250-M	0.470	11.94	0.049	1.25	5.250	133.35	2.169	55.10	1.707	43.35	10.98	48.82	3.56	0.62	**C0470-049-5250-S**	2.430	61.73	8.73	38.85	3.10	0.54
C0470-049-5500-M	0.470	11.94	0.049	1.25	5.500	139.70	2.270	57.65	1.785	45.33	10.98	48.82	3.40	0.59	**C0470-049-5500-S**	2.544	64.61	8.73	38.85	2.96	0.52
C0470-049-5750-M	0.470	11.94	0.049	1.25	5.750	146.05	2.370	60.20	1.862	47.30	10.98	48.82	3.25	0.57	**C0470-049-5750-S**	2.657	67.48	8.73	38.85	2.82	0.49
C0470-049-6000-M	0.470	11.94	0.049	1.25	6.000	152.40	2.471	62.75	1.940	49.28	10.98	48.82	3.11	0.54	**C0470-049-6000-S**	2.770	70.36	8.73	38.85	2.70	0.47
C0470-049-6250-M	0.470	11.94	0.049	1.25	6.250	158.75	2.571	65.31	2.018	51.26	10.98	48.82	2.98	0.52	**C0470-049-6250-S**	2.883	73.23	8.73	38.85	2.59	0.45
C0470-049-6500-M	0.470	11.94	0.049	1.25	6.500	165.10	2.672	67.86	2.096	53.23	10.98	48.82	2.87	0.50	**C0470-049-6500-S**	2.996	76.11	8.73	38.85	2.49	0.44
C0470-049-6750-M	0.470	11.94	0.049	1.25	6.750	171.45	2.772	70.41	2.174	55.21	10.98	48.82	2.76	0.48	**C0470-049-6750-S**	3.110	78.98	8.73	38.85	2.40	0.42
C0470-049-7000-M	0.470	11.94	0.049	1.25	7.000	177.80	2.873	72.97	2.251	57.19	10.98	48.82	2.66	0.47	**C0470-049-7000-S**	3.223	81.86	8.73	38.85	2.31	0.40
C0470-049-7500-M	0.470	11.94	0.049	1.25	7.500	190.50	3.074	78.07	2.407	61.14	10.98	48.82	2.48	0.43	**C0470-049-7500-S**	3.449	87.61	8.73	38.85	2.16	0.38
C0470-049-8000-M	0.470	11.94	0.049	1.25	8.000	203.20	3.275	83.18	2.563	65.10	10.98	48.82	2.32	0.41	**C0470-049-8000-S**	3.675	93.36	8.73	38.85	2.02	0.35
C0470-051-0750-M	0.470	11.94	0.051	1.30	0.750	19.05	0.375	9.52	0.324	8.22	12.26	54.55	32.67	5.72	**C0470-051-0750-S**	0.407	10.33	9.76	43.41	28.41	4.97
C0470-051-0813-M	0.470	11.94	0.051	1.30	0.813	20.64	0.401	10.18	0.345	8.76	12.26	54.55	29.80	5.21	**C0470-051-0813-S**	0.436	11.07	9.76	43.41	25.91	4.53
C0470-051-0875-M	0.470	11.94	0.051	1.30	0.875	22.23	0.427	10.85	0.366	9.29	12.26	54.55	27.39	4.79	**C0470-051-0875-S**	0.465	11.82	9.76	43.41	23.82	4.17
C0470-051-0938-M	0.470	11.94	0.051	1.30	0.938	23.81	0.454	11.52	0.386	9.82	12.26	54.55	25.34	4.43	**C0470-051-0938-S**	0.495	12.56	9.76	43.41	22.03	3.86
C0470-051-1000-M	0.470	11.94	0.051	1.30	1.000	25.40	0.480	12.19	0.407	10.35	12.26	54.55	23.58	4.13	**C0470-051-1000-S**	0.524	13.31	9.76	43.41	20.50	3.59
C0470-051-1125-M	0.470	11.94	0.051	1.30	1.125	28.58	0.532	13.52	0.449	11.41	12.26	54.55	20.69	3.62	**C0470-051-1125-S**	0.583	14.80	9.76	43.41	18.00	3.15
C0470-051-1250-M	0.470	11.94	0.051	1.30	1.250	31.75	0.585	14.86	0.491	12.47	12.26	54.55	18.44	3.23	**C0470-051-1250-S**	0.641	16.29	9.76	43.41	16.04	2.81
C0470-051-1375-M	0.470	11.94	0.051	1.30	1.375	34.93	0.638	16.19	0.533	13.53	12.26	54.55	16.63	2.91	**C0470-051-1375-S**	0.700	17.79	9.76	43.41	14.46	2.53
C0470-051-1500-M	0.470	11.94	0.051	1.30	1.500	38.10	0.690	17.53	0.575	14.59	12.26	54.55	15.14	2.65	**C0470-051-1500-S**	0.759	19.28	9.76	43.41	13.17	2.30
C0470-051-1625-M	0.470	11.94	0.051	1.30	1.625	41.28	0.743	18.87	0.616	15.66	12.26	54.55	13.90	2.43	**C0470-051-1625-S**	0.818	20.77	9.76	43.41	12.09	2.12
C0470-051-1750-M	0.470	11.94	0.051	1.30	1.750	44.45	0.795	20.20	0.658	16.72	12.26	54.55	12.85	2.25	**C0470-051-1750-S**	0.876	22.26	9.76	43.41	11.17	1.95
C0470-051-1875-M	0.470	11.94	0.051	1.30	1.875	47.63	0.848	21.54	0.700	17.78	12.26	54.55	11.94	2.09	**C0470-051-1875-S**	0.935	23.75	9.76	43.41	10.38	1.82
C0470-051-2000-M	0.470	11.94	0.051	1.30	2.000	50.80	0.901	22.87	0.742	18.84	12.26	54.55	11.15	1.95	**C0470-051-2000-S**	0.994	25.25	9.76	43.41	9.70	1.70
C0470-051-2125-M	0.470	11.94	0.051	1.30	2.125	53.98	0.953	24.21	0.784	19.90	12.26	54.55	10.47	1.83	**C0470-051-2125-S**	1.053	26.74	9.76	43.41	9.10	1.59
C0470-051-2250-M	0.470	11.94	0.051	1.30	2.250	57.15	1.006	25.54	0.825	20.97	12.26	54.55	9.86	1.72	**C0470-051-2250-S**	1.111	28.23	9.76	43.41	8.57	1.50
C0470-051-2375-M	0.470	11.94	0.051	1.30	2.375	60.33	1.058	26.88	0.867	22.03	12.26	54.55	9.31	1.63	**C0470-051-2375-S**	1.170	29.72	9.76	43.41	8.10	1.42
C0470-051-2500-M	0.470	11.94	0.051	1.30	2.500	63.50	1.111	28.22	0.909	23.09	12.26	54.55	8.83	1.54	**C0470-051-2500-S**	1.229	31.21	9.76	43.41	7.68	1.34
C0470-051-2625-M	0.470	11.94	0.051	1.30	2.625	66.68	1.163	29.55	0.951	24.15	12.26	54.55	8.39	1.47	**C0470-051-2625-S**	1.288	32.71	9.76	43.41	7.30	1.28
C0470-051-2750-M	0.470	11.94	0.051	1.30	2.750	69.85	1.216	30.89	0.993	25.21	12.26	54.55	8.00	1.40	**C0470-051-2750-S**	1.346	34.20	9.76	43.41	6.95	1.22
C0470-051-2875-M	0.470	11.94	0.051	1.30	2.875	73.03	1.269	32.22	1.034	26.27	12.26	54.55	7.63	1.34	**C0470-051-2875-S**	1.405	35.69	9.76	43.41	6.64	1.16
C0470-051-3000-M	0.470	11.94	0.051	1.30	3.000	76.20	1.321	33.56	1.076	27.34	12.26	54.55	7.31	1.28	**C0470-051-3000-S**	1.464	37.18	9.76	43.41	6.35	1.11
C0470-051-3250-M	0.470	11.94	0.051	1.30	3.250	82.55	1.426	36.23	1.160	29.46	12.26	54.55	6.73	1.18	**C0470-051-3250-S**	1.581	40.17	9.76	43.41	5.85	1.02
C0470-051-3500-M	0.470	11.94	0.051	1.30	3.500	88.90	1.532	38.90	1.243	31.58	12.26	54.55	6.23	1.09	**C0470-051-3500-S**	1.699	43.15	9.76	43.41	5.42	0.95
C0470-051-3750-M	0.470	11.94	0.051	1.30	3.750	95.25	1.637	41.57	1.327	33.71	12.26	54.55	5.80	1.02	**C0470-051-3750-S**	1.816	46.13	9.76	43.41	5.05	0.88
C0470-051-4000-M	0.470	11.94	0.051	1.30	4.000	101.60	1.742	44.25	1.411	35.83	12.26	54.55	5.43	0.95	**C0470-051-4000-S**	1.934	49.12	9.76	43.41	4.72	0.83
C0470-051-4250-M	0.470	11.94	0.051	1.30	4.250	107.95	1.847	46.92	1.494	37.95	12.26	54.55	5.10	0.89	**C0470-051-4250-S**	2.051	52.10	9.76	43.41	4.44	0.78
C0470-051-4500-M	0.470	11.94	0.051	1.30	4.500	114.30	1.952	49.59	1.578	40.08	12.26	54.55	4.81	0.84	**C0470-051-4500-S**	2.169	55.09	9.76	43.41	4.19	0.73
C0470-051-4750-M	0.470	11.94	0.051	1.30	4.750	120.65	2.057	52.26	1.661	42.20	12.26	54.55	4.56	0.80	**C0470-051-4750-S**	2.286	58.07	9.76	43.41	3.96	0.69
C0470-051-5000-M	0.470	11.94	0.051	1.30	5.000	127.00	2.163	54.93	1.745	44.32	12.26	54.55	4.32	0.76	**C0470-051-5000-S**	2.404	61.05	9.76	43.41	3.76	0.66
C0470-051-5250-M	0.470	11.94	0.051	1.30	5.250	133.35	2.268	57.60	1.829	46.45	12.26	54.55	4.11	0.72	**C0470-051-5250-S**	2.521	64.04	9.76	43.41	3.58	0.63
C0470-051-5500-M	0.470	11.94	0.051	1.30	5.500	139.70	2.373	60.27	1.912	48.57	12.26	54.55	3.92	0.69	**C0470-051-5500-S**	2.639	67.02	9.76	43.41	3.41	0.60
C0470-051-5750-M	0.470	11.94	0.051	1.30	5.750	146.05	2.478	62.95	1.996	50.69	12.26	54.55	3.75	0.66	**C0470-051-5750-S**	2.756	70.01	9.76	43.41	3.26	0.57
C0470-051-6000-M	0.470	11.94	0.051	1.30	6.000	152.40	2.583	65.62	2.079	52.82	12.26	54.55	3.59	0.63	**C0470-051-6000-S**	2.874	72.99	9.76	43.41	3.12	0.55

Part Numbers with an "*" are squared and not ground. **Part Numbers in bold** represent the newly expanded Associated Spring RAYMOND compression spring offering.

MUSIC WIRE															STAINLESS STEEL					
Catalog #	Outside Diameter (OD)		Wire Diameter (d)		Free Length (L) Approx		Load Length (L_1)		Solid Height (Sh) Approx		Load (P) at L_1		Spring Rate (R)		Catalog #	Load Length (L_1)		Load (P) at L_1		Spring Rate (R)	
	in	mm	in	mm	in	mm	in	mm	in	mm	lb	N	lb/in	N/mm		in	mm	lb	N	lb/in	N/mm
C0470-051-6250-M	**0.470**	**11.94**	**0.051**	**1.30**	**6.250**	**158.75**	**2.689**	**68.29**	**2.163**	**54.94**	**12.26**	**54.55**	**3.44**	**0.60**	**C0470-051-6250-S**	**2.991**	**75.97**	**9.76**	**43.41**	**2.99**	**0.52**
C0470-051-6500-M	**0.470**	**11.94**	**0.051**	**1.30**	**6.500**	**165.10**	**2.794**	**70.96**	**2.247**	**57.06**	**12.26**	**54.55**	**3.31**	**0.58**	**C0470-051-6500-S**	**3.109**	**78.96**	**9.76**	**43.41**	**2.88**	**0.50**
C0470-051-6750-M	**0.470**	**11.94**	**0.051**	**1.30**	**6.750**	**171.45**	**2.899**	**73.63**	**2.330**	**59.19**	**12.26**	**54.55**	**3.18**	**0.56**	**C0470-051-6750-S**	**3.226**	**81.94**	**9.76**	**43.41**	**2.77**	**0.48**
C0470-051-7000-M	**0.470**	**11.94**	**0.051**	**1.30**	**7.000**	**177.80**	**3.004**	**76.30**	**2.414**	**61.31**	**12.26**	**54.55**	**3.07**	**0.54**	**C0470-051-7000-S**	**3.344**	**84.93**	**9.76**	**43.41**	**2.67**	**0.47**
C0470-051-7500-M	**0.470**	**11.94**	**0.051**	**1.30**	**7.500**	**190.50**	**3.214**	**81.65**	**2.581**	**65.56**	**12.26**	**54.55**	**2.86**	**0.50**	**C0470-051-7500-S**	**3.579**	**90.89**	**9.76**	**43.41**	**2.49**	**0.44**
C0470-051-8000-M	**0.470**	**11.94**	**0.051**	**1.30**	**8.000**	**203.20**	**3.425**	**86.99**	**2.748**	**69.81**	**12.26**	**54.55**	**2.68**	**0.47**	**C0470-051-8000-S**	**3.813**	**96.86**	**9.76**	**43.41**	**2.33**	**0.41**
C0470-055-0750-M	**0.470**	**11.94**	**0.055**	**1.40**	**0.750**	**19.05**	**0.403**	**10.25**	**0.359**	**9.13**	**15.11**	**67.22**	**43.60**	**7.63**	**C0470-055-0750-S**	**0.433**	**11.00**	**12.02**	**53.46**	**37.91**	**6.63**
C0470-055-0813-M	**0.470**	**11.94**	**0.055**	**1.40**	**0.813**	**20.64**	**0.432**	**10.97**	**0.383**	**9.73**	**15.11**	**67.22**	**39.72**	**6.95**	**C0470-055-0813-S**	**0.465**	**11.80**	**12.02**	**53.46**	**34.54**	**6.04**
C0470-055-0875-M	**0.470**	**11.94**	**0.055**	**1.40**	**0.875**	**22.23**	**0.461**	**11.70**	**0.407**	**10.34**	**15.11**	**67.22**	**36.47**	**6.38**	**C0470-055-0875-S**	**0.496**	**12.60**	**12.02**	**53.46**	**31.72**	**5.55**
C0470-055-0938-M	**0.470**	**11.94**	**0.055**	**1.40**	**0.938**	**23.81**	**0.489**	**12.43**	**0.431**	**10.94**	**15.11**	**67.22**	**33.72**	**5.90**	**C0470-055-0938-S**	**0.528**	**13.40**	**12.02**	**53.46**	**29.32**	**5.13**
C0470-055-1000-M	**0.470**	**11.94**	**0.055**	**1.40**	**1.000**	**25.40**	**0.518**	**13.16**	**0.455**	**11.54**	**15.11**	**67.22**	**31.35**	**5.49**	**C0470-055-1000-S**	**0.559**	**14.20**	**12.02**	**53.46**	**27.26**	**4.77**
C0470-055-1125-M	**0.470**	**11.94**	**0.055**	**1.40**	**1.125**	**28.58**	**0.575**	**14.61**	**0.502**	**12.75**	**15.11**	**67.22**	**27.49**	**4.81**	**C0470-055-1125-S**	**0.622**	**15.81**	**12.02**	**53.46**	**23.90**	**4.18**
C0470-055-1250-M	**0.470**	**11.94**	**0.055**	**1.40**	**1.250**	**31.75**	**0.633**	**16.07**	**0.550**	**13.96**	**15.11**	**67.22**	**24.48**	**4.28**	**C0470-055-1250-S**	**0.685**	**17.41**	**12.02**	**53.46**	**21.28**	**3.72**
C0470-055-1375-M	**0.470**	**11.94**	**0.055**	**1.40**	**1.375**	**34.93**	**0.690**	**17.52**	**0.597**	**15.17**	**15.11**	**67.22**	**22.06**	**3.86**	**C0470-055-1375-S**	**0.748**	**19.01**	**12.02**	**53.46**	**19.18**	**3.36**
C0470-055-1500-M	**0.470**	**11.94**	**0.055**	**1.40**	**1.500**	**38.10**	**0.747**	**18.98**	**0.645**	**16.38**	**15.11**	**67.22**	**20.07**	**3.51**	**C0470-055-1500-S**	**0.812**	**20.61**	**12.02**	**53.46**	**17.46**	**3.05**
C0470-055-1625-M	**0.470**	**11.94**	**0.055**	**1.40**	**1.625**	**41.28**	**0.804**	**20.43**	**0.693**	**17.59**	**15.11**	**67.22**	**18.42**	**3.22**	**C0470-055-1625-S**	**0.875**	**22.22**	**12.02**	**53.46**	**16.02**	**2.80**
C0470-055-1750-M	**0.470**	**11.94**	**0.055**	**1.40**	**1.750**	**44.45**	**0.862**	**21.89**	**0.740**	**18.80**	**15.11**	**67.22**	**17.01**	**2.98**	**C0470-055-1750-S**	**0.938**	**23.82**	**12.02**	**53.46**	**14.79**	**2.59**
C0470-055-1875-M	**0.470**	**11.94**	**0.055**	**1.40**	**1.875**	**47.63**	**0.919**	**23.34**	**0.788**	**20.01**	**15.11**	**67.22**	**15.81**	**2.77**	**C0470-055-1875-S**	**1.001**	**25.42**	**12.02**	**53.46**	**13.75**	**2.41**
C0470-055-2000-M	**0.470**	**11.94**	**0.055**	**1.40**	**2.000**	**50.80**	**0.976**	**24.80**	**0.835**	**21.22**	**15.11**	**67.22**	**14.76**	**2.58**	**C0470-055-2000-S**	**1.064**	**27.02**	**12.02**	**53.46**	**12.84**	**2.25**
C0470-055-2125-M	**0.470**	**11.94**	**0.055**	**1.40**	**2.125**	**53.98**	**1.034**	**26.25**	**0.883**	**22.43**	**15.11**	**67.22**	**13.85**	**2.42**	**C0470-055-2125-S**	**1.127**	**28.62**	**12.02**	**53.46**	**12.04**	**2.11**
C0470-055-2250-M	**0.470**	**11.94**	**0.055**	**1.40**	**2.250**	**57.15**	**1.091**	**27.71**	**0.931**	**23.64**	**15.11**	**67.22**	**13.04**	**2.28**	**C0470-055-2250-S**	**1.190**	**30.23**	**12.02**	**53.46**	**11.34**	**1.98**
C0470-055-2375-M	**0.470**	**11.94**	**0.055**	**1.40**	**2.375**	**60.33**	**1.148**	**29.16**	**0.978**	**24.85**	**15.11**	**67.22**	**12.32**	**2.16**	**C0470-055-2375-S**	**1.253**	**31.83**	**12.02**	**53.46**	**10.71**	**1.87**
C0470-055-2500-M	**0.470**	**11.94**	**0.055**	**1.40**	**2.500**	**63.50**	**1.205**	**30.62**	**1.026**	**26.06**	**15.11**	**67.22**	**11.67**	**2.04**	**C0470-055-2500-S**	**1.316**	**33.43**	**12.02**	**53.46**	**10.15**	**1.78**
C0470-055-2625-M	**0.470**	**11.94**	**0.055**	**1.40**	**2.625**	**66.68**	**1.263**	**32.07**	**1.074**	**27.27**	**15.11**	**67.22**	**11.09**	**1.94**	**C0470-055-2625-S**	**1.379**	**35.03**	**12.02**	**53.46**	**9.65**	**1.69**
C0470-055-2750-M	**0.470**	**11.94**	**0.055**	**1.40**	**2.750**	**69.85**	**1.320**	**33.53**	**1.121**	**28.48**	**15.11**	**67.22**	**10.57**	**1.85**	**C0470-055-2750-S**	**1.442**	**36.64**	**12.02**	**53.46**	**9.19**	**1.61**
C0470-055-2875-M	**0.470**	**11.94**	**0.055**	**1.40**	**2.875**	**73.03**	**1.377**	**34.99**	**1.169**	**29.69**	**15.11**	**67.22**	**10.09**	**1.77**	**C0470-055-2875-S**	**1.505**	**38.24**	**12.02**	**53.46**	**8.78**	**1.54**
C0470-055-3000-M	**0.470**	**11.94**	**0.055**	**1.40**	**3.000**	**76.20**	**1.435**	**36.44**	**1.216**	**30.90**	**15.11**	**67.22**	**9.66**	**1.69**	**C0470-055-3000-S**	**1.569**	**39.84**	**12.02**	**53.46**	**8.40**	**1.47**
C0470-055-3250-M	**0.470**	**11.94**	**0.055**	**1.40**	**3.250**	**82.55**	**1.549**	**39.35**	**1.312**	**33.31**	**15.11**	**67.22**	**8.89**	**1.56**	**C0470-055-3250-S**	**1.695**	**43.05**	**12.02**	**53.46**	**7.73**	**1.35**
C0470-055-3500-M	**0.470**	**11.94**	**0.055**	**1.40**	**3.500**	**88.90**	**1.664**	**42.26**	**1.407**	**35.73**	**15.11**	**67.22**	**8.23**	**1.44**	**C0470-055-3500-S**	**1.821**	**46.25**	**12.02**	**53.46**	**7.16**	**1.25**
C0470-055-3750-M	**0.470**	**11.94**	**0.055**	**1.40**	**3.750**	**95.25**	**1.778**	**45.17**	**1.502**	**38.15**	**15.11**	**67.22**	**7.67**	**1.34**	**C0470-055-3750-S**	**1.947**	**49.46**	**12.02**	**53.46**	**6.67**	**1.17**
C0470-055-4000-M	**0.470**	**11.94**	**0.055**	**1.40**	**4.000**	**101.60**	**1.893**	**48.08**	**1.597**	**40.57**	**15.11**	**67.22**	**7.17**	**1.26**	**C0470-055-4000-S**	**2.073**	**52.66**	**12.02**	**53.46**	**6.24**	**1.09**
C0470-055-4250-M	**0.470**	**11.94**	**0.055**	**1.40**	**4.250**	**107.95**	**2.008**	**50.99**	**1.693**	**42.99**	**15.11**	**67.22**	**6.74**	**1.18**	**C0470-055-4250-S**	**2.199**	**55.87**	**12.02**	**53.46**	**5.86**	**1.03**
C0470-055-4500-M	**0.470**	**11.94**	**0.055**	**1.40**	**4.500**	**114.30**	**2.122**	**53.90**	**1.788**	**45.41**	**15.11**	**67.22**	**6.36**	**1.11**	**C0470-055-4500-S**	**2.326**	**59.07**	**12.02**	**53.46**	**5.53**	**0.97**
C0470-055-4750-M	**0.470**	**11.94**	**0.055**	**1.40**	**4.750**	**120.65**	**2.237**	**56.81**	**1.883**	**47.83**	**15.11**	**67.22**	**6.01**	**1.05**	**C0470-055-4750-S**	**2.452**	**62.28**	**12.02**	**53.46**	**5.23**	**0.92**
C0470-055-5000-M	**0.470**	**11.94**	**0.055**	**1.40**	**5.000**	**127.00**	**2.351**	**59.73**	**1.978**	**50.25**	**15.11**	**67.22**	**5.71**	**1.00**	**C0470-055-5000-S**	**2.578**	**65.48**	**12.02**	**53.46**	**4.96**	**0.87**
C0470-055-5250-M	**0.470**	**11.94**	**0.055**	**1.40**	**5.250**	**133.35**	**2.466**	**62.64**	**2.073**	**52.66**	**15.11**	**67.22**	**5.43**	**0.95**	**C0470-055-5250-S**	**2.704**	**68.68**	**12.02**	**53.46**	**4.72**	**0.83**
C0470-055-5500-M	**0.470**	**11.94**	**0.055**	**1.40**	**5.500**	**139.70**	**2.581**	**65.55**	**2.169**	**55.08**	**15.11**	**67.22**	**5.18**	**0.91**	**C0470-055-5500-S**	**2.830**	**71.89**	**12.02**	**53.46**	**4.50**	**0.79**
C0470-055-5750-M	**0.470**	**11.94**	**0.055**	**1.40**	**5.750**	**146.05**	**2.695**	**68.46**	**2.264**	**57.50**	**15.11**	**67.22**	**4.95**	**0.87**	**C0470-055-5750-S**	**2.956**	**75.09**	**12.02**	**53.46**	**4.30**	**0.75**
C0470-055-6000-M	**0.470**	**11.94**	**0.055**	**1.40**	**6.000**	**152.40**	**2.810**	**71.37**	**2.359**	**59.92**	**15.11**	**67.22**	**4.74**	**0.83**	**C0470-055-6000-S**	**3.083**	**78.30**	**12.02**	**53.46**	**4.12**	**0.72**
C0470-055-6250-M	**0.470**	**11.94**	**0.055**	**1.40**	**6.250**	**158.75**	**2.924**	**74.28**	**2.454**	**62.34**	**15.11**	**67.22**	**4.54**	**0.80**	**C0470-055-6250-S**	**3.209**	**81.50**	**12.02**	**53.46**	**3.95**	**0.69**
C0470-055-6500-M	**0.470**	**11.94**	**0.055**	**1.40**	**6.500**	**165.10**	**3.039**	**77.19**	**2.550**	**64.76**	**15.11**	**67.22**	**4.37**	**0.76**	**C0470-055-6500-S**	**3.335**	**84.71**	**12.02**	**53.46**	**3.80**	**0.66**
C0470-055-6750-M	**0.470**	**11.94**	**0.055**	**1.40**	**6.750**	**171.45**	**3.154**	**80.10**	**2.645**	**67.18**	**15.11**	**67.22**	**4.20**	**0.74**	**C0470-055-6750-S**	**3.461**	**87.91**	**12.02**	**53.46**	**3.65**	**0.64**
C0470-055-7000-M	**0.470**	**11.94**	**0.055**	**1.40**	**7.000**	**177.80**	**3.268**	**83.01**	**2.740**	**69.60**	**15.11**	**67.22**	**4.05**	**0.71**	**C0470-055-7000-S**	**3.587**	**91.12**	**12.02**	**53.46**	**3.52**	**0.62**
C0470-055-7500-M	**0.470**	**11.94**	**0.055**	**1.40**	**7.500**	**190.50**	**3.497**	**88.83**	**2.930**	**74.43**	**15.11**	**67.22**	**3.78**	**0.66**	**C0470-055-7500-S**	**3.840**	**97.53**	**12.02**	**53.46**	**3.28**	**0.57**
C0470-055-8000-M	**0.470**	**11.94**	**0.055**	**1.40**	**8.000**	**203.20**	**3.726**	**94.65**	**3.121**	**79.27**	**15.11**	**67.22**	**3.54**	**0.62**	**C0470-055-8000-S**	**4.092**	**103.94**	**12.02**	**53.46**	**3.08**	**0.54**
C0470-059-0750-M	**0.470**	**11.94**	**0.059**	**1.50**	**0.750**	**19.05**	**0.431**	**10.96**	**0.394**	**10.01**	**18.34**	**81.58**	**57.56**	**10.07**	**C0470-059-0750-S**	**0.459**	**11.66**	**14.57**	**64.81**	**50.06**	**8.76**
C0470-059-0813-M	**0.470**	**11.94**	**0.059**	**1.50**	**0.813**	**20.64**	**0.462**	**11.74**	**0.421**	**10.68**	**18.34**	**81.58**	**52.38**	**9.17**	**C0470-059-0813-S**	**0.493**	**12.51**	**14.57**	**64.81**	**45.55**	**7.97**
C0470-059-0875-M	**0.470**	**11.94**	**0.059**	**1.50**	**0.875**	**22.23**	**0.493**	**12.53**	**0.447**	**11.36**	**18.34**	**81.58**	**48.06**	**8.41**	**C0470-059-0875-S**	**0.526**	**13.37**	**14.57**	**64.81**	**41.79**	**7.31**
C0470-059-0938-M	**0.470**	**11.94**	**0.059**	**1.50**	**0.938**	**23.81**	**0.524**	**13.32**	**0.474**	**12.04**	**18.34**	**81.58**	**44.39**	**7.77**	**C0470-059-0938-S**	**0.560**	**14.23**	**14.57**	**64.81**	**38.60**	**6.76**
C0470-059-1000-M	**0.470**	**11.94**	**0.059**	**1.50**	**1.000**	**25.40**	**0.555**	**14.11**	**0.501**	**12.72**	**18.34**	**81.58**	**41.25**	**7.22**	**C0470-059-1000-S**	**0.594**	**15.08**	**14.57**	**64.81**	**35.87**	**6.28**
C0470-059-1125-M	**0.470**	**11.94**	**0.059**	**1.50**	**1.125**	**28.58**	**0.617**	**15.68**	**0.554**	**14.07**	**18.34**	**81.58**	**36.13**	**6.32**	**C0470-059-1125-S**	**0.661**	**16.79**	**14.57**	**64.81**	**31.42**	**5.50**
C0470-059-1250-M	**0.470**	**11.94**	**0.059**	**1.50**	**1.250**	**31.75**	**0.679**	**17.25**	**0.608**	**15.43**	**18.34**	**81.58**	**32.14**	**5.62**	**C0470-059-1250-S**	**0.729**	**18.51**	**14.57**	**64.81**	**27.95**	**4.89**
C0470-059-1375-M	**0.470**	**11.94**	**0.059**	**1.50**	**1.375**	**34.93**	**0.741**	**18.83**	**0.661**	**16.79**	**18.34**	**81.58**	**28.94**	**5.06**	**C0470-059-1375-S**	**0.796**	**20.22**	**14.57**	**64.81**	**25.17**	**4.40**
C0470-059-1500-M	**0.470**	**11.94**	**0.059**	**1.50**	**1.500**	**38.10**	**0.803**	**20.40**	**0.714**	**18.14**	**18.34**	**81.58**	**26.32**	**4.61**	**C0470-059-1500-S**	**0.864**	**21.93**	**14.57**	**64.81**	**22.89**	**4.01**
C0470-059-1625-M	**0.470**	**11.94**	**0.059**	**1.50**	**1.625**	**41.28**	**0.865**	**21.98**	**0.768**	**19.50**	**18.34**	**81.58**	**24.14**	**4.22**	**C0470-059-1625-S**	**0.931**	**23.65**	**14.57**	**64.81**	**20.99**	**3.67**
C0470-059-1750-M	**0.470**	**11.94**	**0.059**	**1.50**	**1.750**	**44.45**	**0.927**	**23.55**	**0.821**	**20.86**	**18.34**	**81.58**	**22.29**	**3.90**	**C0470-059-1750-S**	**0.998**	**25.36**	**14.57**	**64.81**	**19.38**	**3.39**
C0470-059-1875-M	**0.470**	**11.94**	**0.059**	**1.50**	**1.875**	**47.63**	**0.989**	**25.13**	**0.875**	**22.21**	**18.34**	**81.58**	**20.71**	**3.62**	**C0470-059-1875-S**	**1.066**	**27.07**	**14.57**	**64.81**	**18.01**	**3.15**
C0470-059-2000-M	**0.470**	**11.94**	**0.059**	**1.50**	**2.000**	**50.80**	**1.051**	**26.70**	**0.928**	**23.57**	**18.34**	**81.58**	**19.33**	**3.38**	**C0470-059-2000-S**	**1.133**	**28.78**	**14.57**	**64.81**	**16.81**	**2.94**
C0470-059-2125-M	**0.470**	**11.94**	**0.059**	**1.50**	**2.125**	**53.98**	**1.113**	**28.27**	**0.981**	**24.93**	**18.34**	**81.58**	**18.13**	**3.17**	**C0470-059-2125-S**	**1.201**	**30.50**	**14.57**	**64.81**	**15.76**	**2.76**
C0470-059-2250-M	**0.470**	**11.94**	**0.059**	**1.50**	**2.250**	**57.15**	**1.175**	**29.85**	**1.035**	**26.28**	**18.34**	**81.58**	**17.06**	**2.99**	**C0470-059-2250-S**	**1.268**	**32.21**	**14.57**	**64.81**	**14.84**	**2.60**
C0470-059-2375-M	**0.470**	**11.94**	**0.059**	**1.50**	**2.375**	**60.33**	**1.237**	**31.42**	**1.088**	**27.64**	**18.34**	**81.58**	**16.12**	**2.82**	**C0470-059-2375-S**	**1.336**	**33.92**	**14.57**	**64.81**	**14.02**	**2.45**
C0470-059-2500-M	**0.470**	**11.94**	**0.059**	**1.50**	**2.500**	**63.50**	**1.299**	**33.00**	**1.142**	**29.00**	**18.34**	**81.58**	**15.27**	**2.67**	**C0470-059-2500-S**	**1.403**	**35.63**	**14.57**	**64.81**	**13.28**	**2.32**
C0470-059-2625-M	**0.470**	**11.94**	**0.059**	**1.50**	**2.625**	**66.68**	**1.361**	**34.57**	**1.195**	**30.35**	**18.34**	**81.58**	**14.51**	**2.54**	**C0470-059-2625-S**	**1.470**	**37.35**	**14.57**	**64.81**	**12.62**	**2.21**
C0470-059-2750-M	**0.470**	**11.94**	**0.059**	**1.50**	**2.750**	**69.85**	**1.423**	**36.15**	**1.248**	**31.71**	**18.34**	**81.58**	**13.82**	**2.42**	**C0470-059-2750-S**	**1.538**	**39.06**	**14.57**	**64.81**	**12.02**	**2.10**

FOR INFORMATION ON ALTERNATIVE FINISHES, SEE PAGE 311

Part Numbers with an "*" are squared and not ground. **Part Numbers in bold** represent the newly expanded Associated Spring RAYMOND compression spring offering.

(OD) 0.470 - 0.470

MUSIC WIRE															STAINLESS STEEL						
Catalog #	Outside Diameter (OD)		Wire Diameter (d)		Free Length (L) Approx		Load Length (L_1)		Solid Height (Sh) Approx		Load (P) at L_1		Spring Rate (R)		Catalog #	Load Length (L_1)		Load (P) at L_1		Spring Rate (R)	
	in	mm	in	mm	in	mm	in	mm	in	mm	lb	N	lb/in	N/mm		in	mm	lb	N	lb/in	N/mm
C0470-059-2875-M	0.470	11.94	0.059	1.50	2.875	73.03	1.485	37.72	1.302	33.07	18.34	81.58	13.20	2.31	C0470-059-2875-S	1.605	40.77	14.57	64.81	11.47	2.01
C0470-059-3000-M	0.470	11.94	0.059	1.50	3.000	76.20	1.547	39.30	1.355	34.42	18.34	81.58	12.62	2.21	C0470-059-3000-S	1.673	42.49	14.57	64.81	10.98	1.92
C0470-059-3250-M	0.470	11.94	0.059	1.50	3.250	82.55	1.671	42.44	1.462	37.13	18.34	81.58	11.62	2.03	C0470-059-3250-S	1.808	45.91	14.57	64.81	10.10	1.77
C0470-059-3500-M	0.470	11.94	0.059	1.50	3.500	88.90	1.795	45.59	1.569	39.85	18.34	81.58	10.76	1.88	C0470-059-3500-S	1.942	49.34	14.57	64.81	9.35	1.64
C0470-059-3750-M	0.470	11.94	0.059	1.50	3.750	95.25	1.919	48.74	1.676	42.56	18.34	81.58	10.02	1.75	C0470-059-3750-S	2.077	52.76	14.57	64.81	8.71	1.52
C0470-059-4000-M	0.470	11.94	0.059	1.50	4.000	101.60	2.043	51.89	1.782	45.27	18.34	81.58	9.37	1.64	C0470-059-4000-S	2.212	56.19	14.57	64.81	8.15	1.43
C0470-059-4250-M	0.470	11.94	0.059	1.50	4.250	107.95	2.167	55.04	1.889	47.99	18.34	81.58	8.80	1.54	C0470-059-4250-S	2.347	59.61	14.57	64.81	7.66	1.34
C0470-059-4500-M	0.470	11.94	0.059	1.50	4.500	114.30	2.291	58.19	1.996	50.70	18.34	81.58	8.30	1.45	C0470-059-4500-S	2.482	63.04	14.57	64.81	7.22	1.26
C0470-059-4750-M	0.470	11.94	0.059	1.50	4.750	120.65	2.415	61.34	2.103	53.41	18.34	81.58	7.85	1.37	C0470-059-4750-S	2.617	66.46	14.57	64.81	6.83	1.20
C0470-059-5000-M	0.470	11.94	0.059	1.50	5.000	127.00	2.539	64.49	2.210	56.13	18.34	81.58	7.45	1.30	C0470-059-5000-S	2.752	69.89	14.57	64.81	6.48	1.13
C0470-059-5250-M	0.470	11.94	0.059	1.50	5.250	133.35	2.663	67.63	2.316	58.84	18.34	81.58	7.09	1.24	C0470-059-5250-S	2.886	73.31	14.57	64.81	6.16	1.08
C0470-059-5500-M	0.470	11.94	0.059	1.50	5.500	139.70	2.787	70.78	2.423	61.55	18.34	81.58	6.76	1.18	C0470-059-5500-S	3.021	76.74	14.57	64.81	5.88	1.03
C0470-059-5750-M	0.470	11.94	0.059	1.50	5.750	146.05	2.911	73.93	2.530	64.26	18.34	81.58	6.46	1.13	C0470-059-5750-S	3.156	80.17	14.57	64.81	5.62	0.98
C0470-059-6000-M	0.470	11.94	0.059	1.50	6.000	152.40	3.035	77.08	2.637	66.98	18.34	81.58	6.19	1.08	C0470-059-6000-S	3.291	83.59	14.57	64.81	5.38	0.94
C0470-059-6250-M	0.470	11.94	0.059	1.50	6.250	158.75	3.159	80.23	2.744	69.69	18.34	81.58	5.93	1.04	C0470-059-6250-S	3.426	87.02	14.57	64.81	5.16	0.90
C0470-059-6500-M	0.470	11.94	0.059	1.50	6.500	165.10	3.283	83.38	2.851	72.40	18.34	81.58	5.70	1.00	C0470-059-6500-S	3.561	90.44	14.57	64.81	4.96	0.87
C0470-059-6750-M	0.470	11.94	0.059	1.50	6.750	171.45	3.407	86.53	2.957	75.12	18.34	81.58	5.49	0.96	C0470-059-6750-S	3.696	93.87	14.57	64.81	4.77	0.83
C0470-059-7000-M	0.470	11.94	0.059	1.50	7.000	177.80	3.530	89.67	3.064	77.83	18.34	81.58	5.29	0.93	C0470-059-7000-S	3.830	97.29	14.57	64.81	4.60	0.80
C0470-059-7500-M	0.470	11.94	0.059	1.50	7.500	190.50	3.778	95.97	3.278	83.26	18.34	81.58	4.93	0.86	C0470-059-7500-S	4.100	104.14	14.57	64.81	4.29	0.75
C0470-059-8000-M	0.470	11.94	0.059	1.50	8.000	203.20	4.026	102.27	3.491	88.68	18.34	81.58	4.62	0.81	C0470-059-8000-S	4.370	110.99	14.57	64.81	4.01	0.70
C0470-063-0688-M	0.470	11.94	0.063	1.60	0.688	17.46	0.425	10.80	0.398	10.10	21.96	97.70	83.70	14.65	C0470-063-0688-S	0.448	11.38	17.43	77.51	72.79	12.74
C0470-063-0750-M	0.470	11.94	0.063	1.60	0.750	19.05	0.458	11.64	0.427	10.85	21.96	97.70	75.32	13.18	C0470-063-0750-S	0.484	12.29	17.43	77.51	65.50	11.46
C0470-063-0813-M	0.470	11.94	0.063	1.60	0.813	20.64	0.492	12.49	0.457	11.60	21.96	97.70	68.46	11.98	C0470-063-0813-S	0.520	13.20	17.43	77.51	59.53	10.42
C0470-063-0875-M	0.470	11.94	0.063	1.60	0.875	22.23	0.525	13.33	0.486	12.35	21.96	97.70	62.75	10.98	C0470-063-0875-S	0.556	14.11	17.43	77.51	54.57	9.55
C0470-063-0938-M	0.470	11.94	0.063	1.60	0.938	23.81	0.558	14.18	0.516	13.10	21.96	97.70	57.92	10.14	C0470-063-0938-S	0.592	15.02	17.43	77.51	50.36	8.81
C0470-063-1000-M	0.470	11.94	0.063	1.60	1.000	25.40	0.592	15.03	0.545	13.85	21.96	97.70	53.78	9.41	C0470-063-1000-S	0.627	15.94	17.43	77.51	46.76	8.18
C0470-063-1125-M	0.470	11.94	0.063	1.60	1.125	28.58	0.658	16.72	0.605	15.36	21.96	97.70	47.05	8.23	C0470-063-1125-S	0.699	17.76	17.43	77.51	40.91	7.16
C0470-063-1250-M	0.470	11.94	0.063	1.60	1.250	31.75	0.725	18.41	0.664	16.86	21.96	97.70	41.82	7.32	C0470-063-1250-S	0.771	19.58	17.43	77.51	36.36	6.36
C0470-063-1375-M	0.470	11.94	0.063	1.60	1.375	34.93	0.791	20.10	0.723	18.36	21.96	97.70	37.63	6.59	C0470-063-1375-S	0.842	21.40	17.43	77.51	32.72	5.73
C0470-063-1500-M	0.470	11.94	0.063	1.60	1.500	38.10	0.858	21.79	0.782	19.86	21.96	97.70	34.21	5.99	C0470-063-1500-S	0.914	23.22	17.43	77.51	29.75	5.21
C0470-063-1625-M	0.470	11.94	0.063	1.60	1.625	41.28	0.925	23.48	0.841	21.36	21.96	97.70	31.35	5.49	C0470-063-1625-S	0.986	25.04	17.43	77.51	27.27	4.77
C0470-063-1750-M	0.470	11.94	0.063	1.60	1.750	44.45	0.991	25.17	0.900	22.86	21.96	97.70	28.94	5.06	C0470-063-1750-S	1.058	26.86	17.43	77.51	25.17	4.40
C0470-063-1875-M	0.470	11.94	0.063	1.60	1.875	47.63	1.058	26.87	0.959	24.36	21.96	97.70	26.87	4.70	C0470-063-1875-S	1.129	28.68	17.43	77.51	23.37	4.09
C0470-063-2000-M	0.470	11.94	0.063	1.60	2.000	50.80	1.124	28.56	1.018	25.86	21.96	97.70	25.08	4.39	C0470-063-2000-S	1.201	30.51	17.43	77.51	21.81	3.82
C0470-063-2125-M	0.470	11.94	0.063	1.60	2.125	53.98	1.191	30.25	1.077	27.36	21.96	97.70	23.51	4.11	C0470-063-2125-S	1.273	32.33	17.43	77.51	20.45	3.58
C0470-063-2250-M	0.470	11.94	0.063	1.60	2.250	57.15	1.257	31.94	1.136	28.86	21.96	97.70	22.13	3.87	C0470-063-2250-S	1.344	34.15	17.43	77.51	19.24	3.37
C0470-063-2375-M	0.470	11.94	0.063	1.60	2.375	60.33	1.324	33.63	1.195	30.37	21.96	97.70	20.90	3.66	C0470-063-2375-S	1.416	35.97	17.43	77.51	18.17	3.18
C0470-063-2500-M	0.470	11.94	0.063	1.60	2.500	63.50	1.391	35.32	1.255	31.87	21.96	97.70	19.80	3.46	C0470-063-2500-S	1.488	37.79	17.43	77.51	17.22	3.01
C0470-063-2625-M	0.470	11.94	0.063	1.60	2.625	66.68	1.457	37.01	1.314	33.37	21.96	97.70	18.81	3.29	C0470-063-2625-S	1.560	39.61	17.43	77.51	16.35	2.86
C0470-063-2750-M	0.470	11.94	0.063	1.60	2.750	69.85	1.524	38.70	1.373	34.87	21.96	97.70	17.91	3.13	C0470-063-2750-S	1.631	41.43	17.43	77.51	15.58	2.73
C0470-063-2875-M	0.470	11.94	0.063	1.60	2.875	73.03	1.590	40.40	1.432	36.37	21.96	97.70	17.10	2.99	C0470-063-2875-S	1.703	43.25	17.43	77.51	14.87	2.60
C0470-063-3000-M	0.470	11.94	0.063	1.60	3.000	76.20	1.657	42.09	1.491	37.87	21.96	97.70	16.35	2.86	C0470-063-3000-S	1.775	45.08	17.43	77.51	14.22	2.49
C0470-063-3250-M	0.470	11.94	0.063	1.60	3.250	82.55	1.790	45.47	1.609	40.87	21.96	97.70	15.05	2.63	C0470-063-3250-S	1.918	48.72	17.43	77.51	13.08	2.29
C0470-063-3500-M	0.470	11.94	0.063	1.60	3.500	88.90	1.923	48.85	1.727	43.87	21.96	97.70	13.93	2.44	C0470-063-3500-S	2.061	52.36	17.43	77.51	12.11	2.12
C0470-063-3750-M	0.470	11.94	0.063	1.60	3.750	95.25	2.056	52.23	1.845	46.88	21.96	97.70	12.97	2.27	C0470-063-3750-S	2.205	56.00	17.43	77.51	11.28	1.97
C0470-063-4000-M	0.470	11.94	0.063	1.60	4.000	101.60	2.190	55.62	1.964	49.88	21.96	97.70	12.13	2.12	C0470-063-4000-S	2.348	59.65	17.43	77.51	10.55	1.85
C0470-063-4250-M	0.470	11.94	0.063	1.60	4.250	107.95	2.323	59.00	2.082	52.88	21.96	97.70	11.40	1.99	C0470-063-4250-S	2.492	63.29	17.43	77.51	9.91	1.73
C0470-063-4500-M	0.470	11.94	0.063	1.60	4.500	114.30	2.456	62.38	2.200	55.88	21.96	97.70	10.75	1.88	C0470-063-4500-S	2.635	66.93	17.43	77.51	9.34	1.64
C0470-063-4750-M	0.470	11.94	0.063	1.60	4.750	120.65	2.589	65.76	2.318	58.88	21.96	97.70	10.16	1.78	C0470-063-4750-S	2.779	70.57	17.43	77.51	8.84	1.55
C0470-063-5000-M	0.470	11.94	0.063	1.60	5.000	127.00	2.722	69.15	2.436	61.89	21.96	97.70	9.64	1.69	C0470-063-5000-S	2.922	74.22	17.43	77.51	8.39	1.47
C0470-063-5250-M	0.470	11.94	0.063	1.60	5.250	133.35	2.856	72.53	2.555	64.89	21.96	97.70	9.17	1.61	C0470-063-5250-S	3.065	77.86	17.43	77.51	7.98	1.40
C0470-063-5500-M	0.470	11.94	0.063	1.60	5.500	139.70	2.989	75.91	2.673	67.89	21.96	97.70	8.75	1.53	C0470-063-5500-S	3.209	81.50	17.43	77.51	7.61	1.33
C0470-063-5750-M	0.470	11.94	0.063	1.60	5.750	146.05	3.122	79.30	2.791	70.89	21.96	97.70	8.36	1.46	C0470-063-5750-S	3.352	85.14	17.43	77.51	7.27	1.27
C0470-063-6000-M	0.470	11.94	0.063	1.60	6.000	152.40	3.255	82.68	2.909	73.89	21.96	97.70	8.00	1.40	C0470-063-6000-S	3.496	88.79	17.43	77.51	6.96	1.22
C0470-063-6250-M	0.470	11.94	0.063	1.60	6.250	158.75	3.388	86.06	3.027	76.89	21.96	97.70	7.68	1.34	C0470-063-6250-S	3.639	92.43	17.43	77.51	6.67	1.17
C0470-063-6500-M	0.470	11.94	0.063	1.60	6.500	165.10	3.521	89.44	3.146	79.90	21.96	97.70	7.37	1.29	C0470-063-6500-S	3.782	96.07	17.43	77.51	6.41	1.12
C0470-063-6750-M	0.470	11.94	0.063	1.60	6.750	171.45	3.655	92.83	3.264	82.90	21.96	97.70	7.10	1.24	C0470-063-6750-S	3.926	99.72	17.43	77.51	6.17	1.08
C0470-063-7000-M	0.470	11.94	0.063	1.60	7.000	177.80	3.788	96.21	3.382	85.90	21.96	97.70	6.84	1.20	C0470-063-7000-S	4.069	103.36	17.43	77.51	5.95	1.04
C0470-063-7500-M	0.470	11.94	0.063	1.60	7.500	190.50	4.054	102.97	3.618	91.90	21.96	97.70	6.37	1.12	C0470-063-7500-S	4.356	110.64	17.43	77.51	5.54	0.97
C0470-063-8000-M	0.470	11.94	0.063	1.60	8.000	203.20	4.320	109.74	3.855	97.91	21.96	97.70	5.97	1.04	C0470-063-8000-S	4.643	117.93	17.43	77.51	5.19	0.91
C0470-068-0688-M	0.470	11.94	0.068	1.73	0.688	17.46	0.454	11.54	0.434	11.02	27.07	120.41	116.08	20.31	C0470-068-0688-S	0.475	12.07	21.43	95.34	100.94	17.66
C0470-068-0750-M	0.470	11.94	0.068	1.73	0.750	19.05	0.490	12.46	0.467	11.86	27.07	120.41	104.26	18.25	C0470-068-0750-S	0.514	13.05	21.43	95.34	90.66	15.87
C0470-068-0813-M	0.470	11.94	0.068	1.73	0.813	20.64	0.526	13.37	0.500	12.69	27.07	120.41	94.63	16.56	C0470-068-0813-S	0.552	14.02	21.43	95.34	82.29	14.40
C0470-068-0875-M	0.470	11.94	0.068	1.73	0.875	22.23	0.563	14.29	0.533	13.53	27.07	120.41	86.63	15.16	C0470-068-0875-S	0.590	15.00	21.43	95.34	75.33	13.18

Part Numbers with an "*" are squared and not ground. **Part Numbers in bold** represent the newly expanded Associated Spring RAYMOND compression spring offering.

MUSIC WIRE															STAINLESS STEEL					
Catalog #	Outside Diameter (OD)		Wire Diameter (d)		Free Length (L) Approx		Load Length (L_1)		Solid Height (Sh) Approx		Load (P) at L_1		Spring Rate (R)		Catalog #	Load Length (L_1)		Load (P) at L_1		Spring Rate (R)	
	in	mm	in	mm	in	mm	in	mm	in	mm	lb	N	lb/in	N/mm		in	mm	lb	N	lb/in	N/mm
C0470-068-0938-M	0.470	11.94	0.068	1.73	0.938	23.81	0.599	15.20	0.566	14.37	27.07	120.41	79.87	13.98	**C0470-068-0938-S**	0.629	15.97	21.43	95.34	69.45	12.15
C0470-068-1000-M	0.470	11.94	0.068	1.73	1.000	25.40	0.635	16.12	0.599	15.21	27.07	120.41	74.10	12.97	**C0470-068-1000-S**	0.667	16.95	21.43	95.34	64.43	11.28
C0470-068-1125-M	0.470	11.94	0.068	1.73	1.125	28.58	0.707	17.95	0.665	16.88	27.07	120.41	64.73	11.33	**C0470-068-1125-S**	0.744	18.90	21.43	95.34	56.29	9.85
C0470-068-1250-M	0.470	11.94	0.068	1.73	1.250	31.75	0.779	19.79	0.731	18.56	27.07	120.41	57.47	10.06	**C0470-068-1250-S**	0.821	20.86	21.43	95.34	49.97	8.74
C0470-068-1375-M	0.470	11.94	0.068	1.73	1.375	34.93	0.851	21.62	0.797	20.23	27.07	120.41	51.67	9.04	**C0470-068-1375-S**	0.898	22.81	21.43	95.34	44.93	7.86
C0470-068-1500-M	0.470	11.94	0.068	1.73	1.500	38.10	0.923	23.45	0.863	21.91	27.07	120.41	46.93	8.21	**C0470-068-1500-S**	0.975	24.76	21.43	95.34	40.81	7.14
C0470-068-1625-M	0.470	11.94	0.068	1.73	1.625	41.28	0.995	25.28	0.929	23.58	27.07	120.41	42.99	7.52	**C0470-068-1625-S**	1.052	26.71	21.43	95.34	37.39	6.54
C0470-068-1750-M	0.470	11.94	0.068	1.73	1.750	44.45	1.068	27.12	0.994	25.26	27.07	120.41	39.66	6.94	**C0470-068-1750-S**	1.129	28.67	21.43	95.34	34.49	6.04
C0470-068-1875-M	0.470	11.94	0.068	1.73	1.875	47.63	1.140	28.95	1.060	26.93	27.07	120.41	36.81	6.44	**C0470-068-1875-S**	1.205	30.62	21.43	95.34	32.01	5.60
C0470-068-2000-M	0.470	11.94	0.068	1.73	2.000	50.80	1.212	30.78	1.126	28.61	27.07	120.41	34.34	6.01	**C0470-068-2000-S**	1.282	32.57	21.43	95.34	29.87	5.23
C0470-068-2125-M	0.470	11.94	0.068	1.73	2.125	53.98	1.284	32.61	1.192	30.29	27.07	120.41	32.19	5.63	**C0470-068-2125-S**	1.359	34.52	21.43	95.34	27.99	4.90
C0470-068-2250-M	0.470	11.94	0.068	1.73	2.250	57.15	1.356	34.45	1.258	31.96	27.07	120.41	30.28	5.30	**C0470-068-2250-S**	1.436	36.48	21.43	95.34	26.33	4.61
C0470-068-2375-M	0.470	11.94	0.068	1.73	2.375	60.33	1.428	36.28	1.324	33.64	27.07	120.41	28.59	5.00	**C0470-068-2375-S**	1.513	38.43	21.43	95.34	24.86	4.35
C0470-068-2500-M	0.470	11.94	0.068	1.73	2.500	63.50	1.500	38.11	1.390	35.31	27.07	120.41	27.08	4.74	**C0470-068-2500-S**	1.590	40.38	21.43	95.34	23.55	4.12
C0470-068-2625-M	0.470	11.94	0.068	1.73	2.625	66.68	1.573	39.94	1.456	36.99	27.07	120.41	25.72	4.50	**C0470-068-2625-S**	1.667	42.33	21.43	95.34	22.37	3.91
C0470-068-2750-M	0.470	11.94	0.068	1.73	2.750	69.85	1.645	41.78	1.522	38.66	27.07	120.41	24.49	4.29	**C0470-068-2750-S**	1.744	44.29	21.43	95.34	21.30	3.73
C0470-068-2875-M	0.470	11.94	0.068	1.73	2.875	73.03	1.717	43.61	1.588	40.34	27.07	120.41	23.37	4.09	**C0470-068-2875-S**	1.820	46.24	21.43	95.34	20.32	3.56
C0470-068-3000-M	0.470	11.94	0.068	1.73	3.000	76.20	1.789	45.44	1.654	42.01	27.07	120.41	22.35	3.91	**C0470-068-3000-S**	1.897	48.19	21.43	95.34	19.44	3.40
C0470-068-3250-M	0.470	11.94	0.068	1.73	3.250	82.55	1.933	49.11	1.786	45.36	27.07	120.41	20.56	3.60	**C0470-068-3250-S**	2.051	52.10	21.43	95.34	17.88	3.13
C0470-068-3500-M	0.470	11.94	0.068	1.73	3.500	88.90	2.078	52.77	1.918	48.71	27.07	120.41	19.03	3.33	**C0470-068-3500-S**	2.205	56.00	21.43	95.34	16.55	2.90
C0470-068-3750-M	0.470	11.94	0.068	1.73	3.750	95.25	2.222	56.44	2.050	52.06	27.07	120.41	17.71	3.10	**C0470-068-3750-S**	2.359	59.91	21.43	95.34	15.40	2.70
C0470-068-4000-M	0.470	11.94	0.068	1.73	4.000	101.60	2.366	60.10	2.182	55.42	27.07	120.41	16.57	2.90	**C0470-068-4000-S**	2.512	63.81	21.43	95.34	14.41	2.52
C0470-068-4250-M	0.470	11.94	0.068	1.73	4.250	107.95	2.510	63.77	2.314	58.77	27.07	120.41	15.56	2.72	**C0470-068-4250-S**	2.666	67.72	21.43	95.34	13.53	2.37
C0470-068-4500-M	0.470	11.94	0.068	1.73	4.500	114.30	2.655	67.43	2.446	62.12	27.07	120.41	14.67	2.57	**C0470-068-4500-S**	2.820	71.62	21.43	95.34	12.76	2.23
C0470-068-4750-M	0.470	11.94	0.068	1.73	4.750	120.65	2.799	71.10	2.577	65.47	27.07	120.41	13.88	2.43	**C0470-068-4750-S**	2.973	75.53	21.43	95.34	12.07	2.11
C0470-068-5000-M	0.470	11.94	0.068	1.73	5.000	127.00	2.943	74.76	2.709	68.82	27.07	120.41	13.16	2.30	**C0470-068-5000-S**	3.127	79.43	21.43	95.34	11.45	2.00
C0470-068-5250-M	0.470	11.94	0.068	1.73	5.250	133.35	3.088	78.43	2.841	72.17	27.07	120.41	12.52	2.19	**C0470-068-5250-S**	3.281	83.34	21.43	95.34	10.89	1.90
C0470-068-5500-M	0.470	11.94	0.068	1.73	5.500	139.70	3.232	82.09	2.973	75.52	27.07	120.41	11.94	2.09	**C0470-068-5500-S**	3.435	87.24	21.43	95.34	10.38	1.82
C0470-068-5750-M	0.470	11.94	0.068	1.73	5.750	146.05	3.376	85.76	3.105	78.87	27.07	120.41	11.40	2.00	**C0470-068-5750-S**	3.588	91.15	21.43	95.34	9.92	1.74
C0470-068-6000-M	0.470	11.94	0.068	1.73	6.000	152.40	3.520	89.42	3.237	82.22	27.07	120.41	10.92	1.91	**C0470-068-6000-S**	3.742	95.05	21.43	95.34	9.49	1.66
C0470-068-6250-M	0.470	11.94	0.068	1.73	6.250	158.75	3.665	93.09	3.369	85.57	27.07	120.41	10.47	1.83	**C0470-068-6250-S**	3.896	98.96	21.43	95.34	9.11	1.59
C0470-068-6500-M	0.470	11.94	0.068	1.73	6.500	165.10	3.809	96.75	3.501	88.92	27.07	120.41	10.06	1.76	**C0470-068-6500-S**	4.050	102.86	21.43	95.34	8.75	1.53
C0470-068-6750-M	0.470	11.94	0.068	1.73	6.750	171.45	3.953	100.42	3.633	92.27	27.07	120.41	9.68	1.69	**C0470-068-6750-S**	4.203	106.77	21.43	95.34	8.42	1.47
C0470-068-7000-M	0.470	11.94	0.068	1.73	7.000	177.80	4.098	104.08	3.765	95.62	27.07	120.41	9.33	1.63	**C0470-068-7000-S**	4.357	110.67	21.43	95.34	8.11	1.42
C0470-068-7500-M	0.470	11.94	0.068	1.73	7.500	190.50	4.386	111.41	4.029	102.33	27.07	120.41	8.69	1.52	**C0470-068-7500-S**	4.665	118.48	21.43	95.34	7.56	1.32
C0470-068-8000-M	0.470	11.94	0.068	1.73	8.000	203.20	4.675	118.74	4.292	109.03	27.07	120.41	8.14	1.42	**C0470-068-8000-S**	4.972	126.29	21.43	95.34	7.08	1.24
C0470-072-0688-M	0.470	11.94	0.072	1.83	0.688	17.46	0.476	12.09	0.461	11.70	31.63	140.70	149.64	26.19	**C0470-072-0688-S**	0.495	12.58	25.00	111.21	130.13	22.77
C0470-072-0750-M	0.470	11.94	0.072	1.83	0.750	19.05	0.514	13.06	0.496	12.61	31.63	140.70	134.21	23.49	**C0470-072-0750-S**	0.536	13.61	25.00	111.21	116.71	20.42
C0470-072-0813-M	0.470	11.94	0.072	1.83	0.813	20.64	0.553	14.03	0.532	13.51	31.63	140.70	121.66	21.29	**C0470-072-0813-S**	0.576	14.64	25.00	111.21	105.79	18.51
C0470-072-0875-M	0.470	11.94	0.072	1.83	0.875	22.23	0.591	15.00	0.568	14.42	31.63	140.70	111.26	19.47	**C0470-072-0875-S**	0.617	15.66	25.00	111.21	96.75	16.93
C0470-072-0938-M	0.470	11.94	0.072	1.83	0.938	23.81	0.629	15.97	0.603	15.32	31.63	140.70	102.50	17.94	**C0470-072-0938-S**	0.657	16.69	25.00	111.21	89.13	15.60
C0470-072-1000-M	0.470	11.94	0.072	1.83	1.000	25.40	0.667	16.94	0.639	16.22	31.63	140.70	95.01	16.63	**C0470-072-1000-S**	0.697	17.71	25.00	111.21	82.62	14.46
C0470-072-1125-M	0.470	11.94	0.072	1.83	1.125	28.58	0.743	18.88	0.710	18.03	31.63	140.70	82.91	14.51	**C0470-072-1125-S**	0.778	19.77	25.00	111.21	72.09	12.62
C0470-072-1250-M	0.470	11.94	0.072	1.83	1.250	31.75	0.820	20.82	0.781	19.84	31.63	140.70	73.54	12.87	**C0470-072-1250-S**	0.859	21.82	25.00	111.21	63.95	11.19
C0470-072-1375-M	0.470	11.94	0.072	1.83	1.375	34.93	0.896	22.76	0.852	21.65	31.63	140.70	66.07	11.56	**C0470-072-1375-S**	0.940	23.87	25.00	111.21	57.45	10.05
C0470-072-1500-M	0.470	11.94	0.072	1.83	1.500	38.10	0.973	24.70	0.924	23.46	31.63	140.70	59.98	10.50	**C0470-072-1500-S**	1.021	25.92	25.00	111.21	52.16	9.13
C0470-072-1625-M	0.470	11.94	0.072	1.83	1.625	41.28	1.049	26.65	0.995	25.27	31.63	140.70	54.92	9.61	**C0470-072-1625-S**	1.101	27.98	25.00	111.21	47.75	8.36
C0470-072-1750-M	0.470	11.94	0.072	1.83	1.750	44.45	1.125	28.59	1.066	27.07	31.63	140.70	50.64	8.86	**C0470-072-1750-S**	1.182	30.03	25.00	111.21	44.04	7.71
C0470-072-1875-M	0.470	11.94	0.072	1.83	1.875	47.63	1.202	30.53	1.137	28.88	31.63	140.70	46.99	8.22	**C0470-072-1875-S**	1.263	32.08	25.00	111.21	40.86	7.15
C0470-072-2000-M	0.470	11.94	0.072	1.83	2.000	50.80	1.278	32.47	1.208	30.69	31.63	140.70	43.82	7.67	**C0470-072-2000-S**	1.344	34.14	25.00	111.21	38.11	6.67
C0470-072-2125-M	0.470	11.94	0.072	1.83	2.125	53.98	1.355	34.41	1.280	32.50	31.63	140.70	41.06	7.18	**C0470-072-2125-S**	1.425	36.19	25.00	111.21	35.70	6.25
C0470-072-2250-M	0.470	11.94	0.072	1.83	2.250	57.15	1.431	36.35	1.351	34.31	31.63	140.70	38.62	6.76	**C0470-072-2250-S**	1.506	38.24	25.00	111.21	33.58	5.88
C0470-072-2375-M	0.470	11.94	0.072	1.83	2.375	60.33	1.507	38.29	1.422	36.12	31.63	140.70	36.46	6.38	**C0470-072-2375-S**	1.586	40.29	25.00	111.21	31.70	5.55
C0470-072-2500-M	0.470	11.94	0.072	1.83	2.500	63.50	1.584	40.23	1.493	37.93	31.63	140.70	34.52	6.04	**C0470-072-2500-S**	1.667	42.35	25.00	111.21	30.02	5.25
C0470-072-2625-M	0.470	11.94	0.072	1.83	2.625	66.68	1.660	42.17	1.564	39.73	31.63	140.70	32.78	5.74	**C0470-072-2625-S**	1.748	44.40	25.00	111.21	28.51	4.99
C0470-072-2750-M	0.470	11.94	0.072	1.83	2.750	69.85	1.736	44.11	1.636	41.54	31.63	140.70	31.21	5.46	**C0470-072-2750-S**	1.829	46.45	25.00	111.21	27.14	4.75
C0470-072-2875-M	0.470	11.94	0.072	1.83	2.875	73.03	1.813	46.05	1.707	43.35	31.63	140.70	29.78	5.21	**C0470-072-2875-S**	1.910	48.50	25.00	111.21	25.90	4.53
C0470-072-3000-M	0.470	11.94	0.072	1.83	3.000	76.20	1.889	47.99	1.778	45.16	31.63	140.70	28.48	4.98	**C0470-072-3000-S**	1.990	50.56	25.00	111.21	24.76	4.33
C0470-072-3250-M	0.470	11.94	0.072	1.83	3.250	82.55	2.042	51.87	1.920	48.78	31.63	140.70	26.19	4.58	**C0470-072-3250-S**	2.152	54.66	25.00	111.21	22.77	3.98
C0470-072-3500-M	0.470	11.94	0.072	1.83	3.500	88.90	2.195	55.75	2.063	52.39	31.63	140.70	24.24	4.24	**C0470-072-3500-S**	2.314	58.77	25.00	111.21	21.07	3.69
C0470-072-3750-M	0.470	11.94	0.072	1.83	3.750	95.25	2.348	59.63	2.205	56.01	31.63	140.70	22.55	3.95	**C0470-072-3750-S**	2.475	62.87	25.00	111.21	19.61	3.43
C0470-072-4000-M	0.470	11.94	0.072	1.83	4.000	101.60	2.500	63.51	2.347	59.63	31.63	140.70	21.09	3.69	**C0470-072-4000-S**	2.637	66.98	25.00	111.21	18.34	3.21
C0470-072-4250-M	0.470	11.94	0.072	1.83	4.250	107.95	2.653	67.39	2.490	63.24	31.63	140.70	19.81	3.47	**C0470-072-4250-S**	2.799	71.08	25.00	111.21	17.22	3.01
C0470-072-4500-M	0.470	11.94	0.072	1.83	4.500	114.30	2.806	71.27	2.632	66.86	31.63	140.70	18.67	3.27	**C0470-072-4500-S**	2.960	75.19	25.00	111.21	16.24	2.84

FOR INFORMATION ON ALTERNATIVE FINISHES, SEE PAGE 311

Part Numbers with an "*" are squared and not ground. **Part Numbers in bold** represent the newly expanded Associated Spring RAYMOND compression spring offering.

MUSIC WIRE																STAINLESS STEEL						
Catalog #	Outside Diameter (OD)		Wire Diameter (d)		Free Length (L) Approx		Load Length (L_1)		Solid Height (Sh) Approx		Load (P) at L_1		Spring Rate (R)		Catalog #	Load Length (L_1)		Load (P) at L_1		Spring Rate (R)	
	in	mm	in	mm	in	mm	in	mm	in	mm	lb	N	lb/in	N/mm		in	mm	lb	N	lb/in	N/mm
C0470-072-4750-M	0.470	11.94	0.072	1.83	4.750	120.65	2.959	75.15	2.775	70.48	31.63	140.70	17.66	3.09	**C0470-072-4750-S**	3.122	79.29	25.00	111.21	15.36	2.69
C0470-072-5000-M	0.470	11.94	0.072	1.83	5.000	127.00	3.111	79.03	2.917	74.09	31.63	140.70	16.75	2.93	**C0470-072-5000-S**	3.283	83.40	25.00	111.21	14.56	2.55
C0470-072-5250-M	0.470	11.94	0.072	1.83	5.250	133.35	3.264	82.91	3.059	77.71	31.63	140.70	15.93	2.79	**C0470-072-5250-S**	3.445	87.50	25.00	111.21	13.85	2.42
C0470-072-5500-M	0.470	11.94	0.072	1.83	5.500	139.70	3.417	86.79	3.202	81.33	31.63	140.70	15.19	2.66	**C0470-072-5500-S**	3.607	91.61	25.00	111.21	13.20	2.31
C0470-072-5750-M	0.470	11.94	0.072	1.83	5.750	146.05	3.570	90.67	3.344	84.94	31.63	140.70	14.51	2.54	**C0470-072-5750-S**	3.768	95.72	25.00	111.21	12.62	2.21
C0470-072-6000-M	0.470	11.94	0.072	1.83	6.000	152.40	3.723	94.55	3.487	88.56	31.63	140.70	13.89	2.43	**C0470-072-6000-S**	3.930	99.82	25.00	111.21	12.08	2.11
C0470-072-6250-M	0.470	11.94	0.072	1.83	6.250	158.75	3.875	98.43	3.629	92.18	31.63	140.70	13.32	2.33	**C0470-072-6250-S**	4.092	103.93	25.00	111.21	11.58	2.03
C0470-072-6500-M	0.470	11.94	0.072	1.83	6.500	165.10	4.028	102.31	3.771	95.79	31.63	140.70	12.80	2.24	**C0470-072-6500-S**	4.253	108.03	25.00	111.21	11.13	1.95
C0470-072-6750-M	0.470	11.94	0.072	1.83	6.750	171.45	4.181	106.19	3.914	99.41	31.63	140.70	12.31	2.15	**C0470-072-6750-S**	4.415	112.14	25.00	111.21	10.71	1.87
C0470-072-7000-M	0.470	11.94	0.072	1.83	7.000	177.80	4.334	110.07	4.056	103.03	31.63	140.70	11.86	2.08	**C0470-072-7000-S**	4.576	116.24	25.00	111.21	10.32	1.81
C0470-072-7500-M	0.470	11.94	0.072	1.83	7.500	190.50	4.639	117.83	4.341	110.26	31.63	140.70	11.06	1.93	**C0470-072-7500-S**	4.900	124.45	25.00	111.21	9.61	1.68
C0470-085-0688-M	0.470	11.94	0.085	2.16	0.688	17.46	0.537	13.63	0.536	13.61	49.51	220.25	328.54	57.49	C0470-085-0688-S	0.551	14.01	38.86	172.86	285.69	50.00
C0470-085-0750-M	0.470	11.94	0.085	2.16	0.750	19.05	0.581	14.76	0.579	14.70	49.51	220.25	293.14	51.30	C0470-085-0750-S	0.598	15.18	38.86	172.86	254.90	44.61
C0470-085-0813-M	0.470	11.94	0.085	2.16	0.813	20.64	0.625	15.88	0.622	15.80	49.51	220.25	264.62	46.31	C0470-085-0813-S	0.644	16.35	38.86	172.86	230.11	40.27
C0470-085-0875-M	0.470	11.94	0.085	2.16	0.875	22.23	0.670	17.01	0.665	16.89	49.51	220.25	241.16	42.20	C0470-085-0875-S	0.690	17.52	38.86	172.86	209.71	36.70
C0470-085-0938-M	0.470	11.94	0.085	2.16	0.938	23.81	0.714	18.14	0.708	17.99	49.51	220.25	221.53	38.77	C0470-085-0938-S	0.736	18.69	38.86	172.86	192.63	33.71
C0470-085-1000-M	0.470	11.94	0.085	2.16	1.000	25.40	0.758	19.26	0.751	19.09	49.51	220.25	204.84	35.85	C0470-085-1000-S	0.782	19.86	38.86	172.86	178.13	31.17
C0470-085-1125-M	0.470	11.94	0.085	2.16	1.125	28.58	0.847	21.51	0.838	21.28	49.51	220.25	178.03	31.16	C0470-085-1125-S	0.874	22.20	38.86	172.86	154.81	27.09
C0470-085-1250-M	0.470	11.94	0.085	2.16	1.250	31.75	0.935	23.76	0.924	23.47	49.51	220.25	157.43	27.55	C0470-085-1250-S	0.966	24.54	38.86	172.86	136.89	23.96
C0470-085-1375-M	0.470	11.94	0.085	2.16	1.375	34.93	1.024	26.01	1.010	25.66	49.51	220.25	141.10	24.69	C0470-085-1375-S	1.058	26.88	38.86	172.86	122.69	21.47
C0470-085-1500-M	0.470	11.94	0.085	2.16	1.500	38.10	1.113	28.26	1.097	27.85	49.51	220.25	127.84	22.37	C0470-085-1500-S	1.150	29.22	38.86	172.86	111.16	19.45
C0470-085-1625-M	0.470	11.94	0.085	2.16	1.625	41.28	1.201	30.51	1.183	30.04	49.51	220.25	116.85	20.45	C0470-085-1625-S	1.243	31.56	38.86	172.86	101.61	17.78
C0470-085-1750-M	0.470	11.94	0.085	2.16	1.750	44.45	1.290	32.76	1.269	32.24	49.51	220.25	107.61	18.83	C0470-085-1750-S	1.335	33.90	38.86	172.86	93.57	16.38
C0470-085-1875-M	0.470	11.94	0.085	2.16	1.875	47.63	1.378	35.01	1.355	34.43	49.51	220.25	99.72	17.45	C0470-085-1875-S	1.427	36.24	38.86	172.86	86.71	15.17
C0470-085-2000-M	0.470	11.94	0.085	2.16	2.000	50.80	1.467	37.26	1.442	36.62	49.51	220.25	92.91	16.26	C0470-085-2000-S	1.519	38.58	38.86	172.86	80.79	14.14
C0470-085-2125-M	0.470	11.94	0.085	2.16	2.125	53.98	1.556	39.51	1.528	38.81	49.51	220.25	86.97	15.22	C0470-085-2125-S	1.611	40.92	38.86	172.86	75.62	13.23
C0470-085-2250-M	0.470	11.94	0.085	2.16	2.250	57.15	1.644	41.76	1.614	41.00	49.51	220.25	81.74	14.30	C0470-085-2250-S	1.703	43.26	38.86	172.86	71.08	12.44
C0470-085-2375-M	0.470	11.94	0.085	2.16	2.375	60.33	1.733	44.01	1.701	43.19	49.51	220.25	77.11	13.49	C0470-085-2375-S	1.795	45.60	38.86	172.86	67.05	11.73
C0470-085-2500-M	0.470	11.94	0.085	2.16	2.500	63.50	1.821	46.26	1.787	45.38	49.51	220.25	72.97	12.77	C0470-085-2500-S	1.888	47.94	38.86	172.86	63.45	11.10
C0470-085-2625-M	0.470	11.94	0.085	2.16	2.625	66.68	1.910	48.52	1.873	47.58	49.51	220.25	69.26	12.12	C0470-085-2625-S	1.980	50.28	38.86	172.86	60.22	10.54
C0470-085-2750-M	0.470	11.94	0.085	2.16	2.750	69.85	1.999	50.77	1.959	49.77	49.51	220.25	65.90	11.53	C0470-085-2750-S	2.072	52.63	38.86	172.86	57.30	10.03
C0470-085-2875-M	0.470	11.94	0.085	2.16	2.875	73.03	2.087	53.02	2.046	51.96	49.51	220.25	62.85	11.00	C0470-085-2875-S	2.164	54.97	38.86	172.86	54.66	9.56
C0470-085-3000-M	0.470	11.94	0.085	2.16	3.000	76.20	2.176	55.27	2.132	54.15	49.51	220.25	60.08	10.51	C0470-085-3000-S	2.256	57.31	38.86	172.86	52.24	9.14
C0470-085-3250-M	0.470	11.94	0.085	2.16	3.250	82.55	2.353	59.77	2.304	58.53	49.51	220.25	55.20	9.66	C0470-085-3250-S	2.440	61.99	38.86	172.86	48.00	8.40
C0470-085-3500-M	0.470	11.94	0.085	2.16	3.500	88.90	2.530	64.27	2.477	62.92	49.51	220.25	51.06	8.93	C0470-085-3500-S	2.625	66.67	38.86	172.86	44.40	7.77
C0470-085-3750-M	0.470	11.94	0.085	2.16	3.750	95.25	2.707	68.77	2.650	67.30	49.51	220.25	47.49	8.31	C0470-085-3750-S	2.809	71.35	38.86	172.86	41.30	7.23
C0470-085-4000-M	0.470	11.94	0.085	2.16	4.000	101.60	2.885	73.27	2.822	71.68	49.51	220.25	44.39	7.77	C0470-085-4000-S	2.993	76.03	38.86	172.86	38.60	6.76
C0470-085-4250-M	0.470	11.94	0.085	2.16	4.250	107.95	3.062	77.77	2.995	76.07	49.51	220.25	41.67	7.29	C0470-085-4250-S	3.178	80.71	38.86	172.86	36.24	6.34
C0470-085-4500-M	0.470	11.94	0.085	2.16	4.500	114.30	3.239	82.27	3.167	80.45	49.51	220.25	39.27	6.87	C0470-085-4500-S	3.362	85.39	38.86	172.86	34.14	5.98
C0470-085-4750-M	0.470	11.94	0.085	2.16	4.750	120.65	3.416	86.77	3.340	84.83	49.51	220.25	37.12	6.50	C0470-085-4750-S	3.546	90.07	38.86	172.86	32.28	5.65
C0470-085-5000-M	0.470	11.94	0.085	2.16	5.000	127.00	3.593	91.27	3.512	89.22	49.51	220.25	35.20	6.16	C0470-085-5000-S	3.730	94.75	38.86	172.86	30.61	5.36
C0470-085-5250-M	0.470	11.94	0.085	2.16	5.250	133.35	3.771	95.77	3.685	93.60	49.51	220.25	33.47	5.86	C0470-085-5250-S	3.915	99.43	38.86	172.86	29.10	5.09
C0470-085-5500-M	0.470	11.94	0.085	2.16	5.500	139.70	3.948	100.27	3.858	97.98	49.51	220.25	31.90	5.58	C0470-085-5500-S	4.099	104.12	38.86	172.86	27.74	4.85
C0470-085-5750-M	0.470	11.94	0.085	2.16	5.750	146.05	4.125	104.77	4.030	102.36	49.51	220.25	30.47	5.33	C0470-085-5750-S	4.283	108.80	38.86	172.86	26.50	4.64
C0470-085-6000-M	0.470	11.94	0.085	2.16	6.000	152.40	4.302	109.28	4.203	106.75	49.51	220.25	29.16	5.10	C0470-085-6000-S	4.468	113.48	38.86	172.86	25.36	4.44
C0470-085-6250-M	0.470	11.94	0.085	2.16	6.250	158.75	4.479	113.78	4.375	111.13	49.51	220.25	27.96	4.89	C0470-085-6250-S	4.652	118.16	38.86	172.86	24.32	4.26
C0470-085-6500-M	0.470	11.94	0.085	2.16	6.500	165.10	4.657	118.28	4.548	115.51	49.51	220.25	26.86	4.70	C0470-085-6500-S	4.836	122.84	38.86	172.86	23.36	4.09
C0470-085-6750-M	0.470	11.94	0.085	2.16	6.750	171.45	4.834	122.78	4.720	119.90	49.51	220.25	25.84	4.52	C0470-085-6750-S	5.020	127.52	38.86	172.86	22.47	3.93
C0470-085-7000-M	0.470	11.94	0.085	2.16	7.000	177.80	5.011	127.28	4.893	124.28	49.51	220.25	24.89	4.36	C0470-085-7000-S	5.205	132.20	38.86	172.86	21.65	3.79
C0470-085-7500-M	0.470	11.94	0.085	2.16	7.500	190.50	5.365	136.28	5.238	133.05	49.51	220.25	23.20	4.06	C0470-085-7500-S	5.573	141.56	38.86	172.86	20.17	3.53
C0470-092-0750-M	0.470	11.94	0.092	2.34	0.750	19.05	0.635	16.13	0.615	15.61	50.27	223.59	437.00	76.48	C0470-092-0750-S	0.624	15.86	47.78	212.52	380.00	66.50
C0470-092-0813-M	0.470	11.94	0.092	2.34	0.813	20.64	0.684	17.37	0.661	16.80	50.60	225.10	393.55	68.87	C0470-092-0813-S	0.673	17.09	47.78	212.52	342.21	59.89
C0470-092-0875-M	0.470	11.94	0.092	2.34	0.875	22.23	0.733	18.61	0.708	17.98	50.88	226.34	357.95	62.64	C0470-092-0875-S	0.722	18.33	47.78	212.52	311.26	54.47
C0470-092-0938-M	0.470	11.94	0.092	2.34	0.938	23.81	0.782	19.86	0.754	19.16	51.12	227.37	328.26	57.45	C0470-092-0938-S	0.770	19.56	47.78	212.52	285.44	49.95
C0470-092-1000-M	0.470	11.94	0.092	2.34	1.000	25.40	0.831	21.10	0.801	20.34	51.31	228.25	303.12	53.05	C0470-092-1000-S	0.819	20.80	47.78	212.52	263.58	46.13
C0470-092-1125-M	0.470	11.94	0.092	2.34	1.125	28.58	0.929	23.59	0.894	22.71	51.63	229.65	262.85	46.00	C0470-092-1125-S	0.916	23.27	47.78	212.52	228.57	40.00
C0470-092-1250-M	0.470	11.94	0.092	2.34	1.250	31.75	1.026	26.07	0.987	25.07	51.87	230.72	232.03	40.61	C0470-092-1250-S	1.013	25.74	47.78	212.52	201.77	35.31
C0470-092-1375-M	0.470	11.94	0.092	2.34	1.375	34.93	1.081	27.45	1.080	27.43	61.14	271.95	207.68	36.34	C0470-092-1375-S	1.110	28.21	47.78	212.52	180.59	31.60
C0470-092-1500-M	0.470	11.94	0.092	2.34	1.500	38.10	1.175	29.84	1.173	29.80	61.14	271.95	187.95	32.89	C0470-092-1500-S	1.208	30.67	47.78	212.52	163.44	28.60
C0470-092-1625-M	0.470	11.94	0.092	2.34	1.625	41.28	1.269	32.23	1.266	32.16	61.14	271.95	171.65	30.04	C0470-092-1625-S	1.305	33.14	47.78	212.52	149.26	26.12
C0470-092-1750-M	0.470	11.94	0.092	2.34	1.750	44.45	1.363	34.62	1.359	34.53	61.14	271.95	157.95	27.64	C0470-092-1750-S	1.402	35.61	47.78	212.52	137.34	24.04
C0470-092-1875-M	0.470	11.94	0.092	2.34	1.875	47.63	1.457	37.01	1.452	36.89	61.14	271.95	146.27	25.60	C0470-092-1875-S	1.499	38.08	47.78	212.52	127.19	22.26
C0470-092-2000-M	0.470	11.94	0.092	2.34	2.000	50.80	1.551	39.40	1.546	39.26	61.14	271.95	136.20	23.84	C0470-092-2000-S	1.597	40.55	47.78	212.52	118.44	20.73
C0470-092-2125-M	0.470	11.94	0.092	2.34	2.125	53.98	1.645	41.79	1.639	41.62	61.14	271.95	127.43	22.30	C0470-092-2125-S	1.694	43.02	47.78	212.52	110.81	19.39

Part Numbers with an "*" are squared and not ground. **Part Numbers in bold** represent the newly expanded Associated Spring RAYMOND compression spring offering.

MUSIC WIRE															STAINLESS STEEL					
Catalog #	Outside Diameter (OD)		Wire Diameter (d)		Free Length (L) Approx		Load Length (L_1)		Solid Height (Sh) Approx		Load (P) at L_1		Spring Rate (R)		Catalog #	Load Length (L_1)		Load (P) at L_1		Spring Rate (R)	
	in	mm	in	mm	in	mm	in	mm	in	mm	lb	N	lb/in	N/mm		in	mm	lb	N	lb/in	N/mm
C0470-092-2250-M	**0.470**	**11.94**	**0.092**	**2.34**	**2.250**	**57.15**	**1.739**	**44.18**	**1.732**	**43.98**	**61.14**	**271.95**	**119.72**	**20.95**	**C0470-092-2250-S**	**1.791**	**45.49**	**47.78**	**212.52**	**104.11**	**18.22**
C0470-092-2500-M	**0.470**	**11.94**	**0.092**	**2.34**	**2.500**	**63.50**	**1.928**	**48.96**	**1.918**	**48.71**	**61.14**	**271.95**	**106.80**	**18.69**	**C0470-092-2500-S**	**1.986**	**50.43**	**47.78**	**212.52**	**92.87**	**16.25**
C0470-092-2625-M	**0.470**	**11.94**	**0.092**	**2.34**	**2.625**	**66.68**	**2.022**	**51.35**	**2.011**	**51.08**	**61.14**	**271.95**	**101.33**	**17.73**	**C0470-092-2625-S**	**2.083**	**52.90**	**47.78**	**212.52**	**88.11**	**15.42**
C0470-092-2750-M	**0.470**	**11.94**	**0.092**	**2.34**	**2.750**	**69.85**	**2.116**	**53.74**	**2.104**	**53.44**	**61.14**	**271.95**	**96.39**	**16.87**	**C0470-092-2750-S**	**2.180**	**55.37**	**47.78**	**212.52**	**83.82**	**14.67**
C0470-092-2875-M	**0.470**	**11.94**	**0.092**	**2.34**	**2.875**	**73.03**	**2.210**	**56.13**	**2.197**	**55.81**	**61.14**	**271.95**	**91.92**	**16.09**	**C0470-092-2875-S**	**2.277**	**57.84**	**47.78**	**212.52**	**79.93**	**13.99**
C0470-092-3000-M	**0.470**	**11.94**	**0.092**	**2.34**	**3.000**	**76.20**	**2.304**	**58.52**	**2.290**	**58.17**	**61.14**	**271.95**	**87.84**	**15.37**	**C0470-092-3000-S**	**2.374**	**60.31**	**47.78**	**212.52**	**76.38**	**13.37**
C0470-092-3250-M	**0.470**	**11.94**	**0.092**	**2.34**	**3.250**	**82.55**	**2.492**	**63.30**	**2.476**	**62.90**	**61.14**	**271.95**	**80.67**	**14.12**	**C0470-092-3250-S**	**2.569**	**65.25**	**47.78**	**212.52**	**70.15**	**12.28**
C0470-092-3500-M	**0.470**	**11.94**	**0.092**	**2.34**	**3.500**	**88.90**	**2.680**	**68.08**	**2.663**	**67.63**	**61.14**	**271.95**	**74.59**	**13.05**	**C0470-092-3500-S**	**2.763**	**70.19**	**47.78**	**212.52**	**64.86**	**11.35**
C0470-092-3750-M	**0.470**	**11.94**	**0.092**	**2.34**	**3.750**	**95.25**	**2.869**	**72.86**	**2.849**	**72.36**	**61.14**	**271.95**	**69.36**	**12.14**	**C0470-092-3750-S**	**2.958**	**75.13**	**47.78**	**212.52**	**60.31**	**10.55**
C0470-092-4000-M	**0.470**	**11.94**	**0.092**	**2.34**	**4.000**	**101.60**	**3.057**	**77.64**	**3.035**	**77.08**	**61.14**	**271.95**	**64.82**	**11.34**	**C0470-092-4000-S**	**3.152**	**80.07**	**47.78**	**212.52**	**56.36**	**9.86**
C0470-092-4250-M	**0.470**	**11.94**	**0.092**	**2.34**	**4.250**	**107.95**	**3.245**	**82.42**	**3.221**	**81.81**	**61.14**	**271.95**	**60.83**	**10.65**	**C0470-092-4250-S**	**3.347**	**85.01**	**47.78**	**212.52**	**52.90**	**9.26**
C0470-092-4500-M	**0.470**	**11.94**	**0.092**	**2.34**	**4.500**	**114.30**	**3.433**	**87.20**	**3.407**	**86.54**	**61.14**	**271.95**	**57.31**	**10.03**	**C0470-092-4500-S**	**3.541**	**89.95**	**47.78**	**212.52**	**49.83**	**8.72**
C0470-092-4750-M	**0.470**	**11.94**	**0.092**	**2.34**	**4.750**	**120.65**	**3.621**	**91.98**	**3.593**	**91.27**	**61.14**	**271.95**	**54.17**	**9.48**	**C0470-092-4750-S**	**3.736**	**94.89**	**47.78**	**212.52**	**47.11**	**8.24**
C0470-092-5000-M	**0.470**	**11.94**	**0.092**	**2.34**	**5.000**	**127.00**	**3.810**	**96.76**	**3.780**	**96.00**	**61.14**	**271.95**	**51.36**	**8.99**	**C0470-092-5000-S**	**3.930**	**99.83**	**47.78**	**212.52**	**44.66**	**7.82**
C0470-092-5250-M	**0.470**	**11.94**	**0.092**	**2.34**	**5.250**	**133.35**	**3.998**	**101.54**	**3.966**	**100.73**	**61.14**	**271.95**	**48.82**	**8.54**	**C0470-092-5250-S**	**4.125**	**104.77**	**47.78**	**212.52**	**42.46**	**7.43**
C0470-092-5500-M	**0.470**	**11.94**	**0.092**	**2.34**	**5.500**	**139.70**	**4.186**	**106.32**	**4.152**	**105.46**	**61.14**	**271.95**	**46.53**	**8.14**	**C0470-092-5500-S**	**4.319**	**109.71**	**47.78**	**212.52**	**40.46**	**7.08**
C0470-092-5750-M	**0.470**	**11.94**	**0.092**	**2.34**	**5.750**	**146.05**	**4.374**	**111.11**	**4.338**	**110.19**	**61.14**	**271.95**	**44.44**	**7.78**	**C0470-092-5750-S**	**4.514**	**114.65**	**47.78**	**212.52**	**38.64**	**6.76**
C0470-092-6000-M	**0.470**	**11.94**	**0.092**	**2.34**	**6.000**	**152.40**	**4.562**	**115.89**	**4.524**	**114.91**	**61.14**	**271.95**	**42.53**	**7.44**	**C0470-092-6000-S**	**4.708**	**119.59**	**47.78**	**212.52**	**36.98**	**6.47**
C0470-092-6250-M	**0.470**	**11.94**	**0.092**	**2.34**	**6.250**	**158.75**	**4.751**	**120.67**	**4.710**	**119.64**	**61.14**	**271.95**	**40.78**	**7.14**	**C0470-092-6250-S**	**4.903**	**124.52**	**47.78**	**212.52**	**35.46**	**6.20**
C0470-092-6500-M	**0.470**	**11.94**	**0.092**	**2.34**	**6.500**	**165.10**	**4.939**	**125.45**	**4.896**	**124.37**	**61.14**	**271.95**	**39.16**	**6.85**	**C0470-092-6500-S**	**5.097**	**129.46**	**47.78**	**212.52**	**34.05**	**5.96**
C0470-092-6750-M	**0.470**	**11.94**	**0.092**	**2.34**	**6.750**	**171.45**	**5.127**	**130.23**	**5.083**	**129.10**	**61.14**	**271.95**	**37.67**	**6.59**	**C0470-092-6750-S**	**5.291**	**134.40**	**47.78**	**212.52**	**32.76**	**5.73**
C0470-092-7000-M	**0.470**	**11.94**	**0.092**	**2.34**	**7.000**	**177.80**	**5.315**	**135.01**	**5.269**	**133.83**	**61.14**	**271.95**	**36.29**	**6.35**	**C0470-092-7000-S**	**5.486**	**139.34**	**47.78**	**212.52**	**31.56**	**5.52**
C0470-092-7500-M	**0.470**	**11.94**	**0.092**	**2.34**	**7.500**	**190.50**	**5.692**	**144.57**	**5.641**	**143.29**	**61.14**	**271.95**	**33.81**	**5.92**	**C0470-092-7500-S**	**5.875**	**149.22**	**47.78**	**212.52**	**29.40**	**5.14**
D12600	0.472	12.00	0.079	2.00	0.709	18.00	0.441	11.20	0.433	11.00	71.43	317.74	266.17	46.58	D22600	0.441	11.20	59.50	264.68	221.71	38.80
D12610	0.472	12.00	0.079	2.00	1.043	26.50	0.614	15.60	0.591	15.00	71.43	317.74	169.77	29.71	D22610	0.614	15.60	59.50	264.68	141.43	24.75
D12620	0.472	12.00	0.079	2.00	1.516	38.50	0.866	22.00	0.827	21.00	71.43	317.74	109.83	19.22	D22620	0.866	22.00	59.50	264.68	91.49	16.01
D12630	0.472	12.00	0.079	2.00	2.165	55.00	1.205	30.60	1.142	29.00	71.43	317.74	74.51	13.04	D22630	1.205	30.60	59.50	264.68	62.06	10.86
D12640	0.472	12.00	0.079	2.00	3.130	79.50	1.709	43.40	1.614	41.00	71.43	317.74	50.34	8.81	D22640	1.709	43.40	59.50	264.68	41.94	7.34
C0480-035-0500-M	0.480	12.19	0.035	0.89	0.500	12.70	0.200	5.08	0.160	4.06	4.69	20.86	15.70	2.75	C0480-035-0500-S	0.282	7.15	2.86	12.71	13.08	2.29
C0480-035-0620-M	0.480	12.19	0.035	0.89	0.620	15.75	0.237	6.02	0.175	4.45	4.69	20.86	12.20	2.14	C0480-035-0620-S	0.339	8.61	2.86	12.71	10.16	1.78
C0480-035-0750-M	0.480	12.19	0.035	0.89	0.750	19.05	0.276	7.01	0.192	4.88	4.69	20.86	9.90	1.73	C0480-035-0750-S	0.404	10.25	2.86	12.71	8.25	1.44
C0480-035-0880-M	0.480	12.19	0.035	0.89	0.880	22.35	0.315	8.00	0.208	5.28	4.69	20.86	8.30	1.45	C0480-035-0880-S	0.467	11.86	2.86	12.71	6.91	1.21
C0480-035-1000-M	0.480	12.19	0.035	0.89	1.000	25.40	0.352	8.94	0.223	5.66	4.69	20.86	7.20	1.26	C0480-035-1000-S	0.524	13.30	2.86	12.71	6.00	1.05
C0480-035-1250-M	0.480	12.19	0.035	0.89	1.250	31.75	0.427	10.85	0.255	6.48	4.69	20.86	5.70	1.00	C0480-035-1250-S	0.648	16.47	2.86	12.71	4.75	0.83
C0480-035-1500-M	0.480	12.19	0.035	0.89	1.500	38.10	0.503	12.78	0.287	7.29	4.69	20.86	4.70	0.82	C0480-035-1500-S	0.770	19.56	2.86	12.71	3.92	0.69
C0480-035-1750-M	0.480	12.19	0.035	0.89	1.750	44.45	0.579	14.71	0.319	8.10	4.69	20.86	4.00	0.70	C0480-035-1750-S	0.893	22.67	2.86	12.71	3.33	0.58
C0480-035-2000-M	0.480	12.19	0.035	0.89	2.000	50.80	0.655	16.64	0.351	8.92	4.69	20.86	3.50	0.61	C0480-035-2000-S	1.020	25.91	2.86	12.71	2.92	0.51
C0480-035-2500-M	0.480	12.19	0.035	0.89	2.500	63.50	0.825	20.96	0.414	10.52	4.69	20.86	2.80	0.49	C0480-035-2500-S	1.275	32.39	2.86	12.71	2.33	0.41
C0480-035-3000-M	0.480	12.19	0.035	0.89	3.000	76.20	0.958	24.33	0.478	12.14	4.69	20.86	2.30	0.40	C0480-035-3000-S	1.509	38.32	2.86	12.71	1.92	0.34
C0480-038-0500-M	0.480	12.19	0.038	0.97	0.500	12.70	0.200	5.08	0.144	3.66	6.00	26.69	20.00	3.50	C0480-038-0500-S	0.285	7.24	3.58	15.93	16.66	2.92
C0480-038-0625-M	0.480	12.19	0.038	0.97	0.620	15.75	0.220	5.59	0.167	4.24	6.00	26.69	15.00	2.63	C0480-038-0625-S	0.333	8.47	3.58	15.93	12.50	2.19
C0480-038-0750-M	0.480	12.19	0.038	0.97	0.750	19.05	0.270	6.86	0.185	4.70	6.00	26.69	12.50	2.19	C0480-038-0750-S	0.406	10.32	3.58	15.93	10.41	1.82
C0480-038-0880-M	0.480	12.19	0.038	0.97	0.880	22.35	0.305	7.75	0.207	5.26	6.00	26.69	10.50	1.84	C0480-038-0880-S	0.471	11.96	3.58	15.93	8.75	1.53
C0480-038-1000-M	0.480	12.19	0.038	0.97	1.000	25.40	0.370	9.40	0.220	5.59	6.00	26.69	9.50	1.66	C0480-038-1000-S	0.548	13.91	3.58	15.93	7.91	1.38
C0480-038-1250-M	0.480	12.19	0.038	0.97	1.250	31.75	0.450	11.43	0.259	6.58	6.00	26.69	7.50	1.31	C0480-038-1250-S	0.677	17.19	3.58	15.93	6.25	1.09
C0480-038-1500-M	0.480	12.19	0.038	0.97	1.500	38.10	0.500	12.70	0.305	7.75	6.00	26.69	6.00	1.05	C0480-038-1500-S	0.784	19.91	3.58	15.93	5.00	0.87
C0480-038-1750-M	0.480	12.19	0.038	0.97	1.750	44.45	0.660	16.76	0.352	8.94	6.00	26.69	5.50	0.96	C0480-038-1750-S	0.969	24.60	3.58	15.93	4.58	0.80
C0480-038-2000-M	0.480	12.19	0.038	0.97	2.000	50.80	0.756	19.20	0.388	9.86	6.00	26.69	4.80	0.84	C0480-038-2000-S	1.105	28.06	3.58	15.93	4.00	0.70
C0480-038-2250-M	0.480	12.19	0.038	0.97	2.250	57.15	0.963	24.46	0.397	10.08	6.00	26.69	4.70	0.82	C0480-038-2250-S	1.336	33.92	3.58	15.93	3.92	0.69
C0480-038-2500-M	0.480	12.19	0.038	0.97	2.500	63.50	1.065	27.05	0.429	10.90	6.00	26.69	4.20	0.74	C0480-038-2500-S	1.477	37.51	3.58	15.93	3.50	0.61
C0480-038-2750-M	0.480	12.19	0.038	0.97	2.750	69.85	1.168	29.67	0.462	11.73	6.00	26.69	3.80	0.67	C0480-038-2750-S	1.619	41.12	3.58	15.93	3.17	0.55
C0480-038-3000-M	0.480	12.19	0.038	0.97	3.000	76.20	1.270	32.26	0.494	12.55	6.00	26.69	3.50	0.61	C0480-038-3000-S	1.772	45.01	3.58	15.93	2.92	0.51
C0480-042-0500-M	0.480	12.19	0.042	1.07	0.500	12.70	0.220	5.59	0.167	4.24	7.80	34.70	28.00	4.90	C0480-042-0500-S	0.296	7.52	4.76	21.18	23.32	4.08
C0480-042-0625-M	0.480	12.19	0.042	1.07	0.620	15.75	0.249	6.32	0.194	4.93	7.80	34.70	21.00	3.68	C0480-042-0625-S	0.348	8.84	4.76	21.18	17.49	3.06
C0480-042-0750-M	0.480	12.19	0.042	1.07	0.750	19.05	0.315	8.00	0.213	5.41	7.80	34.70	18.00	3.15	C0480-042-0750-S	0.432	10.99	4.76	21.18	14.99	2.62
C0480-042-0880-M	0.480	12.19	0.042	1.07	0.880	22.35	0.355	9.02	0.239	6.07	7.80	34.70	15.00	2.63	C0480-042-0880-S	0.499	12.67	4.76	21.18	12.50	2.19
C0480-042-1000-M	0.480	12.19	0.042	1.07	1.000	25.40	0.400	10.16	0.263	6.68	7.80	34.70	13.00	2.28	C0480-042-1000-S	0.560	14.23	4.76	21.18	10.83	1.90
C0480-042-1250-M	0.480	12.19	0.042	1.07	1.250	31.75	0.470	11.94	0.317	8.05	7.80	34.70	10.00	1.75	C0480-042-1250-S	0.678	17.23	4.76	21.18	8.33	1.46
C0480-042-1500-M	0.480	12.19	0.042	1.07	1.500	38.10	0.580	14.73	0.358	9.09	7.80	34.70	8.50	1.49	C0480-042-1500-S	0.828	21.02	4.76	21.18	7.08	1.24
C0480-042-1750-M	0.480	12.19	0.042	1.07	1.750	44.45	0.737	18.72	0.418	10.62	7.80	34.70	7.70	1.35	C0480-042-1750-S	1.008	25.60	4.76	21.18	6.41	1.12
C0480-042-2000-M	0.480	12.19	0.042	1.07	2.000	50.80	0.836	21.23	0.462	11.73	7.80	34.70	6.70	1.17	C0480-042-2000-S	1.147	29.13	4.76	21.18	5.58	0.98
C0480-042-2250-M	0.480	12.19	0.042	1.07	2.250	57.15	0.928	23.57	0.505	12.83	7.80	34.70	5.90	1.03	C0480-042-2250-S	1.281	32.55	4.76	21.18	4.92	0.86
C0480-042-2500-M	0.480	12.19	0.042	1.07	2.500	63.50	1.125	28.58	0.520	13.21	7.80	34.70	5.70	1.00	C0480-042-2500-S	1.497	38.03	4.76	21.18	4.75	0.83
C0480-042-2750-M	0.480	12.19	0.042	1.07	2.750	69.85	1.233	31.32	0.561	14.25	7.80	34.70	5.10	0.89	C0480-042-2750-S	1.629	41.39	4.76	21.18	4.25	0.74

FOR INFORMATION ON ALTERNATIVE FINISHES, SEE PAGE 311

Part Numbers with an "*" are squared and not ground. **Part Numbers in bold** represent the newly expanded Associated Spring RAYMOND compression spring offering.

(OD) 0.480 - 0.480

MUSIC WIRE															STAINLESS STEEL						
Catalog #	Outside Diameter (OD)		Wire Diameter (d)		Free Length (L) Approx		Load Length (L_1)		Solid Height (Sh) Approx		Load (P) at L_1		Spring Rate (R)		Catalog #	Load Length (L_1)		Load (P) at L_1		Spring Rate (R)	
	in	mm	in	mm	in	mm	in	mm	in	mm	lb	N	lb/in	N/mm		in	mm	lb	N	lb/in	N/mm
C0480-042-3000-M	0.480	12.19	0.042	1.07	3.000	76.20	1.340	34.04	0.602	15.29	7.80	34.70	4.70	0.82	C0480-042-3000-S	1.784	45.31	4.76	21.18	3.92	0.69
C0480-045-0500-M	0.480	12.19	0.045	1.14	0.500	12.70	0.237	6.02	0.185	4.70	9.20	40.92	35.00	6.13	C0480-045-0500-S	0.303	7.71	5.73	25.48	29.16	5.10
C0480-045-0625-M	0.480	12.19	0.045	1.14	0.620	15.75	0.291	7.39	0.209	5.31	9.20	40.92	28.00	4.90	C0480-045-0625-S	0.374	9.51	5.73	25.48	23.32	4.08
C0480-045-0750-M	0.480	12.19	0.045	1.14	0.750	19.05	0.330	8.38	0.242	6.15	9.20	40.92	22.00	3.85	C0480-045-0750-S	0.437	11.11	5.73	25.48	18.33	3.21
C0480-045-0880-M	0.480	12.19	0.045	1.14	0.880	22.35	0.396	10.06	0.266	6.76	9.20	40.92	19.00	3.33	C0480-045-0880-S	0.518	13.16	5.73	25.48	15.83	2.77
C0480-045-1000-M	0.480	12.19	0.045	1.14	1.000	25.40	0.460	11.68	0.287	7.29	9.20	40.92	17.00	2.98	C0480-045-1000-S	0.595	15.12	5.73	25.48	14.16	2.48
C0480-045-1250-M	0.480	12.19	0.045	1.14	1.250	31.75	0.545	13.84	0.348	8.84	9.20	40.92	13.00	2.28	C0480-045-1250-S	0.721	18.31	5.73	25.48	10.83	1.90
C0480-045-1500-M	0.480	12.19	0.045	1.14	1.500	38.10	0.665	16.89	0.395	10.03	9.20	40.92	11.00	1.93	C0480-045-1500-S	0.875	22.22	5.73	25.48	9.16	1.60
C0480-045-1750-M	0.480	12.19	0.045	1.14	1.750	44.45	0.792	20.12	0.469	11.91	9.20	40.92	9.60	1.68	C0480-045-1750-S	1.034	26.25	5.73	25.48	8.00	1.40
C0480-045-2000-M	0.480	12.19	0.045	1.14	2.000	50.80	0.905	22.99	0.520	13.21	9.20	40.92	8.40	1.47	C0480-045-2000-S	1.181	30.00	5.73	25.48	7.00	1.22
C0480-045-2250-M	0.480	12.19	0.045	1.14	2.250	57.15	1.007	25.58	0.570	14.48	9.20	40.92	7.40	1.30	C0480-045-2250-S	1.321	33.54	5.73	25.48	6.16	1.08
C0480-045-2500-M	0.480	12.19	0.045	1.14	2.500	63.50	1.115	28.32	0.620	15.75	9.20	40.92	6.60	1.16	C0480-045-2500-S	1.458	37.03	5.73	25.48	5.50	0.96
C0480-045-2750-M	0.480	12.19	0.045	1.14	2.750	69.85	1.222	31.04	0.671	17.04	9.20	40.92	6.00	1.05	C0480-045-2750-S	1.604	40.73	5.73	25.48	5.00	0.87
C0480-045-3000-M	0.480	12.19	0.045	1.14	3.000	76.20	1.327	33.71	0.721	18.31	9.20	40.92	5.50	0.96	C0480-045-3000-S	1.750	44.44	5.73	25.48	4.58	0.80
C0480-051-0500-M	0.480	12.19	0.051	1.30	0.500	12.70	0.296	7.52	0.255	6.48	12.51	55.65	61.30	10.73	C0480-051-0500-S	0.339	8.61	8.22	36.57	51.06	8.94
C0480-051-0620-M	0.480	12.19	0.051	1.30	0.620	15.75	0.355	9.02	0.286	7.26	12.51	55.65	47.10	8.24	C0480-051-0620-S	0.410	10.43	8.22	36.57	39.23	6.87
C0480-051-0750-M	0.480	12.19	0.051	1.30	0.750	19.05	0.418	10.62	0.320	8.13	12.51	55.65	37.70	6.60	C0480-051-0750-S	0.488	12.40	8.22	36.57	31.40	5.50
C0480-051-0880-M	0.480	12.19	0.051	1.30	0.880	22.35	0.481	12.22	0.353	8.97	12.51	55.65	31.40	5.50	C0480-051-0880-S	0.566	14.37	8.22	36.57	26.16	4.58
C0480-051-1000-M	0.480	12.19	0.051	1.30	1.000	25.40	0.540	13.72	0.384	9.75	12.51	55.65	27.20	4.76	C0480-051-1000-S	0.637	16.18	8.22	36.57	22.66	3.97
C0480-051-1250-M	0.480	12.19	0.051	1.30	1.250	31.75	0.662	16.81	0.448	11.38	12.51	55.65	21.30	3.73	C0480-051-1250-S	0.787	19.98	8.22	36.57	17.74	3.11
C0480-051-1500-M	0.480	12.19	0.051	1.30	1.500	38.10	0.784	19.91	0.513	13.03	12.51	55.65	17.50	3.06	C0480-051-1500-S	0.936	23.78	8.22	36.57	14.58	2.55
C0480-051-1750-M	0.480	12.19	0.051	1.30	1.750	44.45	0.906	23.01	0.577	14.66	12.51	55.65	14.80	2.59	C0480-051-1750-S	1.083	27.51	8.22	36.57	12.33	2.16
C0480-051-2000-M	0.480	12.19	0.051	1.30	2.000	50.80	1.027	26.09	0.641	16.28	12.51	55.65	12.90	2.26	C0480-051-2000-S	1.235	31.37	8.22	36.57	10.75	1.88
C0480-051-2250-M	0.480	12.19	0.051	1.30	2.250	57.15	1.149	29.18	0.706	17.93	12.51	55.65	11.40	2.00	C0480-051-2250-S	1.384	35.16	8.22	36.57	9.50	1.66
C0480-051-2500-M	0.480	12.19	0.051	1.30	2.500	63.50	1.271	32.28	0.770	19.56	12.51	55.65	10.20	1.79	C0480-051-2500-S	1.532	38.93	8.22	36.57	8.50	1.49
C0480-051-2750-M	0.480	12.19	0.051	1.30	2.750	69.85	1.393	35.38	0.834	21.18	12.51	55.65	9.20	1.61	C0480-051-2750-S	1.677	42.60	8.22	36.57	7.66	1.34
C0480-051-3000-M	0.480	12.19	0.051	1.30	3.000	76.20	1.515	38.48	0.899	22.83	12.51	55.65	8.40	1.47	C0480-051-3000-S	1.825	46.36	8.22	36.57	7.00	1.22
C0480-055-0500-M	0.480	12.19	0.055	1.40	0.500	12.70	0.275	6.99	0.246	6.25	16.20	72.06	72.00	12.60	C0480-055-0500-S	0.331	8.42	10.11	44.95	59.98	10.50
C0480-055-0625-M	0.480	12.19	0.055	1.40	0.620	15.75	0.331	8.41	0.285	7.24	16.20	72.06	56.00	9.80	C0480-055-0625-S	0.403	10.25	10.11	44.95	46.65	8.16
C0480-055-0750-M	0.480	12.19	0.055	1.40	0.750	19.05	0.404	10.26	0.319	8.10	16.20	72.06	47.00	8.23	C0480-055-0750-S	0.492	12.49	10.11	44.95	39.15	6.85
C0480-055-0880-M	0.480	12.19	0.055	1.40	0.880	22.35	0.450	11.43	0.368	9.35	16.20	72.06	38.00	6.65	C0480-055-0880-S	0.561	14.24	10.11	44.95	31.65	5.54
C0480-055-1000-M	0.480	12.19	0.055	1.40	1.000	25.40	0.535	13.59	0.391	9.93	16.20	72.06	35.00	6.13	C0480-055-1000-S	0.653	16.60	10.11	44.95	29.16	5.10
C0480-055-1250-M	0.480	12.19	0.055	1.40	1.250	31.75	0.650	16.51	0.474	12.04	16.20	72.06	27.00	4.73	C0480-055-1250-S	0.801	20.34	10.11	44.95	22.49	3.94
C0480-055-1500-M	0.480	12.19	0.055	1.40	1.500	38.10	0.765	19.43	0.557	14.15	16.20	72.06	22.00	3.85	C0480-055-1500-S	0.949	24.09	10.11	44.95	18.33	3.21
C0480-055-1750-M	0.480	12.19	0.055	1.40	1.750	44.45	0.915	23.24	0.651	16.54	16.20	72.06	19.40	3.40	C0480-055-1750-S	1.125	28.57	10.11	44.95	16.16	2.83
C0480-055-2000-M	0.480	12.19	0.055	1.40	2.000	50.80	1.036	26.31	0.725	18.42	16.20	72.06	16.80	2.94	C0480-055-2000-S	1.278	32.46	10.11	44.95	13.99	2.45
C0480-055-2250-M	0.480	12.19	0.055	1.40	2.250	57.15	1.163	29.54	0.799	20.29	16.20	72.06	14.90	2.61	C0480-055-2250-S	1.436	36.47	10.11	44.95	12.41	2.17
C0480-055-2500-M	0.480	12.19	0.055	1.40	2.500	63.50	1.282	32.56	0.874	22.20	16.20	72.06	13.30	2.33	C0480-055-2500-S	1.588	40.33	10.11	44.95	11.08	1.94
C0480-055-2750-M	0.480	12.19	0.055	1.40	2.750	69.85	1.468	37.29	0.911	23.14	16.20	72.06	12.60	2.21	C0480-055-2750-S	1.787	45.39	10.11	44.95	10.50	1.84
C0480-055-3000-M	0.480	12.19	0.055	1.40	3.000	76.20	1.597	40.56	0.981	24.92	16.20	72.06	11.50	2.01	C0480-055-3000-S	1.945	49.40	10.11	44.95	9.58	1.68
C0480-059-0500-M	0.480	12.19	0.059	1.50	0.500	12.70	0.325	8.26	0.305	7.75	18.75	83.40	107.20	18.76	C0480-059-0500-S	0.363	9.21	12.27	54.58	89.30	15.63
C0480-059-0620-M	0.480	12.19	0.059	1.50	0.620	15.75	0.390	9.91	0.346	8.79	18.75	83.40	81.60	14.28	C0480-059-0620-S	0.439	11.16	12.27	54.58	67.97	11.90
C0480-059-0750-M	0.480	12.19	0.059	1.50	0.750	19.05	0.461	11.71	0.390	9.91	18.75	83.40	64.80	11.34	C0480-059-0750-S	0.523	13.28	12.27	54.58	53.98	9.45
C0480-059-1000-M	0.480	12.19	0.059	1.50	1.000	25.40	0.596	15.14	0.474	12.04	18.75	83.40	46.40	8.12	C0480-059-1000-S	0.683	17.34	12.27	54.58	38.65	6.76
C0480-059-1250-M	0.480	12.19	0.059	1.50	1.250	31.75	0.732	18.59	0.558	14.17	18.75	83.40	36.20	6.34	C0480-059-1250-S	0.843	21.41	12.27	54.58	30.16	5.28
C0480-059-1500-M	0.480	12.19	0.059	1.50	1.500	38.10	0.867	22.02	0.642	16.31	18.75	83.40	29.60	5.18	C0480-059-1500-S	1.002	25.46	12.27	54.58	24.66	4.31
C0480-059-1750-M	0.480	12.19	0.059	1.50	1.750	44.45	1.003	25.48	0.726	18.44	18.75	83.40	25.10	4.39	C0480-059-1750-S	1.163	29.54	12.27	54.58	20.91	3.66
C0480-059-2000-M	0.480	12.19	0.059	1.50	2.000	50.80	1.138	28.91	0.810	20.57	18.75	83.40	21.80	3.82	C0480-059-2000-S	1.324	33.64	12.27	54.58	18.16	3.18
C0480-059-2250-M	0.480	12.19	0.059	1.50	2.250	57.15	1.274	32.36	0.894	22.71	18.75	83.40	19.20	3.36	C0480-059-2250-S	1.483	37.66	12.27	54.58	15.99	2.80
C0480-059-2500-M	0.480	12.19	0.059	1.50	2.500	63.50	1.409	35.79	0.978	24.84	18.75	83.40	17.20	3.01	C0480-059-2500-S	1.644	41.75	12.27	54.58	14.33	2.51
C0480-059-2750-M	0.480	12.19	0.059	1.50	2.750	69.85	1.545	39.24	1.062	26.97	18.75	83.40	15.60	2.73	C0480-059-2750-S	1.806	45.87	12.27	54.58	13.00	2.27
C0480-059-3000-M	0.480	12.19	0.059	1.50	3.000	76.20	1.680	42.67	1.146	29.11	18.75	83.40	14.20	2.49	C0480-059-3000-S	1.963	49.85	12.27	54.58	11.83	2.07
C0480-063-0500-M	0.480	12.19	0.063	1.60	0.500	12.70	0.308	7.82	0.296	7.52	23.00	102.31	120.00	21.00	C0480-063-0500-S	0.355	9.01	14.52	64.57	99.96	17.49
C0480-063-0625-M	0.480	12.19	0.063	1.60	0.620	15.75	0.378	9.60	0.342	8.69	23.00	102.31	95.00	16.63	C0480-063-0625-S	0.437	11.09	14.52	64.57	79.14	13.85
C0480-063-0750-M	0.480	12.19	0.063	1.60	0.750	19.05	0.455	11.56	0.388	9.86	23.00	102.31	78.00	13.65	C0480-063-0750-S	0.527	13.38	14.52	64.57	64.97	11.37
C0480-063-0880-M	0.480	12.19	0.063	1.60	0.880	22.35	0.532	13.51	0.436	11.07	23.00	102.31	66.00	11.55	C0480-063-0880-S	0.616	15.65	14.52	64.57	54.98	9.62
C0480-063-1000-M	0.480	12.19	0.063	1.60	1.000	25.40	0.595	15.11	0.485	12.32	23.00	102.31	57.00	9.98	C0480-063-1000-S	0.694	17.63	14.52	64.57	47.48	8.31
C0480-063-1250-M	0.480	12.19	0.063	1.60	1.250	31.75	0.740	18.80	0.582	14.78	23.00	102.31	45.00	7.88	C0480-063-1250-S	0.863	21.91	14.52	64.57	37.49	6.56
C0480-063-1380-M	0.480	12.19	0.063	1.60	1.380	35.05	0.841	21.36	0.655	16.64	23.00	102.31	42.70	7.47	C0480-063-1380-S	0.972	24.69	14.52	64.57	35.57	6.22
C0480-063-1500-M	0.480	12.19	0.063	1.60	1.500	38.10	0.895	22.73	0.665	16.89	23.00	102.31	38.00	6.65	C0480-063-1500-S	1.041	26.45	14.52	64.57	31.65	5.54
C0480-063-1750-M	0.480	12.19	0.063	1.60	1.750	44.45	1.036	26.31	0.801	20.35	23.00	102.31	32.20	5.64	C0480-063-1750-S	1.209	30.70	14.52	64.57	26.82	4.69
C0480-063-2000-M	0.480	12.19	0.063	1.60	2.000	50.80	1.176	29.87	0.895	22.73	23.00	102.31	27.90	4.88	C0480-063-2000-S	1.375	34.94	14.52	64.57	23.24	4.07
C0480-063-2250-M	0.480	12.19	0.063	1.60	2.250	57.15	1.315	33.40	0.989	25.12	23.00	102.31	24.60	4.31	C0480-063-2250-S	1.542	39.16	14.52	64.57	20.49	3.59
C0480-063-2500-M	0.480	12.19	0.063	1.60	2.500	63.50	1.455	36.96	1.083	27.51	23.00	102.31	22.00	3.85	C0480-063-2500-S	1.708	43.38	14.52	64.57	18.33	3.21

Part Numbers with an "*" are squared and not ground. **Part Numbers in bold** represent the newly expanded Associated Spring RAYMOND compression spring offering.

MUSIC WIRE															STAINLESS STEEL					
Catalog #	Outside Diameter (OD)		Wire Diameter (d)		Free Length (L) Approx		Load Length (L_1)		Solid Height (Sh) Approx		Load (P) at L_1		Spring Rate (R)		Catalog #	Load Length (L_1)		Load (P) at L_1		Spring Rate (R)	
	in	mm	in	mm	in	mm	in	mm	in	mm	lb	N	lb/in	N/mm		in	mm	lb	N	lb/in	N/mm
C0480-063-2750-M	0.480	12.19	0.063	1.60	2.750	69.85	1.597	40.56	1.177	29.90	23.00	102.31	19.90	3.48	C0480-063-2750-S	1.874	47.61	14.52	64.57	16.58	2.90
C0480-063-3000-M	0.480	12.19	0.063	1.60	3.000	76.20	1.737	44.12	1.271	32.28	23.00	102.31	18.20	3.19	C0480-063-3000-S	2.043	51.88	14.52	64.57	15.16	2.65
C0480-067-0500-M	0.480	12.19	0.067	1.70	0.500	12.70	0.353	8.97	0.336	8.53	26.63	118.46	180.70	31.62	C0480-067-0500-S	0.385	9.77	17.37	77.25	150.52	26.34
C0480-067-0620-M	0.480	12.19	0.067	1.70	0.620	15.75	0.424	10.77	0.403	10.24	26.63	118.46	136.10	23.82	C0480-067-0620-S	0.467	11.86	17.37	77.25	113.37	19.84
C0480-067-0750-M	0.480	12.19	0.067	1.70	0.750	19.05	0.502	12.75	0.458	11.63	26.63	118.46	107.40	18.80	C0480-067-0750-S	0.556	14.12	17.37	77.25	89.46	15.66
C0480-067-0880-M	0.480	12.19	0.067	1.70	0.880	22.35	0.580	14.73	0.512	13.00	26.63	118.46	88.70	15.52	C0480-067-0880-S	0.645	16.38	17.37	77.25	73.89	12.93
C0480-067-1000-M	0.480	12.19	0.067	1.70	1.000	25.40	0.651	16.54	0.562	14.27	26.63	118.46	76.40	13.37	C0480-067-1000-S	0.727	18.47	17.37	77.25	63.64	11.14
C0480-067-1250-M	0.480	12.19	0.067	1.70	1.250	31.75	0.801	20.35	0.666	16.92	26.63	118.46	59.30	10.38	C0480-067-1250-S	0.898	22.82	17.37	77.25	49.40	8.64
C0480-067-1500-M	0.480	12.19	0.067	1.70	1.500	38.10	0.950	24.13	0.770	19.56	26.63	118.46	48.40	8.47	C0480-067-1500-S	1.069	27.16	17.37	77.25	40.32	7.06
C0480-067-1750-M	0.480	12.19	0.067	1.70	1.750	44.45	1.099	27.91	0.874	22.20	26.63	118.46	40.90	7.16	C0480-067-1750-S	1.240	31.50	17.37	77.25	34.07	5.96
C0480-067-2000-M	0.480	12.19	0.067	1.70	2.000	50.80	1.249	31.72	0.978	24.84	26.63	118.46	35.40	6.20	C0480-067-2000-S	1.411	35.84	17.37	77.25	29.49	5.16
C0480-067-2250-M	0.480	12.19	0.067	1.70	2.250	57.15	1.398	35.51	1.082	27.48	26.63	118.46	31.30	5.48	C0480-067-2250-S	1.584	40.23	17.37	77.25	26.07	4.56
C0480-067-2500-M	0.480	12.19	0.067	1.70	2.500	63.50	1.547	39.29	1.187	30.15	26.63	118.46	28.00	4.90	C0480-067-2500-S	1.755	44.59	17.37	77.25	23.32	4.08
C0480-067-2750-M	0.480	12.19	0.067	1.70	2.750	69.85	1.697	43.10	1.291	32.79	26.63	118.46	25.30	4.43	C0480-067-2750-S	1.926	48.92	17.37	77.25	21.08	3.69
C0480-067-3000-M	0.480	12.19	0.067	1.70	3.000	76.20	1.846	46.89	1.395	35.43	26.63	118.46	23.10	4.04	C0480-067-3000-S	2.098	53.28	17.37	77.25	19.24	3.37
C0480-072-0500-M	0.480	12.19	0.072	1.83	0.500	12.70	0.373	9.47	0.358	9.09	32.48	144.48	255.60	44.73	C0480-072-0500-S	0.400	10.17	21.23	94.43	212.92	37.26
C0480-072-0620-M	0.480	12.19	0.072	1.83	0.620	15.75	0.450	11.43	0.419	10.64	32.48	144.48	191.20	33.46	C0480-072-0620-S	0.487	12.36	21.23	94.43	159.27	27.87
C0480-072-0750-M	0.480	12.19	0.072	1.83	0.750	19.05	0.534	13.56	0.485	12.32	32.48	144.48	150.20	26.29	C0480-072-0750-S	0.580	14.74	21.23	94.43	125.12	21.90
C0480-072-0880-M	0.480	12.19	0.072	1.83	0.880	22.35	0.617	15.67	0.547	13.89	32.48	144.48	123.70	21.65	C0480-072-0880-S	0.674	17.12	21.23	94.43	103.04	18.03
C0480-072-1000-M	0.480	12.19	0.072	1.83	1.000	25.40	0.695	17.65	0.601	15.27	32.48	144.48	106.30	18.60	C0480-072-1000-S	0.760	19.31	21.23	94.43	88.55	15.50
C0480-072-1250-M	0.480	12.19	0.072	1.83	1.250	31.75	0.855	21.72	0.714	18.14	32.48	144.48	82.30	14.40	C0480-072-1250-S	0.940	23.88	21.23	94.43	68.56	12.00
C0480-072-1500-M	0.480	12.19	0.072	1.83	1.500	38.10	1.016	25.81	0.826	20.98	32.48	144.48	67.10	11.74	C0480-072-1500-S	1.120	28.45	21.23	94.43	55.89	9.78
C0480-072-1750-M	0.480	12.19	0.072	1.83	1.750	44.45	1.177	29.90	0.939	23.85	32.48	144.48	56.70	9.92	C0480-072-1750-S	1.301	33.03	21.23	94.43	47.23	8.27
C0480-072-2000-M	0.480	12.19	0.072	1.83	2.000	50.80	1.338	33.99	1.051	26.70	32.48	144.48	49.00	8.58	C0480-072-2000-S	1.480	37.59	21.23	94.43	40.82	7.14
C0480-072-2250-M	0.480	12.19	0.072	1.83	2.250	57.15	1.498	38.05	1.164	29.57	32.48	144.48	43.20	7.56	C0480-072-2250-S	1.660	42.17	21.23	94.43	35.99	6.30
C0480-072-2500-M	0.480	12.19	0.072	1.83	2.500	63.50	1.659	42.14	1.276	32.41	32.48	144.48	38.60	6.76	C0480-072-2500-S	1.840	46.73	21.23	94.43	32.15	5.63
C0480-072-2750-M	0.480	12.19	0.072	1.83	2.750	69.85	1.820	46.23	1.389	35.28	32.48	144.48	34.90	6.11	C0480-072-2750-S	2.020	51.30	21.23	94.43	29.07	5.09
C0480-072-3000-M	0.480	12.19	0.072	1.83	3.000	76.20	1.981	50.32	1.501	38.13	32.48	144.48	31.90	5.58	C0480-072-3000-S	2.201	55.91	21.23	94.43	26.57	4.65
C0480-072-3250-M	0.480	12.19	0.072	1.83	3.250	82.55	2.142	54.41	1.614	41.00	32.48	144.48	29.30	5.13	C0480-072-3250-S	2.380	60.46	21.23	94.43	24.41	4.27
C0480-072-3500-M	0.480	12.19	0.072	1.83	3.500	88.90	2.302	58.47	1.726	43.84	32.48	144.48	27.10	4.74	C0480-072-3500-S	2.560	65.01	21.23	94.43	22.57	3.95
C0480-074-0500-M	0.480	12.19	0.074	1.88	0.500	12.70	0.380	9.65	0.350	8.89	34.79	154.75	289.10	50.59	C0480-074-0500-S	0.405	10.28	22.98	102.22	240.82	42.14
C0480-074-0620-M	0.480	12.19	0.074	1.88	0.620	15.75	0.459	11.66	0.421	10.69	34.79	154.75	215.60	37.73	C0480-074-0620-S	0.492	12.50	22.98	102.22	179.60	31.43
C0480-074-0750-M	0.480	12.19	0.074	1.88	0.750	19.05	0.544	13.82	0.482	12.24	34.79	154.75	169.10	29.59	C0480-074-0750-S	0.587	14.91	22.98	102.22	140.86	24.65
C0480-074-0880-M	0.480	12.19	0.074	1.88	0.880	22.35	0.630	16.00	0.546	13.87	34.79	154.75	139.00	24.33	C0480-074-0880-S	0.682	17.31	22.98	102.22	115.79	20.26
C0480-074-1000-M	0.480	12.19	0.074	1.88	1.000	25.40	0.709	18.01	0.610	15.49	34.79	154.75	119.40	20.90	C0480-074-1000-S	0.769	19.53	22.98	102.22	99.46	17.41
C0480-074-1250-M	0.480	12.19	0.074	1.88	1.250	31.75	0.873	22.17	0.734	18.64	34.79	154.75	92.30	16.15	C0480-074-1250-S	0.951	24.16	22.98	102.22	76.89	13.46
C0480-074-1500-M	0.480	12.19	0.074	1.88	1.500	38.10	1.038	26.37	0.855	21.72	34.79	154.75	75.30	13.18	C0480-074-1500-S	1.134	28.79	22.98	102.22	62.73	10.98
C0480-074-1750-M	0.480	12.19	0.074	1.88	1.750	44.45	1.202	30.53	0.972	24.69	34.79	154.75	63.50	11.11	C0480-074-1750-S	1.316	33.42	22.98	102.22	52.90	9.26
C0480-074-2000-M	0.480	12.19	0.074	1.88	2.000	50.80	1.367	34.72	1.089	27.66	34.79	154.75	55.00	9.63	C0480-074-2000-S	1.498	38.06	22.98	102.22	45.82	8.02
C0480-074-2250-M	0.480	12.19	0.074	1.88	2.250	57.15	1.531	38.89	1.206	30.63	34.79	154.75	48.40	8.47	C0480-074-2250-S	1.680	42.67	22.98	102.22	40.32	7.06
C0480-074-2500-M	0.480	12.19	0.074	1.88	2.500	63.50	1.696	43.08	1.324	33.63	34.79	154.75	43.30	7.58	C0480-074-2500-S	1.863	47.32	22.98	102.22	36.07	6.31
C0480-074-2750-M	0.480	12.19	0.074	1.88	2.750	69.85	1.861	47.27	1.441	36.60	34.79	154.75	39.10	6.84	C0480-074-2750-S	2.044	51.93	22.98	102.22	32.57	5.70
C0480-074-3000-M	0.480	12.19	0.074	1.88	3.000	76.20	2.025	51.44	1.558	39.57	34.79	154.75	35.70	6.25	C0480-074-3000-S	2.227	56.57	22.98	102.22	29.74	5.20
C0480-074-3250-M	0.480	12.19	0.074	1.88	3.250	82.55	2.190	55.63	1.675	42.55	34.79	154.75	32.80	5.74	C0480-074-3250-S	2.409	61.19	22.98	102.22	27.32	4.78
C0480-074-3500-M	0.480	12.19	0.074	1.88	3.500	88.90	2.354	59.79	1.792	45.52	34.79	154.75	30.40	5.32	C0480-074-3500-S	2.593	65.85	22.98	102.22	25.32	4.43
C0480-081-0500-M	0.480	12.19	0.081	2.06	0.500	12.70	0.401	10.19	0.379	9.63	44.34	197.23	446.70	78.17	C0480-081-0500-S	0.422	10.73	28.86	128.36	372.10	65.12
C0480-081-0620-M	0.480	12.19	0.081	2.06	0.620	15.75	0.486	12.34	0.458	11.63	44.34	197.23	329.70	57.70	C0480-081-0620-S	0.515	13.08	28.86	128.36	274.64	48.06
C0480-081-0750-M	0.480	12.19	0.081	2.06	0.750	19.05	0.577	14.66	0.526	13.36	44.34	197.23	256.80	44.94	C0480-081-0750-S	0.615	15.62	28.86	128.36	213.91	37.43
C0480-081-0880-M	0.480	12.19	0.081	2.06	0.880	22.35	0.669	16.99	0.598	15.19	44.34	197.23	210.30	36.80	C0480-081-0880-S	0.715	18.17	28.86	128.36	175.18	30.66
C0480-081-1000-M	0.480	12.19	0.081	2.06	1.000	25.40	0.754	19.15	0.669	16.99	44.34	197.23	180.20	31.54	C0480-081-1000-S	0.808	20.52	28.86	128.36	150.11	26.27
C0480-081-1250-M	0.480	12.19	0.081	2.06	1.250	31.75	0.931	23.65	0.808	20.52	44.34	197.23	138.80	24.29	C0480-081-1250-S	1.000	25.41	28.86	128.36	115.62	20.23
C0480-081-1500-M	0.480	12.19	0.081	2.06	1.500	38.10	1.107	28.12	0.942	23.93	44.34	197.23	112.90	19.76	C0480-081-1500-S	1.193	30.31	28.86	128.36	94.05	16.46
C0480-081-1750-M	0.480	12.19	0.081	2.06	1.750	44.45	1.284	32.61	1.073	27.25	44.34	197.23	95.10	16.64	C0480-081-1750-S	1.386	35.20	28.86	128.36	79.22	13.86
C0480-081-2000-M	0.480	12.19	0.081	2.06	2.000	50.80	1.460	37.08	1.204	30.58	44.34	197.23	82.20	14.39	C0480-081-2000-S	1.579	40.10	28.86	128.36	68.47	11.98
C0480-081-2250-M	0.480	12.19	0.081	2.06	2.250	57.15	1.637	41.58	1.334	33.88	44.34	197.23	72.30	12.65	C0480-081-2250-S	1.771	44.98	28.86	128.36	60.23	10.54
C0480-081-2500-M	0.480	12.19	0.081	2.06	2.500	63.50	1.813	46.05	1.465	37.21	44.34	197.23	64.60	11.31	C0480-081-2500-S	1.964	49.88	28.86	128.36	53.81	9.42
C0480-081-2750-M	0.480	12.19	0.081	2.06	2.750	69.85	1.990	50.55	1.595	40.51	44.34	197.23	58.30	10.20	C0480-081-2750-S	2.156	54.76	28.86	128.36	48.56	8.50
C0480-081-3000-M	0.480	12.19	0.081	2.06	3.000	76.20	2.167	55.04	1.726	43.84	44.34	197.23	53.20	9.31	C0480-081-3000-S	2.349	59.66	28.86	128.36	44.32	7.76
C0480-081-3250-M	0.480	12.19	0.081	2.06	3.250	82.55	2.343	59.51	1.857	47.17	44.34	197.23	48.90	8.56	C0480-081-3250-S	2.542	64.56	28.86	128.36	40.73	7.13
C0480-081-3500-M	0.480	12.19	0.081	2.06	3.500	88.90	2.520	64.01	1.987	50.47	44.34	197.23	45.20	7.91	C0480-081-3500-S	2.734	69.43	28.86	128.36	37.65	6.59
C0500-041-0500-M	**0.500**	**12.70**	**0.041**	**1.04**	**0.500**	**12.70**	**0.220**	**5.60**	**0.180**	**4.56**	**4.98**	**22.17**	**17.83**	**3.12**	**C0500-041-0500-S**	**0.220**	**5.60**	**4.15**	**18.47**	**14.85**	**2.60**
C0500-041-0625-M	**0.500**	**12.70**	**0.041**	**1.04**	**0.625**	**15.88**	**0.267**	**6.77**	**0.213**	**5.42**	**4.92**	**21.88**	**13.72**	**2.40**	**C0500-041-0625-S**	**0.267**	**6.77**	**4.10**	**18.22**	**11.43**	**2.00**
C0500-041-0750-M	**0.500**	**12.70**	**0.041**	**1.04**	**0.750**	**19.05**	**0.312**	**7.94**	**0.247**	**6.27**	**4.88**	**21.72**	**11.16**	**1.95**	**C0500-041-0750-S**	**0.312**	**7.94**	**4.07**	**18.09**	**9.30**	**1.63**
C0500-041-0875-M	**0.500**	**12.70**	**0.041**	**1.04**	**0.875**	**22.23**	**0.357**	**9.06**	**0.278**	**7.07**	**4.87**	**21.67**	**9.40**	**1.65**	**C0500-041-0875-S**	**0.357**	**9.06**	**4.06**	**18.05**	**7.83**	**1.37**

FOR INFORMATION ON ALTERNATIVE FINISHES, SEE PAGE 311

Part Numbers with an "*" are squared and not ground. **Part Numbers in bold** represent the newly expanded Associated Spring RAYMOND compression spring offering.

MUSIC WIRE															STAINLESS STEEL						
Catalog #	Outside Diameter (OD)		Wire Diameter (d)		Free Length (L) Approx		Load Length (L_1)		Solid Height (Sh) Approx		Load (P) at L_1		Spring Rate (R)		Catalog #	Load Length (L_1)		Load (P) at L_1		Spring Rate (R)	
	in	mm	in	mm	in	mm	in	mm	in	mm	lb	N	lb/in	N/mm		in	mm	lb	N	lb/in	N/mm
C0500-041-1000-M	0.500	12.70	0.041	1.04	1.000	25.40	0.400	10.16	0.309	7.84	4.87	21.67	8.12	1.42	**C0500-041-1000-S**	0.400	10.16	4.06	18.05	6.76	1.18
C0500-041-1250-M	0.500	12.70	0.041	1.04	1.250	31.75	0.487	12.36	0.370	9.39	4.87	21.66	6.38	1.12	**C0500-041-1250-S**	0.487	12.36	4.06	18.05	5.32	0.93
C0500-041-1500-M	0.500	12.70	0.041	1.04	1.500	38.10	0.573	14.55	0.430	10.92	4.88	21.69	5.26	0.92	**C0500-041-1500-S**	0.573	14.55	4.06	18.07	4.38	0.77
C0500-041-1750-M	0.500	12.70	0.041	1.04	1.750	44.45	0.660	16.76	0.491	12.46	4.87	21.68	4.47	0.78	**C0500-041-1750-S**	0.660	16.76	4.06	18.06	3.72	0.65
C0500-041-2000-M	0.500	12.70	0.041	1.04	2.000	50.80	0.746	18.95	0.551	13.99	4.88	21.70	3.89	0.68	**C0500-041-2000-S**	0.746	18.95	4.06	18.07	3.24	0.57
C0500-041-2250-M	0.500	12.70	0.041	1.04	2.250	57.15	0.833	21.15	0.612	15.54	4.88	21.69	3.44	0.60	**C0500-041-2250-S**	0.833	21.15	4.06	18.06	2.87	0.50
C0500-041-2500-M	0.500	12.70	0.041	1.04	2.500	63.50	0.920	23.37	0.673	17.10	4.87	21.65	3.08	0.54	**C0500-041-2500-S**	0.920	23.37	4.05	18.03	2.57	0.45
C0500-041-2750-M	0.500	12.70	0.041	1.04	2.750	69.85	1.007	25.58	0.734	18.65	4.86	21.63	2.79	0.49	**C0500-041-2750-S**	1.007	25.58	4.05	18.02	2.32	0.41
C0500-041-3000-M	0.500	12.70	0.041	1.04	3.000	76.20	1.094	27.78	0.795	20.20	4.86	21.62	2.55	0.45	**C0500-041-3000-S**	1.094	27.78	4.05	18.01	2.12	0.37
C0500-063-0500-M	0.500	12.70	0.063	1.60	0.500	12.70	0.329	8.35	0.313	7.96	16.23	72.21	94.76	16.58	**C0500-063-0500-S**	0.329	8.35	13.52	60.15	78.94	13.81
C0500-063-0625-M	0.500	12.70	0.063	1.60	0.625	15.88	0.404	10.27	0.384	9.74	15.69	69.80	71.07	12.44	**C0500-063-0625-S**	0.404	10.27	13.07	58.14	59.20	10.36
C0500-063-0750-M	0.500	12.70	0.063	1.60	0.750	19.05	0.475	12.07	0.448	11.38	15.63	69.52	56.86	9.95	**C0500-063-0750-S**	0.475	12.07	13.02	57.91	47.36	8.29
C0500-063-0875-M	0.500	12.70	0.063	1.60	0.875	22.23	0.545	13.84	0.511	12.98	15.63	69.54	47.38	8.29	**C0500-063-0875-S**	0.545	13.84	13.02	57.93	39.47	6.91
C0500-063-1000-M	0.500	12.70	0.063	1.60	1.000	25.40	0.615	15.62	0.574	14.59	15.64	69.56	40.61	7.11	**C0500-063-1000-S**	0.615	15.62	13.03	57.95	33.83	5.92
C0500-063-1250-M	0.500	12.70	0.063	1.60	1.250	31.75	0.755	19.17	0.701	17.79	15.65	69.62	31.59	5.53	**C0500-063-1250-S**	0.755	19.17	13.04	57.99	26.31	4.60
C0500-063-1500-M	0.500	12.70	0.063	1.60	1.500	38.10	0.894	22.72	0.827	21.00	15.65	69.61	25.84	4.52	**C0500-063-1500-S**	0.894	22.72	13.03	57.98	21.53	3.77
C0500-063-1750-M	0.500	12.70	0.063	1.60	1.750	44.45	1.039	26.40	0.959	24.37	15.42	68.61	21.70	3.80	**C0500-063-1750-S**	1.039	26.40	12.85	57.15	18.08	3.16
C0500-063-2000-M	0.500	12.70	0.063	1.60	2.000	50.80	1.174	29.82	1.080	27.42	15.65	69.64	18.95	3.32	**C0500-063-2000-S**	1.174	29.82	13.04	58.01	15.79	2.76
C0500-063-2250-M	0.500	12.70	0.063	1.60	2.250	57.15	1.314	33.37	1.206	30.63	15.66	69.64	16.72	2.93	**C0500-063-2250-S**	1.314	33.37	13.04	58.01	13.93	2.44
C0500-063-2500-M	0.500	12.70	0.063	1.60	2.500	63.50	1.453	36.92	1.332	33.84	15.66	69.65	14.96	2.62	**C0500-063-2500-S**	1.453	36.92	13.04	58.02	12.46	2.18
C0500-063-2750-M	0.500	12.70	0.063	1.60	2.750	69.85	1.593	40.46	1.458	37.03	15.67	69.70	13.54	2.37	**C0500-063-2750-S**	1.593	40.46	13.05	58.06	11.28	1.97
C0500-063-3000-M	0.500	12.70	0.063	1.60	3.000	76.20	1.733	44.01	1.585	40.25	15.66	69.68	12.36	2.16	**C0500-063-3000-S**	1.733	44.01	13.05	58.04	10.30	1.80
C0500-072-0500-M	0.500	12.70	0.072	1.83	0.500	12.70	0.344	8.73	0.324	8.23	31.29	139.20	200.36	35.06	**C0500-072-0500-S**	0.358	9.10	23.65	105.20	166.90	29.21
C0500-072-0625-M	0.500	12.70	0.072	1.83	0.625	15.88	0.415	10.54	0.397	10.08	31.16	138.59	148.29	25.95	**C0500-072-0625-S**	0.434	11.01	23.65	105.20	123.53	21.62
C0500-072-0750-M	0.500	12.70	0.072	1.83	0.750	19.05	0.491	12.47	0.468	11.88	30.47	135.55	117.70	20.60	**C0500-072-0750-S**	0.509	12.92	23.65	105.20	98.04	17.16
C0500-072-0875-M	0.500	12.70	0.072	1.83	0.875	22.23	0.563	14.29	0.533	13.54	30.47	135.54	97.57	17.07	**C0500-072-0875-S**	0.584	14.83	23.65	105.20	81.28	14.22
C0500-072-1000-M	0.500	12.70	0.072	1.83	1.000	25.40	0.634	16.11	0.598	15.19	30.48	135.56	83.33	14.58	**C0500-072-1000-S**	0.659	16.75	23.65	105.20	69.41	12.15
C0500-072-1250-M	0.500	12.70	0.072	1.83	1.250	31.75	0.777	19.75	0.729	18.51	30.47	135.55	64.49	11.29	**C0500-072-1250-S**	0.810	20.57	23.65	105.20	53.72	9.40
C0500-072-1500-M	0.500	12.70	0.072	1.83	1.500	38.10	0.921	23.39	0.859	21.83	30.47	135.55	52.60	9.21	**C0500-072-1500-S**	0.960	24.39	23.65	105.20	43.82	7.67
C0500-072-1750-M	0.500	12.70	0.072	1.83	1.750	44.45	1.064	27.02	0.990	25.15	30.47	135.53	44.41	7.77	**C0500-072-1750-S**	1.111	28.21	23.65	105.20	36.99	6.47
C0500-072-2000-M	0.500	12.70	0.072	1.83	2.000	50.80	1.207	30.66	1.120	28.46	30.47	135.55	38.43	6.73	**C0500-072-2000-S**	1.261	32.03	23.65	105.20	32.01	5.60
C0500-072-2250-M	0.500	12.70	0.072	1.83	2.250	57.15	1.350	34.30	1.251	31.78	30.48	135.56	33.87	5.93	**C0500-072-2250-S**	1.412	35.86	23.65	105.20	28.21	4.94
C0500-072-2500-M	0.500	12.70	0.072	1.83	2.500	63.50	1.494	37.94	1.382	35.10	30.46	135.51	30.27	5.30	**C0500-072-2500-S**	1.562	39.68	23.65	105.20	25.22	4.41
C0500-072-2750-M	0.500	12.70	0.072	1.83	2.750	69.85	1.637	41.57	1.512	38.41	30.47	135.55	27.37	4.79	**C0500-072-2750-S**	1.713	43.50	23.65	105.20	22.80	3.99
C0500-072-3000-M	0.500	12.70	0.072	1.83	3.000	76.20	1.780	45.21	1.643	41.73	30.46	135.50	24.97	4.37	**C0500-072-3000-S**	1.863	47.32	23.65	105.20	20.80	3.64
C0500-072-3250-M	0.500	12.70	0.072	1.83	3.250	82.55	1.923	48.85	1.774	45.05	30.46	135.50	22.96	4.02	**C0500-072-3250-S**	2.013	51.14	23.65	105.20	19.13	3.35
C0500-072-3500-M	0.500	12.70	0.072	1.83	3.500	88.90	2.066	52.49	1.904	48.37	30.46	135.51	21.25	3.72	**C0500-072-3500-S**	2.164	54.96	23.65	105.20	17.70	3.10
C0529-045-1000-M	0.529	13.44	0.045	1.14	1.000	25.40	0.385	9.77	0.290	7.36	7.74	34.43	12.58	2.20	**C0529-045-1000-S**	0.437	11.10	6.16	27.40	10.94	1.91
C0529-045-1125-M	0.529	13.44	0.045	1.14	1.125	28.58	0.425	10.80	0.317	8.04	7.74	34.43	11.06	1.94	**C0529-045-1125-S**	0.484	12.31	6.16	27.40	9.62	1.68
C0529-045-1250-M	0.529	13.44	0.045	1.14	1.250	31.75	0.466	11.82	0.343	8.72	7.74	34.43	9.87	1.73	**C0529-045-1250-S**	0.532	13.52	6.16	27.40	8.58	1.50
C0529-045-1375-M	0.529	13.44	0.045	1.14	1.375	34.93	0.506	12.85	0.370	9.41	7.74	34.43	8.91	1.56	**C0529-045-1375-S**	0.580	14.73	6.16	27.40	7.75	1.36
C0529-045-1500-M	0.529	13.44	0.045	1.14	1.500	38.10	0.546	13.88	0.397	10.09	7.74	34.43	8.12	1.42	**C0529-045-1500-S**	0.627	15.94	6.16	27.40	7.06	1.24
C0529-045-1625-M	0.529	13.44	0.045	1.14	1.625	41.28	0.587	14.91	0.424	10.77	7.74	34.43	7.46	1.30	**C0529-045-1625-S**	0.675	17.15	6.16	27.40	6.48	1.13
C0529-045-1750-M	0.529	13.44	0.045	1.14	1.750	44.45	0.627	15.94	0.451	11.45	7.74	34.43	6.90	1.21	**C0529-045-1750-S**	0.723	18.36	6.16	27.40	6.00	1.05
C0529-045-1875-M	0.529	13.44	0.045	1.14	1.875	47.63	0.668	16.96	0.478	12.13	7.74	34.43	6.41	1.12	**C0529-045-1875-S**	0.770	19.57	6.16	27.40	5.58	0.98
C0529-045-2000-M	0.529	13.44	0.045	1.14	2.000	50.80	0.708	17.99	0.504	12.81	7.74	34.43	5.99	1.05	**C0529-045-2000-S**	0.818	20.78	6.16	27.40	5.21	0.91
C0529-045-2125-M	0.529	13.44	0.045	1.14	2.125	53.98	0.749	19.02	0.531	13.49	7.74	34.43	5.62	0.98	**C0529-045-2125-S**	0.866	21.99	6.16	27.40	4.89	0.86
C0529-045-2250-M	0.529	13.44	0.045	1.14	2.250	57.15	0.789	20.05	0.558	14.18	7.74	34.43	5.30	0.93	**C0529-045-2250-S**	0.913	23.20	6.16	27.40	4.61	0.81
C0529-045-2375-M	0.529	13.44	0.045	1.14	2.375	60.33	0.830	21.08	0.585	14.86	7.74	34.43	5.01	0.88	**C0529-045-2375-S**	0.961	24.41	6.16	27.40	4.36	0.76
C0529-045-2500-M	0.529	13.44	0.045	1.14	2.500	63.50	0.870	22.10	0.612	15.54	7.74	34.43	4.75	0.83	**C0529-045-2500-S**	1.009	25.62	6.16	27.40	4.13	0.72
C0529-045-2625-M	0.529	13.44	0.045	1.14	2.625	66.68	0.911	23.13	0.639	16.22	7.74	34.43	4.52	0.79	**C0529-045-2625-S**	1.056	26.83	6.16	27.40	3.93	0.69
C0529-045-2750-M	0.529	13.44	0.045	1.14	2.750	69.85	0.951	24.16	0.665	16.90	7.74	34.43	4.30	0.75	**C0529-045-2750-S**	1.104	28.04	6.16	27.40	3.74	0.65
C0529-045-2875-M	0.529	13.44	0.045	1.14	2.875	73.03	0.992	25.19	0.692	17.58	7.74	34.43	4.11	0.72	**C0529-045-2875-S**	1.151	29.25	6.16	27.40	3.57	0.63
C0529-045-3000-M	0.529	13.44	0.045	1.14	3.000	76.20	1.032	26.22	0.719	18.26	7.74	34.43	3.93	0.69	**C0529-045-3000-S**	1.199	30.46	6.16	27.40	3.42	0.60
C0529-045-3250-M	0.529	13.44	0.045	1.14	3.250	82.55	1.113	28.27	0.773	19.63	7.74	34.43	3.62	0.63	**C0529-045-3250-S**	1.294	32.88	6.16	27.40	3.15	0.55
C0529-045-3500-M	0.529	13.44	0.045	1.14	3.500	88.90	1.194	30.33	0.826	20.99	7.74	34.43	3.36	0.59	**C0529-045-3500-S**	1.390	35.30	6.16	27.40	2.92	0.51
C0529-045-3750-M	0.529	13.44	0.045	1.14	3.750	95.25	1.275	32.38	0.880	22.35	7.74	34.43	3.13	0.55	**C0529-045-3750-S**	1.485	37.72	6.16	27.40	2.72	0.48
C0529-045-4000-M	0.529	13.44	0.045	1.14	4.000	101.60	1.356	34.44	0.934	23.72	7.74	34.43	2.93	0.51	**C0529-045-4000-S**	1.580	40.14	6.16	27.40	2.55	0.45
C0529-045-4250-M	0.529	13.44	0.045	1.14	4.250	107.95	1.437	36.49	0.987	25.08	7.74	34.43	2.75	0.48	**C0529-045-4250-S**	1.675	42.56	6.16	27.40	2.39	0.42
C0529-045-4500-M	0.529	13.44	0.045	1.14	4.500	114.30	1.518	38.55	1.041	26.44	7.74	34.43	2.60	0.45	**C0529-045-4500-S**	1.771	44.98	6.16	27.40	2.26	0.39
C0529-045-4750-M	0.529	13.44	0.045	1.14	4.750	120.65	1.599	40.61	1.095	27.80	7.74	34.43	2.46	0.43	**C0529-045-4750-S**	1.866	47.40	6.16	27.40	2.14	0.37
C0529-045-5000-M	0.529	13.44	0.045	1.14	5.000	127.00	1.680	42.66	1.148	29.17	7.74	34.43	2.33	0.41	**C0529-045-5000-S**	1.961	49.82	6.16	27.40	2.03	0.35
C0529-045-5250-M	0.529	13.44	0.045	1.14	5.250	133.35	1.761	44.72	1.202	30.53	7.74	34.43	2.22	0.39	**C0529-045-5250-S**	2.057	52.24	6.16	27.40	1.93	0.34
C0529-045-5500-M	0.529	13.44	0.045	1.14	5.500	139.70	1.841	46.77	1.256	31.89	7.74	34.43	2.12	0.37	**C0529-045-5500-S**	2.152	54.66	6.16	27.40	1.84	0.32

Part Numbers with an "*" are squared and not ground. **Part Numbers in bold** represent the newly expanded Associated Spring RAYMOND compression spring offering.

MUSIC WIRE															STAINLESS STEEL					
Catalog #	Outside Diameter (OD)		Wire Diameter (d)		Free Length (L) Approx		Load Length (L_1)		Solid Height (Sh) Approx		Load (P) at L_1		Spring Rate (R)		Catalog #	Load Length (L_1)		Load (P) at L_1		Spring Rate (R)	
	in	mm	in	mm	in	mm	in	mm	in	mm	lb	N	lb/in	N/mm		in	mm	lb	N	lb/in	N/mm
C0529-045-5750-M	0.529	13.44	0.045	1.14	5.750	146.05	1.922	48.83	1.309	33.26	7.74	34.43	2.02	0.35	**C0529-045-5750-S**	2.247	57.08	6.16	27.40	1.76	0.31
C0529-045-6000-M	0.529	13.44	0.045	1.14	6.000	152.40	2.003	50.88	1.363	34.62	7.74	34.43	1.94	0.34	**C0529-045-6000-S**	2.342	59.50	6.16	27.40	1.68	0.29
C0529-045-6250-M	0.529	13.44	0.045	1.14	6.250	158.75	2.084	52.94	1.417	35.98	7.74	34.43	1.86	0.33	**C0529-045-6250-S**	2.438	61.92	6.16	27.40	1.62	0.28
C0529-045-6500-M	0.529	13.44	0.045	1.14	6.500	165.10	2.165	55.00	1.470	37.34	7.74	34.43	1.79	0.31	**C0529-045-6500-S**	2.533	64.34	6.16	27.40	1.55	0.27
C0529-045-6750-M	0.529	13.44	0.045	1.14	6.750	171.45	2.246	57.05	1.524	38.71	7.74	34.43	1.72	0.30	**C0529-045-6750-S**	2.628	66.76	6.16	27.40	1.49	0.26
C0529-045-7000-M	0.529	13.44	0.045	1.14	7.000	177.80	2.327	59.11	1.578	40.07	7.74	34.43	1.66	0.29	**C0529-045-7000-S**	2.724	69.18	6.16	27.40	1.44	0.25
C0529-045-7500-M	0.529	13.44	0.045	1.14	7.500	190.50	2.489	63.22	1.685	42.80	7.74	34.43	1.55	0.27	**C0529-045-7500-S**	2.914	74.02	6.16	27.40	1.34	0.24
C0529-045-8000-M	0.529	13.44	0.045	1.14	8.000	203.20	2.651	67.33	1.792	45.52	7.74	34.43	1.45	0.25	**C0529-045-8000-S**	3.105	78.86	6.16	27.40	1.26	0.22
C0529-045-8500-M	0.529	13.44	0.045	1.14	8.500	215.90	2.813	71.44	1.900	48.25	7.74	34.43	1.36	0.24	**C0529-045-8500-S**	3.295	83.70	6.16	27.40	1.18	0.21
C0529-045-9000-M	0.529	13.44	0.045	1.14	9.000	228.60	2.975	75.55	2.007	50.97	7.74	34.43	1.29	0.22	**C0529-045-9000-S**	3.486	88.54	6.16	27.40	1.12	0.20
C0529-045-9500-M	0.529	13.44	0.045	1.14	9.500	241.30	3.136	79.67	2.114	53.70	7.74	34.43	1.22	0.21	**C0529-045-9500-S**	3.676	93.38	6.16	27.40	1.06	0.19
C0529-047-1000-M	0.529	13.44	0.047	1.19	1.000	25.40	0.401	10.19	0.310	7.89	8.74	38.87	14.60	2.55	**C0529-047-1000-S**	0.452	11.48	6.95	30.93	12.69	2.22
C0529-047-1125-M	0.529	13.44	0.047	1.19	1.125	28.58	0.444	11.27	0.340	8.63	8.74	38.87	12.83	2.24	**C0529-047-1125-S**	0.501	12.74	6.95	30.93	11.15	1.95
C0529-047-1250-M	0.529	13.44	0.047	1.19	1.250	31.75	0.486	12.35	0.369	9.37	8.74	38.87	11.44	2.00	**C0529-047-1250-S**	0.551	13.99	6.95	30.93	9.95	1.74
C0529-047-1375-M	0.529	13.44	0.047	1.19	1.375	34.93	0.529	13.43	0.398	10.11	8.74	38.87	10.32	1.81	**C0529-047-1375-S**	0.600	15.25	6.95	30.93	8.98	1.57
C0529-047-1500-M	0.529	13.44	0.047	1.19	1.500	38.10	0.571	14.50	0.427	10.85	8.74	38.87	9.41	1.65	**C0529-047-1500-S**	0.650	16.50	6.95	30.93	8.18	1.43
C0529-047-1625-M	0.529	13.44	0.047	1.19	1.625	41.28	0.613	15.58	0.457	11.60	8.74	38.87	8.64	1.51	**C0529-047-1625-S**	0.699	17.76	6.95	30.93	7.51	1.31
C0529-047-1750-M	0.529	13.44	0.047	1.19	1.750	44.45	0.656	16.66	0.486	12.34	8.74	38.87	7.99	1.40	**C0529-047-1750-S**	0.749	19.01	6.95	30.93	6.94	1.22
C0529-047-1875-M	0.529	13.44	0.047	1.19	1.875	47.63	0.698	17.73	0.515	13.08	8.74	38.87	7.43	1.30	**C0529-047-1875-S**	0.798	20.27	6.95	30.93	6.46	1.13
C0529-047-2000-M	0.529	13.44	0.047	1.19	2.000	50.80	0.741	18.81	0.544	13.82	8.74	38.87	6.94	1.21	**C0529-047-2000-S**	0.847	21.52	6.95	30.93	6.03	1.06
C0529-047-2125-M	0.529	13.44	0.047	1.19	2.125	53.98	0.783	19.89	0.573	14.57	8.74	38.87	6.51	1.14	**C0529-047-2125-S**	0.897	22.78	6.95	30.93	5.66	0.99
C0529-047-2250-M	0.529	13.44	0.047	1.19	2.250	57.15	0.825	20.96	0.603	15.31	8.74	38.87	6.13	1.07	**C0529-047-2250-S**	0.946	24.03	6.95	30.93	5.33	0.93
C0529-047-2375-M	0.529	13.44	0.047	1.19	2.375	60.33	0.868	22.04	0.632	16.05	8.74	38.87	5.80	1.01	**C0529-047-2375-S**	0.996	25.29	6.95	30.93	5.04	0.88
C0529-047-2500-M	0.529	13.44	0.047	1.19	2.500	63.50	0.910	23.12	0.661	16.79	8.74	38.87	5.50	0.96	**C0529-047-2500-S**	1.045	26.54	6.95	30.93	4.78	0.84
C0529-047-2625-M	0.529	13.44	0.047	1.19	2.625	66.68	0.953	24.20	0.690	17.53	8.74	38.87	5.23	0.91	**C0529-047-2625-S**	1.094	27.80	6.95	30.93	4.54	0.80
C0529-047-2750-M	0.529	13.44	0.047	1.19	2.750	69.85	0.995	25.27	0.720	18.28	8.74	38.87	4.98	0.87	**C0529-047-2750-S**	1.144	29.05	6.95	30.93	4.33	0.76
C0529-047-2875-M	0.529	13.44	0.047	1.19	2.875	73.03	1.037	26.35	0.749	19.02	8.74	38.87	4.76	0.83	**C0529-047-2875-S**	1.193	30.31	6.95	30.93	4.14	0.72
C0529-047-3000-M	0.529	13.44	0.047	1.19	3.000	76.20	1.080	27.43	0.778	19.76	8.74	38.87	4.55	0.80	**C0529-047-3000-S**	1.243	31.56	6.95	30.93	3.96	0.69
C0529-047-3250-M	0.529	13.44	0.047	1.19	3.250	82.55	1.165	29.58	0.836	21.25	8.74	38.87	4.19	0.73	**C0529-047-3250-S**	1.341	34.07	6.95	30.93	3.64	0.64
C0529-047-3500-M	0.529	13.44	0.047	1.19	3.500	88.90	1.249	31.74	0.895	22.73	8.74	38.87	3.88	0.68	**C0529-047-3500-S**	1.440	36.58	6.95	30.93	3.38	0.59
C0529-047-3750-M	0.529	13.44	0.047	1.19	3.750	95.25	1.334	33.89	0.953	24.21	8.74	38.87	3.62	0.63	**C0529-047-3750-S**	1.539	39.09	6.95	30.93	3.15	0.55
C0529-047-4000-M	0.529	13.44	0.047	1.19	4.000	101.60	1.419	36.04	1.012	25.70	8.74	38.87	3.39	0.59	**C0529-047-4000-S**	1.638	41.60	6.95	30.93	2.94	0.52
C0529-047-4250-M	0.529	13.44	0.047	1.19	4.250	107.95	1.504	38.20	1.070	27.18	8.74	38.87	3.18	0.56	**C0529-047-4250-S**	1.737	44.11	6.95	30.93	2.77	0.48
C0529-047-4500-M	0.529	13.44	0.047	1.19	4.500	114.30	1.589	40.35	1.129	28.67	8.74	38.87	3.00	0.53	**C0529-047-4500-S**	1.835	46.62	6.95	30.93	2.61	0.46
C0529-047-4750-M	0.529	13.44	0.047	1.19	4.750	120.65	1.673	42.51	1.187	30.15	8.74	38.87	2.84	0.50	**C0529-047-4750-S**	1.934	49.13	6.95	30.93	2.47	0.43
C0529-047-5000-M	0.529	13.44	0.047	1.19	5.000	127.00	1.758	44.66	1.246	31.64	8.74	38.87	2.70	0.47	**C0529-047-5000-S**	2.033	51.64	6.95	30.93	2.34	0.41
C0529-047-5250-M	0.529	13.44	0.047	1.19	5.250	133.35	1.843	46.81	1.304	33.12	8.74	38.87	2.57	0.45	**C0529-047-5250-S**	2.132	54.15	6.95	30.93	2.23	0.39
C0529-047-5500-M	0.529	13.44	0.047	1.19	5.500	139.70	1.928	48.97	1.362	34.60	8.74	38.87	2.45	0.43	**C0529-047-5500-S**	2.231	56.66	6.95	30.93	2.13	0.37
C0529-047-5750-M	0.529	13.44	0.047	1.19	5.750	146.05	2.013	51.12	1.421	36.09	8.74	38.87	2.34	0.41	**C0529-047-5750-S**	2.330	59.17	6.95	30.93	2.03	0.36
C0529-047-6000-M	0.529	13.44	0.047	1.19	6.000	152.40	2.098	53.28	1.479	37.57	8.74	38.87	2.24	0.39	**C0529-047-6000-S**	2.428	61.68	6.95	30.93	1.95	0.34
C0529-047-6250-M	0.529	13.44	0.047	1.19	6.250	158.75	2.182	55.43	1.538	39.06	8.74	38.87	2.15	0.38	**C0529-047-6250-S**	2.527	64.19	6.95	30.93	1.87	0.33
C0529-047-6500-M	0.529	13.44	0.047	1.19	6.500	165.10	2.267	57.58	1.596	40.54	8.74	38.87	2.06	0.36	**C0529-047-6500-S**	2.626	66.70	6.95	30.93	1.80	0.31
C0529-047-6750-M	0.529	13.44	0.047	1.19	6.750	171.45	2.352	59.74	1.655	42.03	8.74	38.87	1.99	0.35	**C0529-047-6750-S**	2.725	69.21	6.95	30.93	1.73	0.30
C0529-047-7000-M	0.529	13.44	0.047	1.19	7.000	177.80	2.437	61.89	1.713	43.51	8.74	38.87	1.92	0.34	**C0529-047-7000-S**	2.824	71.72	6.95	30.93	1.67	0.29
C0529-047-7500-M	0.529	13.44	0.047	1.19	7.500	190.50	2.606	66.20	1.830	46.48	8.74	38.87	1.79	0.31	**C0529-047-7500-S**	3.021	76.74	6.95	30.93	1.55	0.27
C0529-047-8000-M	0.529	13.44	0.047	1.19	8.000	203.20	2.776	70.51	1.947	49.45	8.74	38.87	1.67	0.29	**C0529-047-8000-S**	3.219	81.76	6.95	30.93	1.46	0.25
C0529-047-8500-M	0.529	13.44	0.047	1.19	8.500	215.90	2.946	74.82	2.064	52.42	8.74	38.87	1.57	0.28	**C0529-047-8500-S**	3.416	86.78	6.95	30.93	1.37	0.24
C0529-047-9000-M	0.529	13.44	0.047	1.19	9.000	228.60	3.115	79.13	2.181	55.39	8.74	38.87	1.49	0.26	**C0529-047-9000-S**	3.614	91.80	6.95	30.93	1.29	0.23
C0529-047-9500-M	0.529	13.44	0.047	1.19	9.500	241.30	3.285	83.43	2.297	58.35	8.74	38.87	1.41	0.25	**C0529-047-9500-S**	3.812	96.82	6.95	30.93	1.22	0.21
C0529-049-0938-M	0.529	13.44	0.049	1.25	0.938	23.81	0.396	10.06	0.316	8.02	9.81	43.66	18.13	3.17	**C0529-049-0938-S**	0.442	11.23	7.81	34.74	15.76	2.76
C0529-049-1000-M	0.529	13.44	0.049	1.25	1.000	25.40	0.418	10.62	0.331	8.42	9.81	43.66	16.87	2.95	**C0529-049-1000-S**	0.468	11.88	7.81	34.74	14.67	2.57
C0529-049-1125-M	0.529	13.44	0.049	1.25	1.125	28.58	0.463	11.75	0.363	9.22	9.81	43.66	14.82	2.59	**C0529-049-1125-S**	0.519	13.18	7.81	34.74	12.89	2.25
C0529-049-1250-M	0.529	13.44	0.049	1.25	1.250	31.75	0.507	12.88	0.395	10.03	9.81	43.66	13.21	2.31	**C0529-049-1250-S**	0.570	14.48	7.81	34.74	11.49	2.01
C0529-049-1375-M	0.529	13.44	0.049	1.25	1.375	34.93	0.551	14.01	0.426	10.83	9.81	43.66	11.92	2.09	**C0529-049-1375-S**	0.621	15.78	7.81	34.74	10.36	1.81
C0529-049-1500-M	0.529	13.44	0.049	1.25	1.500	38.10	0.596	15.13	0.458	11.64	9.81	43.66	10.85	1.90	**C0529-049-1500-S**	0.673	17.08	7.81	34.74	9.44	1.65
C0529-049-1625-M	0.529	13.44	0.049	1.25	1.625	41.28	0.640	16.26	0.490	12.44	9.81	43.66	9.97	1.74	**C0529-049-1625-S**	0.724	18.38	7.81	34.74	8.67	1.52
C0529-049-1750-M	0.529	13.44	0.049	1.25	1.750	44.45	0.685	17.39	0.521	13.24	9.81	43.66	9.21	1.61	**C0529-049-1750-S**	0.775	19.68	7.81	34.74	8.01	1.40
C0529-049-1875-M	0.529	13.44	0.049	1.25	1.875	47.63	0.729	18.52	0.553	14.05	9.81	43.66	8.56	1.50	**C0529-049-1875-S**	0.826	20.99	7.81	34.74	7.45	1.30
C0529-049-2000-M	0.529	13.44	0.049	1.25	2.000	50.80	0.773	19.64	0.585	14.85	9.81	43.66	8.00	1.40	**C0529-049-2000-S**	0.877	22.29	7.81	34.74	6.96	1.22
C0529-049-2125-M	0.529	13.44	0.049	1.25	2.125	53.98	0.818	20.77	0.616	15.66	9.81	43.66	7.51	1.31	**C0529-049-2125-S**	0.929	23.59	7.81	34.74	6.53	1.14
C0529-049-2250-M	0.529	13.44	0.049	1.25	2.250	57.15	0.862	21.90	0.648	16.46	9.81	43.66	7.07	1.24	**C0529-049-2250-S**	0.980	24.89	7.81	34.74	6.15	1.08
C0529-049-2375-M	0.529	13.44	0.049	1.25	2.375	60.33	0.907	23.03	0.680	17.27	9.81	43.66	6.68	1.17	**C0529-049-2375-S**	1.031	26.19	7.81	34.74	5.81	1.02
C0529-049-2500-M	0.529	13.44	0.049	1.25	2.500	63.50	0.951	24.15	0.711	18.07	9.81	43.66	6.34	1.11	**C0529-049-2500-S**	1.082	27.49	7.81	34.74	5.51	0.96
C0529-049-2625-M	0.529	13.44	0.049	1.25	2.625	66.68	0.995	25.28	0.743	18.87	9.81	43.66	6.02	1.05	**C0529-049-2625-S**	1.134	28.79	7.81	34.74	5.24	0.92

FOR INFORMATION ON ALTERNATIVE FINISHES, SEE PAGE 311

Part Numbers with an "*" are squared and not ground. **Part Numbers in bold** represent the newly expanded Associated Spring RAYMOND compression spring offering.

MUSIC WIRE															STAINLESS STEEL					
Catalog #	Outside Diameter (OD)		Wire Diameter (d)		Free Length (L) Approx		Load Length (L_1)		Solid Height (Sh) Approx		Load (P) at L_1		Spring Rate (R)		Catalog #	Load Length (L_1)		Load (P) at L_1		Spring Rate (R)	
	in	mm	in	mm	in	mm	in	mm	in	mm	lb	N	lb/in	N/mm		in	mm	lb	N	lb/in	N/mm
C0529-049-2750-M	0.529	13.44	0.049	1.25	2.750	69.85	1.040	26.41	0.775	19.68	9.81	43.66	5.74	1.00	**C0529-049-2750-S**	1.185	30.09	7.81	34.74	4.99	0.87
C0529-049-2875-M	0.529	13.44	0.049	1.25	2.875	73.03	1.084	27.54	0.806	20.48	9.81	43.66	5.48	0.96	**C0529-049-2875-S**	1.236	31.39	7.81	34.74	4.77	0.83
C0529-049-3000-M	0.529	13.44	0.049	1.25	3.000	76.20	1.128	28.66	0.838	21.29	9.81	43.66	5.24	0.92	**C0529-049-3000-S**	1.287	32.69	7.81	34.74	4.56	0.80
C0529-049-3250-M	0.529	13.44	0.049	1.25	3.250	82.55	1.217	30.92	0.901	22.90	9.81	43.66	4.83	0.84	**C0529-049-3250-S**	1.390	35.30	7.81	34.74	4.20	0.73
C0529-049-3500-M	0.529	13.44	0.049	1.25	3.500	88.90	1.306	33.17	0.965	24.50	9.81	43.66	4.47	0.78	**C0529-049-3500-S**	1.492	37.90	7.81	34.74	3.89	0.68
C0529-049-3750-M	0.529	13.44	0.049	1.25	3.750	95.25	1.395	35.43	1.028	26.11	9.81	43.66	4.17	0.73	**C0529-049-3750-S**	1.595	40.50	7.81	34.74	3.62	0.63
C0529-049-4000-M	0.529	13.44	0.049	1.25	4.000	101.60	1.484	37.68	1.091	27.72	9.81	43.66	3.90	0.68	**C0529-049-4000-S**	1.697	43.10	7.81	34.74	3.39	0.59
C0529-049-4250-M	0.529	13.44	0.049	1.25	4.250	107.95	1.572	39.94	1.155	29.33	9.81	43.66	3.67	0.64	**C0529-049-4250-S**	1.799	45.71	7.81	34.74	3.19	0.56
C0529-049-4500-M	0.529	13.44	0.049	1.25	4.500	114.30	1.661	42.19	1.218	30.94	9.81	43.66	3.46	0.60	**C0529-049-4500-S**	1.902	48.31	7.81	34.74	3.01	0.53
C0529-049-4750-M	0.529	13.44	0.049	1.25	4.750	120.65	1.750	44.45	1.281	32.55	9.81	43.66	3.27	0.57	**C0529-049-4750-S**	2.004	50.91	7.81	34.74	2.85	0.50
C0529-049-5000-M	0.529	13.44	0.049	1.25	5.000	127.00	1.839	46.70	1.345	34.16	9.81	43.66	3.10	0.54	**C0529-049-5000-S**	2.107	53.51	7.81	34.74	2.70	0.47
C0529-049-5250-M	0.529	13.44	0.049	1.25	5.250	133.35	1.927	48.96	1.408	35.77	9.81	43.66	2.95	0.52	**C0529-049-5250-S**	2.209	56.11	7.81	34.74	2.57	0.45
C0529-049-5500-M	0.529	13.44	0.049	1.25	5.500	139.70	2.016	51.21	1.471	37.37	9.81	43.66	2.82	0.49	**C0529-049-5500-S**	2.312	58.72	7.81	34.74	2.45	0.43
C0529-049-5750-M	0.529	13.44	0.049	1.25	5.750	146.05	2.105	53.47	1.535	38.98	9.81	43.66	2.69	0.47	**C0529-049-5750-S**	2.414	61.32	7.81	34.74	2.34	0.41
C0529-049-6000-M	0.529	13.44	0.049	1.25	6.000	152.40	2.194	55.72	1.598	40.59	9.81	43.66	2.58	0.45	**C0529-049-6000-S**	2.517	63.92	7.81	34.74	2.24	0.39
C0529-049-6250-M	0.529	13.44	0.049	1.25	6.250	158.75	2.282	57.98	1.661	42.20	9.81	43.66	2.47	0.43	**C0529-049-6250-S**	2.619	66.52	7.81	34.74	2.15	0.38
C0529-049-6500-M	0.529	13.44	0.049	1.25	6.500	165.10	2.371	60.23	1.725	43.81	9.81	43.66	2.38	0.42	**C0529-049-6500-S**	2.721	69.12	7.81	34.74	2.07	0.36
C0529-049-6750-M	0.529	13.44	0.049	1.25	6.750	171.45	2.460	62.48	1.788	45.42	9.81	43.66	2.29	0.40	**C0529-049-6750-S**	2.824	71.73	7.81	34.74	1.99	0.35
C0529-049-7000-M	0.529	13.44	0.049	1.25	7.000	177.80	2.549	64.74	1.851	47.03	9.81	43.66	2.21	0.39	**C0529-049-7000-S**	2.926	74.33	7.81	34.74	1.92	0.34
C0529-049-7500-M	0.529	13.44	0.049	1.25	7.500	190.50	2.726	69.25	1.978	50.24	9.81	43.66	2.06	0.36	**C0529-049-7500-S**	3.131	79.53	7.81	34.74	1.79	0.31
C0529-049-8000-M	0.529	13.44	0.049	1.25	8.000	203.20	2.904	73.76	2.105	53.46	9.81	43.66	1.93	0.34	**C0529-049-8000-S**	3.336	84.74	7.81	34.74	1.68	0.29
C0529-049-8500-M	0.529	13.44	0.049	1.25	8.500	215.90	3.081	78.27	2.231	56.68	9.81	43.66	1.81	0.32	**C0529-049-8500-S**	3.541	89.94	7.81	34.74	1.58	0.28
C0529-049-9000-M	0.529	13.44	0.049	1.25	9.000	228.60	3.259	82.78	2.358	59.90	9.81	43.66	1.71	0.30	**C0529-049-9000-S**	3.746	95.15	7.81	34.74	1.49	0.26
C0529-049-9500-M	0.529	13.44	0.049	1.25	9.500	241.30	3.437	87.29	2.485	63.11	9.81	43.66	1.62	0.28	**C0529-049-9500-S**	3.951	100.35	7.81	34.74	1.41	0.25
C0529-051-0938-M	0.529	13.44	0.051	1.30	0.938	23.81	0.412	10.47	0.335	8.52	10.97	48.80	20.88	3.65	**C0529-051-0938-S**	0.457	11.60	8.73	38.83	18.16	3.18
C0529-051-1000-M	0.529	13.44	0.051	1.30	1.000	25.40	0.435	11.06	0.353	8.95	10.97	48.80	19.43	3.40	**C0529-051-1000-S**	0.483	12.28	8.73	38.83	16.89	2.96
C0529-051-1125-M	0.529	13.44	0.051	1.30	1.125	28.58	0.482	12.24	0.387	9.82	10.97	48.80	17.06	2.98	**C0529-051-1125-S**	0.536	13.63	8.73	38.83	14.83	2.60
C0529-051-1250-M	0.529	13.44	0.051	1.30	1.250	31.75	0.528	13.42	0.421	10.69	10.97	48.80	15.20	2.66	**C0529-051-1250-S**	0.590	14.97	8.73	38.83	13.22	2.31
C0529-051-1375-M	0.529	13.44	0.051	1.30	1.375	34.93	0.575	14.59	0.455	11.56	10.97	48.80	13.71	2.40	**C0529-051-1375-S**	0.643	16.32	8.73	38.83	11.92	2.09
C0529-051-1500-M	0.529	13.44	0.051	1.30	1.500	38.10	0.621	15.77	0.489	12.43	10.97	48.80	12.48	2.18	**C0529-051-1500-S**	0.696	17.67	8.73	38.83	10.85	1.90
C0529-051-1625-M	0.529	13.44	0.051	1.30	1.625	41.28	0.667	16.95	0.523	13.29	10.97	48.80	11.46	2.00	**C0529-051-1625-S**	0.749	19.02	8.73	38.83	9.96	1.74
C0529-051-1750-M	0.529	13.44	0.051	1.30	1.750	44.45	0.714	18.13	0.558	14.16	10.97	48.80	10.59	1.85	**C0529-051-1750-S**	0.802	20.37	8.73	38.83	9.21	1.61
C0529-051-1875-M	0.529	13.44	0.051	1.30	1.875	47.63	0.760	19.31	0.592	15.03	10.97	48.80	9.84	1.72	**C0529-051-1875-S**	0.855	21.72	8.73	38.83	8.56	1.50
C0529-051-2000-M	0.529	13.44	0.051	1.30	2.000	50.80	0.807	20.49	0.626	15.90	10.97	48.80	9.19	1.61	**C0529-051-2000-S**	0.908	23.06	8.73	38.83	7.99	1.40
C0529-051-2125-M	0.529	13.44	0.051	1.30	2.125	53.98	0.853	21.67	0.660	16.76	10.97	48.80	8.62	1.51	**C0529-051-2125-S**	0.961	24.41	8.73	38.83	7.50	1.31
C0529-051-2250-M	0.529	13.44	0.051	1.30	2.250	57.15	0.899	22.85	0.694	17.63	10.97	48.80	8.12	1.42	**C0529-051-2250-S**	1.014	25.76	8.73	38.83	7.06	1.24
C0529-051-2375-M	0.529	13.44	0.051	1.30	2.375	60.33	0.946	24.02	0.728	18.50	10.97	48.80	7.68	1.34	**C0529-051-2375-S**	1.067	27.11	8.73	38.83	6.67	1.17
C0529-051-2500-M	0.529	13.44	0.051	1.30	2.500	63.50	0.992	25.20	0.762	19.37	10.97	48.80	7.28	1.27	**C0529-051-2500-S**	1.120	28.46	8.73	38.83	6.33	1.11
C0529-051-2625-M	0.529	13.44	0.051	1.30	2.625	66.68	1.039	26.38	0.797	20.23	10.97	48.80	6.92	1.21	**C0529-051-2625-S**	1.173	29.81	8.73	38.83	6.01	1.05
C0529-051-2750-M	0.529	13.44	0.051	1.30	2.750	69.85	1.085	27.56	0.831	21.10	10.97	48.80	6.59	1.15	**C0529-051-2750-S**	1.227	31.15	8.73	38.83	5.73	1.00
C0529-051-2875-M	0.529	13.44	0.051	1.30	2.875	73.03	1.131	28.74	0.865	21.97	10.97	48.80	6.29	1.10	**C0529-051-2875-S**	1.280	32.50	8.73	38.83	5.47	0.96
C0529-051-3000-M	0.529	13.44	0.051	1.30	3.000	76.20	1.178	29.92	0.899	22.84	10.97	48.80	6.02	1.05	**C0529-051-3000-S**	1.333	33.85	8.73	38.83	5.24	0.92
C0529-051-3250-M	0.529	13.44	0.051	1.30	3.250	82.55	1.271	32.28	0.967	24.57	10.97	48.80	5.54	0.97	**C0529-051-3250-S**	1.439	36.55	8.73	38.83	4.82	0.84
C0529-051-3500-M	0.529	13.44	0.051	1.30	3.500	88.90	1.363	34.63	1.036	26.31	10.97	48.80	5.13	0.90	**C0529-051-3500-S**	1.545	39.24	8.73	38.83	4.47	0.78
C0529-051-3750-M	0.529	13.44	0.051	1.30	3.750	95.25	1.456	36.99	1.104	28.04	10.97	48.80	4.78	0.84	**C0529-051-3750-S**	1.651	41.94	8.73	38.83	4.16	0.73
C0529-051-4000-M	0.529	13.44	0.051	1.30	4.000	101.60	1.549	39.35	1.172	29.78	10.97	48.80	4.48	0.78	**C0529-051-4000-S**	1.757	44.64	8.73	38.83	3.89	0.68
C0529-051-4250-M	0.529	13.44	0.051	1.30	4.250	107.95	1.642	41.71	1.241	31.52	10.97	48.80	4.21	0.74	**C0529-051-4250-S**	1.864	47.33	8.73	38.83	3.66	0.64
C0529-051-4500-M	0.529	13.44	0.051	1.30	4.500	114.30	1.735	44.06	1.309	33.25	10.97	48.80	3.97	0.69	**C0529-051-4500-S**	1.970	50.03	8.73	38.83	3.45	0.60
C0529-051-4750-M	0.529	13.44	0.051	1.30	4.750	120.65	1.828	46.42	1.377	34.99	10.97	48.80	3.75	0.66	**C0529-051-4750-S**	2.076	52.73	8.73	38.83	3.26	0.57
C0529-051-5000-M	0.529	13.44	0.051	1.30	5.000	127.00	1.920	48.78	1.446	36.72	10.97	48.80	3.56	0.62	**C0529-051-5000-S**	2.182	55.42	8.73	38.83	3.10	0.54
C0529-051-5250-M	0.529	13.44	0.051	1.30	5.250	133.35	2.013	51.13	1.514	38.46	10.97	48.80	3.39	0.59	**C0529-051-5250-S**	2.288	58.12	8.73	38.83	2.95	0.52
C0529-051-5500-M	0.529	13.44	0.051	1.30	5.500	139.70	2.106	53.49	1.582	40.19	10.97	48.80	3.23	0.57	**C0529-051-5500-S**	2.394	60.82	8.73	38.83	2.81	0.49
C0529-051-5750-M	0.529	13.44	0.051	1.30	5.750	146.05	2.199	55.85	1.651	41.93	10.97	48.80	3.09	0.54	**C0529-051-5750-S**	2.501	63.51	8.73	38.83	2.69	0.47
C0529-051-6000-M	0.529	13.44	0.051	1.30	6.000	152.40	2.292	58.21	1.719	43.66	10.97	48.80	2.96	0.52	**C0529-051-6000-S**	2.607	66.21	8.73	38.83	2.57	0.45
C0529-051-6250-M	0.529	13.44	0.051	1.30	6.250	158.75	2.384	60.56	1.787	45.40	10.97	48.80	2.84	0.50	**C0529-051-6250-S**	2.713	68.91	8.73	38.83	2.47	0.43
C0529-051-6500-M	0.529	13.44	0.051	1.30	6.500	165.10	2.477	62.92	1.856	47.14	10.97	48.80	2.73	0.48	**C0529-051-6500-S**	2.819	71.60	8.73	38.83	2.37	0.41
C0529-051-6750-M	0.529	13.44	0.051	1.30	6.750	171.45	2.570	65.28	1.924	48.87	10.97	48.80	2.62	0.46	**C0529-051-6750-S**	2.925	74.30	8.73	38.83	2.28	0.40
C0529-051-7000-M	0.529	13.44	0.051	1.30	7.000	177.80	2.663	67.64	1.992	50.61	10.97	48.80	2.53	0.44	**C0529-051-7000-S**	3.031	77.00	8.73	38.83	2.20	0.38
C0529-051-7500-M	0.529	13.44	0.051	1.30	7.500	190.50	2.848	72.35	2.129	54.08	10.97	48.80	2.36	0.41	**C0529-051-7500-S**	3.244	82.39	8.73	38.83	2.05	0.36
C0529-051-8000-M	0.529	13.44	0.051	1.30	8.000	203.20	3.034	77.07	2.266	57.55	10.97	48.80	2.21	0.39	**C0529-051-8000-S**	3.456	87.78	8.73	38.83	1.92	0.34
C0529-051-8500-M	0.529	13.44	0.051	1.30	8.500	215.90	3.220	81.78	2.402	61.02	10.97	48.80	2.08	0.36	**C0529-051-8500-S**	3.668	93.18	8.73	38.83	1.81	0.32
C0529-051-9000-M	0.529	13.44	0.051	1.30	9.000	228.60	3.405	86.50	2.539	64.49	10.97	48.80	1.96	0.34	**C0529-051-9000-S**	3.881	98.57	8.73	38.83	1.71	0.30
C0529-051-9500-M	0.529	13.44	0.051	1.30	9.500	241.30	3.591	91.21	2.676	67.96	10.97	48.80	1.86	0.32	**C0529-051-9500-S**	4.093	103.96	8.73	38.83	1.61	0.28
C0529-055-0875-M	0.529	13.44	0.055	1.40	0.875	22.23	0.419	10.65	0.356	9.04	13.53	60.18	29.69	5.20	**C0529-055-0875-S**	0.458	11.64	10.76	47.85	25.81	4.52

Part Numbers with an "*" are squared and not ground. **Part Numbers in bold** represent the newly expanded Associated Spring RAYMOND compression spring offering.

MUSIC WIRE															STAINLESS STEEL						
Catalog #	Outside Diameter (OD)		Wire Diameter (d)		Free Length (L) Approx		Load Length (L_1)		Solid Height (Sh) Approx		Load (P) at L_1		Spring Rate (R)		Catalog #	Load Length (L_1)		Load (P) at L_1		Spring Rate (R)	
	in	mm	in	mm	in	mm	in	mm	in	mm	lb	N	lb/in	N/mm		in	mm	lb	N	lb/in	N/mm
C0529-055-0938-M	0.529	13.44	0.055	1.40	0.938	23.81	0.445	11.29	0.375	9.54	13.53	60.18	27.44	4.80	**C0529-055-0938-S**	0.487	12.36	10.76	47.85	23.86	4.18
C0529-055-1000-M	0.529	13.44	0.055	1.40	1.000	25.40	0.470	11.93	0.395	10.03	13.53	60.18	25.52	4.47	**C0529-055-1000-S**	0.515	13.08	10.76	47.85	22.19	3.88
C0529-055-1125-M	0.529	13.44	0.055	1.40	1.125	28.58	0.520	13.22	0.434	11.03	13.53	60.18	22.37	3.92	**C0529-055-1125-S**	0.572	14.53	10.76	47.85	19.46	3.40
C0529-055-1250-M	0.529	13.44	0.055	1.40	1.250	31.75	0.571	14.50	0.474	12.03	13.53	60.18	19.92	3.49	**C0529-055-1250-S**	0.629	15.98	10.76	47.85	17.32	3.03
C0529-055-1375-M	0.529	13.44	0.055	1.40	1.375	34.93	0.621	15.78	0.513	13.03	13.53	60.18	17.95	3.14	**C0529-055-1375-S**	0.686	17.42	10.76	47.85	15.61	2.73
C0529-055-1500-M	0.529	13.44	0.055	1.40	1.500	38.10	0.672	17.07	0.552	14.02	13.53	60.18	16.34	2.86	**C0529-055-1500-S**	0.743	18.87	10.76	47.85	14.21	2.49
C0529-055-1625-M	0.529	13.44	0.055	1.40	1.625	41.28	0.722	18.35	0.591	15.02	13.53	60.18	14.99	2.62	**C0529-055-1625-S**	0.800	20.31	10.76	47.85	13.04	2.28
C0529-055-1750-M	0.529	13.44	0.055	1.40	1.750	44.45	0.773	19.63	0.631	16.02	13.53	60.18	13.85	2.42	**C0529-055-1750-S**	0.857	21.76	10.76	47.85	12.04	2.11
C0529-055-1875-M	0.529	13.44	0.055	1.40	1.875	47.63	0.824	20.92	0.670	17.01	13.53	60.18	12.87	2.25	**C0529-055-1875-S**	0.913	23.20	10.76	47.85	11.19	1.96
C0529-055-2000-M	0.529	13.44	0.055	1.40	2.000	50.80	0.874	22.20	0.709	18.01	13.53	60.18	12.02	2.10	**C0529-055-2000-S**	0.970	24.65	10.76	47.85	10.45	1.83
C0529-055-2125-M	0.529	13.44	0.055	1.40	2.125	53.98	0.925	23.48	0.748	19.01	13.53	60.18	11.27	1.97	**C0529-055-2125-S**	1.027	26.09	10.76	47.85	9.80	1.72
C0529-055-2250-M	0.529	13.44	0.055	1.40	2.250	57.15	0.975	24.77	0.788	20.01	13.53	60.18	10.61	1.86	**C0529-055-2250-S**	1.084	27.54	10.76	47.85	9.23	1.61
C0529-055-2375-M	0.529	13.44	0.055	1.40	2.375	60.33	1.026	26.05	0.827	21.00	13.53	60.18	10.03	1.75	**C0529-055-2375-S**	1.141	28.98	10.76	47.85	8.72	1.53
C0529-055-2500-M	0.529	13.44	0.055	1.40	2.500	63.50	1.076	27.34	0.866	22.00	13.53	60.18	9.50	1.66	**C0529-055-2500-S**	1.198	30.43	10.76	47.85	8.26	1.45
C0529-055-2625-M	0.529	13.44	0.055	1.40	2.625	66.68	1.127	28.62	0.905	23.00	13.53	60.18	9.03	1.58	**C0529-055-2625-S**	1.255	31.87	10.76	47.85	7.85	1.37
C0529-055-2750-M	0.529	13.44	0.055	1.40	2.750	69.85	1.177	29.90	0.945	24.00	13.53	60.18	8.60	1.51	**C0529-055-2750-S**	1.312	33.32	10.76	47.85	7.48	1.31
C0529-055-2875-M	0.529	13.44	0.055	1.40	2.875	73.03	1.228	31.19	0.984	24.99	13.53	60.18	8.21	1.44	**C0529-055-2875-S**	1.369	34.77	10.76	47.85	7.14	1.25
C0529-055-3000-M	0.529	13.44	0.055	1.40	3.000	76.20	1.278	32.47	1.023	25.99	13.53	60.18	7.86	1.38	**C0529-055-3000-S**	1.426	36.21	10.76	47.85	6.83	1.20
C0529-055-3250-M	0.529	13.44	0.055	1.40	3.250	82.55	1.379	35.04	1.102	27.98	13.53	60.18	7.23	1.27	**C0529-055-3250-S**	1.539	39.10	10.76	47.85	6.29	1.10
C0529-055-3500-M	0.529	13.44	0.055	1.40	3.500	88.90	1.480	37.60	1.180	29.98	13.53	60.18	6.70	1.17	**C0529-055-3500-S**	1.653	41.99	10.76	47.85	5.83	1.02
C0529-055-3750-M	0.529	13.44	0.055	1.40	3.750	95.25	1.582	40.17	1.259	31.97	13.53	60.18	6.24	1.09	**C0529-055-3750-S**	1.767	44.88	10.76	47.85	5.43	0.95
C0529-055-4000-M	0.529	13.44	0.055	1.40	4.000	101.60	1.683	42.74	1.337	33.97	13.53	60.18	5.84	1.02	**C0529-055-4000-S**	1.881	47.77	10.76	47.85	5.08	0.89
C0529-055-4250-M	0.529	13.44	0.055	1.40	4.250	107.95	1.784	45.31	1.416	35.96	13.53	60.18	5.49	0.96	**C0529-055-4250-S**	1.995	50.66	10.76	47.85	4.77	0.83
C0529-055-4500-M	0.529	13.44	0.055	1.40	4.500	114.30	1.885	47.87	1.494	37.96	13.53	60.18	5.17	0.91	**C0529-055-4500-S**	2.108	53.55	10.76	47.85	4.50	0.79
C0529-055-4750-M	0.529	13.44	0.055	1.40	4.750	120.65	1.986	50.44	1.573	39.95	13.53	60.18	4.89	0.86	**C0529-055-4750-S**	2.222	56.45	10.76	47.85	4.26	0.74
C0529-055-5000-M	0.529	13.44	0.055	1.40	5.000	127.00	2.087	53.01	1.651	41.95	13.53	60.18	4.64	0.81	**C0529-055-5000-S**	2.336	59.34	10.76	47.85	4.04	0.71
C0529-055-5250-M	0.529	13.44	0.055	1.40	5.250	133.35	2.188	55.57	1.730	43.94	13.53	60.18	4.42	0.77	**C0529-055-5250-S**	2.450	62.23	10.76	47.85	3.84	0.67
C0529-055-5500-M	0.529	13.44	0.055	1.40	5.500	139.70	2.289	58.14	1.808	45.94	13.53	60.18	4.21	0.74	**C0529-055-5500-S**	2.564	65.12	10.76	47.85	3.66	0.64
C0529-055-5750-M	0.529	13.44	0.055	1.40	5.750	146.05	2.390	60.71	1.887	47.93	13.53	60.18	4.03	0.70	**C0529-055-5750-S**	2.677	68.01	10.76	47.85	3.50	0.61
C0529-055-6000-M	0.529	13.44	0.055	1.40	6.000	152.40	2.491	63.28	1.966	49.92	13.53	60.18	3.86	0.67	**C0529-055-6000-S**	2.791	70.90	10.76	47.85	3.35	0.59
C0529-055-6250-M	0.529	13.44	0.055	1.40	6.250	158.75	2.592	65.84	2.044	51.92	13.53	60.18	3.70	0.65	**C0529-055-6250-S**	2.905	73.79	10.76	47.85	3.22	0.56
C0529-055-6500-M	0.529	13.44	0.055	1.40	6.500	165.10	2.693	68.41	2.123	53.91	13.53	60.18	3.55	0.62	**C0529-055-6500-S**	3.019	76.68	10.76	47.85	3.09	0.54
C0529-055-6750-M	0.529	13.44	0.055	1.40	6.750	171.45	2.794	70.98	2.201	55.91	13.53	60.18	3.42	0.60	**C0529-055-6750-S**	3.133	79.57	10.76	47.85	2.97	0.52
C0529-055-7000-M	0.529	13.44	0.055	1.40	7.000	177.80	2.895	73.54	2.280	57.90	13.53	60.18	3.30	0.58	**C0529-055-7000-S**	3.247	82.46	10.76	47.85	2.87	0.50
C0529-055-7500-M	0.529	13.44	0.055	1.40	7.500	190.50	3.098	78.68	2.437	61.89	13.53	60.18	3.07	0.54	**C0529-055-7500-S**	3.474	88.24	10.76	47.85	2.67	0.47
C0529-055-8000-M	0.529	13.44	0.055	1.40	8.000	203.20	3.300	83.81	2.594	65.88	13.53	60.18	2.88	0.50	**C0529-055-8000-S**	3.702	94.02	10.76	47.85	2.50	0.44
C0529-055-8500-M	0.529	13.44	0.055	1.40	8.500	215.90	3.502	88.95	2.751	69.87	13.53	60.18	2.71	0.47	**C0529-055-8500-S**	3.929	99.81	10.76	47.85	2.35	0.41
C0529-055-9000-M	0.529	13.44	0.055	1.40	9.000	228.60	3.704	94.08	2.908	73.86	13.53	60.18	2.56	0.45	**C0529-055-9000-S**	4.157	105.59	10.76	47.85	2.22	0.39
C0529-059-0875-M	0.529	13.44	0.059	1.50	0.875	22.23	0.449	11.42	0.393	9.98	16.43	73.10	38.61	6.76	**C0529-059-0875-S**	0.486	12.35	13.05	58.07	33.58	5.88
C0529-059-0938-M	0.529	13.44	0.059	1.50	0.938	23.81	0.477	12.11	0.415	10.55	16.43	73.10	35.67	6.24	**C0529-059-0938-S**	0.517	13.12	13.05	58.07	31.02	5.43
C0529-059-1000-M	0.529	13.44	0.059	1.50	1.000	25.40	0.504	12.81	0.438	11.11	16.43	73.10	33.14	5.80	**C0529-059-1000-S**	0.547	13.89	13.05	58.07	28.82	5.04
C0529-059-1125-M	0.529	13.44	0.059	1.50	1.125	28.58	0.559	14.20	0.482	12.24	16.43	73.10	29.03	5.08	**C0529-059-1125-S**	0.608	15.44	13.05	58.07	25.24	4.42
C0529-059-1250-M	0.529	13.44	0.059	1.50	1.250	31.75	0.614	15.59	0.526	13.37	16.43	73.10	25.82	4.52	**C0529-059-1250-S**	0.669	16.98	13.05	58.07	22.45	3.93
C0529-059-1375-M	0.529	13.44	0.059	1.50	1.375	34.93	0.668	16.98	0.571	14.50	16.43	73.10	23.26	4.07	**C0529-059-1375-S**	0.729	18.53	13.05	58.07	20.22	3.54
C0529-059-1500-M	0.529	13.44	0.059	1.50	1.500	38.10	0.723	18.37	0.615	15.63	16.43	73.10	21.15	3.70	**C0529-059-1500-S**	0.790	20.07	13.05	58.07	18.39	3.22
C0529-059-1625-M	0.529	13.44	0.059	1.50	1.625	41.28	0.778	19.76	0.660	16.76	16.43	73.10	19.40	3.39	**C0529-059-1625-S**	0.851	21.62	13.05	58.07	16.87	2.95
C0529-059-1750-M	0.529	13.44	0.059	1.50	1.750	44.45	0.833	21.15	0.704	17.89	16.43	73.10	17.91	3.13	**C0529-059-1750-S**	0.912	23.16	13.05	58.07	15.58	2.73
C0529-059-1875-M	0.529	13.44	0.059	1.50	1.875	47.63	0.887	22.54	0.749	19.02	16.43	73.10	16.64	2.91	**C0529-059-1875-S**	0.973	24.71	13.05	58.07	14.47	2.53
C0529-059-2000-M	0.529	13.44	0.059	1.50	2.000	50.80	0.942	23.93	0.793	20.14	16.43	73.10	15.53	2.72	**C0529-059-2000-S**	1.033	26.25	13.05	58.07	13.51	2.36
C0529-059-2125-M	0.529	13.44	0.059	1.50	2.125	53.98	0.997	25.32	0.838	21.27	16.43	73.10	14.57	2.55	**C0529-059-2125-S**	1.094	27.79	13.05	58.07	12.67	2.22
C0529-059-2250-M	0.529	13.44	0.059	1.50	2.250	57.15	1.051	26.71	0.882	22.40	16.43	73.10	13.71	2.40	**C0529-059-2250-S**	1.155	29.34	13.05	58.07	11.92	2.09
C0529-059-2375-M	0.529	13.44	0.059	1.50	2.375	60.33	1.106	28.10	0.926	23.53	16.43	73.10	12.95	2.27	**C0529-059-2375-S**	1.216	30.88	13.05	58.07	11.26	1.97
C0529-059-2500-M	0.529	13.44	0.059	1.50	2.500	63.50	1.161	29.49	0.971	24.66	16.43	73.10	12.27	2.15	**C0529-059-2500-S**	1.277	32.43	13.05	58.07	10.67	1.87
C0529-059-2625-M	0.529	13.44	0.059	1.50	2.625	66.68	1.216	30.88	1.015	25.79	16.43	73.10	11.66	2.04	**C0529-059-2625-S**	1.337	33.97	13.05	58.07	10.14	1.77
C0529-059-2750-M	0.529	13.44	0.059	1.50	2.750	69.85	1.270	32.27	1.060	26.92	16.43	73.10	11.11	1.94	**C0529-059-2750-S**	1.398	35.52	13.05	58.07	9.66	1.69
C0529-059-2875-M	0.529	13.44	0.059	1.50	2.875	73.03	1.325	33.66	1.104	28.05	16.43	73.10	10.60	1.86	**C0529-059-2875-S**	1.459	37.06	13.05	58.07	9.22	1.61
C0529-059-3000-M	0.529	13.44	0.059	1.50	3.000	76.20	1.380	35.05	1.149	29.18	16.43	73.10	10.14	1.78	**C0529-059-3000-S**	1.520	38.61	13.05	58.07	8.82	1.54
C0529-059-3250-M	0.529	13.44	0.059	1.50	3.250	82.55	1.489	37.83	1.238	31.43	16.43	73.10	9.33	1.63	**C0529-059-3250-S**	1.642	41.69	13.05	58.07	8.12	1.42
C0529-059-3500-M	0.529	13.44	0.059	1.50	3.500	88.90	1.599	40.61	1.326	33.69	16.43	73.10	8.64	1.51	**C0529-059-3500-S**	1.763	44.78	13.05	58.07	7.52	1.32
C0529-059-3750-M	0.529	13.44	0.059	1.50	3.750	95.25	1.708	43.39	1.415	35.95	16.43	73.10	8.05	1.41	**C0529-059-3750-S**	1.885	47.87	13.05	58.07	7.00	1.22
C0529-059-4000-M	0.529	13.44	0.059	1.50	4.000	101.60	1.818	46.17	1.504	38.21	16.43	73.10	7.53	1.32	**C0529-059-4000-S**	2.006	50.96	13.05	58.07	6.55	1.15
C0529-059-4250-M	0.529	13.44	0.059	1.50	4.250	107.95	1.927	48.95	1.593	40.46	16.43	73.10	7.07	1.24	**C0529-059-4250-S**	2.128	54.05	13.05	58.07	6.15	1.08
C0529-059-4500-M	0.529	13.44	0.059	1.50	4.500	114.30	2.037	51.73	1.682	42.72	16.43	73.10	6.67	1.17	**C0529-059-4500-S**	2.250	57.14	13.05	58.07	5.80	1.02
C0529-059-4750-M	0.529	13.44	0.059	1.50	4.750	120.65	2.146	54.51	1.771	44.98	16.43	73.10	6.31	1.10	**C0529-059-4750-S**	2.371	60.23	13.05	58.07	5.49	0.96

FOR INFORMATION ON ALTERNATIVE FINISHES, SEE PAGE 311

Part Numbers with an "*" are squared and not ground. **Part Numbers in bold** represent the newly expanded Associated Spring RAYMOND compression spring offering.

(OD) 0.529 - 0.529

MUSIC WIRE															STAINLESS STEEL					
Catalog #	Outside Diameter (OD)		Wire Diameter (d)		Free Length (L) Approx		Load Length (L_1)		Solid Height (Sh) Approx		Load (P) at L_1		Spring Rate (R)		Catalog #	Load Length (L_1)		Load (P) at L_1		Spring Rate (R)	
	in	mm	in	mm	in	mm	in	mm	in	mm	lb	N	lb/in	N/mm		in	mm	lb	N	lb/in	N/mm
C0529-059-5000-M	**0.529**	**13.44**	**0.059**	**1.50**	**5.000**	**127.00**	**2.256**	**57.29**	**1.860**	**47.24**	**16.43**	**73.10**	**5.99**	**1.05**	**C0529-059-5000-S**	**2.493**	**63.32**	**13.05**	**58.07**	**5.21**	**0.91**
C0529-059-5250-M	**0.529**	**13.44**	**0.059**	**1.50**	**5.250**	**133.35**	**2.365**	**60.07**	**1.949**	**49.50**	**16.43**	**73.10**	**5.70**	**1.00**	**C0529-059-5250-S**	**2.614**	**66.41**	**13.05**	**58.07**	**4.95**	**0.87**
C0529-059-5500-M	**0.529**	**13.44**	**0.059**	**1.50**	**5.500**	**139.70**	**2.474**	**62.85**	**2.038**	**51.75**	**16.43**	**73.10**	**5.43**	**0.95**	**C0529-059-5500-S**	**2.736**	**69.49**	**13.05**	**58.07**	**4.72**	**0.83**
C0529-059-5750-M	**0.529**	**13.44**	**0.059**	**1.50**	**5.750**	**146.05**	**2.584**	**65.63**	**2.126**	**54.01**	**16.43**	**73.10**	**5.19**	**0.91**	**C0529-059-5750-S**	**2.858**	**72.58**	**13.05**	**58.07**	**4.51**	**0.79**
C0529-059-6000-M	**0.529**	**13.44**	**0.059**	**1.50**	**6.000**	**152.40**	**2.693**	**68.41**	**2.215**	**56.27**	**16.43**	**73.10**	**4.97**	**0.87**	**C0529-059-6000-S**	**2.979**	**75.67**	**13.05**	**58.07**	**4.32**	**0.76**
C0529-059-6250-M	**0.529**	**13.44**	**0.059**	**1.50**	**6.250**	**158.75**	**2.803**	**71.19**	**2.304**	**58.53**	**16.43**	**73.10**	**4.77**	**0.83**	**C0529-059-6250-S**	**3.101**	**78.76**	**13.05**	**58.07**	**4.15**	**0.73**
C0529-059-6500-M	**0.529**	**13.44**	**0.059**	**1.50**	**6.500**	**165.10**	**2.912**	**73.97**	**2.393**	**60.79**	**16.43**	**73.10**	**4.58**	**0.80**	**C0529-059-6500-S**	**3.222**	**81.85**	**13.05**	**58.07**	**3.98**	**0.70**
C0529-059-6750-M	**0.529**	**13.44**	**0.059**	**1.50**	**6.750**	**171.45**	**3.022**	**76.75**	**2.482**	**63.04**	**16.43**	**73.10**	**4.41**	**0.77**	**C0529-059-6750-S**	**3.344**	**84.94**	**13.05**	**58.07**	**3.83**	**0.67**
C0529-059-7000-M	**0.529**	**13.44**	**0.059**	**1.50**	**7.000**	**177.80**	**3.131**	**79.53**	**2.571**	**65.30**	**16.43**	**73.10**	**4.25**	**0.74**	**C0529-059-7000-S**	**3.466**	**88.03**	**13.05**	**58.07**	**3.69**	**0.65**
C0529-059-7500-M	**0.529**	**13.44**	**0.059**	**1.50**	**7.500**	**190.50**	**3.350**	**85.09**	**2.749**	**69.82**	**16.43**	**73.10**	**3.96**	**0.69**	**C0529-059-7500-S**	**3.709**	**94.21**	**13.05**	**58.07**	**3.44**	**0.60**
C0529-059-8000-M	**0.529**	**13.44**	**0.059**	**1.50**	**8.000**	**203.20**	**3.569**	**90.65**	**2.926**	**74.33**	**16.43**	**73.10**	**3.71**	**0.65**	**C0529-059-8000-S**	**3.952**	**100.38**	**13.05**	**58.07**	**3.23**	**0.56**
C0529-059-8500-M	**0.529**	**13.44**	**0.059**	**1.50**	**8.500**	**215.90**	**3.788**	**96.21**	**3.104**	**78.85**	**16.43**	**73.10**	**3.49**	**0.61**	**C0529-059-8500-S**	**4.195**	**106.56**	**13.05**	**58.07**	**3.03**	**0.53**
C0529-059-9000-M	**0.529**	**13.44**	**0.059**	**1.50**	**9.000**	**228.60**	**4.007**	**101.77**	**3.282**	**83.36**	**16.43**	**73.10**	**3.29**	**0.58**	**C0529-059-9000-S**	**4.439**	**112.74**	**13.05**	**58.07**	**2.86**	**0.50**
C0529-063-0813-M	0.529	13.44	0.063	1.60	0.813	20.64	0.450	11.42	0.405	10.29	19.70	87.61	54.29	9.50	C0529-063-0813-S	0.481	12.23	15.63	69.51	47.21	8.26
C0529-063-0875-M	0.529	13.44	0.063	1.60	0.875	22.23	0.479	12.17	0.430	10.92	19.70	87.61	49.76	8.71	C0529-063-0875-S	0.514	13.05	15.63	69.51	43.27	7.57
C0529-063-0938-M	0.529	13.44	0.063	1.60	0.938	23.81	0.509	12.92	0.455	11.55	19.70	87.61	45.93	8.04	C0529-063-0938-S	0.546	13.87	15.63	69.51	39.94	6.99
C0529-063-1000-M	0.529	13.44	0.063	1.60	1.000	25.40	0.538	13.67	0.479	12.18	19.70	87.61	42.64	7.46	C0529-063-1000-S	0.579	14.70	15.63	69.51	37.08	6.49
C0529-063-1125-M	0.529	13.44	0.063	1.60	1.125	28.58	0.597	15.17	0.529	13.44	19.70	87.61	37.31	6.53	C0529-063-1125-S	0.643	16.34	15.63	69.51	32.44	5.68
C0529-063-1250-M	0.529	13.44	0.063	1.60	1.250	31.75	0.656	16.66	0.579	14.70	19.70	87.61	33.16	5.80	C0529-063-1250-S	0.708	17.98	15.63	69.51	28.83	5.05
C0529-063-1375-M	0.529	13.44	0.063	1.60	1.375	34.93	0.715	18.16	0.628	15.96	19.70	87.61	29.84	5.22	C0529-063-1375-S	0.773	19.63	15.63	69.51	25.95	4.54
C0529-063-1500-M	0.529	13.44	0.063	1.60	1.500	38.10	0.774	19.66	0.678	17.22	19.70	87.61	27.13	4.75	C0529-063-1500-S	0.837	21.27	15.63	69.51	23.59	4.13
C0529-063-1625-M	0.529	13.44	0.063	1.60	1.625	41.28	0.833	21.15	0.728	18.48	19.70	87.61	24.86	4.35	C0529-063-1625-S	0.902	22.92	15.63	69.51	21.62	3.78
C0529-063-1750-M	0.529	13.44	0.063	1.60	1.750	44.45	0.892	22.65	0.777	19.74	19.70	87.61	22.95	4.02	C0529-063-1750-S	0.967	24.56	15.63	69.51	19.96	3.49
C0529-063-1875-M	0.529	13.44	0.063	1.60	1.875	47.63	0.951	24.15	0.827	21.00	19.70	87.61	21.31	3.73	C0529-063-1875-S	1.032	26.20	15.63	69.51	18.53	3.24
C0529-063-2000-M	0.529	13.44	0.063	1.60	2.000	50.80	1.010	25.64	0.877	22.27	19.70	87.61	19.89	3.48	C0529-063-2000-S	1.096	27.85	15.63	69.51	17.29	3.03
C0529-063-2125-M	0.529	13.44	0.063	1.60	2.125	53.98	1.069	27.14	0.926	23.53	19.70	87.61	18.64	3.26	C0529-063-2125-S	1.161	29.49	15.63	69.51	16.21	2.84
C0529-063-2250-M	0.529	13.44	0.063	1.60	2.250	57.15	1.128	28.64	0.976	24.79	19.70	87.61	17.55	3.07	C0529-063-2250-S	1.226	31.14	15.63	69.51	15.26	2.67
C0529-063-2375-M	0.529	13.44	0.063	1.60	2.375	60.33	1.186	30.14	1.026	26.05	19.70	87.61	16.57	2.90	C0529-063-2375-S	1.291	32.78	15.63	69.51	14.41	2.52
C0529-063-2500-M	0.529	13.44	0.063	1.60	2.500	63.50	1.245	31.63	1.075	27.31	19.70	87.61	15.70	2.75	C0529-063-2500-S	1.355	34.43	15.63	69.51	13.65	2.39
C0529-063-2625-M	0.529	13.44	0.063	1.60	2.625	66.68	1.304	33.13	1.125	28.57	19.70	87.61	14.91	2.61	C0529-063-2625-S	1.420	36.07	15.63	69.51	12.97	2.27
C0529-063-2750-M	0.529	13.44	0.063	1.60	2.750	69.85	1.363	34.63	1.174	29.83	19.70	87.61	14.20	2.49	C0529-063-2750-S	1.485	37.71	15.63	69.51	12.35	2.16
C0529-063-2875-M	0.529	13.44	0.063	1.60	2.875	73.03	1.422	36.12	1.224	31.09	19.70	87.61	13.56	2.37	C0529-063-2875-S	1.550	39.36	15.63	69.51	11.79	2.06
C0529-063-3000-M	0.529	13.44	0.063	1.60	3.000	76.20	1.481	37.62	1.274	32.35	19.70	87.61	12.97	2.27	C0529-063-3000-S	1.614	41.00	15.63	69.51	11.28	1.97
C0529-063-3250-M	0.529	13.44	0.063	1.60	3.250	82.55	1.599	40.62	1.373	34.88	19.70	87.61	11.93	2.09	C0529-063-3250-S	1.744	44.29	15.63	69.51	10.37	1.82
C0529-063-3500-M	0.529	13.44	0.063	1.60	3.500	88.90	1.717	43.61	1.472	37.40	19.70	87.61	11.05	1.93	C0529-063-3500-S	1.873	47.58	15.63	69.51	9.61	1.68
C0529-063-3750-M	0.529	13.44	0.063	1.60	3.750	95.25	1.835	46.60	1.572	39.92	19.70	87.61	10.28	1.80	C0529-063-3750-S	2.003	50.87	15.63	69.51	8.94	1.57
C0529-063-4000-M	0.529	13.44	0.063	1.60	4.000	101.60	1.953	49.60	1.671	42.44	19.70	87.61	9.62	1.68	C0529-063-4000-S	2.132	54.15	15.63	69.51	8.37	1.46
C0529-063-4250-M	0.529	13.44	0.063	1.60	4.250	107.95	2.071	52.59	1.770	44.96	19.70	87.61	9.04	1.58	C0529-063-4250-S	2.262	57.44	15.63	69.51	7.86	1.38
C0529-063-4500-M	0.529	13.44	0.063	1.60	4.500	114.30	2.188	55.59	1.870	47.49	19.70	87.61	8.52	1.49	C0529-063-4500-S	2.391	60.73	15.63	69.51	7.41	1.30
C0529-063-4750-M	0.529	13.44	0.063	1.60	4.750	120.65	2.306	58.58	1.969	50.01	19.70	87.61	8.06	1.41	C0529-063-4750-S	2.520	64.02	15.63	69.51	7.01	1.23
C0529-063-5000-M	0.529	13.44	0.063	1.60	5.000	127.00	2.424	61.57	2.068	52.53	19.70	87.61	7.65	1.34	C0529-063-5000-S	2.650	67.31	15.63	69.51	6.65	1.16
C0529-063-5250-M	0.529	13.44	0.063	1.60	5.250	133.35	2.542	64.57	2.167	55.05	19.70	87.61	7.27	1.27	C0529-063-5250-S	2.779	70.60	15.63	69.51	6.33	1.11
C0529-063-5500-M	0.529	13.44	0.063	1.60	5.500	139.70	2.660	67.56	2.267	57.57	19.70	87.61	6.94	1.21	C0529-063-5500-S	2.909	73.88	15.63	69.51	6.03	1.06
C0529-063-5750-M	0.529	13.44	0.063	1.60	5.750	146.05	2.778	70.56	2.366	60.10	19.70	87.61	6.63	1.16	C0529-063-5750-S	3.038	77.17	15.63	69.51	5.76	1.01
C0529-063-6000-M	0.529	13.44	0.063	1.60	6.000	152.40	2.896	73.55	2.465	62.62	19.70	87.61	6.35	1.11	C0529-063-6000-S	3.168	80.46	15.63	69.51	5.52	0.97
C0529-063-6250-M	0.529	13.44	0.063	1.60	6.250	158.75	3.014	76.55	2.565	65.14	19.70	87.61	6.09	1.07	C0529-063-6250-S	3.297	83.75	15.63	69.51	5.29	0.93
C0529-063-6500-M	0.529	13.44	0.063	1.60	6.500	165.10	3.131	79.54	2.664	67.66	19.70	87.61	5.85	1.02	C0529-063-6500-S	3.427	87.04	15.63	69.51	5.09	0.89
C0529-063-6750-M	0.529	13.44	0.063	1.60	6.750	171.45	3.249	82.53	2.763	70.18	19.70	87.61	5.63	0.98	C0529-063-6750-S	3.556	90.33	15.63	69.51	4.89	0.86
C0529-063-7000-M	0.529	13.44	0.063	1.60	7.000	177.80	3.367	85.53	2.862	72.71	19.70	87.61	5.42	0.95	C0529-063-7000-S	3.686	93.61	15.63	69.51	4.72	0.83
C0529-063-7500-M	0.529	13.44	0.063	1.60	7.500	190.50	3.603	91.52	3.061	77.75	19.70	87.61	5.05	0.88	C0529-063-7500-S	3.944	100.19	15.63	69.51	4.40	0.77
C0529-063-8000-M	0.529	13.44	0.063	1.60	8.000	203.20	3.839	97.50	3.260	82.79	19.70	87.61	4.73	0.83	C0529-063-8000-S	4.203	106.77	15.63	69.51	4.12	0.72
C0529-063-8500-M	0.529	13.44	0.063	1.60	8.500	215.90	4.075	103.49	3.458	87.84	19.70	87.61	4.45	0.78	C0529-063-8500-S	4.462	113.34	15.63	69.51	3.87	0.68
C0529-063-9000-M	0.529	13.44	0.063	1.60	9.000	228.60	4.310	109.48	3.657	92.88	19.70	87.61	4.20	0.74	C0529-063-9000-S	4.721	119.92	15.63	69.51	3.65	0.64
C0529-068-0813-M	**0.529**	**13.44**	**0.068**	**1.73**	**0.813**	**20.64**	**0.483**	**12.27**	**0.446**	**11.34**	**24.31**	**108.12**	**73.80**	**12.92**	**C0529-068-0813-S**	**0.513**	**13.02**	**19.25**	**85.61**	**64.18**	**11.23**
C0529-068-0875-M	**0.529**	**13.44**	**0.068**	**1.73**	**0.875**	**22.23**	**0.515**	**13.09**	**0.474**	**12.05**	**24.31**	**108.12**	**67.56**	**11.82**	**C0529-068-0875-S**	**0.547**	**13.90**	**19.25**	**85.61**	**58.75**	**10.28**
C0529-068-0938-M	**0.529**	**13.44**	**0.068**	**1.73**	**0.938**	**23.81**	**0.547**	**13.90**	**0.502**	**12.76**	**24.31**	**108.12**	**62.29**	**10.90**	**C0529-068-0938-S**	**0.582**	**14.79**	**19.25**	**85.61**	**54.17**	**9.48**
C0529-068-1000-M	**0.529**	**13.44**	**0.068**	**1.73**	**1.000**	**25.40**	**0.579**	**14.72**	**0.530**	**13.47**	**24.31**	**108.12**	**57.79**	**10.11**	**C0529-068-1000-S**	**0.617**	**15.67**	**19.25**	**85.61**	**50.25**	**8.79**
C0529-068-1125-M	**0.529**	**13.44**	**0.068**	**1.73**	**1.125**	**28.58**	**0.644**	**16.35**	**0.587**	**14.90**	**24.31**	**108.12**	**50.48**	**8.83**	**C0529-068-1125-S**	**0.687**	**17.44**	**19.25**	**85.61**	**43.90**	**7.68**
C0529-068-1250-M	**0.529**	**13.44**	**0.068**	**1.73**	**1.250**	**31.75**	**0.708**	**17.98**	**0.643**	**16.32**	**24.31**	**108.12**	**44.82**	**7.84**	**C0529-068-1250-S**	**0.756**	**19.21**	**19.25**	**85.61**	**38.97**	**6.82**
C0529-068-1375-M	**0.529**	**13.44**	**0.068**	**1.73**	**1.375**	**34.93**	**0.772**	**19.60**	**0.699**	**17.75**	**24.31**	**108.12**	**40.30**	**7.05**	**C0529-068-1375-S**	**0.826**	**20.97**	**19.25**	**85.61**	**35.04**	**6.13**
C0529-068-1500-M	**0.529**	**13.44**	**0.068**	**1.73**	**1.500**	**38.10**	**0.836**	**21.23**	**0.755**	**19.17**	**24.31**	**108.12**	**36.60**	**6.41**	**C0529-068-1500-S**	**0.895**	**22.74**	**19.25**	**85.61**	**31.83**	**5.57**
C0529-068-1625-M	**0.529**	**13.44**	**0.068**	**1.73**	**1.625**	**41.28**	**0.900**	**22.86**	**0.811**	**20.59**	**24.31**	**108.12**	**33.53**	**5.87**	**C0529-068-1625-S**	**0.965**	**24.51**	**19.25**	**85.61**	**29.16**	**5.10**
C0529-068-1750-M	**0.529**	**13.44**	**0.068**	**1.73**	**1.750**	**44.45**	**0.964**	**24.49**	**0.867**	**22.02**	**24.31**	**108.12**	**30.93**	**5.41**	**C0529-068-1750-S**	**1.035**	**26.28**	**19.25**	**85.61**	**26.90**	**4.71**
C0529-068-1875-M	**0.529**	**13.44**	**0.068**	**1.73**	**1.875**	**47.63**	**1.028**	**26.12**	**0.923**	**23.44**	**24.31**	**108.12**	**28.71**	**5.02**	**C0529-068-1875-S**	**1.104**	**28.04**	**19.25**	**85.61**	**24.97**	**4.37**

Part Numbers with an "*" are squared and not ground. **Part Numbers in bold** represent the newly expanded Associated Spring RAYMOND compression spring offering.

MUSIC WIRE

Catalog #	Outside Diameter (OD)		Wire Diameter (d)		Free Length (L) Approx		Load Length (L_1)		Solid Height (Sh) Approx		Load (P) at L_1		Spring Rate (R)	
	in	mm	in	mm	in	mm	in	mm	in	mm	lb	N	lb/in	N/mm
C0529-068-2000-M	**0.529**	**13.44**	**0.068**	**1.73**	**2.000**	**50.80**	**1.093**	**27.75**	**0.979**	**24.87**	**24.31**	**108.12**	**26.79**	**4.69**
C0529-068-2125-M	**0.529**	**13.44**	**0.068**	**1.73**	**2.125**	**53.98**	**1.157**	**29.38**	**1.035**	**26.29**	**24.31**	**108.12**	**25.10**	**4.39**
C0529-068-2250-M	**0.529**	**13.44**	**0.068**	**1.73**	**2.250**	**57.15**	**1.221**	**31.01**	**1.091**	**27.72**	**24.31**	**108.12**	**23.62**	**4.13**
C0529-068-2375-M	**0.529**	**13.44**	**0.068**	**1.73**	**2.375**	**60.33**	**1.285**	**32.64**	**1.147**	**29.14**	**24.31**	**108.12**	**22.30**	**3.90**
C0529-068-2500-M	**0.529**	**13.44**	**0.068**	**1.73**	**2.500**	**63.50**	**1.349**	**34.27**	**1.203**	**30.57**	**24.31**	**108.12**	**21.12**	**3.70**
C0529-068-2625-M	**0.529**	**13.44**	**0.068**	**1.73**	**2.625**	**66.68**	**1.413**	**35.90**	**1.259**	**31.99**	**24.31**	**108.12**	**20.06**	**3.51**
C0529-068-2750-M	**0.529**	**13.44**	**0.068**	**1.73**	**2.750**	**69.85**	**1.477**	**37.53**	**1.316**	**33.41**	**24.31**	**108.12**	**19.10**	**3.34**
C0529-068-2875-M	**0.529**	**13.44**	**0.068**	**1.73**	**2.875**	**73.03**	**1.542**	**39.16**	**1.372**	**34.84**	**24.31**	**108.12**	**18.23**	**3.19**
C0529-068-3000-M	**0.529**	**13.44**	**0.068**	**1.73**	**3.000**	**76.20**	**1.606**	**40.79**	**1.428**	**36.26**	**24.31**	**108.12**	**17.43**	**3.05**
C0529-068-3250-M	**0.529**	**13.44**	**0.068**	**1.73**	**3.250**	**82.55**	**1.734**	**44.05**	**1.540**	**39.11**	**24.31**	**108.12**	**16.03**	**2.81**
C0529-068-3500-M	**0.529**	**13.44**	**0.068**	**1.73**	**3.500**	**88.90**	**1.862**	**47.30**	**1.652**	**41.96**	**24.31**	**108.12**	**14.84**	**2.60**
C0529-068-3750-M	**0.529**	**13.44**	**0.068**	**1.73**	**3.750**	**95.25**	**1.991**	**50.56**	**1.764**	**44.81**	**24.31**	**108.12**	**13.82**	**2.42**
C0529-068-4000-M	**0.529**	**13.44**	**0.068**	**1.73**	**4.000**	**101.60**	**2.119**	**53.82**	**1.876**	**47.66**	**24.31**	**108.12**	**12.92**	**2.26**
C0529-068-4250-M	**0.529**	**13.44**	**0.068**	**1.73**	**4.250**	**107.95**	**2.247**	**57.08**	**1.989**	**50.51**	**24.31**	**108.12**	**12.14**	**2.12**
C0529-068-4500-M	**0.529**	**13.44**	**0.068**	**1.73**	**4.500**	**114.30**	**2.376**	**60.34**	**2.101**	**53.36**	**24.31**	**108.12**	**11.44**	**2.00**
C0529-068-4750-M	**0.529**	**13.44**	**0.068**	**1.73**	**4.750**	**120.65**	**2.504**	**63.60**	**2.213**	**56.21**	**24.31**	**108.12**	**10.82**	**1.89**
C0529-068-5000-M	**0.529**	**13.44**	**0.068**	**1.73**	**5.000**	**127.00**	**2.632**	**66.86**	**2.325**	**59.05**	**24.31**	**108.12**	**10.27**	**1.80**
C0529-068-5250-M	**0.529**	**13.44**	**0.068**	**1.73**	**5.250**	**133.35**	**2.760**	**70.11**	**2.437**	**61.90**	**24.31**	**108.12**	**9.76**	**1.71**
C0529-068-5500-M	**0.529**	**13.44**	**0.068**	**1.73**	**5.500**	**139.70**	**2.889**	**73.37**	**2.549**	**64.75**	**24.31**	**108.12**	**9.31**	**1.63**
C0529-068-5750-M	**0.529**	**13.44**	**0.068**	**1.73**	**5.750**	**146.05**	**3.017**	**76.63**	**2.661**	**67.60**	**24.31**	**108.12**	**8.89**	**1.56**
C0529-068-6000-M	**0.529**	**13.44**	**0.068**	**1.73**	**6.000**	**152.40**	**3.145**	**79.89**	**2.774**	**70.45**	**24.31**	**108.12**	**8.51**	**1.49**
C0529-068-6250-M	**0.529**	**13.44**	**0.068**	**1.73**	**6.250**	**158.75**	**3.274**	**83.15**	**2.886**	**73.30**	**24.31**	**108.12**	**8.17**	**1.43**
C0529-068-6500-M	**0.529**	**13.44**	**0.068**	**1.73**	**6.500**	**165.10**	**3.402**	**86.41**	**2.998**	**76.15**	**24.31**	**108.12**	**7.85**	**1.37**
C0529-068-6750-M	**0.529**	**13.44**	**0.068**	**1.73**	**6.750**	**171.45**	**3.530**	**89.67**	**3.110**	**79.00**	**24.31**	**108.12**	**7.55**	**1.32**
C0529-068-7000-M	**0.529**	**13.44**	**0.068**	**1.73**	**7.000**	**177.80**	**3.658**	**92.93**	**3.222**	**81.85**	**24.31**	**108.12**	**7.27**	**1.27**
C0529-068-7500-M	**0.529**	**13.44**	**0.068**	**1.73**	**7.500**	**190.50**	**3.915**	**99.44**	**3.447**	**87.54**	**24.31**	**108.12**	**6.78**	**1.19**
C0529-068-8000-M	**0.529**	**13.44**	**0.068**	**1.73**	**8.000**	**203.20**	**4.172**	**105.96**	**3.671**	**93.24**	**24.31**	**108.12**	**6.35**	**1.11**
C0529-068-8500-M	**0.529**	**13.44**	**0.068**	**1.73**	**8.500**	**215.90**	**4.428**	**112.48**	**3.895**	**98.94**	**24.31**	**108.12**	**5.97**	**1.04**
C0529-068-9000-M	**0.529**	**13.44**	**0.068**	**1.73**	**9.000**	**228.60**	**4.685**	**119.00**	**4.120**	**104.64**	**24.31**	**108.12**	**5.63**	**0.99**
C0529-072-0813-M	**0.529**	**13.44**	**0.072**	**1.83**	**0.813**	**20.64**	**0.509**	**12.92**	**0.478**	**12.14**	**28.43**	**126.47**	**93.63**	**16.39**
C0529-072-0875-M	**0.529**	**13.44**	**0.072**	**1.83**	**0.875**	**22.23**	**0.543**	**13.79**	**0.509**	**12.92**	**28.43**	**126.47**	**85.63**	**14.98**
C0529-072-0938-M	**0.529**	**13.44**	**0.072**	**1.83**	**0.938**	**23.81**	**0.577**	**14.66**	**0.539**	**13.69**	**28.43**	**126.47**	**78.88**	**13.80**
C0529-072-1000-M	**0.529**	**13.44**	**0.072**	**1.83**	**1.000**	**25.40**	**0.611**	**15.52**	**0.570**	**14.47**	**28.43**	**126.47**	**73.12**	**12.80**
C0529-072-1125-M	**0.529**	**13.44**	**0.072**	**1.83**	**1.125**	**28.58**	**0.679**	**17.26**	**0.631**	**16.02**	**28.43**	**126.47**	**63.80**	**11.17**
C0529-072-1250-M	**0.529**	**13.44**	**0.072**	**1.83**	**1.250**	**31.75**	**0.748**	**18.99**	**0.692**	**17.57**	**28.43**	**126.47**	**56.59**	**9.90**
C0529-072-1375-M	**0.529**	**13.44**	**0.072**	**1.83**	**1.375**	**34.93**	**0.816**	**20.72**	**0.753**	**19.13**	**28.43**	**126.47**	**50.85**	**8.90**
C0529-072-1500-M	**0.529**	**13.44**	**0.072**	**1.83**	**1.500**	**38.10**	**0.884**	**22.45**	**0.814**	**20.68**	**28.43**	**126.47**	**46.16**	**8.08**
C0529-072-1625-M	**0.529**	**13.44**	**0.072**	**1.83**	**1.625**	**41.28**	**0.952**	**24.19**	**0.875**	**22.23**	**28.43**	**126.47**	**42.26**	**7.40**
C0529-072-1750-M	**0.529**	**13.44**	**0.072**	**1.83**	**1.750**	**44.45**	**1.020**	**25.92**	**0.936**	**23.78**	**28.43**	**126.47**	**38.97**	**6.82**
C0529-072-1875-M	**0.529**	**13.44**	**0.072**	**1.83**	**1.875**	**47.63**	**1.089**	**27.65**	**0.997**	**25.33**	**28.43**	**126.47**	**36.16**	**6.33**
C0529-072-2000-M	**0.529**	**13.44**	**0.072**	**1.83**	**2.000**	**50.80**	**1.157**	**29.39**	**1.059**	**26.89**	**28.43**	**126.47**	**33.72**	**5.90**
C0529-072-2125-M	**0.529**	**13.44**	**0.072**	**1.83**	**2.125**	**53.98**	**1.225**	**31.12**	**1.120**	**28.44**	**28.43**	**126.47**	**31.60**	**5.53**
C0529-072-2250-M	**0.529**	**13.44**	**0.072**	**1.83**	**2.250**	**57.15**	**1.293**	**32.85**	**1.181**	**29.99**	**28.43**	**126.47**	**29.72**	**5.20**
C0529-072-2375-M	**0.529**	**13.44**	**0.072**	**1.83**	**2.375**	**60.33**	**1.362**	**34.58**	**1.242**	**31.54**	**28.43**	**126.47**	**28.06**	**4.91**
C0529-072-2500-M	**0.529**	**13.44**	**0.072**	**1.83**	**2.500**	**63.50**	**1.430**	**36.32**	**1.303**	**33.10**	**28.43**	**126.47**	**26.57**	**4.65**
C0529-072-2625-M	**0.529**	**13.44**	**0.072**	**1.83**	**2.625**	**66.68**	**1.498**	**38.05**	**1.364**	**34.65**	**28.43**	**126.47**	**25.23**	**4.42**
C0529-072-2750-M	**0.529**	**13.44**	**0.072**	**1.83**	**2.750**	**69.85**	**1.566**	**39.78**	**1.425**	**36.20**	**28.43**	**126.47**	**24.02**	**4.20**
C0529-072-2875-M	**0.529**	**13.44**	**0.072**	**1.83**	**2.875**	**73.03**	**1.634**	**41.51**	**1.486**	**37.75**	**28.43**	**126.47**	**22.92**	**4.01**
C0529-072-3000-M	**0.529**	**13.44**	**0.072**	**1.83**	**3.000**	**76.20**	**1.703**	**43.25**	**1.547**	**39.30**	**28.43**	**126.47**	**21.92**	**3.84**
C0529-072-3250-M	**0.529**	**13.44**	**0.072**	**1.83**	**3.250**	**82.55**	**1.839**	**46.71**	**1.670**	**42.41**	**28.43**	**126.47**	**20.15**	**3.53**
C0529-072-3500-M	**0.529**	**13.44**	**0.072**	**1.83**	**3.500**	**88.90**	**1.976**	**50.18**	**1.792**	**45.51**	**28.43**	**126.47**	**18.65**	**3.26**
C0529-072-3750-M	**0.529**	**13.44**	**0.072**	**1.83**	**3.750**	**95.25**	**2.112**	**53.64**	**1.914**	**48.62**	**28.43**	**126.47**	**17.36**	**3.04**
C0529-072-4000-M	**0.529**	**13.44**	**0.072**	**1.83**	**4.000**	**101.60**	**2.248**	**57.11**	**2.036**	**51.72**	**28.43**	**126.47**	**16.23**	**2.84**
C0529-072-4250-M	**0.529**	**13.44**	**0.072**	**1.83**	**4.250**	**107.95**	**2.385**	**60.58**	**2.158**	**54.83**	**28.43**	**126.47**	**15.24**	**2.67**
C0529-072-4500-M	**0.529**	**13.44**	**0.072**	**1.83**	**4.500**	**114.30**	**2.521**	**64.04**	**2.281**	**57.93**	**28.43**	**126.47**	**14.37**	**2.51**
C0529-072-4750-M	**0.529**	**13.44**	**0.072**	**1.83**	**4.750**	**120.65**	**2.658**	**67.51**	**2.403**	**61.03**	**28.43**	**126.47**	**13.59**	**2.38**
C0529-072-5000-M	**0.529**	**13.44**	**0.072**	**1.83**	**5.000**	**127.00**	**2.794**	**70.97**	**2.525**	**64.14**	**28.43**	**126.47**	**12.89**	**2.26**
C0529-072-5250-M	**0.529**	**13.44**	**0.072**	**1.83**	**5.250**	**133.35**	**2.931**	**74.44**	**2.647**	**67.24**	**28.43**	**126.47**	**12.26**	**2.15**
C0529-072-5500-M	**0.529**	**13.44**	**0.072**	**1.83**	**5.500**	**139.70**	**3.067**	**77.90**	**2.770**	**70.35**	**28.43**	**126.47**	**11.69**	**2.05**
C0529-072-5750-M	**0.529**	**13.44**	**0.072**	**1.83**	**5.750**	**146.05**	**3.203**	**81.37**	**2.892**	**73.45**	**28.43**	**126.47**	**11.17**	**1.95**
C0529-072-6000-M	**0.529**	**13.44**	**0.072**	**1.83**	**6.000**	**152.40**	**3.340**	**84.83**	**3.014**	**76.56**	**28.43**	**126.47**	**10.69**	**1.87**
C0529-072-6250-M	**0.529**	**13.44**	**0.072**	**1.83**	**6.250**	**158.75**	**3.476**	**88.30**	**3.136**	**79.66**	**28.43**	**126.47**	**10.25**	**1.79**
C0529-072-6500-M	**0.529**	**13.44**	**0.072**	**1.83**	**6.500**	**165.10**	**3.613**	**91.76**	**3.258**	**82.76**	**28.43**	**126.47**	**9.85**	**1.72**
C0529-072-6750-M	**0.529**	**13.44**	**0.072**	**1.83**	**6.750**	**171.45**	**3.749**	**95.23**	**3.381**	**85.87**	**28.43**	**126.47**	**9.48**	**1.66**

STAINLESS STEEL

Catalog #	Load Length (L_1)		Load (P) at L_1		Spring Rate (R)	
	in	mm	lb	N	lb/in	N/mm
C0529-068-2000-S	**1.174**	**29.81**	**19.25**	**85.61**	**23.29**	**4.08**
C0529-068-2125-S	**1.243**	**31.58**	**19.25**	**85.61**	**21.83**	**3.82**
C0529-068-2250-S	**1.313**	**33.35**	**19.25**	**85.61**	**20.54**	**3.59**
C0529-068-2375-S	**1.382**	**35.12**	**19.25**	**85.61**	**19.39**	**3.39**
C0529-068-2500-S	**1.452**	**36.88**	**19.25**	**85.61**	**18.37**	**3.21**
C0529-068-2625-S	**1.522**	**38.65**	**19.25**	**85.61**	**17.44**	**3.05**
C0529-068-2750-S	**1.591**	**40.42**	**19.25**	**85.61**	**16.61**	**2.91**
C0529-068-2875-S	**1.661**	**42.19**	**19.25**	**85.61**	**15.85**	**2.77**
C0529-068-3000-S	**1.730**	**43.95**	**19.25**	**85.61**	**15.16**	**2.65**
C0529-068-3250-S	**1.870**	**47.49**	**19.25**	**85.61**	**13.94**	**2.44**
C0529-068-3500-S	**2.009**	**51.02**	**19.25**	**85.61**	**12.91**	**2.26**
C0529-068-3750-S	**2.148**	**54.56**	**19.25**	**85.61**	**12.01**	**2.10**
C0529-068-4000-S	**2.287**	**58.09**	**19.25**	**85.61**	**11.24**	**1.97**
C0529-068-4250-S	**2.426**	**61.63**	**19.25**	**85.61**	**10.55**	**1.85**
C0529-068-4500-S	**2.566**	**65.16**	**19.25**	**85.61**	**9.95**	**1.74**
C0529-068-4750-S	**2.705**	**68.70**	**19.25**	**85.61**	**9.41**	**1.65**
C0529-068-5000-S	**2.844**	**72.23**	**19.25**	**85.61**	**8.93**	**1.56**
C0529-068-5250-S	**2.983**	**75.77**	**19.25**	**85.61**	**8.49**	**1.49**
C0529-068-5500-S	**3.122**	**79.30**	**19.25**	**85.61**	**8.09**	**1.42**
C0529-068-5750-S	**3.261**	**82.84**	**19.25**	**85.61**	**7.73**	**1.35**
C0529-068-6000-S	**3.401**	**86.38**	**19.25**	**85.61**	**7.40**	**1.30**
C0529-068-6250-S	**3.540**	**89.91**	**19.25**	**85.61**	**7.10**	**1.24**
C0529-068-6500-S	**3.679**	**93.45**	**19.25**	**85.61**	**6.82**	**1.19**
C0529-068-6750-S	**3.818**	**96.98**	**19.25**	**85.61**	**6.56**	**1.15**
C0529-068-7000-S	**3.957**	**100.52**	**19.25**	**85.61**	**6.33**	**1.11**
C0529-068-7500-S	**4.236**	**107.59**	**19.25**	**85.61**	**5.90**	**1.03**
C0529-068-8000-S	**4.514**	**114.66**	**19.25**	**85.61**	**5.52**	**0.97**
C0529-068-8500-S	**4.792**	**121.73**	**19.25**	**85.61**	**5.19**	**0.91**
C0529-068-9000-S	**5.071**	**128.80**	**19.25**	**85.61**	**4.90**	**0.86**
C0529-072-0813-S	**0.536**	**13.63**	**22.47**	**99.96**	**81.42**	**14.25**
C0529-072-0875-S	**0.573**	**14.56**	**22.47**	**99.96**	**74.46**	**13.03**
C0529-072-0938-S	**0.610**	**15.49**	**22.47**	**99.96**	**68.59**	**12.00**
C0529-072-1000-S	**0.647**	**16.42**	**22.47**	**99.96**	**63.58**	**11.13**
C0529-072-1125-S	**0.720**	**18.29**	**22.47**	**99.96**	**55.48**	**9.71**
C0529-072-1250-S	**0.793**	**20.15**	**22.47**	**99.96**	**49.21**	**8.61**
C0529-072-1375-S	**0.867**	**22.02**	**22.47**	**99.96**	**44.21**	**7.74**
C0529-072-1500-S	**0.940**	**23.88**	**22.47**	**99.96**	**40.14**	**7.02**
C0529-072-1625-S	**1.014**	**25.74**	**22.47**	**99.96**	**36.75**	**6.43**
C0529-072-1750-S	**1.087**	**27.61**	**22.47**	**99.96**	**33.89**	**5.93**
C0529-072-1875-S	**1.160**	**29.47**	**22.47**	**99.96**	**31.44**	**5.50**
C0529-072-2000-S	**1.234**	**31.34**	**22.47**	**99.96**	**29.33**	**5.13**
C0529-072-2125-S	**1.307**	**33.20**	**22.47**	**99.96**	**27.48**	**4.81**
C0529-072-2250-S	**1.380**	**35.06**	**22.47**	**99.96**	**25.84**	**4.52**
C0529-072-2375-S	**1.454**	**36.93**	**22.47**	**99.96**	**24.40**	**4.27**
C0529-072-2500-S	**1.527**	**38.79**	**22.47**	**99.96**	**23.10**	**4.04**
C0529-072-2625-S	**1.601**	**40.66**	**22.47**	**99.96**	**21.94**	**3.84**
C0529-072-2750-S	**1.674**	**42.52**	**22.47**	**99.96**	**20.89**	**3.66**
C0529-072-2875-S	**1.747**	**44.38**	**22.47**	**99.96**	**19.93**	**3.49**
C0529-072-3000-S	**1.821**	**46.25**	**22.47**	**99.96**	**19.06**	**3.33**
C0529-072-3250-S	**1.968**	**49.98**	**22.47**	**99.96**	**17.52**	**3.07**
C0529-072-3500-S	**2.114**	**53.71**	**22.47**	**99.96**	**16.22**	**2.84**
C0529-072-3750-S	**2.261**	**57.43**	**22.47**	**99.96**	**15.09**	**2.64**
C0529-072-4000-S	**2.408**	**61.16**	**22.47**	**99.96**	**14.12**	**2.47**
C0529-072-4250-S	**2.555**	**64.89**	**22.47**	**99.96**	**13.26**	**2.32**
C0529-072-4500-S	**2.702**	**68.62**	**22.47**	**99.96**	**12.50**	**2.19**
C0529-072-4750-S	**2.848**	**72.35**	**22.47**	**99.96**	**11.82**	**2.07**
C0529-072-5000-S	**2.995**	**76.07**	**22.47**	**99.96**	**11.21**	**1.96**
C0529-072-5250-S	**3.142**	**79.80**	**22.47**	**99.96**	**10.66**	**1.87**
C0529-072-5500-S	**3.289**	**83.53**	**22.47**	**99.96**	**10.16**	**1.78**
C0529-072-5750-S	**3.435**	**87.26**	**22.47**	**99.96**	**9.71**	**1.70**
C0529-072-6000-S	**3.582**	**90.99**	**22.47**	**99.96**	**9.29**	**1.63**
C0529-072-6250-S	**3.729**	**94.72**	**22.47**	**99.96**	**8.91**	**1.56**
C0529-072-6500-S	**3.876**	**98.44**	**22.47**	**99.96**	**8.56**	**1.50**
C0529-072-6750-S	**4.023**	**102.17**	**22.47**	**99.96**	**8.24**	**1.44**

FOR INFORMATION ON ALTERNATIVE FINISHES, SEE PAGE 311

Part Numbers with an "*" are squared and not ground. **Part Numbers in bold** represent the newly expanded Associated Spring RAYMOND compression spring offering.

MUSIC WIRE															STAINLESS STEEL						
Catalog #	Outside Diameter (OD)		Wire Diameter (d)		Free Length (L) Approx		Load Length (L_1)		Solid Height (Sh) Approx		Load (P) at L_1		Spring Rate (R)		Catalog #	Load Length (L_1)		Load (P) at L_1		Spring Rate (R)	
	in	mm	in	mm	in	mm	in	mm	in	mm	lb	N	lb/in	N/mm		in	mm	lb	N	lb/in	N/mm
C0529-072-7000-M	**0.529**	**13.44**	**0.072**	**1.83**	**7.000**	**177.80**	**3.886**	**98.70**	**3.503**	**88.97**	**28.43**	**126.47**	**9.13**	**1.60**	**C0529-072-7000-S**	**4.169**	**105.90**	**22.47**	**99.96**	**7.94**	**1.39**
C0529-072-7500-M	**0.529**	**13.44**	**0.072**	**1.83**	**7.500**	**190.50**	**4.159**	**105.63**	**3.747**	**95.18**	**28.43**	**126.47**	**8.51**	**1.49**	**C0529-072-7500-S**	**4.463**	**113.36**	**22.47**	**99.96**	**7.40**	**1.29**
C0529-072-8000-M	**0.529**	**13.44**	**0.072**	**1.83**	**8.000**	**203.20**	**4.431**	**112.56**	**3.992**	**101.39**	**28.43**	**126.47**	**7.97**	**1.39**	**C0529-072-8000-S**	**4.756**	**120.81**	**22.47**	**99.96**	**6.93**	**1.21**
C0529-072-8500-M	**0.529**	**13.44**	**0.072**	**1.83**	**8.500**	**215.90**	**4.704**	**119.49**	**4.236**	**107.60**	**28.43**	**126.47**	**7.49**	**1.31**	**C0529-072-8500-S**	**5.050**	**128.27**	**22.47**	**99.96**	**6.51**	**1.14**
C0529-072-9000-M	**0.529**	**13.44**	**0.072**	**1.83**	**9.000**	**228.60**	**4.977**	**126.42**	**4.481**	**113.81**	**28.43**	**126.47**	**7.07**	**1.24**	**C0529-072-9000-S**	**5.344**	**135.73**	**22.47**	**99.96**	**6.15**	**1.08**
C0529-085-0813-M	**0.529**	**13.44**	**0.085**	**2.16**	**0.813**	**20.64**	**0.584**	**14.82**	**0.570**	**14.49**	**44.69**	**198.79**	**195.25**	**34.17**	**C0529-085-0813-S**	**0.606**	**15.39**	**35.07**	**156.02**	**169.78**	**29.71**
C0529-085-0875-M	**0.529**	**13.44**	**0.085**	**2.16**	**0.875**	**22.23**	**0.624**	**15.85**	**0.609**	**15.46**	**44.69**	**198.79**	**177.94**	**31.14**	**C0529-085-0875-S**	**0.648**	**16.47**	**35.07**	**156.02**	**154.73**	**27.08**
C0529-085-0938-M	**0.529**	**13.44**	**0.085**	**2.16**	**0.938**	**23.81**	**0.664**	**16.87**	**0.647**	**16.42**	**44.69**	**198.79**	**163.45**	**28.60**	**C0529-085-0938-S**	**0.691**	**17.54**	**35.07**	**156.02**	**142.13**	**24.87**
C0529-085-1000-M	**0.529**	**13.44**	**0.085**	**2.16**	**1.000**	**25.40**	**0.704**	**17.89**	**0.685**	**17.39**	**44.69**	**198.79**	**151.14**	**26.45**	**C0529-085-1000-S**	**0.733**	**18.62**	**35.07**	**156.02**	**131.43**	**23.00**
C0529-085-1125-M	**0.529**	**13.44**	**0.085**	**2.16**	**1.125**	**28.58**	**0.785**	**19.93**	**0.761**	**19.33**	**44.69**	**198.79**	**131.36**	**22.99**	**C0529-085-1125-S**	**0.818**	**20.78**	**35.07**	**156.02**	**114.23**	**19.99**
C0529-085-1250-M	**0.529**	**13.44**	**0.085**	**2.16**	**1.250**	**31.75**	**0.865**	**21.98**	**0.837**	**21.27**	**44.69**	**198.79**	**116.16**	**20.33**	**C0529-085-1250-S**	**0.903**	**22.93**	**35.07**	**156.02**	**101.00**	**17.68**
C0529-085-1375-M	**0.529**	**13.44**	**0.085**	**2.16**	**1.375**	**34.93**	**0.946**	**24.02**	**0.913**	**23.20**	**44.69**	**198.79**	**104.11**	**18.22**	**C0529-085-1375-S**	**0.988**	**25.08**	**35.07**	**156.02**	**90.53**	**15.84**
C0529-085-1500-M	**0.529**	**13.44**	**0.085**	**2.16**	**1.500**	**38.10**	**1.026**	**26.07**	**0.990**	**25.14**	**44.69**	**198.79**	**94.32**	**16.51**	**C0529-085-1500-S**	**1.072**	**27.24**	**35.07**	**156.02**	**82.02**	**14.35**
C0529-085-1625-M	**0.529**	**13.44**	**0.085**	**2.16**	**1.625**	**41.28**	**1.107**	**28.11**	**1.066**	**27.08**	**44.69**	**198.79**	**86.22**	**15.09**	**C0529-085-1625-S**	**1.157**	**29.39**	**35.07**	**156.02**	**74.97**	**13.12**
C0529-085-1750-M	**0.529**	**13.44**	**0.085**	**2.16**	**1.750**	**44.45**	**1.187**	**30.15**	**1.142**	**29.01**	**44.69**	**198.79**	**79.40**	**13.89**	**C0529-085-1750-S**	**1.242**	**31.55**	**35.07**	**156.02**	**69.04**	**12.08**
C0529-085-1875-M	**0.529**	**13.44**	**0.085**	**2.16**	**1.875**	**47.63**	**1.268**	**32.20**	**1.218**	**30.95**	**44.69**	**198.79**	**73.58**	**12.88**	**C0529-085-1875-S**	**1.327**	**33.70**	**35.07**	**156.02**	**63.98**	**11.20**
C0529-085-2000-M	**0.529**	**13.44**	**0.085**	**2.16**	**2.000**	**50.80**	**1.348**	**34.24**	**1.295**	**32.88**	**44.69**	**198.79**	**68.55**	**12.00**	**C0529-085-2000-S**	**1.412**	**35.85**	**35.07**	**156.02**	**59.61**	**10.43**
C0529-085-2125-M	**0.529**	**13.44**	**0.085**	**2.16**	**2.125**	**53.98**	**1.429**	**36.28**	**1.371**	**34.82**	**44.69**	**198.79**	**64.17**	**11.23**	**C0529-085-2125-S**	**1.496**	**38.01**	**35.07**	**156.02**	**55.80**	**9.76**
C0529-085-2250-M	**0.529**	**13.44**	**0.085**	**2.16**	**2.250**	**57.15**	**1.509**	**38.33**	**1.447**	**36.76**	**44.69**	**198.79**	**60.31**	**10.55**	**C0529-085-2250-S**	**1.581**	**40.16**	**35.07**	**156.02**	**52.44**	**9.18**
C0529-085-2375-M	**0.529**	**13.44**	**0.085**	**2.16**	**2.375**	**60.33**	**1.589**	**40.37**	**1.523**	**38.69**	**44.69**	**198.79**	**56.89**	**9.96**	**C0529-085-2375-S**	**1.666**	**42.32**	**35.07**	**156.02**	**49.47**	**8.66**
C0529-085-2500-M	**0.529**	**13.44**	**0.085**	**2.16**	**2.500**	**63.50**	**1.670**	**42.42**	**1.600**	**40.63**	**44.69**	**198.79**	**53.84**	**9.42**	**C0529-085-2500-S**	**1.751**	**44.47**	**35.07**	**156.02**	**46.82**	**8.19**
C0529-085-2625-M	**0.529**	**13.44**	**0.085**	**2.16**	**2.625**	**66.68**	**1.750**	**44.46**	**1.676**	**42.57**	**44.69**	**198.79**	**51.10**	**8.94**	**C0529-085-2625-S**	**1.836**	**46.63**	**35.07**	**156.02**	**44.43**	**7.78**
C0529-085-2750-M	**0.529**	**13.44**	**0.085**	**2.16**	**2.750**	**69.85**	**1.831**	**46.50**	**1.752**	**44.50**	**44.69**	**198.79**	**48.62**	**8.51**	**C0529-085-2750-S**	**1.920**	**48.78**	**35.07**	**156.02**	**42.28**	**7.40**
C0529-085-2875-M	**0.529**	**13.44**	**0.085**	**2.16**	**2.875**	**73.03**	**1.911**	**48.55**	**1.828**	**46.44**	**44.69**	**198.79**	**46.38**	**8.12**	**C0529-085-2875-S**	**2.005**	**50.93**	**35.07**	**156.02**	**40.33**	**7.06**
C0529-085-3000-M	**0.529**	**13.44**	**0.085**	**2.16**	**3.000**	**76.20**	**1.992**	**50.59**	**1.905**	**48.38**	**44.69**	**198.79**	**44.33**	**7.76**	**C0529-085-3000-S**	**2.090**	**53.09**	**35.07**	**156.02**	**38.55**	**6.75**
C0529-085-3250-M	**0.529**	**13.44**	**0.085**	**2.16**	**3.250**	**82.55**	**2.153**	**54.68**	**2.057**	**52.25**	**44.69**	**198.79**	**40.73**	**7.13**	**C0529-085-3250-S**	**2.260**	**57.40**	**35.07**	**156.02**	**35.42**	**6.20**
C0529-085-3500-M	**0.529**	**13.44**	**0.085**	**2.16**	**3.500**	**88.90**	**2.314**	**58.77**	**2.210**	**56.12**	**44.69**	**198.79**	**37.67**	**6.59**	**C0529-085-3500-S**	**2.429**	**61.70**	**35.07**	**156.02**	**32.76**	**5.73**
C0529-085-3750-M	**0.529**	**13.44**	**0.085**	**2.16**	**3.750**	**95.25**	**2.475**	**62.86**	**2.362**	**60.00**	**44.69**	**198.79**	**35.04**	**6.13**	**C0529-085-3750-S**	**2.599**	**66.01**	**35.07**	**156.02**	**30.47**	**5.33**
C0529-085-4000-M	**0.529**	**13.44**	**0.085**	**2.16**	**4.000**	**101.60**	**2.636**	**66.94**	**2.515**	**63.87**	**44.69**	**198.79**	**32.75**	**5.73**	**C0529-085-4000-S**	**2.769**	**70.32**	**35.07**	**156.02**	**28.48**	**4.98**
C0529-085-4250-M	**0.529**	**13.44**	**0.085**	**2.16**	**4.250**	**107.95**	**2.797**	**71.03**	**2.667**	**67.74**	**44.69**	**198.79**	**30.75**	**5.38**	**C0529-085-4250-S**	**2.938**	**74.63**	**35.07**	**156.02**	**26.74**	**4.68**
C0529-085-4500-M	**0.529**	**13.44**	**0.085**	**2.16**	**4.500**	**114.30**	**2.957**	**75.12**	**2.820**	**71.62**	**44.69**	**198.79**	**28.97**	**5.07**	**C0529-085-4500-S**	**3.108**	**78.94**	**35.07**	**156.02**	**25.19**	**4.41**
C0529-085-4750-M	**0.529**	**13.44**	**0.085**	**2.16**	**4.750**	**120.65**	**3.118**	**79.21**	**2.972**	**75.49**	**44.69**	**198.79**	**27.39**	**4.79**	**C0529-085-4750-S**	**3.277**	**83.25**	**35.07**	**156.02**	**23.82**	**4.17**
C0529-085-5000-M	**0.529**	**13.44**	**0.085**	**2.16**	**5.000**	**127.00**	**3.279**	**83.30**	**3.124**	**79.36**	**44.69**	**198.79**	**25.97**	**4.55**	**C0529-085-5000-S**	**3.447**	**87.55**	**35.07**	**156.02**	**22.59**	**3.95**
C0529-085-5250-M	**0.529**	**13.44**	**0.085**	**2.16**	**5.250**	**133.35**	**3.440**	**87.38**	**3.277**	**83.23**	**44.69**	**198.79**	**24.69**	**4.32**	**C0529-085-5250-S**	**3.617**	**91.86**	**35.07**	**156.02**	**21.47**	**3.76**
C0529-085-5500-M	**0.529**	**13.44**	**0.085**	**2.16**	**5.500**	**139.70**	**3.601**	**91.47**	**3.429**	**87.11**	**44.69**	**198.79**	**23.54**	**4.12**	**C0529-085-5500-S**	**3.786**	**96.17**	**35.07**	**156.02**	**20.47**	**3.58**
C0529-085-5750-M	**0.529**	**13.44**	**0.085**	**2.16**	**5.750**	**146.05**	**3.762**	**95.56**	**3.582**	**90.98**	**44.69**	**198.79**	**22.48**	**3.93**	**C0529-085-5750-S**	**3.956**	**100.48**	**35.07**	**156.02**	**19.55**	**3.42**
C0529-085-6000-M	**0.529**	**13.44**	**0.085**	**2.16**	**6.000**	**152.40**	**3.923**	**99.65**	**3.734**	**94.85**	**44.69**	**198.79**	**21.52**	**3.77**	**C0529-085-6000-S**	**4.125**	**104.79**	**35.07**	**156.02**	**18.71**	**3.27**
C0529-085-6250-M	**0.529**	**13.44**	**0.085**	**2.16**	**6.250**	**158.75**	**4.084**	**103.73**	**3.887**	**98.73**	**44.69**	**198.79**	**20.63**	**3.61**	**C0529-085-6250-S**	**4.295**	**109.09**	**35.07**	**156.02**	**17.94**	**3.14**
C0529-085-6500-M	**0.529**	**13.44**	**0.085**	**2.16**	**6.500**	**165.10**	**4.245**	**107.82**	**4.039**	**102.60**	**44.69**	**198.79**	**19.82**	**3.47**	**C0529-085-6500-S**	**4.465**	**113.40**	**35.07**	**156.02**	**17.23**	**3.02**
C0529-085-6750-M	**0.529**	**13.44**	**0.085**	**2.16**	**6.750**	**171.45**	**4.406**	**111.91**	**4.192**	**106.47**	**44.69**	**198.79**	**19.07**	**3.34**	**C0529-085-6750-S**	**4.634**	**117.71**	**35.07**	**156.02**	**16.58**	**2.90**
C0529-085-7000-M	**0.529**	**13.44**	**0.085**	**2.16**	**7.000**	**177.80**	**4.567**	**116.00**	**4.344**	**110.35**	**44.69**	**198.79**	**18.37**	**3.21**	**C0529-085-7000-S**	**4.804**	**122.02**	**35.07**	**156.02**	**15.97**	**2.79**
C0529-085-7500-M	**0.529**	**13.44**	**0.085**	**2.16**	**7.500**	**190.50**	**4.889**	**124.17**	**4.649**	**118.09**	**44.69**	**198.79**	**17.11**	**2.99**	**C0529-085-7500-S**	**5.143**	**130.64**	**35.07**	**156.02**	**14.88**	**2.60**
C0529-085-8000-M	**0.529**	**13.44**	**0.085**	**2.16**	**8.000**	**203.20**	**5.211**	**132.35**	**4.954**	**125.84**	**44.69**	**198.79**	**16.02**	**2.80**	**C0529-085-8000-S**	**5.482**	**139.25**	**35.07**	**156.02**	**13.93**	**2.44**
C0529-085-8500-M	**0.529**	**13.44**	**0.085**	**2.16**	**8.500**	**215.90**	**5.532**	**140.53**	**5.259**	**133.58**	**44.69**	**198.79**	**15.06**	**2.64**	**C0529-085-8500-S**	**5.822**	**147.87**	**35.07**	**156.02**	**13.10**	**2.29**
C0529-092-0813-M	**0.529**	**13.44**	**0.092**	**2.34**	**0.813**	**20.64**	**0.618**	**15.69**	**0.613**	**15.56**	**55.33**	**246.11**	**284.20**	**49.74**	**C0529-092-0813-S**	**0.638**	**16.19**	**43.24**	**192.33**	**247.13**	**43.25**
C0529-092-0875-M	**0.529**	**13.44**	**0.092**	**2.34**	**0.875**	**22.23**	**0.661**	**16.79**	**0.654**	**16.62**	**55.33**	**246.11**	**258.50**	**45.24**	**C0529-092-0875-S**	**0.683**	**17.34**	**43.24**	**192.33**	**224.78**	**39.34**
C0529-092-0938-M	**0.529**	**13.44**	**0.092**	**2.34**	**0.938**	**23.81**	**0.704**	**17.88**	**0.696**	**17.68**	**55.33**	**246.11**	**237.05**	**41.48**	**C0529-092-0938-S**	**0.728**	**18.48**	**43.24**	**192.33**	**206.13**	**36.07**
C0529-092-1000-M	**0.529**	**13.44**	**0.092**	**2.34**	**1.000**	**25.40**	**0.747**	**18.98**	**0.738**	**18.74**	**55.33**	**246.11**	**218.90**	**38.31**	**C0529-092-1000-S**	**0.773**	**19.63**	**43.24**	**192.33**	**190.35**	**33.31**
C0529-092-1125-M	**0.529**	**13.44**	**0.092**	**2.34**	**1.125**	**28.58**	**0.834**	**21.17**	**0.821**	**20.86**	**55.33**	**246.11**	**189.82**	**33.22**	**C0529-092-1125-S**	**0.863**	**21.92**	**43.24**	**192.33**	**165.06**	**28.89**
C0529-092-1250-M	**0.529**	**13.44**	**0.092**	**2.34**	**1.250**	**31.75**	**0.920**	**23.36**	**0.905**	**22.98**	**55.33**	**246.11**	**167.56**	**29.32**	**C0529-092-1250-S**	**0.953**	**24.21**	**43.24**	**192.33**	**145.71**	**25.50**
C0529-092-1375-M	**0.529**	**13.44**	**0.092**	**2.34**	**1.375**	**34.93**	**1.006**	**25.55**	**0.988**	**25.10**	**55.33**	**246.11**	**149.98**	**26.25**	**C0529-092-1375-S**	**1.043**	**26.50**	**43.24**	**192.33**	**130.41**	**22.82**
C0529-092-1500-M	**0.529**	**13.44**	**0.092**	**2.34**	**1.500**	**38.10**	**1.092**	**27.75**	**1.071**	**27.21**	**55.33**	**246.11**	**135.73**	**23.75**	**C0529-092-1500-S**	**1.134**	**28.80**	**43.24**	**192.33**	**118.03**	**20.65**
C0529-092-1625-M	**0.529**	**13.44**	**0.092**	**2.34**	**1.625**	**41.28**	**1.179**	**29.94**	**1.155**	**29.33**	**55.33**	**246.11**	**123.96**	**21.69**	**C0529-092-1625-S**	**1.224**	**31.09**	**43.24**	**192.33**	**107.79**	**18.86**
C0529-092-1750-M	**0.529**	**13.44**	**0.092**	**2.34**	**1.750**	**44.45**	**1.265**	**32.13**	**1.238**	**31.45**	**55.33**	**246.11**	**114.06**	**19.96**	**C0529-092-1750-S**	**1.314**	**33.38**	**43.24**	**192.33**	**99.18**	**17.36**
C0529-092-1875-M	**0.529**	**13.44**	**0.092**	**2.34**	**1.875**	**47.63**	**1.351**	**34.32**	**1.322**	**33.57**	**55.33**	**246.11**	**105.63**	**18.49**	**C0529-092-1875-S**	**1.404**	**35.67**	**43.24**	**192.33**	**91.85**	**16.07**
C0529-092-2000-M	**0.529**	**13.44**	**0.092**	**2.34**	**2.000**	**50.80**	**1.437**	**36.51**	**1.405**	**35.69**	**55.33**	**246.11**	**98.36**	**17.21**	**C0529-092-2000-S**	**1.494**	**37.96**	**43.24**	**192.33**	**85.53**	**14.97**
C0529-092-2125-M	**0.529**	**13.44**	**0.092**	**2.34**	**2.125**	**53.98**	**1.524**	**38.70**	**1.489**	**37.81**	**55.33**	**246.11**	**92.03**	**16.10**	**C0529-092-2125-S**	**1.585**	**40.25**	**43.24**	**192.33**	**80.02**	**14.00**
C0529-092-2250-M	**0.529**	**13.44**	**0.092**	**2.34**	**2.250**	**57.15**	**1.610**	**40.90**	**1.572**	**39.93**	**55.33**	**246.11**	**86.46**	**15.13**	**C0529-092-2250-S**	**1.675**	**42.54**	**43.24**	**192.33**	**75.18**	**13.16**
C0529-092-2375-M	**0.529**	**13.44**	**0.092**	**2.34**	**2.375**	**60.33**	**1.696**	**43.09**	**1.655**	**42.05**	**55.33**	**246.11**	**81.52**	**14.27**	**C0529-092-2375-S**	**1.765**	**44.83**	**43.24**	**192.33**	**70.89**	**12.41**
C0529-092-2500-M	**0.529**	**13.44**	**0.092**	**2.34**	**2.500**	**63.50**	**1.783**	**45.28**	**1.739**	**44.17**	**55.33**	**246.11**	**77.12**	**13.50**	**C0529-092-2500-S**	**1.855**	**47.12**	**43.24**	**192.33**	**67.07**	**11.74**
C0529-092-2625-M	**0.529**	**13.44**	**0.092**	**2.34**	**2.625**	**66.68**	**1.869**	**47.47**	**1.822**	**46.28**	**55.33**	**246.11**	**73.18**	**12.81**	**C0529-092-2625-S**	**1.945**	**49.42**	**43.24**	**192.33**	**63.63**	**11.14**
C0529-092-2750-M	**0.529**	**13.44**	**0.092**	**2.34**	**2.750**	**69.85**	**1.955**	**49.66**	**1.906**	**48.40**	**55.33**	**246.11**	**69.61**	**12.18**	**C0529-092-2750-S**	**2.036**	**51.71**	**43.24**	**192.33**	**60.53**	**10.59**
C0529-092-2875-M	**0.529**	**13.44**	**0.092**	**2.34**	**2.875**	**73.03**	**2.041**	**51.85**	**1.989**	**50.52**	**55.33**	**246.11**	**66.38**	**11.62**	**C0529-092-2875-S**	**2.126**	**54.00**	**43.24**	**192.33**	**57.72**	**10.10**
C0529-092-3000-M	**0.529**	**13.44**	**0.092**	**2.34**	**3.000**	**76.20**	**2.128**	**54.04**	**2.072**	**52.64**	**55.33**	**246.11**	**63.43**	**11.10**	**C0529-092-3000-S**	**2.216**	**56.29**	**43.24**	**192.33**	**55.16**	**9.65**

Part Numbers with an "*" are squared and not ground. **Part Numbers in bold** represent the newly expanded Associated Spring RAYMOND compression spring offering.

MUSIC WIRE															STAINLESS STEEL					
Catalog #	Outside Diameter (OD)		Wire Diameter (d)		Free Length (L) Approx		Load Length (L_1)		Solid Height (Sh) Approx		Load (P) at L_1		Spring Rate (R)		Catalog #	Load Length (L_1)		Load (P) at L_1		Spring Rate (R)	
	in	mm	in	mm	in	mm	in	mm	in	mm	lb	N	lb/in	N/mm		in	mm	lb	N	lb/in	N/mm
C0529-092-3250-M	0.529	13.44	0.092	2.34	3.250	82.55	2.300	58.43	2.239	56.88	55.33	246.11	58.26	10.20	**C0529-092-3250-S**	2.397	60.87	43.24	192.33	50.66	8.87
C0529-092-3500-M	0.529	13.44	0.092	2.34	3.500	88.90	2.473	62.81	2.406	61.12	55.33	246.11	53.87	9.43	**C0529-092-3500-S**	2.577	65.45	43.24	192.33	46.84	8.20
C0529-092-3750-M	0.529	13.44	0.092	2.34	3.750	95.25	2.645	67.19	2.573	65.35	55.33	246.11	50.09	8.77	**C0529-092-3750-S**	2.757	70.04	43.24	192.33	43.56	7.62
C0529-092-4000-M	0.529	13.44	0.092	2.34	4.000	101.60	2.818	71.58	2.740	69.59	55.33	246.11	46.81	8.19	**C0529-092-4000-S**	2.938	74.62	43.24	192.33	40.70	7.12
C0529-092-4250-M	0.529	13.44	0.092	2.34	4.250	107.95	2.991	75.96	2.907	73.83	55.33	246.11	43.93	7.69	**C0529-092-4250-S**	3.118	79.20	43.24	192.33	38.20	6.69
C0529-092-4500-M	0.529	13.44	0.092	2.34	4.500	114.30	3.163	80.34	3.074	78.07	55.33	246.11	41.39	7.24	**C0529-092-4500-S**	3.299	83.78	43.24	192.33	35.99	6.30
C0529-092-4750-M	0.529	13.44	0.092	2.34	4.750	120.65	3.336	84.73	3.240	82.31	55.33	246.11	39.12	6.85	**C0529-092-4750-S**	3.479	88.37	43.24	192.33	34.02	5.95
C0529-092-5000-M	0.529	13.44	0.092	2.34	5.000	127.00	3.508	89.11	3.407	86.54	55.33	246.11	37.09	6.49	**C0529-092-5000-S**	3.659	92.95	43.24	192.33	32.25	5.64
C0529-092-5250-M	0.529	13.44	0.092	2.34	5.250	133.35	3.681	93.49	3.574	90.78	55.33	246.11	35.26	6.17	**C0529-092-5250-S**	3.840	97.53	43.24	192.33	30.66	5.37
C0529-092-5500-M	0.529	13.44	0.092	2.34	5.500	139.70	3.853	97.87	3.741	95.02	55.33	246.11	33.60	5.88	**C0529-092-5500-S**	4.020	102.11	43.24	192.33	29.22	5.11
C0529-092-5750-M	0.529	13.44	0.092	2.34	5.750	146.05	4.026	102.26	3.908	99.26	55.33	246.11	32.09	5.62	**C0529-092-5750-S**	4.201	106.69	43.24	192.33	27.91	4.88
C0529-092-6000-M	0.529	13.44	0.092	2.34	6.000	152.40	4.198	106.64	4.075	103.49	55.33	246.11	30.71	5.37	**C0529-092-6000-S**	4.381	111.28	43.24	192.33	26.71	4.67
C0529-092-6250-M	0.529	13.44	0.092	2.34	6.250	158.75	4.371	111.02	4.241	107.73	55.33	246.11	29.45	5.15	**C0529-092-6250-S**	4.561	115.86	43.24	192.33	25.61	4.48
C0529-092-6500-M	0.529	13.44	0.092	2.34	6.500	165.10	4.544	115.41	4.408	111.97	55.33	246.11	28.28	4.95	**C0529-092-6500-S**	4.742	120.44	43.24	192.33	24.59	4.30
C0529-092-6750-M	0.529	13.44	0.092	2.34	6.750	171.45	4.716	119.79	4.575	116.21	55.33	246.11	27.20	4.76	**C0529-092-6750-S**	4.922	125.02	43.24	192.33	23.66	4.14
C0529-092-7000-M	0.529	13.44	0.092	2.34	7.000	177.80	4.889	124.17	4.742	120.45	55.33	246.11	26.21	4.59	**C0529-092-7000-S**	5.103	129.61	43.24	192.33	22.79	3.99
C0529-092-7500-M	0.529	13.44	0.092	2.34	7.500	190.50	5.234	132.94	5.076	128.92	55.33	246.11	24.42	4.27	**C0529-092-7500-S**	5.463	138.77	43.24	192.33	21.23	3.72
C0529-092-8000-M	0.529	13.44	0.092	2.34	8.000	203.20	5.579	141.71	5.409	137.40	55.33	246.11	22.85	4.00	**C0529-092-8000-S**	5.824	147.94	43.24	192.33	19.87	3.48
C0529-092-8500-M	0.529	13.44	0.092	2.34	8.500	215.90	5.924	150.47	5.743	145.87	55.33	246.11	21.48	3.76	**C0529-092-8500-S**	6.185	157.10	43.24	192.33	18.68	3.27
C0529-098-0813-M	0.529	13.44	0.098	2.49	0.813	20.64	0.670	17.01	0.645	16.37	55.40	246.43	388.31	67.95	**C0529-098-0813-S**	0.661	16.80	51.01	226.91	337.66	59.09
C0529-098-0875-M	0.529	13.44	0.098	2.49	0.875	22.23	0.717	18.21	0.689	17.50	55.70	247.76	352.57	61.70	**C0529-098-0875-S**	0.709	18.00	51.01	226.91	306.58	53.65
C0529-098-0938-M	0.529	13.44	0.098	2.49	0.938	23.81	0.735	18.66	0.734	18.63	65.53	291.50	322.85	56.50	**C0529-098-0938-S**	0.756	19.20	51.01	226.91	280.74	49.13
C0529-098-1000-M	0.529	13.44	0.098	2.49	1.000	25.40	0.780	19.81	0.778	19.76	65.53	291.50	297.75	52.11	**C0529-098-1000-S**	0.803	20.40	51.01	226.91	258.92	45.31
C0529-098-1125-M	0.529	13.44	0.098	2.49	1.125	28.58	0.871	22.12	0.867	22.02	65.53	291.50	257.69	45.10	**C0529-098-1125-S**	0.897	22.79	51.01	226.91	224.08	39.21
C0529-098-1250-M	0.529	13.44	0.098	2.49	1.250	31.75	0.961	24.42	0.956	24.28	65.53	291.50	227.13	39.75	**C0529-098-1250-S**	0.992	25.19	51.01	226.91	197.50	34.56
C0529-098-1375-M	0.529	13.44	0.098	2.49	1.375	34.93	1.052	26.73	1.045	26.54	65.53	291.50	203.05	35.53	**C0529-098-1375-S**	1.086	27.59	51.01	226.91	176.56	30.90
C0529-098-1500-M	0.529	13.44	0.098	2.49	1.500	38.10	1.143	29.03	1.134	28.80	65.53	291.50	183.58	32.13	**C0529-098-1500-S**	1.180	29.98	51.01	226.91	159.64	27.94
C0529-098-1625-M	0.529	13.44	0.098	2.49	1.625	41.28	1.234	31.34	1.223	31.06	65.53	291.50	167.53	29.32	**C0529-098-1625-S**	1.275	32.38	51.01	226.91	145.67	25.49
C0529-098-1750-M	0.529	13.44	0.098	2.49	1.750	44.45	1.325	33.64	1.312	33.32	65.53	291.50	154.05	26.96	**C0529-098-1750-S**	1.369	34.78	51.01	226.91	133.96	23.44
C0529-098-1875-M	0.529	13.44	0.098	2.49	1.875	47.63	1.415	35.95	1.401	35.59	65.53	291.50	142.58	24.95	**C0529-098-1875-S**	1.464	37.17	51.01	226.91	123.98	21.70
C0529-098-2000-M	0.529	13.44	0.098	2.49	2.000	50.80	1.506	38.26	1.490	37.85	65.53	291.50	132.70	23.22	**C0529-098-2000-S**	1.558	39.57	51.01	226.91	115.39	20.19
C0529-098-2125-M	0.529	13.44	0.098	2.49	2.125	53.98	1.597	40.56	1.579	40.11	65.53	291.50	124.10	21.72	**C0529-098-2125-S**	1.652	41.97	51.01	226.91	107.92	18.89
C0529-098-2250-M	0.529	13.44	0.098	2.49	2.250	57.15	1.688	42.87	1.668	42.37	65.53	291.50	116.55	20.40	**C0529-098-2250-S**	1.747	44.37	51.01	226.91	101.35	17.74
C0529-098-2375-M	0.529	13.44	0.098	2.49	2.375	60.33	1.779	45.17	1.757	44.63	65.53	291.50	109.86	19.23	**C0529-098-2375-S**	1.841	46.76	51.01	226.91	95.53	16.72
C0529-098-2500-M	0.529	13.44	0.098	2.49	2.500	63.50	1.869	47.48	1.846	46.89	65.53	291.50	103.90	18.18	**C0529-098-2500-S**	1.935	49.16	51.01	226.91	90.35	15.81
C0529-098-2625-M	0.529	13.44	0.098	2.49	2.625	66.68	1.960	49.79	1.935	49.15	65.53	291.50	98.56	17.25	**C0529-098-2625-S**	2.030	51.56	51.01	226.91	85.70	15.00
C0529-098-2750-M	0.529	13.44	0.098	2.49	2.750	69.85	2.051	52.09	2.024	51.41	65.53	291.50	93.73	16.40	**C0529-098-2750-S**	2.124	53.95	51.01	226.91	81.51	14.26
C0529-098-2875-M	0.529	13.44	0.098	2.49	2.875	73.03	2.142	54.40	2.113	53.67	65.53	291.50	89.36	15.64	**C0529-098-2875-S**	2.219	56.35	51.01	226.91	77.70	13.60
C0529-098-3000-M	0.529	13.44	0.098	2.49	3.000	76.20	2.232	56.70	2.202	55.93	65.53	291.50	85.38	14.94	**C0529-098-3000-S**	2.313	58.75	51.01	226.91	74.24	12.99
C0529-098-3250-M	0.529	13.44	0.098	2.49	3.250	82.55	2.414	61.32	2.380	60.45	65.53	291.50	78.39	13.72	**C0529-098-3250-S**	2.502	63.54	51.01	226.91	68.16	11.93
C0529-098-3500-M	0.529	13.44	0.098	2.49	3.500	88.90	2.596	65.93	2.558	64.97	65.53	291.50	72.46	12.68	**C0529-098-3500-S**	2.690	68.34	51.01	226.91	63.01	11.03
C0529-098-3750-M	0.529	13.44	0.098	2.49	3.750	95.25	2.777	70.54	2.736	69.49	65.53	291.50	67.36	11.79	**C0529-098-3750-S**	2.879	73.13	51.01	226.91	58.57	10.25
C0529-098-4000-M	0.529	13.44	0.098	2.49	4.000	101.60	2.959	75.15	2.914	74.01	65.53	291.50	62.93	11.01	**C0529-098-4000-S**	3.068	77.92	51.01	226.91	54.72	9.58
C0529-098-4250-M	0.529	13.44	0.098	2.49	4.250	107.95	3.140	79.76	3.092	78.53	65.53	291.50	59.05	10.33	**C0529-098-4250-S**	3.257	82.72	51.01	226.91	51.35	8.99
C0529-098-4500-M	0.529	13.44	0.098	2.49	4.500	114.30	3.322	84.37	3.270	83.05	65.53	291.50	55.62	9.73	**C0529-098-4500-S**	3.445	87.51	51.01	226.91	48.37	8.46
C0529-098-4750-M	0.529	13.44	0.098	2.49	4.750	120.65	3.503	88.99	3.448	87.57	65.53	291.50	52.57	9.20	**C0529-098-4750-S**	3.634	92.30	51.01	226.91	45.71	8.00
C0529-098-5000-M	0.529	13.44	0.098	2.49	5.000	127.00	3.685	93.60	3.626	92.09	65.53	291.50	49.83	8.72	**C0529-098-5000-S**	3.823	97.10	51.01	226.91	43.33	7.58
C0529-098-5250-M	0.529	13.44	0.098	2.49	5.250	133.35	3.866	98.21	3.803	96.61	65.53	291.50	47.37	8.29	**C0529-098-5250-S**	4.012	101.89	51.01	226.91	41.19	7.21
C0529-098-5500-M	0.529	13.44	0.098	2.49	5.500	139.70	4.048	102.82	3.981	101.13	65.53	291.50	45.13	7.90	**C0529-098-5500-S**	4.200	106.69	51.01	226.91	39.25	6.87
C0529-098-5750-M	0.529	13.44	0.098	2.49	5.750	146.05	4.230	107.43	4.159	105.65	65.53	291.50	43.10	7.54	**C0529-098-5750-S**	4.389	111.48	51.01	226.91	37.48	6.56
C0529-098-6000-M	0.529	13.44	0.098	2.49	6.000	152.40	4.411	112.04	4.337	110.17	65.53	291.50	41.25	7.22	**C0529-098-6000-S**	4.578	116.27	51.01	226.91	35.87	6.28
C0529-098-6250-M	0.529	13.44	0.098	2.49	6.250	158.75	4.593	116.66	4.515	114.69	65.53	291.50	39.54	6.92	**C0529-098-6250-S**	4.766	121.07	51.01	226.91	34.39	6.02
C0529-098-6500-M	0.529	13.44	0.098	2.49	6.500	165.10	4.774	121.27	4.693	119.21	65.53	291.50	37.98	6.65	**C0529-098-6500-S**	4.955	125.86	51.01	226.91	33.02	5.78
C0529-098-6750-M	0.529	13.44	0.098	2.49	6.750	171.45	4.956	125.88	4.871	123.73	65.53	291.50	36.53	6.39	**C0529-098-6750-S**	5.144	130.66	51.01	226.91	31.76	5.56
C0529-098-7000-M	0.529	13.44	0.098	2.49	7.000	177.80	5.137	130.49	5.049	128.25	65.53	291.50	35.18	6.16	**C0529-098-7000-S**	5.333	135.45	51.01	226.91	30.60	5.35
C0529-098-7500-M	0.529	13.44	0.098	2.49	7.500	190.50	5.501	139.71	5.405	137.29	65.53	291.50	32.78	5.74	**C0529-098-7500-S**	5.710	145.04	51.01	226.91	28.50	4.99
C0529-098-8000-M	0.529	13.44	0.098	2.49	8.000	203.20	5.864	148.94	5.761	146.33	65.53	291.50	30.68	5.37	**C0529-098-8000-S**	6.088	154.63	51.01	226.91	26.67	4.67
C0529-098-8500-M	0.529	13.44	0.098	2.49	8.500	215.90	6.227	158.16	6.117	155.37	65.53	291.50	28.83	5.05	**C0529-098-8500-S**	6.465	164.21	51.01	226.91	25.07	4.39
C0529-105-0813-M	0.529	13.44	0.105	2.67	0.813	20.64	0.698	17.72	0.677	17.20	63.55	282.70	553.20	96.81	**C0529-105-0813-S**	0.686	17.42	60.99	271.28	481.04	84.18
C0529-105-0875-M	0.529	13.44	0.105	2.67	0.875	22.23	0.747	18.98	0.725	18.41	64.02	284.77	501.21	87.71	**C0529-105-0875-S**	0.735	18.67	60.99	271.28	435.83	76.27
C0529-105-0938-M	0.529	13.44	0.105	2.67	0.938	23.81	0.797	20.24	0.772	19.61	64.40	286.47	458.15	80.18	**C0529-105-0938-S**	0.784	19.92	60.99	271.28	398.39	69.72
C0529-105-1000-M	0.529	13.44	0.105	2.67	1.000	25.40	0.847	21.50	0.820	20.82	64.73	287.91	421.90	73.83	**C0529-105-1000-S**	0.834	21.18	60.99	271.28	366.87	64.20
C0529-105-1125-M	0.529	13.44	0.105	2.67	1.125	28.58	0.946	24.03	0.914	23.22	65.24	290.20	364.26	63.75	**C0529-105-1125-S**	0.932	23.68	60.99	271.28	316.75	55.43
C0529-105-1250-M	0.529	13.44	0.105	2.67	1.250	31.75	1.045	26.55	1.009	25.63	65.63	291.94	320.48	56.08	**C0529-105-1250-S**	1.031	26.19	60.99	271.28	278.68	48.77

FOR INFORMATION ON ALTERNATIVE FINISHES, SEE PAGE 311

Part Numbers with an "*" are squared and not ground. **Part Numbers in bold** represent the newly expanded Associated Spring RAYMOND compression spring offering.

MUSIC WIRE															STAINLESS STEEL						
Catalog #	Outside Diameter (OD)		Wire Diameter (d)		Free Length (L) Approx		Load Length (L_1)		Solid Height (Sh) Approx		Load (P) at L_1		Spring Rate (R)		Catalog #	Load Length (L_1)		Load (P) at L_1		Spring Rate (R)	
	in	mm	in	mm	in	mm	in	mm	in	mm	lb	N	lb/in	N/mm		in	mm	lb	N	lb/in	N/mm
C0529-105-1375-M	**0.529**	**13.44**	**0.105**	**2.67**	**1.375**	**34.93**	**1.145**	**29.07**	**1.104**	**28.04**	**65.94**	**293.30**	**286.10**	**50.07**	**C0529-105-1375-S**	**1.130**	**28.70**	**60.99**	**271.28**	**248.78**	**43.54**
C0529-105-1500-M	**0.529**	**13.44**	**0.105**	**2.67**	**1.500**	**38.10**	**1.244**	**31.59**	**1.199**	**30.45**	**66.19**	**294.41**	**258.37**	**45.22**	**C0529-105-1500-S**	**1.229**	**31.21**	**60.99**	**271.28**	**224.67**	**39.32**
C0529-105-1625-M	**0.529**	**13.44**	**0.105**	**2.67**	**1.625**	**41.28**	**1.343**	**34.12**	**1.293**	**32.85**	**66.39**	**295.31**	**235.55**	**41.22**	**C0529-105-1625-S**	**1.327**	**33.71**	**60.99**	**271.28**	**204.83**	**35.84**
C0529-105-1750-M	**0.529**	**13.44**	**0.105**	**2.67**	**1.750**	**44.45**	**1.442**	**36.64**	**1.388**	**35.26**	**66.56**	**296.07**	**216.43**	**37.88**	**C0529-105-1750-S**	**1.426**	**36.22**	**60.99**	**271.28**	**188.20**	**32.94**
C0529-105-1875-M	**0.529**	**13.44**	**0.105**	**2.67**	**1.875**	**47.63**	**1.542**	**39.16**	**1.483**	**37.67**	**66.70**	**296.72**	**200.18**	**35.03**	**C0529-105-1875-S**	**1.525**	**38.73**	**60.99**	**271.28**	**174.07**	**30.46**
C0529-105-2000-M	**0.529**	**13.44**	**0.105**	**2.67**	**2.000**	**50.80**	**1.641**	**41.68**	**1.578**	**40.08**	**66.83**	**297.27**	**186.20**	**32.59**	**C0529-105-2000-S**	**1.623**	**41.23**	**60.99**	**271.28**	**161.92**	**28.34**
C0529-105-2125-M	**0.529**	**13.44**	**0.105**	**2.67**	**2.125**	**53.98**	**1.673**	**42.49**	**1.673**	**42.48**	**78.72**	**350.17**	**174.05**	**30.46**	**C0529-105-2125-S**	**1.722**	**43.74**	**60.99**	**271.28**	**151.35**	**26.49**
C0529-105-2250-M	**0.529**	**13.44**	**0.105**	**2.67**	**2.250**	**57.15**	**1.768**	**44.91**	**1.767**	**44.89**	**78.72**	**350.17**	**163.38**	**28.59**	**C0529-105-2250-S**	**1.821**	**46.25**	**60.99**	**271.28**	**142.07**	**24.86**
C0529-105-2375-M	**0.529**	**13.44**	**0.105**	**2.67**	**2.375**	**60.33**	**1.864**	**47.34**	**1.862**	**47.30**	**78.72**	**350.17**	**153.95**	**26.94**	**C0529-105-2375-S**	**1.919**	**48.75**	**60.99**	**271.28**	**133.87**	**23.43**
C0529-105-2500-M	**0.529**	**13.44**	**0.105**	**2.67**	**2.500**	**63.50**	**1.959**	**49.76**	**1.957**	**49.70**	**78.72**	**350.17**	**145.55**	**25.47**	**C0529-105-2500-S**	**2.018**	**51.26**	**60.99**	**271.28**	**126.56**	**22.15**
C0529-105-2625-M	**0.529**	**13.44**	**0.105**	**2.67**	**2.625**	**66.68**	**2.055**	**52.19**	**2.052**	**52.11**	**78.72**	**350.17**	**138.01**	**24.15**	**C0529-105-2625-S**	**2.117**	**53.77**	**60.99**	**271.28**	**120.01**	**21.00**
C0529-105-2750-M	**0.529**	**13.44**	**0.105**	**2.67**	**2.750**	**69.85**	**2.150**	**54.61**	**2.146**	**54.52**	**78.72**	**350.17**	**131.22**	**22.96**	**C0529-105-2750-S**	**2.216**	**56.27**	**60.99**	**271.28**	**114.11**	**19.97**
C0529-105-2875-M	**0.529**	**13.44**	**0.105**	**2.67**	**2.875**	**73.03**	**2.246**	**57.04**	**2.241**	**56.93**	**78.72**	**350.17**	**125.07**	**21.89**	**C0529-105-2875-S**	**2.314**	**58.78**	**60.99**	**271.28**	**108.75**	**19.03**
C0529-105-3000-M	**0.529**	**13.44**	**0.105**	**2.67**	**3.000**	**76.20**	**2.341**	**59.46**	**2.336**	**59.33**	**78.72**	**350.17**	**119.46**	**20.91**	**C0529-105-3000-S**	**2.413**	**61.29**	**60.99**	**271.28**	**103.88**	**18.18**
C0529-105-3250-M	**0.529**	**13.44**	**0.105**	**2.67**	**3.250**	**82.55**	**2.532**	**64.31**	**2.526**	**64.15**	**78.72**	**350.17**	**109.64**	**19.19**	**C0529-105-3250-S**	**2.610**	**66.30**	**60.99**	**271.28**	**95.34**	**16.68**
C0529-105-3500-M	**0.529**	**13.44**	**0.105**	**2.67**	**3.500**	**88.90**	**2.723**	**69.16**	**2.715**	**68.96**	**78.72**	**350.17**	**101.31**	**17.73**	**C0529-105-3500-S**	**2.808**	**71.32**	**60.99**	**271.28**	**88.09**	**15.42**
C0529-105-3750-M	**0.529**	**13.44**	**0.105**	**2.67**	**3.750**	**95.25**	**2.914**	**74.01**	**2.905**	**73.78**	**78.72**	**350.17**	**94.15**	**16.48**	**C0529-105-3750-S**	**3.005**	**76.33**	**60.99**	**271.28**	**81.87**	**14.33**
C0529-105-4000-M	**0.529**	**13.44**	**0.105**	**2.67**	**4.000**	**101.60**	**3.105**	**78.86**	**3.094**	**78.59**	**78.72**	**350.17**	**87.94**	**15.39**	**C0529-105-4000-S**	**3.202**	**81.34**	**60.99**	**271.28**	**76.47**	**13.38**
C0529-105-4250-M	**0.529**	**13.44**	**0.105**	**2.67**	**4.250**	**107.95**	**3.296**	**83.71**	**3.284**	**83.41**	**78.72**	**350.17**	**82.50**	**14.44**	**C0529-105-4250-S**	**3.400**	**86.36**	**60.99**	**271.28**	**71.74**	**12.55**
C0529-105-4500-M	**0.529**	**13.44**	**0.105**	**2.67**	**4.500**	**114.30**	**3.487**	**88.56**	**3.473**	**88.22**	**78.72**	**350.17**	**77.69**	**13.60**	**C0529-105-4500-S**	**3.597**	**91.37**	**60.99**	**271.28**	**67.56**	**11.82**
C0529-105-4750-M	**0.529**	**13.44**	**0.105**	**2.67**	**4.750**	**120.65**	**3.678**	**93.41**	**3.663**	**93.04**	**78.72**	**350.17**	**73.41**	**12.85**	**C0529-105-4750-S**	**3.795**	**96.38**	**60.99**	**271.28**	**63.84**	**11.17**
C0529-105-5000-M	**0.529**	**13.44**	**0.105**	**2.67**	**5.000**	**127.00**	**3.869**	**98.26**	**3.852**	**97.85**	**78.72**	**350.17**	**69.58**	**12.18**	**C0529-105-5000-S**	**3.992**	**101.40**	**60.99**	**271.28**	**60.51**	**10.59**
C0529-105-5250-M	**0.529**	**13.44**	**0.105**	**2.67**	**5.250**	**133.35**	**4.060**	**103.11**	**4.042**	**102.67**	**78.72**	**350.17**	**66.13**	**11.57**	**C0529-105-5250-S**	**4.189**	**106.41**	**60.99**	**271.28**	**57.51**	**10.06**
C0529-105-5500-M	**0.529**	**13.44**	**0.105**	**2.67**	**5.500**	**139.70**	**4.251**	**107.96**	**4.232**	**107.48**	**78.72**	**350.17**	**63.01**	**11.03**	**C0529-105-5500-S**	**4.387**	**111.43**	**60.99**	**271.28**	**54.79**	**9.59**
C0529-105-5750-M	**0.529**	**13.44**	**0.105**	**2.67**	**5.750**	**146.05**	**4.442**	**112.82**	**4.421**	**112.30**	**78.72**	**350.17**	**60.16**	**10.53**	**C0529-105-5750-S**	**4.584**	**116.44**	**60.99**	**271.28**	**52.32**	**9.16**
C0529-105-6000-M	**0.529**	**13.44**	**0.105**	**2.67**	**6.000**	**152.40**	**4.632**	**117.67**	**4.611**	**117.11**	**78.72**	**350.17**	**57.57**	**10.07**	**C0529-105-6000-S**	**4.782**	**121.45**	**60.99**	**271.28**	**50.06**	**8.76**
C0529-105-6250-M	**0.529**	**13.44**	**0.105**	**2.67**	**6.250**	**158.75**	**4.823**	**122.52**	**4.800**	**121.93**	**78.72**	**350.17**	**55.18**	**9.66**	**C0529-105-6250-S**	**4.979**	**126.47**	**60.99**	**271.28**	**47.99**	**8.40**
C0529-105-6500-M	**0.529**	**13.44**	**0.105**	**2.67**	**6.500**	**165.10**	**5.014**	**127.37**	**4.990**	**126.74**	**78.72**	**350.17**	**52.99**	**9.27**	**C0529-105-6500-S**	**5.176**	**131.48**	**60.99**	**271.28**	**46.08**	**8.06**
C0529-105-6750-M	**0.529**	**13.44**	**0.105**	**2.67**	**6.750**	**171.45**	**5.205**	**132.22**	**5.179**	**131.56**	**78.72**	**350.17**	**50.96**	**8.92**	**C0529-105-6750-S**	**5.374**	**136.50**	**60.99**	**271.28**	**44.32**	**7.76**
C0529-105-7000-M	**0.529**	**13.44**	**0.105**	**2.67**	**7.000**	**177.80**	**5.396**	**137.07**	**5.369**	**136.37**	**78.72**	**350.17**	**49.09**	**8.59**	**C0529-105-7000-S**	**5.571**	**141.51**	**60.99**	**271.28**	**42.68**	**7.47**
C0529-105-7500-M	**0.529**	**13.44**	**0.105**	**2.67**	**7.500**	**190.50**	**5.778**	**146.77**	**5.748**	**146.00**	**78.72**	**350.17**	**45.72**	**8.00**	**C0529-105-7500-S**	**5.966**	**151.54**	**60.99**	**271.28**	**39.76**	**6.96**
C0529-105-8000-M	**0.529**	**13.44**	**0.105**	**2.67**	**8.000**	**203.20**	**6.160**	**156.47**	**6.127**	**155.63**	**78.72**	**350.17**	**42.79**	**7.49**	**C0529-105-8000-S**	**6.361**	**161.56**	**60.99**	**271.28**	**37.21**	**6.51**
D12050	0.531	13.50	0.039	1.00	0.945	24.00	0.370	9.40	0.217	5.50	4.94	21.97	8.51	1.49	D22050	0.370	9.40	4.11	18.30	7.09	1.24
D12060	0.531	13.50	0.039	1.00	1.437	36.50	0.528	13.40	0.295	7.50	4.94	21.97	5.43	0.95	D22060	0.528	13.40	4.11	18.30	4.51	0.79
D12070	0.531	13.50	0.039	1.00	2.185	55.50	0.764	19.40	0.413	10.50	4.94	21.97	3.49	0.61	D22070	0.764	19.40	4.11	18.30	2.91	0.51
D12080	0.531	13.50	0.039	1.00	3.169	80.50	1.079	27.40	0.571	14.50	4.94	21.97	2.34	0.41	D22080	1.079	27.40	4.11	18.30	1.94	0.34
D12090	0.531	13.50	0.039	1.00	4.528	115.00	1.551	39.40	0.807	20.50	4.94	21.97	1.60	0.28	D22090	1.551	39.40	4.11	18.30	1.31	0.23
C0540-041-0500-M	**0.540**	**13.72**	**0.041**	**1.04**	**0.500**	**12.70**	**0.209**	**5.30**	**0.141**	**3.59**	**6.12**	**27.21**	**21.00**	**3.68**	**C0540-041-0500-S**	**0.234**	**5.94**	**4.65**	**20.70**	**17.49**	**3.06**
C0540-041-0625-M	**0.540**	**13.72**	**0.041**	**1.04**	**0.625**	**15.88**	**0.250**	**6.34**	**0.163**	**4.14**	**6.12**	**27.21**	**16.30**	**2.85**	**C0540-041-0625-S**	**0.282**	**7.17**	**4.65**	**20.70**	**13.58**	**2.38**
C0540-041-0750-M	**0.540**	**13.72**	**0.041**	**1.04**	**0.750**	**19.05**	**0.290**	**7.37**	**0.185**	**4.69**	**6.12**	**27.21**	**13.30**	**2.33**	**C0540-041-0750-S**	**0.330**	**8.38**	**4.65**	**20.70**	**11.08**	**1.94**
C0540-041-0875-M	**0.540**	**13.72**	**0.041**	**1.04**	**0.875**	**22.23**	**0.329**	**8.35**	**0.207**	**5.25**	**6.12**	**27.21**	**11.20**	**1.96**	**C0540-041-0875-S**	**0.376**	**9.56**	**4.65**	**20.70**	**9.33**	**1.63**
C0540-041-1000-M	**0.540**	**13.72**	**0.041**	**1.04**	**1.000**	**25.40**	**0.369**	**9.38**	**0.228**	**5.80**	**6.12**	**27.21**	**9.70**	**1.70**	**C0540-041-1000-S**	**0.424**	**10.77**	**4.65**	**20.70**	**8.08**	**1.41**
C0540-041-1250-M	**0.540**	**13.72**	**0.041**	**1.04**	**1.250**	**31.75**	**0.445**	**11.30**	**0.271**	**6.89**	**6.12**	**27.21**	**7.60**	**1.33**	**C0540-041-1250-S**	**0.515**	**13.08**	**4.65**	**20.70**	**6.33**	**1.11**
C0540-041-1500-M	**0.540**	**13.72**	**0.041**	**1.04**	**1.500**	**38.10**	**0.529**	**13.44**	**0.309**	**7.86**	**6.12**	**27.21**	**6.30**	**1.10**	**C0540-041-1500-S**	**0.613**	**15.58**	**4.65**	**20.70**	**5.25**	**0.92**
C0540-041-1750-M	**0.540**	**13.72**	**0.041**	**1.04**	**1.750**	**44.45**	**0.596**	**15.13**	**0.352**	**8.93**	**6.12**	**27.21**	**5.30**	**0.93**	**C0540-041-1750-S**	**0.696**	**17.68**	**4.65**	**20.70**	**4.42**	**0.77**
C0540-041-2000-M	**0.540**	**13.72**	**0.041**	**1.04**	**2.000**	**50.80**	**0.670**	**17.02**	**0.392**	**9.96**	**6.12**	**27.21**	**4.60**	**0.81**	**C0540-041-2000-S**	**0.786**	**19.96**	**4.65**	**20.70**	**3.83**	**0.67**
C0540-041-2250-M	**0.540**	**13.72**	**0.041**	**1.04**	**2.250**	**57.15**	**0.758**	**19.25**	**0.429**	**10.91**	**6.12**	**27.21**	**4.10**	**0.72**	**C0540-041-2250-S**	**0.888**	**22.55**	**4.65**	**20.70**	**3.42**	**0.60**
C0540-041-2500-M	**0.540**	**13.72**	**0.041**	**1.04**	**2.500**	**63.50**	**0.847**	**21.50**	**0.466**	**11.85**	**6.12**	**27.21**	**3.70**	**0.65**	**C0540-041-2500-S**	**0.990**	**25.16**	**4.65**	**20.70**	**3.08**	**0.54**
C0540-041-2750-M	**0.540**	**13.72**	**0.041**	**1.04**	**2.750**	**69.85**	**0.896**	**22.76**	**0.513**	**13.02**	**6.12**	**27.21**	**3.30**	**0.58**	**C0540-041-2750-S**	**1.058**	**26.86**	**4.65**	**20.70**	**2.75**	**0.48**
C0540-041-3000-M	**0.540**	**13.72**	**0.041**	**1.04**	**3.000**	**76.20**	**0.961**	**24.40**	**0.555**	**14.10**	**6.12**	**27.21**	**3.00**	**0.53**	**C0540-041-3000-S**	**1.138**	**28.91**	**4.65**	**20.70**	**2.50**	**0.44**
C0540-046-0500-M	**0.540**	**13.72**	**0.046**	**1.17**	**0.500**	**12.70**	**0.228**	**5.79**	**0.168**	**4.26**	**8.44**	**37.54**	**31.00**	**5.43**	**C0540-046-0500-S**	**0.251**	**6.38**	**6.42**	**28.57**	**25.82**	**4.52**
C0540-046-0625-M	**0.540**	**13.72**	**0.046**	**1.17**	**0.625**	**15.88**	**0.273**	**6.94**	**0.195**	**4.94**	**8.44**	**37.54**	**24.00**	**4.20**	**C0540-046-0625-S**	**0.304**	**7.72**	**6.42**	**28.57**	**19.99**	**3.50**
C0540-046-0750-M	**0.540**	**13.72**	**0.046**	**1.17**	**0.750**	**19.05**	**0.307**	**7.80**	**0.226**	**5.73**	**8.44**	**37.54**	**19.05**	**3.33**	**C0540-046-0750-S**	**0.345**	**8.77**	**6.42**	**28.57**	**15.87**	**2.78**
C0540-046-0875-M	**0.540**	**13.72**	**0.046**	**1.17**	**0.875**	**22.23**	**0.360**	**9.16**	**0.250**	**6.35**	**8.44**	**37.54**	**16.40**	**2.87**	**C0540-046-0875-S**	**0.405**	**10.28**	**6.42**	**28.57**	**13.66**	**2.39**
C0540-046-1000-M	**0.540**	**13.72**	**0.046**	**1.17**	**1.000**	**25.40**	**0.402**	**10.20**	**0.278**	**7.07**	**8.44**	**37.54**	**14.10**	**2.47**	**C0540-046-1000-S**	**0.453**	**11.51**	**6.42**	**28.57**	**11.75**	**2.06**
C0540-046-1250-M	**0.540**	**13.72**	**0.046**	**1.17**	**1.250**	**31.75**	**0.488**	**12.39**	**0.330**	**8.37**	**8.44**	**37.54**	**11.07**	**1.94**	**C0540-046-1250-S**	**0.554**	**14.06**	**6.42**	**28.57**	**9.22**	**1.61**
C0540-046-1500-M	**0.540**	**13.72**	**0.046**	**1.17**	**1.500**	**38.10**	**0.573**	**14.55**	**0.380**	**9.65**	**8.44**	**37.54**	**9.10**	**1.59**	**C0540-046-1500-S**	**0.653**	**16.58**	**6.42**	**28.57**	**7.58**	**1.33**
C0540-046-1750-M	**0.540**	**13.72**	**0.046**	**1.17**	**1.750**	**44.45**	**0.658**	**16.72**	**0.430**	**10.93**	**8.44**	**37.54**	**7.73**	**1.35**	**C0540-046-1750-S**	**0.753**	**19.12**	**6.42**	**28.57**	**6.44**	**1.13**
C0540-046-2000-M	**0.540**	**13.72**	**0.046**	**1.17**	**2.000**	**50.80**	**0.744**	**18.90**	**0.480**	**12.20**	**8.44**	**37.54**	**6.72**	**1.18**	**C0540-046-2000-S**	**0.853**	**21.66**	**6.42**	**28.57**	**5.60**	**0.98**
C0540-046-2250-M	**0.540**	**13.72**	**0.046**	**1.17**	**2.250**	**57.15**	**0.829**	**21.07**	**0.531**	**13.48**	**8.44**	**37.54**	**5.94**	**1.04**	**C0540-046-2250-S**	**0.952**	**24.18**	**6.42**	**28.57**	**4.95**	**0.87**
C0540-046-2500-M	**0.540**	**13.72**	**0.046**	**1.17**	**2.500**	**63.50**	**0.914**	**23.21**	**0.581**	**14.77**	**8.44**	**37.54**	**5.32**	**0.93**	**C0540-046-2500-S**	**1.051**	**26.69**	**6.42**	**28.57**	**4.43**	**0.78**
C0540-046-2750-M	**0.540**	**13.72**	**0.046**	**1.17**	**2.750**	**69.85**	**0.999**	**25.38**	**0.632**	**16.04**	**8.44**	**37.54**	**4.82**	**0.84**	**C0540-046-2750-S**	**1.151**	**29.22**	**6.42**	**28.57**	**4.02**	**0.70**
C0540-046-3000-M	**0.540**	**13.72**	**0.046**	**1.17**	**3.000**	**76.20**	**1.086**	**27.60**	**0.681**	**17.31**	**8.44**	**37.54**	**4.41**	**0.77**	**C0540-046-3000-S**	**1.252**	**31.80**	**6.42**	**28.57**	**3.67**	**0.64**
C0540-054-0500-M	**0.540**	**13.72**	**0.054**	**1.37**	**0.500**	**12.70**	**0.270**	**6.85**	**0.205**	**5.21**	**13.19**	**58.66**	**57.30**	**10.03**	**C0540-054-0500-S**	**0.290**	**7.36**	**10.03**	**44.61**	**47.73**	**8.35**

Part Numbers with an "*" are squared and not ground. **Part Numbers in bold** represent the newly expanded Associated Spring RAYMOND compression spring offering.

MUSIC WIRE

Catalog #	Outside Diameter (OD)		Wire Diameter (d)		Free Length (L) Approx		Load Length (L_1)		Solid Height (Sh) Approx		Load (P) at L_1		Spring Rate (R)	
	in	mm	in	mm	in	mm	in	mm	in	mm	lb	N	lb/in	N/mm
C0540-054-0625-M	**0.540**	**13.72**	**0.054**	**1.37**	**0.625**	**15.88**	**0.321**	**8.16**	**0.243**	**6.17**	**13.19**	**58.66**	**43.40**	**7.60**
C0540-054-0750-M	**0.540**	**13.72**	**0.054**	**1.37**	**0.750**	**19.05**	**0.373**	**9.48**	**0.280**	**7.11**	**13.19**	**58.66**	**35.00**	**6.13**
C0540-054-0875-M	**0.540**	**13.72**	**0.054**	**1.37**	**0.875**	**22.23**	**0.425**	**10.79**	**0.317**	**8.06**	**13.19**	**58.66**	**29.30**	**5.13**
C0540-054-1000-M	**0.540**	**13.72**	**0.054**	**1.37**	**1.000**	**25.40**	**0.477**	**12.11**	**0.353**	**8.97**	**13.19**	**58.66**	**25.20**	**4.41**
C0540-054-1250-M	**0.540**	**13.72**	**0.054**	**1.37**	**1.250**	**31.75**	**0.581**	**14.75**	**0.420**	**10.66**	**13.19**	**58.66**	**19.70**	**3.45**
C0540-054-1500-M	**0.540**	**13.72**	**0.054**	**1.37**	**1.500**	**38.10**	**0.681**	**17.30**	**0.488**	**12.41**	**13.19**	**58.66**	**16.10**	**2.82**
C0540-054-1750-M	**0.540**	**13.72**	**0.054**	**1.37**	**1.750**	**44.45**	**0.787**	**20.00**	**0.554**	**14.07**	**13.19**	**58.66**	**13.70**	**2.40**
C0540-054-2000-M	**0.540**	**13.72**	**0.054**	**1.37**	**2.000**	**50.80**	**0.892**	**22.65**	**0.621**	**15.77**	**13.19**	**58.66**	**11.90**	**2.08**
C0540-054-2250-M	**0.540**	**13.72**	**0.054**	**1.37**	**2.250**	**57.15**	**0.994**	**25.25**	**0.688**	**17.49**	**13.19**	**58.66**	**10.50**	**1.84**
C0540-054-2500-M	**0.540**	**13.72**	**0.054**	**1.37**	**2.500**	**63.50**	**1.097**	**27.87**	**0.756**	**19.19**	**13.19**	**58.66**	**9.40**	**1.65**
C0540-054-2750-M	**0.540**	**13.72**	**0.054**	**1.37**	**2.750**	**69.85**	**1.199**	**30.44**	**0.824**	**20.92**	**13.19**	**58.66**	**8.50**	**1.49**
C0540-054-3000-M	**0.540**	**13.72**	**0.054**	**1.37**	**3.000**	**76.20**	**1.301**	**33.04**	**0.891**	**22.64**	**13.19**	**58.66**	**7.76**	**1.36**
C0540-058-0500-M	**0.540**	**13.72**	**0.058**	**1.47**	**0.500**	**12.70**	**0.288**	**7.31**	**0.224**	**5.70**	**16.08**	**71.52**	**75.80**	**13.27**
C0540-058-0625-M	**0.540**	**13.72**	**0.058**	**1.47**	**0.625**	**15.88**	**0.344**	**8.74**	**0.267**	**6.77**	**16.08**	**71.52**	**57.20**	**10.01**
C0540-058-0750-M	**0.540**	**13.72**	**0.058**	**1.47**	**0.750**	**19.05**	**0.400**	**10.15**	**0.309**	**7.85**	**16.08**	**71.52**	**45.90**	**8.03**
C0540-058-0875-M	**0.540**	**13.72**	**0.058**	**1.47**	**0.875**	**22.23**	**0.456**	**11.59**	**0.351**	**8.91**	**16.08**	**71.52**	**38.40**	**6.72**
C0540-058-1000-M	**0.540**	**13.72**	**0.058**	**1.47**	**1.000**	**25.40**	**0.513**	**13.03**	**0.390**	**9.90**	**16.08**	**71.52**	**33.00**	**5.78**
C0540-058-1250-M	**0.540**	**13.72**	**0.058**	**1.47**	**1.250**	**31.75**	**0.624**	**15.86**	**0.466**	**11.84**	**16.08**	**71.52**	**25.70**	**4.50**
C0540-058-1500-M	**0.540**	**13.72**	**0.058**	**1.47**	**1.500**	**38.10**	**0.734**	**18.65**	**0.543**	**13.79**	**16.08**	**71.52**	**21.00**	**3.68**
C0540-058-1750-M	**0.540**	**13.72**	**0.058**	**1.47**	**1.750**	**44.45**	**0.847**	**21.51**	**0.619**	**15.72**	**16.08**	**71.52**	**17.80**	**3.12**
C0540-058-2000-M	**0.540**	**13.72**	**0.058**	**1.47**	**2.000**	**50.80**	**0.963**	**24.45**	**0.693**	**17.59**	**16.08**	**71.52**	**15.50**	**2.71**
C0540-058-2250-M	**0.540**	**13.72**	**0.058**	**1.47**	**2.250**	**57.15**	**1.076**	**27.34**	**0.768**	**19.50**	**16.08**	**71.52**	**13.70**	**2.40**
C0540-058-2500-M	**0.540**	**13.72**	**0.058**	**1.47**	**2.500**	**63.50**	**1.182**	**30.03**	**0.847**	**21.51**	**16.08**	**71.52**	**12.20**	**2.14**
C0540-058-2750-M	**0.540**	**13.72**	**0.058**	**1.47**	**2.750**	**69.85**	**1.288**	**32.73**	**0.926**	**23.52**	**16.08**	**71.52**	**11.00**	**1.93**
C0540-058-3000-M	**0.540**	**13.72**	**0.058**	**1.47**	**3.000**	**76.20**	**1.408**	**35.77**	**0.998**	**25.34**	**16.08**	**71.52**	**10.10**	**1.77**
C0540-063-0500-M	**0.540**	**13.72**	**0.063**	**1.60**	**0.500**	**12.70**	**0.308**	**7.83**	**0.248**	**6.31**	**20.21**	**89.89**	**105.40**	**18.45**
C0540-063-0625-M	**0.540**	**13.72**	**0.063**	**1.60**	**0.625**	**15.88**	**0.369**	**9.38**	**0.297**	**7.54**	**20.21**	**89.89**	**79.00**	**13.83**
C0540-063-0750-M	**0.540**	**13.72**	**0.063**	**1.60**	**0.750**	**19.05**	**0.430**	**10.93**	**0.346**	**8.78**	**20.21**	**89.89**	**63.20**	**11.06**
C0540-063-0875-M	**0.540**	**13.72**	**0.063**	**1.60**	**0.875**	**22.23**	**0.491**	**12.47**	**0.394**	**10.02**	**20.21**	**89.89**	**52.60**	**9.21**
C0540-063-1000-M	**0.540**	**13.72**	**0.063**	**1.60**	**1.000**	**25.40**	**0.552**	**14.02**	**0.438**	**11.13**	**20.21**	**89.89**	**45.10**	**7.89**
C0540-063-1250-M	**0.540**	**13.72**	**0.063**	**1.60**	**1.250**	**31.75**	**0.674**	**17.13**	**0.526**	**13.35**	**20.21**	**89.89**	**35.10**	**6.14**
C0540-063-1500-M	**0.540**	**13.72**	**0.063**	**1.60**	**1.500**	**38.10**	**0.796**	**20.22**	**0.613**	**15.58**	**20.21**	**89.89**	**28.70**	**5.02**
C0540-063-1750-M	**0.540**	**13.72**	**0.063**	**1.60**	**1.750**	**44.45**	**0.918**	**23.33**	**0.700**	**17.79**	**20.21**	**89.89**	**24.30**	**4.25**
C0540-063-2000-M	**0.540**	**13.72**	**0.063**	**1.60**	**2.000**	**50.80**	**1.038**	**26.36**	**0.790**	**20.05**	**20.21**	**89.89**	**21.00**	**3.68**
C0540-063-2250-M	**0.540**	**13.72**	**0.063**	**1.60**	**2.250**	**57.15**	**1.164**	**29.55**	**0.874**	**22.21**	**20.21**	**89.89**	**18.60**	**3.26**
C0540-063-2500-M	**0.540**	**13.72**	**0.063**	**1.60**	**2.500**	**63.50**	**1.283**	**32.58**	**0.964**	**24.48**	**20.21**	**89.89**	**16.60**	**2.91**
C0540-063-2750-M	**0.540**	**13.72**	**0.063**	**1.60**	**2.750**	**69.85**	**1.403**	**35.63**	**1.052**	**26.73**	**20.21**	**89.89**	**15.00**	**2.63**
C0540-063-3000-M	**0.540**	**13.72**	**0.063**	**1.60**	**3.000**	**76.20**	**1.525**	**38.74**	**1.140**	**28.95**	**20.21**	**89.89**	**13.70**	**2.40**
C0540-067-0500-M	**0.540**	**13.72**	**0.067**	**1.70**	**0.500**	**12.70**	**0.325**	**8.26**	**0.266**	**6.75**	**23.94**	**106.51**	**137.00**	**23.98**
C0540-067-0625-M	**0.540**	**13.72**	**0.067**	**1.70**	**0.625**	**15.88**	**0.390**	**9.91**	**0.319**	**8.11**	**23.94**	**106.51**	**102.00**	**17.85**
C0540-067-0750-M	**0.540**	**13.72**	**0.067**	**1.70**	**0.750**	**19.05**	**0.455**	**11.56**	**0.373**	**9.47**	**23.94**	**106.51**	**81.20**	**14.21**
C0540-067-0875-M	**0.540**	**13.72**	**0.067**	**1.70**	**0.875**	**22.23**	**0.520**	**13.21**	**0.426**	**10.82**	**23.94**	**106.51**	**67.50**	**11.81**
C0540-067-1000-M	**0.540**	**13.72**	**0.067**	**1.70**	**1.000**	**25.40**	**0.584**	**14.82**	**0.476**	**12.08**	**23.94**	**106.51**	**57.50**	**10.06**
C0540-067-1250-M	**0.540**	**13.72**	**0.067**	**1.70**	**1.250**	**31.75**	**0.716**	**18.17**	**0.571**	**14.49**	**23.94**	**106.51**	**44.80**	**7.84**
C0540-067-1500-M	**0.540**	**13.72**	**0.067**	**1.70**	**1.500**	**38.10**	**0.846**	**21.48**	**0.667**	**16.94**	**23.94**	**106.51**	**36.60**	**6.41**
C0540-067-1750-M	**0.540**	**13.72**	**0.067**	**1.70**	**1.750**	**44.45**	**0.978**	**24.83**	**0.762**	**19.35**	**23.94**	**106.51**	**31.00**	**5.43**
C0540-067-2000-M	**0.540**	**13.72**	**0.067**	**1.70**	**2.000**	**50.80**	**1.107**	**28.11**	**0.859**	**21.82**	**23.94**	**106.51**	**26.80**	**4.69**
C0540-067-2250-M	**0.540**	**13.72**	**0.067**	**1.70**	**2.250**	**57.15**	**1.235**	**31.38**	**0.957**	**24.30**	**23.94**	**106.51**	**23.60**	**4.13**
C0540-067-2500-M	**0.540**	**13.72**	**0.067**	**1.70**	**2.500**	**63.50**	**1.365**	**34.68**	**1.053**	**26.76**	**23.94**	**106.51**	**21.10**	**3.69**
C0540-067-2750-M	**0.540**	**13.72**	**0.067**	**1.70**	**2.750**	**69.85**	**1.496**	**38.01**	**1.149**	**29.18**	**23.94**	**106.51**	**19.10**	**3.34**
C0540-067-3000-M	**0.540**	**13.72**	**0.067**	**1.70**	**3.000**	**76.20**	**1.632**	**41.45**	**1.241**	**31.52**	**23.94**	**106.51**	**17.50**	**3.06**
D12250	0.541	13.75	0.049	1.25	1.063	27.00	0.323	8.20	0.271	6.88	15.52	69.04	20.74	3.63
D12260	0.541	13.75	0.049	1.25	1.634	41.50	0.457	11.60	0.369	9.38	15.52	69.04	13.20	2.31
D12270	0.541	13.75	0.049	1.25	2.461	62.50	0.650	16.50	0.517	13.13	15.52	69.04	8.51	1.49
D12280	0.541	13.75	0.049	1.25	3.563	90.50	0.909	23.10	0.714	18.13	15.52	69.04	5.83	1.02
D12290	0.541	13.75	0.049	1.25	5.118	130.00	1.295	32.90	1.009	25.63	15.52	69.04	3.94	0.69
D13190	0.551	14.00	0.110	2.80	0.807	20.50	0.646	16.40	0.606	15.40	116.62	518.77	728.51	127.49
D13200	0.551	14.00	0.110	2.80	1.142	29.00	0.878	22.30	0.827	21.00	116.62	518.77	359.20	62.86
D13210	0.551	14.00	0.110	2.80	1.807	45.90	1.374	34.90	1.268	32.20	116.62	518.77	267.89	46.88
D13220	0.551	14.00	0.110	2.80	2.811	71.40	2.098	53.30	1.929	49.00	116.62	518.77	164.17	28.73
D12450	0.555	14.10	0.063	1.60	0.945	24.00	0.394	10.00	0.346	8.80	30.42	135.33	55.77	9.76
D12460	0.555	14.10	0.063	1.60	1.417	36.00	0.555	14.10	0.472	12.00	30.42	135.33	35.60	6.23
D12470	0.555	14.10	0.063	1.60	2.106	53.50	0.791	20.10	0.661	16.80	30.42	135.33	23.09	4.04
D12480	0.555	14.10	0.063	1.60	3.071	78.00	1.102	28.00	0.913	23.20	30.42	135.33	15.60	2.73

STAINLESS STEEL

Catalog #	Load Length (L_1)		Load (P) at L_1		Spring Rate (R)	
	in	mm	lb	N	lb/in	N/mm
C0540-054-0625-S	**0.348**	**8.83**	**10.03**	**44.61**	**36.15**	**6.33**
C0540-054-0750-S	**0.406**	**10.31**	**10.03**	**44.61**	**29.16**	**5.10**
C0540-054-0875-S	**0.464**	**11.79**	**10.03**	**44.61**	**24.41**	**4.27**
C0540-054-1000-S	**0.522**	**13.26**	**10.03**	**44.61**	**20.99**	**3.67**
C0540-054-1250-S	**0.639**	**16.23**	**10.03**	**44.61**	**16.41**	**2.87**
C0540-054-1500-S	**0.752**	**19.11**	**10.03**	**44.61**	**13.41**	**2.35**
C0540-054-1750-S	**0.871**	**22.13**	**10.03**	**44.61**	**11.41**	**2.00**
C0540-054-2000-S	**0.988**	**25.10**	**10.03**	**44.61**	**9.91**	**1.73**
C0540-054-2250-S	**1.103**	**28.03**	**10.03**	**44.61**	**8.75**	**1.53**
C0540-054-2500-S	**1.219**	**30.97**	**10.03**	**44.61**	**7.83**	**1.37**
C0540-054-2750-S	**1.334**	**33.87**	**10.03**	**44.61**	**7.08**	**1.24**
C0540-054-3000-S	**1.448**	**36.79**	**10.03**	**44.61**	**6.46**	**1.13**
C0540-058-0500-S	**0.307**	**7.79**	**12.22**	**54.34**	**63.14**	**11.05**
C0540-058-0625-S	**0.369**	**9.36**	**12.22**	**54.34**	**47.65**	**8.34**
C0540-058-0750-S	**0.430**	**10.93**	**12.22**	**54.34**	**38.24**	**6.69**
C0540-058-0875-S	**0.493**	**12.52**	**12.22**	**54.34**	**31.99**	**5.60**
C0540-058-1000-S	**0.556**	**14.11**	**12.22**	**54.34**	**27.49**	**4.81**
C0540-058-1250-S	**0.679**	**17.26**	**12.22**	**54.34**	**21.41**	**3.75**
C0540-058-1500-S	**0.802**	**20.36**	**12.22**	**54.34**	**17.49**	**3.06**
C0540-058-1750-S	**0.926**	**23.52**	**12.22**	**54.34**	**14.83**	**2.59**
C0540-058-2000-S	**1.054**	**26.77**	**12.22**	**54.34**	**12.91**	**2.26**
C0540-058-2250-S	**1.180**	**29.96**	**12.22**	**54.34**	**11.41**	**2.00**
C0540-058-2500-S	**1.298**	**32.97**	**12.22**	**54.34**	**10.16**	**1.78**
C0540-058-2750-S	**1.417**	**35.99**	**12.22**	**54.34**	**9.16**	**1.60**
C0540-058-3000-S	**1.548**	**39.32**	**12.22**	**54.34**	**8.41**	**1.47**
C0540-063-0500-S	**0.325**	**8.26**	**15.33**	**68.19**	**87.80**	**15.36**
C0540-063-0625-S	**0.392**	**9.96**	**15.33**	**68.19**	**65.81**	**11.52**
C0540-063-0750-S	**0.459**	**11.65**	**15.33**	**68.19**	**52.65**	**9.21**
C0540-063-0875-S	**0.525**	**13.34**	**15.33**	**68.19**	**43.82**	**7.67**
C0540-063-1000-S	**0.592**	**15.04**	**15.33**	**68.19**	**37.57**	**6.57**
C0540-063-1250-S	**0.726**	**18.43**	**15.33**	**68.19**	**29.24**	**5.12**
C0540-063-1500-S	**0.859**	**21.81**	**15.33**	**68.19**	**23.91**	**4.18**
C0540-063-1750-S	**0.993**	**25.21**	**15.33**	**68.19**	**20.24**	**3.54**
C0540-063-2000-S	**1.124**	**28.54**	**15.33**	**68.19**	**17.49**	**3.06**
C0540-063-2250-S	**1.261**	**32.02**	**15.33**	**68.19**	**15.49**	**2.71**
C0540-063-2500-S	**1.391**	**35.34**	**15.33**	**68.19**	**13.83**	**2.42**
C0540-063-2750-S	**1.523**	**38.69**	**15.33**	**68.19**	**12.50**	**2.19**
C0540-063-3000-S	**1.657**	**42.08**	**15.33**	**68.19**	**11.41**	**2.00**
C0540-067-0500-S	**0.341**	**8.66**	**18.14**	**80.68**	**114.12**	**19.97**
C0540-067-0625-S	**0.412**	**10.45**	**18.14**	**80.68**	**84.97**	**14.87**
C0540-067-0750-S	**0.482**	**12.24**	**18.14**	**80.68**	**67.64**	**11.84**
C0540-067-0875-S	**0.552**	**14.03**	**18.14**	**80.68**	**56.23**	**9.84**
C0540-067-1000-S	**0.621**	**15.78**	**18.14**	**80.68**	**47.90**	**8.38**
C0540-067-1250-S	**0.764**	**19.41**	**18.14**	**80.68**	**37.32**	**6.53**
C0540-067-1500-S	**0.905**	**22.99**	**18.14**	**80.68**	**30.49**	**5.34**
C0540-067-1750-S	**1.048**	**26.61**	**18.14**	**80.68**	**25.82**	**4.52**
C0540-067-2000-S	**1.188**	**30.16**	**18.14**	**80.68**	**22.32**	**3.91**
C0540-067-2250-S	**1.327**	**33.72**	**18.14**	**80.68**	**19.66**	**3.44**
C0540-067-2500-S	**1.468**	**37.29**	**18.14**	**80.68**	**17.58**	**3.08**
C0540-067-2750-S	**1.610**	**40.89**	**18.14**	**80.68**	**15.91**	**2.78**
C0540-067-3000-S	**1.756**	**44.60**	**18.14**	**80.68**	**14.58**	**2.55**
D22250	0.323	8.20	12.93	57.51	17.26	3.02
D22260	0.457	11.60	12.93	57.51	10.97	1.92
D22270	0.650	16.50	12.93	57.51	7.09	1.24
D22280	0.909	23.10	12.93	57.51	4.86	0.85
D22290	1.295	32.90	12.93	57.51	3.26	0.57
D23190	0.646	16.40	97.19	432.31	606.86	106.20
D23200	0.878	22.30	97.19	432.31	299.20	52.36
D23210	1.374	34.90	97.19	432.31	223.14	39.05
D23220	2.098	53.30	97.19	432.31	136.74	23.93
D22450	0.394	10.00	25.34	112.73	46.46	8.13
D22460	0.555	14.10	25.34	112.73	29.66	5.19
D22470	0.791	20.10	25.34	112.73	19.26	3.37
D22480	1.102	28.00	25.34	112.73	12.97	2.27

FOR INFORMATION ON ALTERNATIVE FINISHES, SEE PAGE 311

Part Numbers with an "*" are squared and not ground. **Part Numbers in bold** represent the newly expanded Associated Spring RAYMOND compression spring offering.

MUSIC WIRE															STAINLESS STEEL						
Catalog #	Outside Diameter (OD)		Wire Diameter (d)		Free Length (L) Approx		Load Length (L_1)		Solid Height (Sh) Approx		Load (P) at L_1		Spring Rate (R)		Catalog #	Load Length (L_1)		Load (P) at L_1		Spring Rate (R)	
	in	mm	in	mm	in	mm	in	mm	in	mm	lb	N	lb/in	N/mm		in	mm	lb	N	lb/in	N/mm
D12490	0.555	14.10	0.063	1.60	4.528	115.00	1.571	39.90	1.291	32.80	30.42	135.33	10.51	1.84	D22490	1.571	39.90	25.34	112.73	8.74	1.53
C0563-054-0625-M	**0.563**	**14.30**	**0.054**	**1.37**	**0.625**	**15.88**	**0.312**	**7.93**	**0.270**	**6.85**	**10.06**	**44.76**	**32.16**	**5.63**	**C0563-054-0625-S**	**0.312**	**7.93**	**8.38**	**37.28**	**26.79**	**4.69**
C0563-054-0750-M	**0.563**	**14.30**	**0.054**	**1.37**	**0.750**	**19.05**	**0.366**	**9.31**	**0.314**	**7.97**	**9.93**	**44.19**	**25.90**	**4.53**	**C0563-054-0750-S**	**0.366**	**9.31**	**8.28**	**36.81**	**21.58**	**3.78**
C0563-054-0875-M	**0.563**	**14.30**	**0.054**	**1.37**	**0.875**	**22.23**	**0.419**	**10.65**	**0.356**	**9.04**	**9.88**	**43.95**	**21.68**	**3.79**	**C0563-054-0875-S**	**0.419**	**10.65**	**8.23**	**36.61**	**18.06**	**3.16**
C0563-054-1000-M	**0.563**	**14.30**	**0.054**	**1.37**	**1.000**	**25.40**	**0.470**	**11.94**	**0.395**	**10.04**	**9.88**	**43.94**	**18.64**	**3.26**	**C0563-054-1000-S**	**0.470**	**11.94**	**8.23**	**36.60**	**15.53**	**2.72**
C0563-054-1250-M	**0.563**	**14.30**	**0.054**	**1.37**	**1.250**	**31.75**	**0.572**	**14.52**	**0.474**	**12.05**	**9.88**	**43.94**	**14.56**	**2.55**	**C0563-054-1250-S**	**0.572**	**14.52**	**8.23**	**36.61**	**12.13**	**2.12**
C0563-054-1500-M	**0.563**	**14.30**	**0.054**	**1.37**	**1.500**	**38.10**	**0.673**	**17.09**	**0.553**	**14.05**	**9.88**	**43.97**	**11.95**	**2.09**	**C0563-054-1500-S**	**0.673**	**17.09**	**8.23**	**36.63**	**9.95**	**1.74**
C0563-054-1750-M	**0.563**	**14.30**	**0.054**	**1.37**	**1.750**	**44.45**	**0.774**	**19.67**	**0.632**	**16.06**	**9.88**	**43.97**	**10.13**	**1.77**	**C0563-054-1750-S**	**0.774**	**19.67**	**8.23**	**36.62**	**8.44**	**1.48**
C0563-054-2000-M	**0.563**	**14.30**	**0.054**	**1.37**	**2.000**	**50.80**	**0.876**	**22.25**	**0.711**	**18.07**	**9.88**	**43.96**	**8.79**	**1.54**	**C0563-054-2000-S**	**0.876**	**22.25**	**8.23**	**36.62**	**7.32**	**1.28**
C0563-054-2250-M	**0.563**	**14.30**	**0.054**	**1.37**	**2.250**	**57.15**	**0.978**	**24.83**	**0.791**	**20.08**	**9.87**	**43.92**	**7.76**	**1.36**	**C0563-054-2250-S**	**0.978**	**24.83**	**8.23**	**36.59**	**6.46**	**1.13**
C0563-054-2500-M	**0.563**	**14.30**	**0.054**	**1.37**	**2.500**	**63.50**	**1.079**	**27.41**	**0.870**	**22.09**	**9.88**	**43.93**	**6.95**	**1.22**	**C0563-054-2500-S**	**1.079**	**27.41**	**8.23**	**36.60**	**5.79**	**1.01**
C0563-054-2750-M	**0.563**	**14.30**	**0.054**	**1.37**	**2.750**	**69.85**	**1.244**	**31.60**	**1.027**	**26.10**	**8.66**	**38.51**	**5.75**	**1.01**	**C0563-054-2750-S**	**1.244**	**31.60**	**7.21**	**32.08**	**4.79**	**0.84**
C0563-054-3000-M	**0.563**	**14.30**	**0.054**	**1.37**	**3.000**	**76.20**	**1.346**	**34.19**	**1.107**	**28.11**	**8.75**	**38.92**	**5.29**	**0.93**	**C0563-054-3000-S**	**1.346**	**34.19**	**7.29**	**32.42**	**4.41**	**0.77**
C0563-054-3250-M	**0.563**	**14.30**	**0.054**	**1.37**	**3.250**	**82.55**	**1.448**	**36.77**	**1.186**	**30.12**	**8.83**	**39.29**	**4.90**	**0.86**	**C0563-054-3250-S**	**1.448**	**36.77**	**7.36**	**32.73**	**4.08**	**0.71**
C0563-054-3500-M	**0.563**	**14.30**	**0.054**	**1.37**	**3.500**	**88.90**	**1.548**	**39.31**	**1.263**	**32.09**	**8.92**	**39.69**	**4.57**	**0.80**	**C0563-054-3500-S**	**1.548**	**39.31**	**7.43**	**33.06**	**3.81**	**0.67**
C0563-054-3750-M	**0.563**	**14.30**	**0.054**	**1.37**	**3.750**	**95.25**	**1.651**	**41.93**	**1.344**	**34.14**	**8.96**	**39.87**	**4.27**	**0.75**	**C0563-054-3750-S**	**1.651**	**41.93**	**7.47**	**33.22**	**3.56**	**0.62**
C0563-092-0750-M	**0.563**	**14.30**	**0.092**	**2.34**	**0.750**	**19.05**	**0.573**	**14.56**	**0.491**	**12.48**	**54.81**	**243.80**	**310.08**	**54.26**	**C0563-092-0750-S**	**0.591**	**15.02**	**40.96**	**182.18**	**258.30**	**45.20**
C0563-092-0875-M	**0.563**	**14.30**	**0.092**	**2.34**	**0.875**	**22.23**	**0.659**	**16.75**	**0.567**	**14.39**	**54.81**	**243.80**	**254.15**	**44.48**	**C0563-092-0875-S**	**0.682**	**17.31**	**40.96**	**182.18**	**211.71**	**37.05**
C0563-092-1000-M	**0.563**	**14.30**	**0.092**	**2.34**	**1.000**	**25.40**	**0.745**	**18.93**	**0.635**	**16.14**	**54.81**	**243.80**	**215.31**	**37.68**	**C0563-092-1000-S**	**0.772**	**19.60**	**40.96**	**182.18**	**179.35**	**31.39**
C0563-092-1250-M	**0.563**	**14.30**	**0.092**	**2.34**	**1.250**	**31.75**	**0.918**	**23.31**	**0.771**	**19.57**	**54.81**	**243.80**	**164.91**	**28.86**	**C0563-092-1250-S**	**0.952**	**24.18**	**40.96**	**182.18**	**137.37**	**24.04**
C0563-092-1500-M	**0.563**	**14.30**	**0.092**	**2.34**	**1.500**	**38.10**	**1.090**	**27.68**	**0.906**	**23.00**	**54.81**	**243.80**	**133.63**	**23.39**	**C0563-092-1500-S**	**1.132**	**28.75**	**40.96**	**182.18**	**111.31**	**19.48**
C0563-092-1750-M	**0.563**	**14.30**	**0.092**	**2.34**	**1.750**	**44.45**	**1.262**	**32.06**	**1.041**	**26.44**	**54.81**	**243.80**	**112.33**	**19.66**	**C0563-092-1750-S**	**1.312**	**33.33**	**40.96**	**182.18**	**93.57**	**16.37**
C0563-092-2000-M	**0.563**	**14.30**	**0.092**	**2.34**	**2.000**	**50.80**	**1.434**	**36.43**	**1.176**	**29.87**	**54.81**	**243.80**	**96.88**	**16.95**	**C0563-092-2000-S**	**1.492**	**37.91**	**40.96**	**182.18**	**80.70**	**14.12**
C0563-092-2250-M	**0.563**	**14.30**	**0.092**	**2.34**	**2.250**	**57.15**	**1.606**	**40.80**	**1.311**	**33.30**	**54.81**	**243.80**	**85.17**	**14.90**	**C0563-092-2250-S**	**1.673**	**42.49**	**40.96**	**182.18**	**70.95**	**12.42**
C0563-092-2500-M	**0.563**	**14.30**	**0.092**	**2.34**	**2.500**	**63.50**	**1.779**	**45.18**	**1.446**	**36.74**	**54.81**	**243.80**	**75.98**	**13.30**	**C0563-092-2500-S**	**1.853**	**47.06**	**40.96**	**182.18**	**63.29**	**11.08**
C0563-092-2750-M	**0.563**	**14.30**	**0.092**	**2.34**	**2.750**	**69.85**	**1.873**	**47.58**	**1.717**	**43.60**	**54.81**	**243.80**	**62.50**	**10.94**	**C0563-092-2750-S**	**1.963**	**49.87**	**40.96**	**182.18**	**52.06**	**9.11**
C0563-092-3000-M	**0.563**	**14.30**	**0.092**	**2.34**	**3.000**	**76.20**	**2.045**	**51.95**	**1.852**	**47.03**	**54.81**	**243.80**	**57.41**	**10.05**	**C0563-092-3000-S**	**2.144**	**54.45**	**40.96**	**182.18**	**47.82**	**8.37**
C0563-092-3250-M	**0.563**	**14.30**	**0.092**	**2.34**	**3.250**	**82.55**	**2.217**	**56.32**	**1.987**	**50.47**	**54.81**	**243.80**	**53.08**	**9.29**	**C0563-092-3250-S**	**2.324**	**59.02**	**40.96**	**182.18**	**44.22**	**7.74**
C0563-092-3500-M	**0.563**	**14.30**	**0.092**	**2.34**	**3.500**	**88.90**	**2.390**	**60.70**	**2.122**	**53.90**	**54.81**	**243.80**	**49.36**	**8.64**	**C0563-092-3500-S**	**2.504**	**63.60**	**40.96**	**182.18**	**41.12**	**7.20**
C0563-092-3750-M	**0.563**	**14.30**	**0.092**	**2.34**	**3.750**	**95.25**	**2.562**	**65.07**	**2.257**	**57.33**	**54.81**	**243.80**	**46.13**	**8.07**	**C0563-092-3750-S**	**2.684**	**68.18**	**40.96**	**182.18**	**38.43**	**6.72**
D12650	0.571	14.50	0.079	2.00	0.886	22.50	0.461	11.70	0.433	11.00	57.10	253.99	136.74	23.93	D22650	0.461	11.70	47.56	211.57	113.89	19.93
D12660	0.571	14.50	0.079	2.00	1.299	33.00	0.646	16.40	0.591	15.00	57.10	253.99	86.86	15.20	D22660	0.646	16.40	47.56	211.57	72.34	12.66
D12670	0.571	14.50	0.079	2.00	1.949	49.50	0.925	23.50	0.827	21.00	57.10	253.99	56.06	9.81	D22670	0.925	23.50	47.56	211.57	46.69	8.17
D12680	0.571	14.50	0.079	2.00	2.795	71.00	1.299	33.00	1.142	29.00	57.10	253.99	38.23	6.69	D22680	1.299	33.00	47.56	211.57	31.83	5.57
D12690	0.571	14.50	0.079	2.00	4.134	105.00	1.858	47.20	1.614	41.00	57.10	253.99	25.83	4.52	D22690	1.858	47.20	47.56	211.57	21.54	3.77
C0588-049-1125-M	**0.588**	**14.94**	**0.049**	**1.25**	**1.125**	**28.58**	**0.426**	**10.81**	**0.317**	**8.06**	**8.87**	**39.47**	**12.69**	**2.22**	**C0588-049-1125-S**	**0.485**	**12.32**	**7.06**	**31.41**	**11.03**	**1.93**
C0588-049-1250-M	**0.588**	**14.94**	**0.049**	**1.25**	**1.250**	**31.75**	**0.466**	**11.83**	**0.344**	**8.73**	**8.87**	**39.47**	**11.31**	**1.98**	**C0588-049-1250-S**	**0.532**	**13.52**	**7.06**	**31.41**	**9.84**	**1.72**
C0588-049-1375-M	**0.588**	**14.94**	**0.049**	**1.25**	**1.375**	**34.93**	**0.506**	**12.84**	**0.370**	**9.39**	**8.87**	**39.47**	**10.21**	**1.79**	**C0588-049-1375-S**	**0.579**	**14.71**	**7.06**	**31.41**	**8.87**	**1.55**
C0588-049-1500-M	**0.588**	**14.94**	**0.049**	**1.25**	**1.500**	**38.10**	**0.545**	**13.85**	**0.396**	**10.05**	**8.87**	**39.47**	**9.30**	**1.63**	**C0588-049-1500-S**	**0.626**	**15.91**	**7.06**	**31.41**	**8.08**	**1.41**
C0588-049-1625-M	**0.588**	**14.94**	**0.049**	**1.25**	**1.625**	**41.28**	**0.585**	**14.87**	**0.422**	**10.72**	**8.87**	**39.47**	**8.53**	**1.49**	**C0588-049-1625-S**	**0.674**	**17.11**	**7.06**	**31.41**	**7.42**	**1.30**
C0588-049-1750-M	**0.588**	**14.94**	**0.049**	**1.25**	**1.750**	**44.45**	**0.625**	**15.88**	**0.448**	**11.38**	**8.87**	**39.47**	**7.89**	**1.38**	**C0588-049-1750-S**	**0.721**	**18.30**	**7.06**	**31.41**	**6.86**	**1.20**
C0588-049-1875-M	**0.588**	**14.94**	**0.049**	**1.25**	**1.875**	**47.63**	**0.665**	**16.89**	**0.474**	**12.04**	**8.87**	**39.47**	**7.33**	**1.28**	**C0588-049-1875-S**	**0.768**	**19.50**	**7.06**	**31.41**	**6.38**	**1.12**
C0588-049-2000-M	**0.588**	**14.94**	**0.049**	**1.25**	**2.000**	**50.80**	**0.705**	**17.91**	**0.500**	**12.71**	**8.87**	**39.47**	**6.85**	**1.20**	**C0588-049-2000-S**	**0.815**	**20.70**	**7.06**	**31.41**	**5.96**	**1.04**
C0588-049-2125-M	**0.588**	**14.94**	**0.049**	**1.25**	**2.125**	**53.98**	**0.745**	**18.92**	**0.526**	**13.37**	**8.87**	**39.47**	**6.43**	**1.13**	**C0588-049-2125-S**	**0.862**	**21.89**	**7.06**	**31.41**	**5.59**	**0.98**
C0588-049-2250-M	**0.588**	**14.94**	**0.049**	**1.25**	**2.250**	**57.15**	**0.785**	**19.93**	**0.553**	**14.03**	**8.87**	**39.47**	**6.06**	**1.06**	**C0588-049-2250-S**	**0.909**	**23.09**	**7.06**	**31.41**	**5.27**	**0.92**
C0588-049-2375-M	**0.588**	**14.94**	**0.049**	**1.25**	**2.375**	**60.33**	**0.825**	**20.95**	**0.579**	**14.70**	**8.87**	**39.47**	**5.72**	**1.00**	**C0588-049-2375-S**	**0.956**	**24.29**	**7.06**	**31.41**	**4.98**	**0.87**
C0588-049-2500-M	**0.588**	**14.94**	**0.049**	**1.25**	**2.500**	**63.50**	**0.865**	**21.96**	**0.605**	**15.36**	**8.87**	**39.47**	**5.43**	**0.95**	**C0588-049-2500-S**	**1.003**	**25.48**	**7.06**	**31.41**	**4.72**	**0.83**
C0588-049-2625-M	**0.588**	**14.94**	**0.049**	**1.25**	**2.625**	**66.68**	**0.904**	**22.97**	**0.631**	**16.02**	**8.87**	**39.47**	**5.16**	**0.90**	**C0588-049-2625-S**	**1.050**	**26.68**	**7.06**	**31.41**	**4.48**	**0.78**
C0588-049-2750-M	**0.588**	**14.94**	**0.049**	**1.25**	**2.750**	**69.85**	**0.944**	**23.99**	**0.657**	**16.69**	**8.87**	**39.47**	**4.91**	**0.86**	**C0588-049-2750-S**	**1.098**	**27.88**	**7.06**	**31.41**	**4.27**	**0.75**
C0588-049-2875-M	**0.588**	**14.94**	**0.049**	**1.25**	**2.875**	**73.03**	**0.984**	**25.00**	**0.683**	**17.35**	**8.87**	**39.47**	**4.69**	**0.82**	**C0588-049-2875-S**	**1.145**	**29.07**	**7.06**	**31.41**	**4.08**	**0.71**
C0588-049-3000-M	**0.588**	**14.94**	**0.049**	**1.25**	**3.000**	**76.20**	**1.024**	**26.01**	**0.709**	**18.02**	**8.87**	**39.47**	**4.49**	**0.79**	**C0588-049-3000-S**	**1.192**	**30.27**	**7.06**	**31.41**	**3.91**	**0.68**
C0588-049-3250-M	**0.588**	**14.94**	**0.049**	**1.25**	**3.250**	**82.55**	**1.104**	**28.04**	**0.761**	**19.34**	**8.87**	**39.47**	**4.13**	**0.72**	**C0588-049-3250-S**	**1.286**	**32.66**	**7.06**	**31.41**	**3.60**	**0.63**
C0588-049-3500-M	**0.588**	**14.94**	**0.049**	**1.25**	**3.500**	**88.90**	**1.184**	**30.07**	**0.814**	**20.67**	**8.87**	**39.47**	**3.83**	**0.67**	**C0588-049-3500-S**	**1.380**	**35.06**	**7.06**	**31.41**	**3.33**	**0.58**
C0588-049-3750-M	**0.588**	**14.94**	**0.049**	**1.25**	**3.750**	**95.25**	**1.264**	**32.09**	**0.866**	**22.00**	**8.87**	**39.47**	**3.57**	**0.62**	**C0588-049-3750-S**	**1.474**	**37.45**	**7.06**	**31.41**	**3.10**	**0.54**
C0588-049-4000-M	**0.588**	**14.94**	**0.049**	**1.25**	**4.000**	**101.60**	**1.343**	**34.12**	**0.918**	**23.32**	**8.87**	**39.47**	**3.34**	**0.58**	**C0588-049-4000-S**	**1.569**	**39.84**	**7.06**	**31.41**	**2.90**	**0.51**
C0588-049-4250-M	**0.588**	**14.94**	**0.049**	**1.25**	**4.250**	**107.95**	**1.423**	**36.15**	**0.970**	**24.65**	**8.87**	**39.47**	**3.14**	**0.55**	**C0588-049-4250-S**	**1.663**	**42.24**	**7.06**	**31.41**	**2.73**	**0.48**
C0588-049-4500-M	**0.588**	**14.94**	**0.049**	**1.25**	**4.500**	**114.30**	**1.503**	**38.17**	**1.023**	**25.98**	**8.87**	**39.47**	**2.96**	**0.52**	**C0588-049-4500-S**	**1.757**	**44.63**	**7.06**	**31.41**	**2.57**	**0.45**
C0588-049-4750-M	**0.588**	**14.94**	**0.049**	**1.25**	**4.750**	**120.65**	**1.583**	**40.20**	**1.075**	**27.30**	**8.87**	**39.47**	**2.80**	**0.49**	**C0588-049-4750-S**	**1.851**	**47.02**	**7.06**	**31.41**	**2.44**	**0.43**
C0588-049-5000-M	**0.588**	**14.94**	**0.049**	**1.25**	**5.000**	**127.00**	**1.662**	**42.23**	**1.127**	**28.63**	**8.87**	**39.47**	**2.66**	**0.47**	**C0588-049-5000-S**	**1.946**	**49.42**	**7.06**	**31.41**	**2.31**	**0.40**
C0588-049-5250-M	**0.588**	**14.94**	**0.049**	**1.25**	**5.250**	**133.35**	**1.742**	**44.25**	**1.179**	**29.96**	**8.87**	**39.47**	**2.53**	**0.44**	**C0588-049-5250-S**	**2.040**	**51.81**	**7.06**	**31.41**	**2.20**	**0.38**
C0588-049-5500-M	**0.588**	**14.94**	**0.049**	**1.25**	**5.500**	**139.70**	**1.822**	**46.28**	**1.232**	**31.28**	**8.87**	**39.47**	**2.41**	**0.42**	**C0588-049-5500-S**	**2.134**	**54.20**	**7.06**	**31.41**	**2.10**	**0.37**
C0588-049-5750-M	**0.588**	**14.94**	**0.049**	**1.25**	**5.750**	**146.05**	**1.902**	**48.31**	**1.284**	**32.61**	**8.87**	**39.47**	**2.31**	**0.40**	**C0588-049-5750-S**	**2.228**	**56.60**	**7.06**	**31.41**	**2.01**	**0.35**
C0588-049-6000-M	**0.588**	**14.94**	**0.049**	**1.25**	**6.000**	**152.40**	**1.982**	**50.33**	**1.336**	**33.94**	**8.87**	**39.47**	**2.21**	**0.39**	**C0588-049-6000-S**	**2.322**	**58.99**	**7.06**	**31.41**	**1.92**	**0.34**
C0588-049-6250-M	**0.588**	**14.94**	**0.049**	**1.25**	**6.250**	**158.75**	**2.061**	**52.36**	**1.388**	**35.26**	**8.87**	**39.47**	**2.12**	**0.37**	**C0588-049-6250-S**	**2.417**	**61.38**	**7.06**	**31.41**	**1.84**	**0.32**

Part Numbers with an "*" are squared and not ground. **Part Numbers in bold** represent the newly expanded Associated Spring RAYMOND compression spring offering.

MUSIC WIRE															STAINLESS STEEL					
Catalog #	Outside Diameter (OD)		Wire Diameter (d)		Free Length (L) Approx		Load Length (L_1)		Solid Height (Sh) Approx		Load (P) at L_1		Spring Rate (R)		Catalog #	Load Length (L_1)		Load (P) at L_1		Spring Rate (R)	
	in	mm	in	mm	in	mm	in	mm	in	mm	lb	N	lb/in	N/mm		in	mm	lb	N	lb/in	N/mm
C0588-049-6500-M	0.588	14.94	0.049	1.25	6.500	165.10	2.141	54.39	1.441	36.59	8.87	39.47	2.04	0.36	**C0588-049-6500-S**	2.511	63.78	7.06	31.41	1.77	0.31
C0588-049-6750-M	0.588	14.94	0.049	1.25	6.750	171.45	2.221	56.41	1.493	37.92	8.87	39.47	1.96	0.34	**C0588-049-6750-S**	2.605	66.17	7.06	31.41	1.70	0.30
C0588-049-7000-M	0.588	14.94	0.049	1.25	7.000	177.80	2.301	58.44	1.545	39.24	8.87	39.47	1.89	0.33	**C0588-049-7000-S**	2.699	68.56	7.06	31.41	1.64	0.29
C0588-049-7500-M	0.588	14.94	0.049	1.25	7.500	190.50	2.460	62.49	1.649	41.90	8.87	39.47	1.76	0.31	**C0588-049-7500-S**	2.888	73.35	7.06	31.41	1.53	0.27
C0588-049-8000-M	0.588	14.94	0.049	1.25	8.000	203.20	2.620	66.54	1.754	44.55	8.87	39.47	1.65	0.29	**C0588-049-8000-S**	3.076	78.14	7.06	31.41	1.43	0.25
C0588-049-8500-M	0.588	14.94	0.049	1.25	8.500	215.90	2.779	70.60	1.858	47.20	8.87	39.47	1.55	0.27	**C0588-049-8500-S**	3.265	82.92	7.06	31.41	1.35	0.24
C0588-049-9000-M	0.588	14.94	0.049	1.25	9.000	228.60	2.939	74.65	1.963	49.86	8.87	39.47	1.46	0.26	**C0588-049-9000-S**	3.453	87.71	7.06	31.41	1.27	0.22
C0588-049-9500-M	0.588	14.94	0.049	1.25	9.500	241.30	3.099	78.70	2.067	52.51	8.87	39.47	1.39	0.24	**C0588-049-9500-S**	3.642	92.49	7.06	31.41	1.21	0.21
C0588-051-1125-M	0.588	14.94	0.051	1.30	1.125	28.58	0.443	11.24	0.338	8.60	9.92	44.13	14.54	2.54	**C0588-051-1125-S**	0.501	12.72	7.89	35.11	12.64	2.21
C0588-051-1250-M	0.588	14.94	0.051	1.30	1.250	31.75	0.484	12.30	0.367	9.31	9.92	44.13	12.96	2.27	**C0588-051-1250-S**	0.549	13.95	7.89	35.11	11.27	1.97
C0588-051-1375-M	0.588	14.94	0.051	1.30	1.375	34.93	0.526	13.36	0.395	10.03	9.92	44.13	11.68	2.04	**C0588-051-1375-S**	0.598	15.19	7.89	35.11	10.16	1.78
C0588-051-1500-M	0.588	14.94	0.051	1.30	1.500	38.10	0.568	14.42	0.423	10.75	9.92	44.13	10.64	1.86	**C0588-051-1500-S**	0.647	16.43	7.89	35.11	9.25	1.62
C0588-051-1625-M	0.588	14.94	0.051	1.30	1.625	41.28	0.609	15.47	0.451	11.47	9.92	44.13	9.77	1.71	**C0588-051-1625-S**	0.696	17.67	7.89	35.11	8.49	1.49
C0588-051-1750-M	0.588	14.94	0.051	1.30	1.750	44.45	0.651	16.53	0.480	12.19	9.92	44.13	9.03	1.58	**C0588-051-1750-S**	0.744	18.90	7.89	35.11	7.85	1.37
C0588-051-1875-M	0.588	14.94	0.051	1.30	1.875	47.63	0.692	17.59	0.508	12.90	9.92	44.13	8.39	1.47	**C0588-051-1875-S**	0.793	20.14	7.89	35.11	7.30	1.28
C0588-051-2000-M	0.588	14.94	0.051	1.30	2.000	50.80	0.734	18.65	0.536	13.62	9.92	44.13	7.84	1.37	**C0588-051-2000-S**	0.842	21.38	7.89	35.11	6.81	1.19
C0588-051-2125-M	0.588	14.94	0.051	1.30	2.125	53.98	0.776	19.70	0.565	14.34	9.92	44.13	7.35	1.29	**C0588-051-2125-S**	0.890	22.62	7.89	35.11	6.39	1.12
C0588-051-2250-M	0.588	14.94	0.051	1.30	2.250	57.15	0.817	20.76	0.593	15.06	9.92	44.13	6.92	1.21	**C0588-051-2250-S**	0.939	23.85	7.89	35.11	6.02	1.05
C0588-051-2375-M	0.588	14.94	0.051	1.30	2.375	60.33	0.859	21.82	0.621	15.77	9.92	44.13	6.54	1.15	**C0588-051-2375-S**	0.988	25.09	7.89	35.11	5.69	1.00
C0588-051-2500-M	0.588	14.94	0.051	1.30	2.500	63.50	0.901	22.88	0.649	16.49	9.92	44.13	6.20	1.09	**C0588-051-2500-S**	1.037	26.33	7.89	35.11	5.39	0.94
C0588-051-2625-M	0.588	14.94	0.051	1.30	2.625	66.68	0.942	23.93	0.678	17.21	9.92	44.13	5.90	1.03	**C0588-051-2625-S**	1.085	27.56	7.89	35.11	5.13	0.90
C0588-051-2750-M	0.588	14.94	0.051	1.30	2.750	69.85	0.984	24.99	0.706	17.93	9.92	44.13	5.62	0.98	**C0588-051-2750-S**	1.134	28.80	7.89	35.11	4.88	0.85
C0588-051-2875-M	0.588	14.94	0.051	1.30	2.875	73.03	1.026	26.05	0.734	18.65	9.92	44.13	5.36	0.94	**C0588-051-2875-S**	1.183	30.04	7.89	35.11	4.66	0.82
C0588-051-3000-M	0.588	14.94	0.051	1.30	3.000	76.20	1.067	27.11	0.762	19.36	9.92	44.13	5.13	0.90	**C0588-051-3000-S**	1.231	31.28	7.89	35.11	4.46	0.78
C0588-051-3250-M	0.588	14.94	0.051	1.30	3.250	82.55	1.150	29.22	0.819	20.80	9.92	44.13	4.73	0.83	**C0588-051-3250-S**	1.329	33.75	7.89	35.11	4.11	0.72
C0588-051-3500-M	0.588	14.94	0.051	1.30	3.500	88.90	1.234	31.34	0.875	22.24	9.92	44.13	4.38	0.77	**C0588-051-3500-S**	1.426	36.23	7.89	35.11	3.81	0.67
C0588-051-3750-M	0.588	14.94	0.051	1.30	3.750	95.25	1.317	33.45	0.932	23.67	9.92	44.13	4.08	0.71	**C0588-051-3750-S**	1.524	38.70	7.89	35.11	3.55	0.62
C0588-051-4000-M	0.588	14.94	0.051	1.30	4.000	101.60	1.400	35.57	0.988	25.11	9.92	44.13	3.82	0.67	**C0588-051-4000-S**	1.621	41.18	7.89	35.11	3.32	0.58
C0588-051-4250-M	0.588	14.94	0.051	1.30	4.250	107.95	1.483	37.68	1.045	26.54	9.92	44.13	3.59	0.63	**C0588-051-4250-S**	1.719	43.65	7.89	35.11	3.12	0.55
C0588-051-4500-M	0.588	14.94	0.051	1.30	4.500	114.30	1.567	39.79	1.102	27.98	9.92	44.13	3.38	0.59	**C0588-051-4500-S**	1.816	46.12	7.89	35.11	2.94	0.51
C0588-051-4750-M	0.588	14.94	0.051	1.30	4.750	120.65	1.650	41.91	1.158	29.41	9.92	44.13	3.20	0.56	**C0588-051-4750-S**	1.913	48.60	7.89	35.11	2.78	0.49
C0588-051-5000-M	0.588	14.94	0.051	1.30	5.000	127.00	1.733	44.02	1.215	30.85	9.92	44.13	3.04	0.53	**C0588-051-5000-S**	2.011	51.07	7.89	35.11	2.64	0.46
C0588-051-5250-M	0.588	14.94	0.051	1.30	5.250	133.35	1.817	46.14	1.271	32.29	9.92	44.13	2.89	0.51	**C0588-051-5250-S**	2.108	53.55	7.89	35.11	2.51	0.44
C0588-051-5500-M	0.588	14.94	0.051	1.30	5.500	139.70	1.900	48.25	1.328	33.72	9.92	44.13	2.76	0.48	**C0588-051-5500-S**	2.206	56.02	7.89	35.11	2.40	0.42
C0588-051-5750-M	0.588	14.94	0.051	1.30	5.750	146.05	1.983	50.37	1.384	35.16	9.92	44.13	2.63	0.46	**C0588-051-5750-S**	2.303	58.50	7.89	35.11	2.29	0.40
C0588-051-6000-M	0.588	14.94	0.051	1.30	6.000	152.40	2.066	52.48	1.441	36.59	9.92	44.13	2.52	0.44	**C0588-051-6000-S**	2.400	60.97	7.89	35.11	2.19	0.38
C0588-051-6250-M	0.588	14.94	0.051	1.30	6.250	158.75	2.150	54.60	1.497	38.03	9.92	44.13	2.42	0.42	**C0588-051-6250-S**	2.498	63.45	7.89	35.11	2.10	0.37
C0588-051-6500-M	0.588	14.94	0.051	1.30	6.500	165.10	2.233	56.71	1.554	39.47	9.92	44.13	2.33	0.41	**C0588-051-6500-S**	2.595	65.92	7.89	35.11	2.02	0.35
C0588-051-6750-M	0.588	14.94	0.051	1.30	6.750	171.45	2.316	58.83	1.610	40.90	9.92	44.13	2.24	0.39	**C0588-051-6750-S**	2.693	68.40	7.89	35.11	1.95	0.34
C0588-051-7000-M	0.588	14.94	0.051	1.30	7.000	177.80	2.399	60.94	1.667	42.34	9.92	44.13	2.16	0.38	**C0588-051-7000-S**	2.790	70.87	7.89	35.11	1.88	0.33
C0588-051-7500-M	0.588	14.94	0.051	1.30	7.500	190.50	2.566	65.17	1.780	45.21	9.92	44.13	2.01	0.35	**C0588-051-7500-S**	2.985	75.82	7.89	35.11	1.75	0.31
C0588-051-8000-M	0.588	14.94	0.051	1.30	8.000	203.20	2.732	69.40	1.893	48.08	9.92	44.13	1.88	0.33	**C0588-051-8000-S**	3.180	80.77	7.89	35.11	1.64	0.29
C0588-051-8500-M	0.588	14.94	0.051	1.30	8.500	215.90	2.899	73.63	2.006	50.95	9.92	44.13	1.77	0.31	**C0588-051-8500-S**	3.375	85.72	7.89	35.11	1.54	0.27
C0588-051-9000-M	0.588	14.94	0.051	1.30	9.000	228.60	3.065	77.86	2.119	53.82	9.92	44.13	1.67	0.29	**C0588-051-9000-S**	3.570	90.67	7.89	35.11	1.45	0.25
C0588-051-9500-M	0.588	14.94	0.051	1.30	9.500	241.30	3.232	82.09	2.232	56.70	9.92	44.13	1.58	0.28	**C0588-051-9500-S**	3.764	95.62	7.89	35.11	1.38	0.24
C0588-055-1000-M	0.588	14.94	0.055	1.40	1.000	25.40	0.432	10.97	0.348	8.85	12.24	54.45	21.55	3.77	**C0588-055-1000-S**	0.481	12.21	9.73	43.30	18.74	3.28
C0588-055-1125-M	0.588	14.94	0.055	1.40	1.125	28.58	0.477	12.12	0.381	9.68	12.24	54.45	18.90	3.31	**C0588-055-1125-S**	0.533	13.53	9.73	43.30	16.43	2.88
C0588-055-1250-M	0.588	14.94	0.055	1.40	1.250	31.75	0.522	13.27	0.414	10.51	12.24	54.45	16.82	2.94	**C0588-055-1250-S**	0.585	14.85	9.73	43.30	14.63	2.56
C0588-055-1375-M	0.588	14.94	0.055	1.40	1.375	34.93	0.568	14.42	0.446	11.34	12.24	54.45	15.16	2.65	**C0588-055-1375-S**	0.637	16.17	9.73	43.30	13.18	2.31
C0588-055-1500-M	0.588	14.94	0.055	1.40	1.500	38.10	0.613	15.57	0.479	12.17	12.24	54.45	13.80	2.41	**C0588-055-1500-S**	0.689	17.49	9.73	43.30	12.00	2.10
C0588-055-1625-M	0.588	14.94	0.055	1.40	1.625	41.28	0.658	16.71	0.512	13.00	12.24	54.45	12.66	2.22	**C0588-055-1625-S**	0.741	18.82	9.73	43.30	11.01	1.93
C0588-055-1750-M	0.588	14.94	0.055	1.40	1.750	44.45	0.703	17.86	0.544	13.83	12.24	54.45	11.70	2.05	**C0588-055-1750-S**	0.793	20.14	9.73	43.30	10.17	1.78
C0588-055-1875-M	0.588	14.94	0.055	1.40	1.875	47.63	0.748	19.01	0.577	14.66	12.24	54.45	10.87	1.90	**C0588-055-1875-S**	0.845	21.46	9.73	43.30	9.45	1.65
C0588-055-2000-M	0.588	14.94	0.055	1.40	2.000	50.80	0.794	20.16	0.610	15.49	12.24	54.45	10.15	1.78	**C0588-055-2000-S**	0.897	22.78	9.73	43.30	8.82	1.54
C0588-055-2125-M	0.588	14.94	0.055	1.40	2.125	53.98	0.839	21.31	0.643	16.32	12.24	54.45	9.52	1.67	**C0588-055-2125-S**	0.949	24.10	9.73	43.30	8.28	1.45
C0588-055-2250-M	0.588	14.94	0.055	1.40	2.250	57.15	0.884	22.46	0.675	17.15	12.24	54.45	8.96	1.57	**C0588-055-2250-S**	1.001	25.43	9.73	43.30	7.79	1.36
C0588-055-2375-M	0.588	14.94	0.055	1.40	2.375	60.33	0.929	23.61	0.708	17.98	12.24	54.45	8.47	1.48	**C0588-055-2375-S**	1.053	26.75	9.73	43.30	7.36	1.29
C0588-055-2500-M	0.588	14.94	0.055	1.40	2.500	63.50	0.975	24.75	0.741	18.81	12.24	54.45	8.03	1.40	**C0588-055-2500-S**	1.105	28.07	9.73	43.30	6.98	1.22
C0588-055-2625-M	0.588	14.94	0.055	1.40	2.625	66.68	1.020	25.90	0.773	19.64	12.24	54.45	7.63	1.33	**C0588-055-2625-S**	1.157	29.39	9.73	43.30	6.63	1.16
C0588-055-2750-M	0.588	14.94	0.055	1.40	2.750	69.85	1.065	27.05	0.806	20.47	12.24	54.45	7.27	1.27	**C0588-055-2750-S**	1.209	30.71	9.73	43.30	6.32	1.11
C0588-055-2875-M	0.588	14.94	0.055	1.40	2.875	73.03	1.110	28.20	0.839	21.30	12.24	54.45	6.94	1.21	**C0588-055-2875-S**	1.261	32.03	9.73	43.30	6.03	1.06
C0588-055-3000-M	0.588	14.94	0.055	1.40	3.000	76.20	1.155	29.35	0.871	22.13	12.24	54.45	6.64	1.16	**C0588-055-3000-S**	1.313	33.36	9.73	43.30	5.77	1.01
C0588-055-3250-M	0.588	14.94	0.055	1.40	3.250	82.55	1.246	31.65	0.937	23.80	12.24	54.45	6.11	1.07	**C0588-055-3250-S**	1.417	36.00	9.73	43.30	5.31	0.93
C0588-055-3500-M	0.588	14.94	0.055	1.40	3.500	88.90	1.336	33.94	1.002	25.46	12.24	54.45	5.66	0.99	**C0588-055-3500-S**	1.521	38.64	9.73	43.30	4.92	0.86

FOR INFORMATION ON ALTERNATIVE FINISHES, SEE PAGE 311

Part Numbers with an "*" are squared and not ground. **Part Numbers in bold** represent the newly expanded Associated Spring RAYMOND compression spring offering.

MUSIC WIRE															STAINLESS STEEL					
Catalog #	Outside Diameter (OD)		Wire Diameter (d)		Free Length (L) Approx		Load Length (L_1)		Solid Height (Sh) Approx		Load (P) at L_1		Spring Rate (R)		Catalog #	Load Length (L_1)		Load (P) at L_1		Spring Rate (R)	
	in	mm	in	mm	in	mm	in	mm	in	mm	lb	N	lb/in	N/mm		in	mm	lb	N	lb/in	N/mm
C0588-055-3750-M	0.588	14.94	0.055	1.40	3.750	95.25	1.427	36.24	1.068	27.12	12.24	54.45	5.27	0.92	**C0588-055-3750-S**	1.626	41.29	9.73	43.30	4.58	0.80
C0588-055-4000-M	0.588	14.94	0.055	1.40	4.000	101.60	1.517	38.54	1.133	28.78	12.24	54.45	4.93	0.86	**C0588-055-4000-S**	1.730	43.93	9.73	43.30	4.29	0.75
C0588-055-4250-M	0.588	14.94	0.055	1.40	4.250	107.95	1.608	40.83	1.198	30.44	12.24	54.45	4.63	0.81	**C0588-055-4250-S**	1.834	46.58	9.73	43.30	4.03	0.70
C0588-055-4500-M	0.588	14.94	0.055	1.40	4.500	114.30	1.698	43.13	1.264	32.10	12.24	54.45	4.37	0.76	**C0588-055-4500-S**	1.938	49.22	9.73	43.30	3.80	0.66
C0588-055-4750-M	0.588	14.94	0.055	1.40	4.750	120.65	1.789	45.43	1.329	33.76	12.24	54.45	4.13	0.72	**C0588-055-4750-S**	2.042	51.86	9.73	43.30	3.59	0.63
C0588-055-5000-M	0.588	14.94	0.055	1.40	5.000	127.00	1.879	47.73	1.395	35.42	12.24	54.45	3.92	0.69	**C0588-055-5000-S**	2.146	54.51	9.73	43.30	3.41	0.60
C0588-055-5250-M	0.588	14.94	0.055	1.40	5.250	133.35	1.969	50.02	1.460	37.08	12.24	54.45	3.73	0.65	**C0588-055-5250-S**	2.250	57.15	9.73	43.30	3.25	0.57
C0588-055-5500-M	0.588	14.94	0.055	1.40	5.500	139.70	2.060	52.32	1.525	38.74	12.24	54.45	3.56	0.62	**C0588-055-5500-S**	2.354	59.79	9.73	43.30	3.09	0.54
C0588-055-5750-M	0.588	14.94	0.055	1.40	5.750	146.05	2.150	54.62	1.591	40.41	12.24	54.45	3.40	0.60	**C0588-055-5750-S**	2.458	62.44	9.73	43.30	2.96	0.52
C0588-055-6000-M	0.588	14.94	0.055	1.40	6.000	152.40	2.241	56.91	1.656	42.07	12.24	54.45	3.26	0.57	**C0588-055-6000-S**	2.562	65.08	9.73	43.30	2.83	0.50
C0588-055-6250-M	0.588	14.94	0.055	1.40	6.250	158.75	2.331	59.21	1.722	43.73	12.24	54.45	3.12	0.55	**C0588-055-6250-S**	2.666	67.73	9.73	43.30	2.72	0.48
C0588-055-6500-M	0.588	14.94	0.055	1.40	6.500	165.10	2.422	61.51	1.787	45.39	12.24	54.45	3.00	0.53	**C0588-055-6500-S**	2.770	70.37	9.73	43.30	2.61	0.46
C0588-055-6750-M	0.588	14.94	0.055	1.40	6.750	171.45	2.512	63.81	1.852	47.05	12.24	54.45	2.89	0.51	**C0588-055-6750-S**	2.875	73.01	9.73	43.30	2.51	0.44
C0588-055-7000-M	0.588	14.94	0.055	1.40	7.000	177.80	2.602	66.10	1.918	48.71	12.24	54.45	2.78	0.49	**C0588-055-7000-S**	2.979	75.66	9.73	43.30	2.42	0.42
C0588-055-7500-M	0.588	14.94	0.055	1.40	7.500	190.50	2.783	70.70	2.049	52.03	12.24	54.45	2.60	0.45	**C0588-055-7500-S**	3.187	80.95	9.73	43.30	2.26	0.39
C0588-055-8000-M	0.588	14.94	0.055	1.40	8.000	203.20	2.964	75.29	2.179	55.36	12.24	54.45	2.43	0.43	**C0588-055-8000-S**	3.395	86.23	9.73	43.30	2.11	0.37
C0588-055-8500-M	0.588	14.94	0.055	1.40	8.500	215.90	3.145	79.89	2.310	58.68	12.24	54.45	2.29	0.40	**C0588-055-8500-S**	3.603	91.52	9.73	43.30	1.99	0.35
C0588-055-9000-M	0.588	14.94	0.055	1.40	9.000	228.60	3.326	84.48	2.441	62.00	12.24	54.45	2.16	0.38	**C0588-055-9000-S**	3.811	96.81	9.73	43.30	1.88	0.33
C0588-055-9500-M	0.588	14.94	0.055	1.40	9.500	241.30	3.507	89.07	2.572	65.32	12.24	54.45	2.04	0.36	**C0588-055-9500-S**	4.020	102.10	9.73	43.30	1.78	0.31
C0588-059-1000-M	0.588	14.94	0.059	1.50	1.000	25.40	0.463	11.77	0.387	9.83	14.88	66.18	27.72	4.85	**C0588-059-1000-S**	0.510	12.94	11.82	52.57	24.10	4.22
C0588-059-1125-M	0.588	14.94	0.059	1.50	1.125	28.58	0.512	13.01	0.424	10.77	14.88	66.18	24.28	4.25	**C0588-059-1125-S**	0.565	14.35	11.82	52.57	21.11	3.69
C0588-059-1250-M	0.588	14.94	0.059	1.50	1.250	31.75	0.561	14.25	0.461	11.72	14.88	66.18	21.60	3.78	**C0588-059-1250-S**	0.621	15.76	11.82	52.57	18.78	3.29
C0588-059-1375-M	0.588	14.94	0.059	1.50	1.375	34.93	0.610	15.49	0.499	12.67	14.88	66.18	19.45	3.40	**C0588-059-1375-S**	0.676	17.17	11.82	52.57	16.91	2.96
C0588-059-1500-M	0.588	14.94	0.059	1.50	1.500	38.10	0.659	16.74	0.536	13.61	14.88	66.18	17.69	3.10	**C0588-059-1500-S**	0.732	18.58	11.82	52.57	15.38	2.69
C0588-059-1625-M	0.588	14.94	0.059	1.50	1.625	41.28	0.708	17.98	0.573	14.56	14.88	66.18	16.22	2.84	**C0588-059-1625-S**	0.787	19.99	11.82	52.57	14.11	2.47
C0588-059-1750-M	0.588	14.94	0.059	1.50	1.750	44.45	0.757	19.22	0.611	15.51	14.88	66.18	14.98	2.62	**C0588-059-1750-S**	0.843	21.40	11.82	52.57	13.03	2.28
C0588-059-1875-M	0.588	14.94	0.059	1.50	1.875	47.63	0.806	20.46	0.648	16.45	14.88	66.18	13.91	2.43	**C0588-059-1875-S**	0.898	22.81	11.82	52.57	12.10	2.12
C0588-059-2000-M	0.588	14.94	0.059	1.50	2.000	50.80	0.855	21.71	0.685	17.40	14.88	66.18	12.99	2.27	**C0588-059-2000-S**	0.954	24.22	11.82	52.57	11.30	1.98
C0588-059-2125-M	0.588	14.94	0.059	1.50	2.125	53.98	0.904	22.95	0.722	18.35	14.88	66.18	12.18	2.13	**C0588-059-2125-S**	1.009	25.63	11.82	52.57	10.59	1.85
C0588-059-2250-M	0.588	14.94	0.059	1.50	2.250	57.15	0.952	24.19	0.760	19.29	14.88	66.18	11.47	2.01	**C0588-059-2250-S**	1.065	27.04	11.82	52.57	9.97	1.74
C0588-059-2375-M	0.588	14.94	0.059	1.50	2.375	60.33	1.001	25.43	0.797	20.24	14.88	66.18	10.83	1.90	**C0588-059-2375-S**	1.120	28.45	11.82	52.57	9.42	1.65
C0588-059-2500-M	0.588	14.94	0.059	1.50	2.500	63.50	1.050	26.68	0.834	21.19	14.88	66.18	10.26	1.80	**C0588-059-2500-S**	1.176	29.86	11.82	52.57	8.92	1.56
C0588-059-2625-M	0.588	14.94	0.059	1.50	2.625	66.68	1.099	27.92	0.871	22.14	14.88	66.18	9.75	1.71	**C0588-059-2625-S**	1.231	31.27	11.82	52.57	8.48	1.48
C0588-059-2750-M	0.588	14.94	0.059	1.50	2.750	69.85	1.148	29.16	0.909	23.08	14.88	66.18	9.29	1.63	**C0588-059-2750-S**	1.287	32.68	11.82	52.57	8.08	1.41
C0588-059-2875-M	0.588	14.94	0.059	1.50	2.875	73.03	1.197	30.41	0.946	24.03	14.88	66.18	8.87	1.55	**C0588-059-2875-S**	1.342	34.09	11.82	52.57	7.71	1.35
C0588-059-3000-M	0.588	14.94	0.059	1.50	3.000	76.20	1.246	31.65	0.983	24.98	14.88	66.18	8.48	1.48	**C0588-059-3000-S**	1.398	35.50	11.82	52.57	7.38	1.29
C0588-059-3250-M	0.588	14.94	0.059	1.50	3.250	82.55	1.344	34.13	1.058	26.87	14.88	66.18	7.81	1.37	**C0588-059-3250-S**	1.509	38.32	11.82	52.57	6.79	1.19
C0588-059-3500-M	0.588	14.94	0.059	1.50	3.500	88.90	1.442	36.62	1.132	28.76	14.88	66.18	7.23	1.26	**C0588-059-3500-S**	1.620	41.14	11.82	52.57	6.29	1.10
C0588-059-3750-M	0.588	14.94	0.059	1.50	3.750	95.25	1.540	39.10	1.207	30.66	14.88	66.18	6.73	1.18	**C0588-059-3750-S**	1.731	43.96	11.82	52.57	5.85	1.02
C0588-059-4000-M	0.588	14.94	0.059	1.50	4.000	101.60	1.637	41.59	1.281	32.55	14.88	66.18	6.30	1.10	**C0588-059-4000-S**	1.842	46.78	11.82	52.57	5.48	0.96
C0588-059-4250-M	0.588	14.94	0.059	1.50	4.250	107.95	1.735	44.07	1.356	34.44	14.88	66.18	5.92	1.04	**C0588-059-4250-S**	1.953	49.60	11.82	52.57	5.14	0.90
C0588-059-4500-M	0.588	14.94	0.059	1.50	4.500	114.30	1.833	46.56	1.431	36.34	14.88	66.18	5.58	0.98	**C0588-059-4500-S**	2.064	52.42	11.82	52.57	4.85	0.85
C0588-059-4750-M	0.588	14.94	0.059	1.50	4.750	120.65	1.931	49.05	1.505	38.23	14.88	66.18	5.28	0.92	**C0588-059-4750-S**	2.175	55.24	11.82	52.57	4.59	0.80
C0588-059-5000-M	0.588	14.94	0.059	1.50	5.000	127.00	2.029	51.53	1.580	40.12	14.88	66.18	5.01	0.88	**C0588-059-5000-S**	2.286	58.06	11.82	52.57	4.35	0.76
C0588-059-5250-M	0.588	14.94	0.059	1.50	5.250	133.35	2.127	54.02	1.654	42.02	14.88	66.18	4.76	0.83	**C0588-059-5250-S**	2.397	60.87	11.82	52.57	4.14	0.72
C0588-059-5500-M	0.588	14.94	0.059	1.50	5.500	139.70	2.224	56.50	1.729	43.91	14.88	66.18	4.54	0.79	**C0588-059-5500-S**	2.508	63.69	11.82	52.57	3.95	0.69
C0588-059-5750-M	0.588	14.94	0.059	1.50	5.750	146.05	2.322	58.99	1.803	45.80	14.88	66.18	4.34	0.76	**C0588-059-5750-S**	2.619	66.51	11.82	52.57	3.77	0.66
C0588-059-6000-M	0.588	14.94	0.059	1.50	6.000	152.40	2.420	61.47	1.878	47.70	14.88	66.18	4.16	0.73	**C0588-059-6000-S**	2.730	69.33	11.82	52.57	3.61	0.63
C0588-059-6250-M	0.588	14.94	0.059	1.50	6.250	158.75	2.518	63.96	1.952	49.59	14.88	66.18	3.99	0.70	**C0588-059-6250-S**	2.841	72.15	11.82	52.57	3.47	0.61
C0588-059-6500-M	0.588	14.94	0.059	1.50	6.500	165.10	2.616	66.44	2.027	51.48	14.88	66.18	3.83	0.67	**C0588-059-6500-S**	2.952	74.97	11.82	52.57	3.33	0.58
C0588-059-6750-M	0.588	14.94	0.059	1.50	6.750	171.45	2.714	68.93	2.101	53.38	14.88	66.18	3.69	0.65	**C0588-059-6750-S**	3.063	77.79	11.82	52.57	3.21	0.56
C0588-059-7000-M	0.588	14.94	0.059	1.50	7.000	177.80	2.812	71.41	2.176	55.27	14.88	66.18	3.55	0.62	**C0588-059-7000-S**	3.174	80.61	11.82	52.57	3.09	0.54
C0588-059-7500-M	0.588	14.94	0.059	1.50	7.500	190.50	3.007	76.38	2.325	59.06	14.88	66.18	3.31	0.58	**C0588-059-7500-S**	3.396	86.25	11.82	52.57	2.88	0.50
C0588-059-8000-M	0.588	14.94	0.059	1.50	8.000	203.20	3.203	81.35	2.474	62.85	14.88	66.18	3.10	0.54	**C0588-059-8000-S**	3.618	91.89	11.82	52.57	2.70	0.47
C0588-059-8500-M	0.588	14.94	0.059	1.50	8.500	215.90	3.399	86.33	2.623	66.63	14.88	66.18	2.92	0.51	**C0588-059-8500-S**	3.840	97.53	11.82	52.57	2.54	0.44
C0588-059-9000-M	0.588	14.94	0.059	1.50	9.000	228.60	3.594	91.30	2.772	70.42	14.88	66.18	2.75	0.48	**C0588-059-9000-S**	4.062	103.17	11.82	52.57	2.39	0.42
C0588-059-9500-M	0.588	14.94	0.059	1.50	9.500	241.30	3.790	96.27	2.922	74.21	14.88	66.18	2.61	0.46	**C0588-059-9500-S**	4.284	108.80	11.82	52.57	2.27	0.40
C0588-063-0938-M	0.588	14.94	0.063	1.60	0.938	23.81	0.468	11.89	0.405	10.28	17.84	79.38	38.02	6.65	**C0588-063-0938-S**	0.509	12.94	14.16	62.97	33.06	5.79
C0588-063-1000-M	0.588	14.94	0.063	1.60	1.000	25.40	0.494	12.56	0.426	10.81	17.84	79.38	35.30	6.18	**C0588-063-1000-S**	0.539	13.69	14.16	62.97	30.70	5.37
C0588-063-1125-M	0.588	14.94	0.063	1.60	1.125	28.58	0.547	13.90	0.467	11.87	17.84	79.38	30.88	5.40	**C0588-063-1125-S**	0.598	15.18	14.16	62.97	26.86	4.70
C0588-063-1250-M	0.588	14.94	0.063	1.60	1.250	31.75	0.600	15.24	0.509	12.94	17.84	79.38	27.45	4.80	**C0588-063-1250-S**	0.657	16.68	14.16	62.97	23.87	4.18
C0588-063-1375-M	0.588	14.94	0.063	1.60	1.375	34.93	0.653	16.58	0.551	14.00	17.84	79.38	24.70	4.32	**C0588-063-1375-S**	0.716	18.18	14.16	62.97	21.48	3.76
C0588-063-1500-M	0.588	14.94	0.063	1.60	1.500	38.10	0.705	17.91	0.593	15.07	17.84	79.38	22.46	3.93	**C0588-063-1500-S**	0.775	19.68	14.16	62.97	19.53	3.42
C0588-063-1625-M	0.588	14.94	0.063	1.60	1.625	41.28	0.758	19.25	0.635	16.14	17.84	79.38	20.58	3.60	**C0588-063-1625-S**	0.834	21.18	14.16	62.97	17.90	3.13

Part Numbers with an "*" are squared and not ground. **Part Numbers in bold** represent the newly expanded Associated Spring RAYMOND compression spring offering.

MUSIC WIRE															STAINLESS STEEL					
Catalog #	Outside Diameter (OD)		Wire Diameter (d)		Free Length (L) Approx		Load Length (L_1)		Solid Height (Sh) Approx		Load (P) at L_1		Spring Rate (R)		Catalog #	Load Length (L_1)		Load (P) at L_1		Spring Rate (R)	
	in	mm	in	mm	in	mm	in	mm	in	mm	lb	N	lb/in	N/mm		in	mm	lb	N	lb/in	N/mm
C0588-063-1750-M	0.588	14.94	0.063	1.60	1.750	44.45	0.811	20.59	0.677	17.20	17.84	79.38	19.00	3.32	**C0588-063-1750-S**	0.893	22.68	14.16	62.97	16.52	2.89
C0588-063-1875-M	0.588	14.94	0.063	1.60	1.875	47.63	0.863	21.93	0.719	18.27	17.84	79.38	17.64	3.09	**C0588-063-1875-S**	0.952	24.18	14.16	62.97	15.34	2.68
C0588-063-2000-M	0.588	14.94	0.063	1.60	2.000	50.80	0.916	23.27	0.761	19.33	17.84	79.38	16.46	2.88	**C0588-063-2000-S**	1.011	25.68	14.16	62.97	14.32	2.51
C0588-063-2125-M	0.588	14.94	0.063	1.60	2.125	53.98	0.969	24.61	0.803	20.40	17.84	79.38	15.43	2.70	**C0588-063-2125-S**	1.070	27.18	14.16	62.97	13.42	2.35
C0588-063-2250-M	0.588	14.94	0.063	1.60	2.250	57.15	1.022	25.95	0.845	21.46	17.84	79.38	14.53	2.54	**C0588-063-2250-S**	1.129	28.68	14.16	62.97	12.63	2.21
C0588-063-2375-M	0.588	14.94	0.063	1.60	2.375	60.33	1.074	27.29	0.887	22.53	17.84	79.38	13.72	2.40	**C0588-063-2375-S**	1.188	30.18	14.16	62.97	11.93	2.09
C0588-063-2500-M	0.588	14.94	0.063	1.60	2.500	63.50	1.127	28.62	0.929	23.59	17.84	79.38	13.00	2.27	**C0588-063-2500-S**	1.247	31.68	14.16	62.97	11.30	1.98
C0588-063-2625-M	0.588	14.94	0.063	1.60	2.625	66.68	1.180	29.96	0.971	24.66	17.84	79.38	12.35	2.16	**C0588-063-2625-S**	1.306	33.18	14.16	62.97	10.74	1.88
C0588-063-2750-M	0.588	14.94	0.063	1.60	2.750	69.85	1.232	31.30	1.013	25.72	17.84	79.38	11.76	2.06	**C0588-063-2750-S**	1.365	34.68	14.16	62.97	10.22	1.79
C0588-063-2875-M	0.588	14.94	0.063	1.60	2.875	73.03	1.285	32.64	1.055	26.79	17.84	79.38	11.22	1.96	**C0588-063-2875-S**	1.424	36.18	14.16	62.97	9.76	1.71
C0588-063-3000-M	0.588	14.94	0.063	1.60	3.000	76.20	1.338	33.98	1.097	27.85	17.84	79.38	10.74	1.88	**C0588-063-3000-S**	1.483	37.68	14.16	62.97	9.34	1.63
C0588-063-3250-M	0.588	14.94	0.063	1.60	3.250	82.55	1.443	36.66	1.180	29.98	17.84	79.38	9.88	1.73	**C0588-063-3250-S**	1.601	40.68	14.16	62.97	8.59	1.50
C0588-063-3500-M	0.588	14.94	0.063	1.60	3.500	88.90	1.549	39.33	1.264	32.12	17.84	79.38	9.14	1.60	**C0588-063-3500-S**	1.720	43.68	14.16	62.97	7.95	1.39
C0588-063-3750-M	0.588	14.94	0.063	1.60	3.750	95.25	1.654	42.01	1.348	34.25	17.84	79.38	8.51	1.49	**C0588-063-3750-S**	1.838	46.68	14.16	62.97	7.40	1.30
C0588-063-4000-M	0.588	14.94	0.063	1.60	4.000	101.60	1.759	44.69	1.432	36.38	17.84	79.38	7.96	1.39	**C0588-063-4000-S**	1.956	49.67	14.16	62.97	6.93	1.21
C0588-063-4250-M	0.588	14.94	0.063	1.60	4.250	107.95	1.865	47.36	1.516	38.51	17.84	79.38	7.48	1.31	**C0588-063-4250-S**	2.074	52.67	14.16	62.97	6.51	1.14
C0588-063-4500-M	0.588	14.94	0.063	1.60	4.500	114.30	1.970	50.04	1.600	40.64	17.84	79.38	7.05	1.23	**C0588-063-4500-S**	2.192	55.67	14.16	62.97	6.13	1.07
C0588-063-4750-M	0.588	14.94	0.063	1.60	4.750	120.65	2.076	52.72	1.684	42.77	17.84	79.38	6.67	1.17	**C0588-063-4750-S**	2.310	58.67	14.16	62.97	5.80	1.02
C0588-063-5000-M	0.588	14.94	0.063	1.60	5.000	127.00	2.181	55.40	1.768	44.90	17.84	79.38	6.33	1.11	**C0588-063-5000-S**	2.428	61.67	14.16	62.97	5.50	0.96
C0588-063-5250-M	0.588	14.94	0.063	1.60	5.250	133.35	2.286	58.07	1.852	47.03	17.84	79.38	6.02	1.05	**C0588-063-5250-S**	2.546	64.67	14.16	62.97	5.24	0.92
C0588-063-5500-M	0.588	14.94	0.063	1.60	5.500	139.70	2.392	60.75	1.935	49.16	17.84	79.38	5.74	1.00	**C0588-063-5500-S**	2.664	67.67	14.16	62.97	4.99	0.87
C0588-063-5750-M	0.588	14.94	0.063	1.60	5.750	146.05	2.497	63.43	2.019	51.29	17.84	79.38	5.49	0.96	**C0588-063-5750-S**	2.782	70.67	14.16	62.97	4.77	0.83
C0588-063-6000-M	0.588	14.94	0.063	1.60	6.000	152.40	2.603	66.11	2.103	53.42	17.84	79.38	5.25	0.92	**C0588-063-6000-S**	2.900	73.67	14.16	62.97	4.57	0.80
C0588-063-6250-M	0.588	14.94	0.063	1.60	6.250	158.75	2.708	68.78	2.187	55.55	17.84	79.38	5.04	0.88	**C0588-063-6250-S**	3.018	76.67	14.16	62.97	4.38	0.77
C0588-063-6500-M	0.588	14.94	0.063	1.60	6.500	165.10	2.813	71.46	2.271	57.68	17.84	79.38	4.84	0.85	**C0588-063-6500-S**	3.136	79.67	14.16	62.97	4.21	0.74
C0588-063-6750-M	0.588	14.94	0.063	1.60	6.750	171.45	2.919	74.14	2.355	59.81	17.84	79.38	4.66	0.82	**C0588-063-6750-S**	3.255	82.67	14.16	62.97	4.05	0.71
C0588-063-7000-M	0.588	14.94	0.063	1.60	7.000	177.80	3.024	76.81	2.439	61.94	17.84	79.38	4.49	0.79	**C0588-063-7000-S**	3.373	85.66	14.16	62.97	3.90	0.68
C0588-063-7500-M	0.588	14.94	0.063	1.60	7.500	190.50	3.235	82.17	2.606	66.20	17.84	79.38	4.18	0.73	**C0588-063-7500-S**	3.609	91.66	14.16	62.97	3.64	0.64
C0588-063-8000-M	0.588	14.94	0.063	1.60	8.000	203.20	3.446	87.52	2.774	70.47	17.84	79.38	3.92	0.69	**C0588-063-8000-S**	3.845	97.66	14.16	62.97	3.41	0.60
C0588-063-8500-M	0.588	14.94	0.063	1.60	8.500	215.90	3.657	92.88	2.942	74.73	17.84	79.38	3.68	0.64	**C0588-063-8500-S**	4.081	103.66	14.16	62.97	3.20	0.56
C0588-063-9000-M	0.588	14.94	0.063	1.60	9.000	228.60	3.867	98.23	3.110	78.99	17.84	79.38	3.48	0.61	**C0588-063-9000-S**	4.317	109.66	14.16	62.97	3.02	0.53
C0588-063-9500-M	0.588	14.94	0.063	1.60	9.500	241.30	4.078	103.59	3.278	83.25	17.84	79.38	3.29	0.58	**C0588-063-9500-S**	4.553	115.66	14.16	62.97	2.86	0.50
C0588-068-0938-M	0.588	14.94	0.068	1.73	0.938	23.81	0.504	12.81	0.449	11.42	22.04	98.04	50.90	8.91	**C0588-068-0938-S**	0.543	13.80	17.45	77.63	44.26	7.74
C0588-068-1000-M	0.588	14.94	0.068	1.73	1.000	25.40	0.533	13.54	0.473	12.02	22.04	98.04	47.21	8.26	**C0588-068-1000-S**	0.575	14.60	17.45	77.63	41.06	7.18
C0588-068-1125-M	0.588	14.94	0.068	1.73	1.125	28.58	0.591	15.00	0.521	13.24	22.04	98.04	41.25	7.22	**C0588-068-1125-S**	0.638	16.22	17.45	77.63	35.87	6.28
C0588-068-1250-M	0.588	14.94	0.068	1.73	1.250	31.75	0.648	16.46	0.569	14.45	22.04	98.04	36.62	6.41	**C0588-068-1250-S**	0.702	17.83	17.45	77.63	31.84	5.57
C0588-068-1375-M	0.588	14.94	0.068	1.73	1.375	34.93	0.706	17.92	0.617	15.67	22.04	98.04	32.92	5.76	**C0588-068-1375-S**	0.765	19.44	17.45	77.63	28.63	5.01
C0588-068-1500-M	0.588	14.94	0.068	1.73	1.500	38.10	0.763	19.38	0.665	16.88	22.04	98.04	29.91	5.23	**C0588-068-1500-S**	0.829	21.06	17.45	77.63	26.01	4.55
C0588-068-1625-M	0.588	14.94	0.068	1.73	1.625	41.28	0.821	20.84	0.712	18.10	22.04	98.04	27.40	4.79	**C0588-068-1625-S**	0.892	22.67	17.45	77.63	23.82	4.17
C0588-068-1750-M	0.588	14.94	0.068	1.73	1.750	44.45	0.878	22.30	0.760	19.31	22.04	98.04	25.28	4.42	**C0588-068-1750-S**	0.956	24.28	17.45	77.63	21.98	3.85
C0588-068-1875-M	0.588	14.94	0.068	1.73	1.875	47.63	0.935	23.76	0.808	20.53	22.04	98.04	23.46	4.11	**C0588-068-1875-S**	1.019	25.89	17.45	77.63	20.40	3.57
C0588-068-2000-M	0.588	14.94	0.068	1.73	2.000	50.80	0.993	25.22	0.856	21.74	22.04	98.04	21.89	3.83	**C0588-068-2000-S**	1.083	27.51	17.45	77.63	19.03	3.33
C0588-068-2125-M	0.588	14.94	0.068	1.73	2.125	53.98	1.050	26.68	0.904	22.96	22.04	98.04	20.51	3.59	**C0588-068-2125-S**	1.146	29.12	17.45	77.63	17.83	3.12
C0588-068-2250-M	0.588	14.94	0.068	1.73	2.250	57.15	1.108	28.14	0.952	24.17	22.04	98.04	19.30	3.38	**C0588-068-2250-S**	1.210	30.73	17.45	77.63	16.78	2.94
C0588-068-2375-M	0.588	14.94	0.068	1.73	2.375	60.33	1.165	29.60	0.999	25.39	22.04	98.04	18.22	3.19	**C0588-068-2375-S**	1.273	32.35	17.45	77.63	15.84	2.77
C0588-068-2500-M	0.588	14.94	0.068	1.73	2.500	63.50	1.223	31.06	1.047	26.60	22.04	98.04	17.26	3.02	**C0588-068-2500-S**	1.337	33.96	17.45	77.63	15.01	2.63
C0588-068-2625-M	0.588	14.94	0.068	1.73	2.625	66.68	1.280	32.52	1.095	27.82	22.04	98.04	16.39	2.87	**C0588-068-2625-S**	1.401	35.57	17.45	77.63	14.25	2.49
C0588-068-2750-M	0.588	14.94	0.068	1.73	2.750	69.85	1.338	33.98	1.143	29.03	22.04	98.04	15.61	2.73	**C0588-068-2750-S**	1.464	37.19	17.45	77.63	13.57	2.37
C0588-068-2875-M	0.588	14.94	0.068	1.73	2.875	73.03	1.395	35.44	1.191	30.24	22.04	98.04	14.89	2.61	**C0588-068-2875-S**	1.528	38.80	17.45	77.63	12.95	2.27
C0588-068-3000-M	0.588	14.94	0.068	1.73	3.000	76.20	1.453	36.90	1.239	31.46	22.04	98.04	14.24	2.49	**C0588-068-3000-S**	1.591	40.41	17.45	77.63	12.39	2.17
C0588-068-3250-M	0.588	14.94	0.068	1.73	3.250	82.55	1.568	39.82	1.334	33.89	22.04	98.04	13.10	2.29	**C0588-068-3250-S**	1.718	43.64	17.45	77.63	11.39	1.99
C0588-068-3500-M	0.588	14.94	0.068	1.73	3.500	88.90	1.683	42.74	1.430	36.32	22.04	98.04	12.13	2.12	**C0588-068-3500-S**	1.845	46.86	17.45	77.63	10.55	1.85
C0588-068-3750-M	0.588	14.94	0.068	1.73	3.750	95.25	1.797	45.65	1.526	38.75	22.04	98.04	11.29	1.98	**C0588-068-3750-S**	1.972	50.09	17.45	77.63	9.82	1.72
C0588-068-4000-M	0.588	14.94	0.068	1.73	4.000	101.60	1.912	48.57	1.621	41.18	22.04	98.04	10.56	1.85	**C0588-068-4000-S**	2.099	53.32	17.45	77.63	9.18	1.61
C0588-068-4250-M	0.588	14.94	0.068	1.73	4.250	107.95	2.027	51.49	1.717	43.61	22.04	98.04	9.92	1.74	**C0588-068-4250-S**	2.226	56.54	17.45	77.63	8.62	1.51
C0588-068-4500-M	0.588	14.94	0.068	1.73	4.500	114.30	2.142	54.41	1.812	46.04	22.04	98.04	9.35	1.64	**C0588-068-4500-S**	2.353	59.77	17.45	77.63	8.13	1.42
C0588-068-4750-M	0.588	14.94	0.068	1.73	4.750	120.65	2.257	57.33	1.908	48.47	22.04	98.04	8.84	1.55	**C0588-068-4750-S**	2.480	62.99	17.45	77.63	7.69	1.35
C0588-068-5000-M	0.588	14.94	0.068	1.73	5.000	127.00	2.372	60.25	2.004	50.90	22.04	98.04	8.39	1.47	**C0588-068-5000-S**	2.607	66.22	17.45	77.63	7.29	1.28
C0588-068-5250-M	0.588	14.94	0.068	1.73	5.250	133.35	2.487	63.17	2.099	53.33	22.04	98.04	7.98	1.40	**C0588-068-5250-S**	2.734	69.45	17.45	77.63	6.94	1.21
C0588-068-5500-M	0.588	14.94	0.068	1.73	5.500	139.70	2.602	66.09	2.195	55.75	22.04	98.04	7.61	1.33	**C0588-068-5500-S**	2.861	72.67	17.45	77.63	6.61	1.16
C0588-068-5750-M	0.588	14.94	0.068	1.73	5.750	146.05	2.717	69.01	2.291	58.18	22.04	98.04	7.27	1.27	**C0588-068-5750-S**	2.988	75.90	17.45	77.63	6.32	1.11
C0588-068-6000-M	0.588	14.94	0.068	1.73	6.000	152.40	2.832	71.93	2.386	60.61	22.04	98.04	6.96	1.22	**C0588-068-6000-S**	3.115	79.12	17.45	77.63	6.05	1.06
C0588-068-6250-M	0.588	14.94	0.068	1.73	6.250	158.75	2.947	74.85	2.482	63.04	22.04	98.04	6.67	1.17	**C0588-068-6250-S**	3.242	82.35	17.45	77.63	5.80	1.02
C0588-068-6500-M	0.588	14.94	0.068	1.73	6.500	165.10	3.062	77.77	2.578	65.47	22.04	98.04	6.41	1.12	**C0588-068-6500-S**	3.369	85.58	17.45	77.63	5.57	0.98

FOR INFORMATION ON ALTERNATIVE FINISHES, SEE PAGE 311

Part Numbers with an "*" are squared and not ground. **Part Numbers in bold** represent the newly expanded Associated Spring RAYMOND compression spring offering.

MUSIC WIRE															STAINLESS STEEL						
Catalog #	Outside Diameter (OD)		Wire Diameter (d)		Free Length (L) Approx		Load Length (L_1)		Solid Height (Sh) Approx		Load (P) at L_1		Spring Rate (R)		Catalog #	Load Length (L_1)		Load (P) at L_1		Spring Rate (R)	
	in	mm	in	mm	in	mm	in	mm	in	mm	lb	N	lb/in	N/mm		in	mm	lb	N	lb/in	N/mm
C0588-068-6750-M	**0.588**	**14.94**	**0.068**	**1.73**	**6.750**	**171.45**	**3.177**	**80.69**	**2.673**	**67.90**	**22.04**	**98.04**	**6.17**	**1.08**	**C0588-068-6750-S**	**3.496**	**88.80**	**17.45**	**77.63**	**5.36**	**0.94**
C0588-068-7000-M	**0.588**	**14.94**	**0.068**	**1.73**	**7.000**	**177.80**	**3.292**	**83.61**	**2.769**	**70.33**	**22.04**	**98.04**	**5.94**	**1.04**	**C0588-068-7000-S**	**3.623**	**92.03**	**17.45**	**77.63**	**5.17**	**0.90**
C0588-068-7500-M	**0.588**	**14.94**	**0.068**	**1.73**	**7.500**	**190.50**	**3.521**	**89.44**	**2.960**	**75.19**	**22.04**	**98.04**	**5.54**	**0.97**	**C0588-068-7500-S**	**3.877**	**98.48**	**17.45**	**77.63**	**4.82**	**0.84**
C0588-068-8000-M	**0.588**	**14.94**	**0.068**	**1.73**	**8.000**	**203.20**	**3.751**	**95.28**	**3.152**	**80.05**	**22.04**	**98.04**	**5.19**	**0.91**	**C0588-068-8000-S**	**4.131**	**104.93**	**17.45**	**77.63**	**4.51**	**0.79**
C0588-068-8500-M	**0.588**	**14.94**	**0.068**	**1.73**	**8.500**	**215.90**	**3.981**	**101.12**	**3.343**	**84.91**	**22.04**	**98.04**	**4.88**	**0.85**	**C0588-068-8500-S**	**4.385**	**111.38**	**17.45**	**77.63**	**4.24**	**0.74**
C0588-068-9000-M	**0.588**	**14.94**	**0.068**	**1.73**	**9.000**	**228.60**	**4.211**	**106.96**	**3.534**	**89.77**	**22.04**	**98.04**	**4.60**	**0.81**	**C0588-068-9000-S**	**4.639**	**117.84**	**17.45**	**77.63**	**4.00**	**0.70**
C0588-068-9500-M	**0.588**	**14.94**	**0.068**	**1.73**	**9.500**	**241.30**	**4.441**	**112.80**	**3.725**	**94.63**	**22.04**	**98.04**	**4.36**	**0.76**	**C0588-068-9500-S**	**4.893**	**124.29**	**17.45**	**77.63**	**3.79**	**0.66**
C0588-072-0875-M	**0.588**	**14.94**	**0.072**	**1.83**	**0.875**	**22.23**	**0.502**	**12.76**	**0.458**	**11.64**	**25.80**	**114.77**	**69.22**	**12.11**	**C0588-072-0875-S**	**0.536**	**13.62**	**20.39**	**90.71**	**60.19**	**10.53**
C0588-072-0938-M	**0.588**	**14.94**	**0.072**	**1.83**	**0.938**	**23.81**	**0.533**	**13.54**	**0.485**	**12.31**	**25.80**	**114.77**	**63.77**	**11.16**	**C0588-072-0938-S**	**0.570**	**14.47**	**20.39**	**90.71**	**55.45**	**9.70**
C0588-072-1000-M	**0.588**	**14.94**	**0.072**	**1.83**	**1.000**	**25.40**	**0.564**	**14.31**	**0.511**	**12.97**	**25.80**	**114.77**	**59.11**	**10.34**	**C0588-072-1000-S**	**0.603**	**15.32**	**20.39**	**90.71**	**51.40**	**9.00**
C0588-072-1125-M	**0.588**	**14.94**	**0.072**	**1.83**	**1.125**	**28.58**	**0.625**	**15.87**	**0.563**	**14.31**	**25.80**	**114.77**	**51.58**	**9.03**	**C0588-072-1125-S**	**0.670**	**17.03**	**20.39**	**90.71**	**44.85**	**7.85**
C0588-072-1250-M	**0.588**	**14.94**	**0.072**	**1.83**	**1.250**	**31.75**	**0.686**	**17.43**	**0.616**	**15.64**	**25.80**	**114.77**	**45.75**	**8.01**	**C0588-072-1250-S**	**0.737**	**18.73**	**20.39**	**90.71**	**39.78**	**6.96**
C0588-072-1375-M	**0.588**	**14.94**	**0.072**	**1.83**	**1.375**	**34.93**	**0.747**	**18.98**	**0.668**	**16.98**	**25.80**	**114.77**	**41.10**	**7.19**	**C0588-072-1375-S**	**0.804**	**20.43**	**20.39**	**90.71**	**35.74**	**6.26**
C0588-072-1500-M	**0.588**	**14.94**	**0.072**	**1.83**	**1.500**	**38.10**	**0.809**	**20.54**	**0.721**	**18.31**	**25.80**	**114.77**	**37.32**	**6.53**	**C0588-072-1500-S**	**0.872**	**22.14**	**20.39**	**90.71**	**32.45**	**5.68**
C0588-072-1625-M	**0.588**	**14.94**	**0.072**	**1.83**	**1.625**	**41.28**	**0.870**	**22.09**	**0.773**	**19.64**	**25.80**	**114.77**	**34.17**	**5.98**	**C0588-072-1625-S**	**0.939**	**23.84**	**20.39**	**90.71**	**29.71**	**5.20**
C0588-072-1750-M	**0.588**	**14.94**	**0.072**	**1.83**	**1.750**	**44.45**	**0.931**	**23.65**	**0.826**	**20.98**	**25.80**	**114.77**	**31.51**	**5.51**	**C0588-072-1750-S**	**1.006**	**25.54**	**20.39**	**90.71**	**27.40**	**4.79**
C0588-072-1875-M	**0.588**	**14.94**	**0.072**	**1.83**	**1.875**	**47.63**	**0.992**	**25.21**	**0.878**	**22.31**	**25.80**	**114.77**	**29.23**	**5.12**	**C0588-072-1875-S**	**1.073**	**27.25**	**20.39**	**90.71**	**25.42**	**4.45**
C0588-072-2000-M	**0.588**	**14.94**	**0.072**	**1.83**	**2.000**	**50.80**	**1.054**	**26.76**	**0.931**	**23.65**	**25.80**	**114.77**	**27.26**	**4.77**	**C0588-072-2000-S**	**1.140**	**28.95**	**20.39**	**90.71**	**23.71**	**4.15**
C0588-072-2125-M	**0.588**	**14.94**	**0.072**	**1.83**	**2.125**	**53.98**	**1.115**	**28.32**	**0.983**	**24.98**	**25.80**	**114.77**	**25.54**	**4.47**	**C0588-072-2125-S**	**1.207**	**30.65**	**20.39**	**90.71**	**22.21**	**3.89**
C0588-072-2250-M	**0.588**	**14.94**	**0.072**	**1.83**	**2.250**	**57.15**	**1.176**	**29.87**	**1.036**	**26.31**	**25.80**	**114.77**	**24.03**	**4.20**	**C0588-072-2250-S**	**1.274**	**32.36**	**20.39**	**90.71**	**20.89**	**3.66**
C0588-072-2375-M	**0.588**	**14.94**	**0.072**	**1.83**	**2.375**	**60.33**	**1.237**	**31.43**	**1.088**	**27.65**	**25.80**	**114.77**	**22.68**	**3.97**	**C0588-072-2375-S**	**1.341**	**34.06**	**20.39**	**90.71**	**19.72**	**3.45**
C0588-072-2500-M	**0.588**	**14.94**	**0.072**	**1.83**	**2.500**	**63.50**	**1.299**	**32.99**	**1.141**	**28.98**	**25.80**	**114.77**	**21.48**	**3.76**	**C0588-072-2500-S**	**1.408**	**35.77**	**20.39**	**90.71**	**18.68**	**3.27**
C0588-072-2625-M	**0.588**	**14.94**	**0.072**	**1.83**	**2.625**	**66.68**	**1.360**	**34.54**	**1.193**	**30.31**	**25.80**	**114.77**	**20.40**	**3.57**	**C0588-072-2625-S**	**1.475**	**37.47**	**20.39**	**90.71**	**17.74**	**3.10**
C0588-072-2750-M	**0.588**	**14.94**	**0.072**	**1.83**	**2.750**	**69.85**	**1.421**	**36.10**	**1.246**	**31.65**	**25.80**	**114.77**	**19.42**	**3.40**	**C0588-072-2750-S**	**1.542**	**39.17**	**20.39**	**90.71**	**16.88**	**2.95**
C0588-072-2875-M	**0.588**	**14.94**	**0.072**	**1.83**	**2.875**	**73.03**	**1.482**	**37.65**	**1.299**	**32.98**	**25.80**	**114.77**	**18.53**	**3.24**	**C0588-072-2875-S**	**1.609**	**40.88**	**20.39**	**90.71**	**16.11**	**2.82**
C0588-072-3000-M	**0.588**	**14.94**	**0.072**	**1.83**	**3.000**	**76.20**	**1.544**	**39.21**	**1.351**	**34.32**	**25.80**	**114.77**	**17.72**	**3.10**	**C0588-072-3000-S**	**1.676**	**42.58**	**20.39**	**90.71**	**15.41**	**2.70**
C0588-072-3250-M	**0.588**	**14.94**	**0.072**	**1.83**	**3.250**	**82.55**	**1.666**	**42.32**	**1.456**	**36.98**	**25.80**	**114.77**	**16.29**	**2.85**	**C0588-072-3250-S**	**1.810**	**45.99**	**20.39**	**90.71**	**14.17**	**2.48**
C0588-072-3500-M	**0.588**	**14.94**	**0.072**	**1.83**	**3.500**	**88.90**	**1.789**	**45.43**	**1.561**	**39.65**	**25.80**	**114.77**	**15.08**	**2.64**	**C0588-072-3500-S**	**1.945**	**49.39**	**20.39**	**90.71**	**13.11**	**2.29**
C0588-072-3750-M	**0.588**	**14.94**	**0.072**	**1.83**	**3.750**	**95.25**	**1.911**	**48.55**	**1.666**	**42.32**	**25.80**	**114.77**	**14.03**	**2.46**	**C0588-072-3750-S**	**2.079**	**52.80**	**20.39**	**90.71**	**12.20**	**2.14**
C0588-072-4000-M	**0.588**	**14.94**	**0.072**	**1.83**	**4.000**	**101.60**	**2.034**	**51.66**	**1.771**	**44.99**	**25.80**	**114.77**	**13.12**	**2.30**	**C0588-072-4000-S**	**2.213**	**56.21**	**20.39**	**90.71**	**11.41**	**2.00**
C0588-072-4250-M	**0.588**	**14.94**	**0.072**	**1.83**	**4.250**	**107.95**	**2.156**	**54.77**	**1.876**	**47.65**	**25.80**	**114.77**	**12.32**	**2.16**	**C0588-072-4250-S**	**2.347**	**59.61**	**20.39**	**90.71**	**10.72**	**1.88**
C0588-072-4500-M	**0.588**	**14.94**	**0.072**	**1.83**	**4.500**	**114.30**	**2.279**	**57.88**	**1.981**	**50.32**	**25.80**	**114.77**	**11.62**	**2.03**	**C0588-072-4500-S**	**2.481**	**63.02**	**20.39**	**90.71**	**10.10**	**1.77**
C0588-072-4750-M	**0.588**	**14.94**	**0.072**	**1.83**	**4.750**	**120.65**	**2.401**	**60.99**	**2.086**	**52.99**	**25.80**	**114.77**	**10.99**	**1.92**	**C0588-072-4750-S**	**2.615**	**66.43**	**20.39**	**90.71**	**9.55**	**1.67**
C0588-072-5000-M	**0.588**	**14.94**	**0.072**	**1.83**	**5.000**	**127.00**	**2.524**	**64.11**	**2.191**	**55.66**	**25.80**	**114.77**	**10.42**	**1.82**	**C0588-072-5000-S**	**2.749**	**69.83**	**20.39**	**90.71**	**9.06**	**1.59**
C0588-072-5250-M	**0.588**	**14.94**	**0.072**	**1.83**	**5.250**	**133.35**	**2.646**	**67.22**	**2.296**	**58.33**	**25.80**	**114.77**	**9.91**	**1.73**	**C0588-072-5250-S**	**2.884**	**73.24**	**20.39**	**90.71**	**8.62**	**1.51**
C0588-072-5500-M	**0.588**	**14.94**	**0.072**	**1.83**	**5.500**	**139.70**	**2.769**	**70.33**	**2.401**	**60.99**	**25.80**	**114.77**	**9.45**	**1.65**	**C0588-072-5500-S**	**3.018**	**76.65**	**20.39**	**90.71**	**8.22**	**1.44**
C0588-072-5750-M	**0.588**	**14.94**	**0.072**	**1.83**	**5.750**	**146.05**	**2.891**	**73.44**	**2.506**	**63.66**	**25.80**	**114.77**	**9.03**	**1.58**	**C0588-072-5750-S**	**3.152**	**80.06**	**20.39**	**90.71**	**7.85**	**1.37**
C0588-072-6000-M	**0.588**	**14.94**	**0.072**	**1.83**	**6.000**	**152.40**	**3.014**	**76.55**	**2.611**	**66.33**	**25.80**	**114.77**	**8.64**	**1.51**	**C0588-072-6000-S**	**3.286**	**83.46**	**20.39**	**90.71**	**7.51**	**1.31**
C0588-072-6250-M	**0.588**	**14.94**	**0.072**	**1.83**	**6.250**	**158.75**	**3.136**	**79.67**	**2.716**	**69.00**	**25.80**	**114.77**	**8.29**	**1.45**	**C0588-072-6250-S**	**3.420**	**86.87**	**20.39**	**90.71**	**7.21**	**1.26**
C0588-072-6500-M	**0.588**	**14.94**	**0.072**	**1.83**	**6.500**	**165.10**	**3.259**	**82.78**	**2.821**	**71.66**	**25.80**	**114.77**	**7.96**	**1.39**	**C0588-072-6500-S**	**3.554**	**90.28**	**20.39**	**90.71**	**6.92**	**1.21**
C0588-072-6750-M	**0.588**	**14.94**	**0.072**	**1.83**	**6.750**	**171.45**	**3.382**	**85.89**	**2.926**	**74.33**	**25.80**	**114.77**	**7.66**	**1.34**	**C0588-072-6750-S**	**3.688**	**93.68**	**20.39**	**90.71**	**6.66**	**1.17**
C0588-072-7000-M	**0.588**	**14.94**	**0.072**	**1.83**	**7.000**	**177.80**	**3.504**	**89.00**	**3.031**	**77.00**	**25.80**	**114.77**	**7.38**	**1.29**	**C0588-072-7000-S**	**3.822**	**97.09**	**20.39**	**90.71**	**6.42**	**1.12**
C0588-072-7500-M	**0.588**	**14.94**	**0.072**	**1.83**	**7.500**	**190.50**	**3.749**	**95.23**	**3.242**	**82.34**	**25.80**	**114.77**	**6.88**	**1.20**	**C0588-072-7500-S**	**4.091**	**103.90**	**20.39**	**90.71**	**5.98**	**1.05**
C0588-072-8000-M	**0.588**	**14.94**	**0.072**	**1.83**	**8.000**	**203.20**	**3.994**	**101.45**	**3.452**	**87.67**	**25.80**	**114.77**	**6.44**	**1.13**	**C0588-072-8000-S**	**4.359**	**110.72**	**20.39**	**90.71**	**5.60**	**0.98**
C0588-072-8500-M	**0.588**	**14.94**	**0.072**	**1.83**	**8.500**	**215.90**	**4.239**	**107.68**	**3.662**	**93.01**	**25.80**	**114.77**	**6.06**	**1.06**	**C0588-072-8500-S**	**4.627**	**117.53**	**20.39**	**90.71**	**5.27**	**0.92**
C0588-072-9000-M	**0.588**	**14.94**	**0.072**	**1.83**	**9.000**	**228.60**	**4.484**	**113.90**	**3.872**	**98.34**	**25.80**	**114.77**	**5.71**	**1.00**	**C0588-072-9000-S**	**4.896**	**124.35**	**20.39**	**90.71**	**4.97**	**0.87**
C0588-072-9500-M	**0.588**	**14.94**	**0.072**	**1.83**	**9.500**	**241.30**	**4.729**	**120.12**	**4.082**	**103.68**	**25.80**	**114.77**	**5.41**	**0.95**	**C0588-072-9500-S**	**5.164**	**131.16**	**20.39**	**90.71**	**4.70**	**0.82**
C0588-085-0875-M	**0.588**	**14.94**	**0.085**	**2.16**	**0.875**	**22.23**	**0.582**	**14.79**	**0.557**	**14.15**	**40.67**	**180.90**	**138.96**	**24.32**	**C0588-085-0875-S**	**0.611**	**15.52**	**31.92**	**141.98**	**120.83**	**21.15**
C0588-085-0938-M	**0.588**	**14.94**	**0.085**	**2.16**	**0.938**	**23.81**	**0.619**	**15.72**	**0.591**	**15.01**	**40.67**	**180.90**	**127.64**	**22.34**	**C0588-085-0938-S**	**0.650**	**16.51**	**31.92**	**141.98**	**110.99**	**19.42**
C0588-085-1000-M	**0.588**	**14.94**	**0.085**	**2.16**	**1.000**	**25.40**	**0.655**	**16.65**	**0.624**	**15.86**	**40.67**	**180.90**	**118.03**	**20.66**	**C0588-085-1000-S**	**0.689**	**17.50**	**31.92**	**141.98**	**102.63**	**17.96**
C0588-085-1125-M	**0.588**	**14.94**	**0.085**	**2.16**	**1.125**	**28.58**	**0.729**	**18.51**	**0.692**	**17.56**	**40.67**	**180.90**	**102.58**	**17.95**	**C0588-085-1125-S**	**0.767**	**19.49**	**31.92**	**141.98**	**89.20**	**15.61**
C0588-085-1250-M	**0.588**	**14.94**	**0.085**	**2.16**	**1.250**	**31.75**	**0.802**	**20.36**	**0.759**	**19.27**	**40.67**	**180.90**	**90.71**	**15.87**	**C0588-085-1250-S**	**0.845**	**21.47**	**31.92**	**141.98**	**78.88**	**13.80**
C0588-085-1375-M	**0.588**	**14.94**	**0.085**	**2.16**	**1.375**	**34.93**	**0.875**	**22.22**	**0.826**	**20.98**	**40.67**	**180.90**	**81.30**	**14.23**	**C0588-085-1375-S**	**0.924**	**23.46**	**31.92**	**141.98**	**70.69**	**12.37**
C0588-085-1500-M	**0.588**	**14.94**	**0.085**	**2.16**	**1.500**	**38.10**	**0.948**	**24.08**	**0.893**	**22.68**	**40.67**	**180.90**	**73.66**	**12.89**	**C0588-085-1500-S**	**1.002**	**25.44**	**31.92**	**141.98**	**64.05**	**11.21**
C0588-085-1625-M	**0.588**	**14.94**	**0.085**	**2.16**	**1.625**	**41.28**	**1.021**	**25.93**	**0.960**	**24.39**	**40.67**	**180.90**	**67.33**	**11.78**	**C0588-085-1625-S**	**1.080**	**27.43**	**31.92**	**141.98**	**58.55**	**10.25**
C0588-085-1750-M	**0.588**	**14.94**	**0.085**	**2.16**	**1.750**	**44.45**	**1.094**	**27.79**	**1.027**	**26.09**	**40.67**	**180.90**	**62.00**	**10.85**	**C0588-085-1750-S**	**1.158**	**29.41**	**31.92**	**141.98**	**53.92**	**9.44**
C0588-085-1875-M	**0.588**	**14.94**	**0.085**	**2.16**	**1.875**	**47.63**	**1.167**	**29.65**	**1.094**	**27.80**	**40.67**	**180.90**	**57.46**	**10.05**	**C0588-085-1875-S**	**1.236**	**31.40**	**31.92**	**141.98**	**49.96**	**8.74**
C0588-085-2000-M	**0.588**	**14.94**	**0.085**	**2.16**	**2.000**	**50.80**	**1.240**	**31.50**	**1.162**	**29.50**	**40.67**	**180.90**	**53.53**	**9.37**	**C0588-085-2000-S**	**1.314**	**33.38**	**31.92**	**141.98**	**46.55**	**8.15**
C0588-085-2125-M	**0.588**	**14.94**	**0.085**	**2.16**	**2.125**	**53.98**	**1.313**	**33.36**	**1.229**	**31.21**	**40.67**	**180.90**	**50.11**	**8.77**	**C0588-085-2125-S**	**1.392**	**35.37**	**31.92**	**141.98**	**43.57**	**7.63**
C0588-085-2250-M	**0.588**	**14.94**	**0.085**	**2.16**	**2.250**	**57.15**	**1.387**	**35.22**	**1.296**	**32.91**	**40.67**	**180.90**	**47.10**	**8.24**	**C0588-085-2250-S**	**1.471**	**37.35**	**31.92**	**141.98**	**40.96**	**7.17**
C0588-085-2375-M	**0.588**	**14.94**	**0.085**	**2.16**	**2.375**	**60.33**	**1.460**	**37.07**	**1.363**	**34.62**	**40.67**	**180.90**	**44.43**	**7.77**	**C0588-085-2375-S**	**1.549**	**39.34**	**31.92**	**141.98**	**38.63**	**6.76**
C0588-085-2500-M	**0.588**	**14.94**	**0.085**	**2.16**	**2.500**	**63.50**	**1.533**	**38.93**	**1.430**	**36.33**	**40.67**	**180.90**	**42.05**	**7.36**	**C0588-085-2500-S**	**1.627**	**41.33**	**31.92**	**141.98**	**36.56**	**6.40**
C0588-085-2625-M	**0.588**	**14.94**	**0.085**	**2.16**	**2.625**	**66.68**	**1.606**	**40.79**	**1.497**	**38.03**	**40.67**	**180.90**	**39.90**	**6.98**	**C0588-085-2625-S**	**1.705**	**43.31**	**31.92**	**141.98**	**34.70**	**6.07**
C0588-085-2750-M	**0.588**	**14.94**	**0.085**	**2.16**	**2.750**	**69.85**	**1.679**	**42.65**	**1.564**	**39.74**	**40.67**	**180.90**	**37.97**	**6.64**	**C0588-085-2750-S**	**1.783**	**45.30**	**31.92**	**141.98**	**33.02**	**5.78**

Part Numbers with an "*" are squared and not ground. **Part Numbers in bold** represent the newly expanded Associated Spring RAYMOND compression spring offering.

MUSIC WIRE															STAINLESS STEEL					
Catalog #	Outside Diameter (OD)		Wire Diameter (d)		Free Length (L) Approx		Load Length (L_1)		Solid Height (Sh) Approx		Load (P) at L_1		Spring Rate (R)		Catalog #	Load Length (L_1)		Load (P) at L_1		Spring Rate (R)	
	in	mm	in	mm	in	mm	in	mm	in	mm	lb	N	lb/in	N/mm		in	mm	lb	N	lb/in	N/mm
C0588-085-2875-M	0.588	14.94	0.085	2.16	2.875	73.03	1.752	44.50	1.632	41.44	40.67	180.90	36.22	6.34	**C0588-085-2875-S**	1.861	47.28	31.92	141.98	31.49	5.51
C0588-085-3000-M	0.588	14.94	0.085	2.16	3.000	76.20	1.825	46.36	1.699	43.15	40.67	180.90	34.62	6.06	**C0588-085-3000-S**	1.940	49.27	31.92	141.98	30.10	5.27
C0588-085-3250-M	0.588	14.94	0.085	2.16	3.250	82.55	1.971	50.07	1.833	46.56	40.67	180.90	31.81	5.57	**C0588-085-3250-S**	2.096	53.24	31.92	141.98	27.66	4.84
C0588-085-3500-M	0.588	14.94	0.085	2.16	3.500	88.90	2.118	53.79	1.967	49.97	40.67	180.90	29.42	5.15	**C0588-085-3500-S**	2.252	57.21	31.92	141.98	25.58	4.48
C0588-085-3750-M	0.588	14.94	0.085	2.16	3.750	95.25	2.264	57.50	2.102	53.38	40.67	180.90	27.36	4.79	**C0588-085-3750-S**	2.409	61.18	31.92	141.98	23.80	4.16
C0588-085-4000-M	0.588	14.94	0.085	2.16	4.000	101.60	2.410	61.21	2.236	56.79	40.67	180.90	25.58	4.48	**C0588-085-4000-S**	2.565	65.15	31.92	141.98	22.24	3.89
C0588-085-4250-M	0.588	14.94	0.085	2.16	4.250	107.95	2.556	64.93	2.370	60.20	40.67	180.90	24.01	4.20	**C0588-085-4250-S**	2.721	69.12	31.92	141.98	20.88	3.65
C0588-085-4500-M	0.588	14.94	0.085	2.16	4.500	114.30	2.702	68.64	2.505	63.61	40.67	180.90	22.62	3.96	**C0588-085-4500-S**	2.878	73.09	31.92	141.98	19.67	3.44
C0588-085-4750-M	0.588	14.94	0.085	2.16	4.750	120.65	2.849	72.36	2.639	67.03	40.67	180.90	21.39	3.74	**C0588-085-4750-S**	3.034	77.06	31.92	141.98	18.60	3.26
C0588-085-5000-M	0.588	14.94	0.085	2.16	5.000	127.00	2.995	76.07	2.773	70.44	40.67	180.90	20.28	3.55	**C0588-085-5000-S**	3.190	81.03	31.92	141.98	17.64	3.09
C0588-085-5250-M	0.588	14.94	0.085	2.16	5.250	133.35	3.141	79.78	2.907	73.85	40.67	180.90	19.28	3.37	**C0588-085-5250-S**	3.347	85.00	31.92	141.98	16.77	2.93
C0588-085-5500-M	0.588	14.94	0.085	2.16	5.500	139.70	3.287	83.50	3.042	77.26	40.67	180.90	18.38	3.22	**C0588-085-5500-S**	3.503	88.97	31.92	141.98	15.98	2.80
C0588-085-5750-M	0.588	14.94	0.085	2.16	5.750	146.05	3.434	87.21	3.176	80.67	40.67	180.90	17.56	3.07	**C0588-085-5750-S**	3.659	92.94	31.92	141.98	15.27	2.67
C0588-085-6000-M	0.588	14.94	0.085	2.16	6.000	152.40	3.580	90.93	3.310	84.08	40.67	180.90	16.80	2.94	**C0588-085-6000-S**	3.816	96.92	31.92	141.98	14.61	2.56
C0588-085-6250-M	0.588	14.94	0.085	2.16	6.250	158.75	3.726	94.64	3.445	87.49	40.67	180.90	16.11	2.82	**C0588-085-6250-S**	3.972	100.89	31.92	141.98	14.01	2.45
C0588-085-6500-M	0.588	14.94	0.085	2.16	6.500	165.10	3.872	98.35	3.579	90.90	40.67	180.90	15.48	2.71	**C0588-085-6500-S**	4.128	104.86	31.92	141.98	13.46	2.35
C0588-085-6750-M	0.588	14.94	0.085	2.16	6.750	171.45	4.018	102.07	3.713	94.31	40.67	180.90	14.89	2.61	**C0588-085-6750-S**	4.285	108.83	31.92	141.98	12.95	2.27
C0588-085-7000-M	0.588	14.94	0.085	2.16	7.000	177.80	4.165	105.78	3.847	97.73	40.67	180.90	14.34	2.51	**C0588-085-7000-S**	4.441	112.80	31.92	141.98	12.47	2.18
C0588-085-7500-M	0.588	14.94	0.085	2.16	7.500	190.50	4.457	113.21	4.116	104.55	40.67	180.90	13.37	2.34	**C0588-085-7500-S**	4.754	120.74	31.92	141.98	11.62	2.03
C0588-085-8000-M	0.588	14.94	0.085	2.16	8.000	203.20	4.749	120.64	4.385	111.37	40.67	180.90	12.51	2.19	**C0588-085-8000-S**	5.066	128.68	31.92	141.98	10.88	1.90
C0588-085-8500-M	0.588	14.94	0.085	2.16	8.500	215.90	5.042	128.06	4.653	118.19	40.67	180.90	11.76	2.06	**C0588-085-8500-S**	5.379	136.62	31.92	141.98	10.23	1.79
C0588-085-9000-M	0.588	14.94	0.085	2.16	9.000	228.60	5.334	135.49	4.922	125.01	40.67	180.90	11.09	1.94	**C0588-085-9000-S**	5.692	144.56	31.92	141.98	9.65	1.69
C0588-085-9500-M	0.588	14.94	0.085	2.16	9.500	241.30	5.627	142.92	5.190	131.84	40.67	180.90	10.50	1.84	**C0588-085-9500-S**	6.004	152.51	31.92	141.98	9.13	1.60
C0588-092-0875-M	0.588	14.94	0.092	2.34	0.875	22.23	0.621	15.76	0.604	15.35	50.44	224.37	198.24	34.69	**C0588-092-0875-S**	0.646	16.42	39.42	175.33	172.38	30.17
C0588-092-0938-M	0.588	14.94	0.092	2.34	0.938	23.81	0.660	16.77	0.642	16.30	50.44	224.37	181.80	31.81	**C0588-092-0938-S**	0.688	17.48	39.42	175.33	158.08	27.66
C0588-092-1000-M	0.588	14.94	0.092	2.34	1.000	25.40	0.700	17.77	0.679	17.24	50.44	224.37	167.87	29.38	**C0588-092-1000-S**	0.730	18.54	39.42	175.33	145.98	25.55
C0588-092-1125-M	0.588	14.94	0.092	2.34	1.125	28.58	0.779	19.77	0.753	19.13	50.44	224.37	145.57	25.48	**C0588-092-1125-S**	0.814	20.67	39.42	175.33	126.58	22.15
C0588-092-1250-M	0.588	14.94	0.092	2.34	1.250	31.75	0.857	21.78	0.828	21.02	50.44	224.37	128.50	22.49	**C0588-092-1250-S**	0.897	22.79	39.42	175.33	111.74	19.55
C0588-092-1375-M	0.588	14.94	0.092	2.34	1.375	34.93	0.936	23.79	0.902	22.91	50.44	224.37	115.02	20.13	**C0588-092-1375-S**	0.981	24.91	39.42	175.33	100.01	17.50
C0588-092-1500-M	0.588	14.94	0.092	2.34	1.500	38.10	1.015	25.79	0.976	24.80	50.44	224.37	104.09	18.22	**C0588-092-1500-S**	1.065	27.04	39.42	175.33	90.51	15.84
C0588-092-1625-M	0.588	14.94	0.092	2.34	1.625	41.28	1.094	27.80	1.051	26.69	50.44	224.37	95.06	16.64	**C0588-092-1625-S**	1.148	29.16	39.42	175.33	82.66	14.47
C0588-092-1750-M	0.588	14.94	0.092	2.34	1.750	44.45	1.173	29.80	1.125	28.58	50.44	224.37	87.47	15.31	**C0588-092-1750-S**	1.232	31.29	39.42	175.33	76.06	13.31
C0588-092-1875-M	0.588	14.94	0.092	2.34	1.875	47.63	1.252	31.81	1.200	30.47	50.44	224.37	81.01	14.18	**C0588-092-1875-S**	1.315	33.41	39.42	175.33	70.44	12.33
C0588-092-2000-M	0.588	14.94	0.092	2.34	2.000	50.80	1.331	33.82	1.274	32.36	50.44	224.37	75.43	13.20	**C0588-092-2000-S**	1.399	35.54	39.42	175.33	65.59	11.48
C0588-092-2125-M	0.588	14.94	0.092	2.34	2.125	53.98	1.410	35.82	1.348	34.25	50.44	224.37	70.57	12.35	**C0588-092-2125-S**	1.483	37.66	39.42	175.33	61.37	10.74
C0588-092-2250-M	0.588	14.94	0.092	2.34	2.250	57.15	1.489	37.83	1.423	36.14	50.44	224.37	66.30	11.60	**C0588-092-2250-S**	1.566	39.79	39.42	175.33	57.66	10.09
C0588-092-2375-M	0.588	14.94	0.092	2.34	2.375	60.33	1.568	39.83	1.497	38.03	50.44	224.37	62.52	10.94	**C0588-092-2375-S**	1.650	41.91	39.42	175.33	54.37	9.51
C0588-092-2500-M	0.588	14.94	0.092	2.34	2.500	63.50	1.647	41.84	1.572	39.92	50.44	224.37	59.15	10.35	**C0588-092-2500-S**	1.734	44.03	39.42	175.33	51.43	9.00
C0588-092-2625-M	0.588	14.94	0.092	2.34	2.625	66.68	1.726	43.85	1.646	41.81	50.44	224.37	56.12	9.82	**C0588-092-2625-S**	1.817	46.16	39.42	175.33	48.80	8.54
C0588-092-2750-M	0.588	14.94	0.092	2.34	2.750	69.85	1.805	45.85	1.720	43.70	50.44	224.37	53.38	9.34	**C0588-092-2750-S**	1.901	48.28	39.42	175.33	46.42	8.12
C0588-092-2875-M	0.588	14.94	0.092	2.34	2.875	73.03	1.884	47.86	1.795	45.59	50.44	224.37	50.90	8.91	**C0588-092-2875-S**	1.985	50.41	39.42	175.33	44.27	7.75
C0588-092-3000-M	0.588	14.94	0.092	2.34	3.000	76.20	1.963	49.86	1.869	47.48	50.44	224.37	48.65	8.51	**C0588-092-3000-S**	2.068	52.53	39.42	175.33	42.30	7.40
C0588-092-3250-M	0.588	14.94	0.092	2.34	3.250	82.55	2.121	53.87	2.018	51.26	50.44	224.37	44.68	7.82	**C0588-092-3250-S**	2.235	56.78	39.42	175.33	38.85	6.80
C0588-092-3500-M	0.588	14.94	0.092	2.34	3.500	88.90	2.279	57.89	2.167	55.03	50.44	224.37	41.31	7.23	**C0588-092-3500-S**	2.403	61.03	39.42	175.33	35.92	6.29
C0588-092-3750-M	0.588	14.94	0.092	2.34	3.750	95.25	2.437	61.90	2.315	58.81	50.44	224.37	38.41	6.72	**C0588-092-3750-S**	2.570	65.28	39.42	175.33	33.40	5.85
C0588-092-4000-M	0.588	14.94	0.092	2.34	4.000	101.60	2.595	65.91	2.464	62.59	50.44	224.37	35.90	6.28	**C0588-092-4000-S**	2.737	69.53	39.42	175.33	31.22	5.46
C0588-092-4250-M	0.588	14.94	0.092	2.34	4.250	107.95	2.753	69.92	2.613	66.37	50.44	224.37	33.69	5.90	**C0588-092-4250-S**	2.905	73.77	39.42	175.33	29.30	5.13
C0588-092-4500-M	0.588	14.94	0.092	2.34	4.500	114.30	2.911	73.93	2.762	70.15	50.44	224.37	31.74	5.55	**C0588-092-4500-S**	3.072	78.02	39.42	175.33	27.60	4.83
C0588-092-4750-M	0.588	14.94	0.092	2.34	4.750	120.65	3.069	77.95	2.911	73.93	50.44	224.37	30.00	5.25	**C0588-092-4750-S**	3.239	82.27	39.42	175.33	26.09	4.57
C0588-092-5000-M	0.588	14.94	0.092	2.34	5.000	127.00	3.227	81.96	3.059	77.71	50.44	224.37	28.44	4.98	**C0588-092-5000-S**	3.406	86.52	39.42	175.33	24.73	4.33
C0588-092-5250-M	0.588	14.94	0.092	2.34	5.250	133.35	3.385	85.97	3.208	81.49	50.44	224.37	27.04	4.73	**C0588-092-5250-S**	3.574	90.77	39.42	175.33	23.51	4.11
C0588-092-5500-M	0.588	14.94	0.092	2.34	5.500	139.70	3.543	89.98	3.357	85.27	50.44	224.37	25.77	4.51	**C0588-092-5500-S**	3.741	95.02	39.42	175.33	22.41	3.92
C0588-092-5750-M	0.588	14.94	0.092	2.34	5.750	146.05	3.701	93.99	3.506	89.05	50.44	224.37	24.61	4.31	**C0588-092-5750-S**	3.908	99.27	39.42	175.33	21.40	3.75
C0588-092-6000-M	0.588	14.94	0.092	2.34	6.000	152.40	3.858	98.00	3.655	92.83	50.44	224.37	23.55	4.12	**C0588-092-6000-S**	4.075	103.52	39.42	175.33	20.48	3.58
C0588-092-6250-M	0.588	14.94	0.092	2.34	6.250	158.75	4.016	102.02	3.803	96.61	50.44	224.37	22.58	3.95	**C0588-092-6250-S**	4.243	107.76	39.42	175.33	19.64	3.44
C0588-092-6500-M	0.588	14.94	0.092	2.34	6.500	165.10	4.174	106.03	3.952	100.38	50.44	224.37	21.69	3.80	**C0588-092-6500-S**	4.410	112.01	39.42	175.33	18.86	3.30
C0588-092-6750-M	0.588	14.94	0.092	2.34	6.750	171.45	4.332	110.04	4.101	104.16	50.44	224.37	20.86	3.65	**C0588-092-6750-S**	4.577	116.26	39.42	175.33	18.14	3.17
C0588-092-7000-M	0.588	14.94	0.092	2.34	7.000	177.80	4.490	114.05	4.250	107.94	50.44	224.37	20.10	3.52	**C0588-092-7000-S**	4.745	120.51	39.42	175.33	17.48	3.06
C0588-092-7500-M	0.588	14.94	0.092	2.34	7.500	190.50	4.806	122.08	4.547	115.50	50.44	224.37	18.72	3.28	**C0588-092-7500-S**	5.079	129.01	39.42	175.33	16.28	2.85
C0588-092-8000-M	0.588	14.94	0.092	2.34	8.000	203.20	5.122	130.10	4.845	123.06	50.44	224.37	17.53	3.07	**C0588-092-8000-S**	5.414	137.51	39.42	175.33	15.24	2.67
C0588-092-8500-M	0.588	14.94	0.092	2.34	8.500	215.90	5.438	138.12	5.142	130.62	50.44	224.37	16.47	2.88	**C0588-092-8500-S**	5.748	146.00	39.42	175.33	14.32	2.51
C0588-092-9000-M	0.588	14.94	0.092	2.34	9.000	228.60	5.754	146.15	5.440	138.18	50.44	224.37	15.54	2.72	**C0588-092-9000-S**	6.083	154.50	39.42	175.33	13.51	2.36
C0588-092-9500-M	0.588	14.94	0.092	2.34	9.500	241.30	6.070	154.17	5.738	145.73	50.44	224.37	14.70	2.57	**C0588-092-9500-S**	6.417	163.00	39.42	175.33	12.79	2.24
C0588-098-0875-M	0.588	14.94	0.098	2.49	0.875	22.23	0.650	16.52	0.641	16.29	59.84	266.20	266.35	46.61	**C0588-098-0875-S**	0.674	17.12	46.58	207.21	231.61	40.53

FOR INFORMATION ON ALTERNATIVE FINISHES, SEE PAGE 311

Part Numbers with an "*" are squared and not ground. **Part Numbers in bold** represent the newly expanded Associated Spring RAYMOND compression spring offering.

(OD) 0.588 - 0.588

MUSIC WIRE															STAINLESS STEEL						
Catalog #	Outside Diameter (OD)		Wire Diameter (d)		Free Length (L) Approx		Load Length (L_1)		Solid Height (Sh) Approx		Load (P) at L_1		Spring Rate (R)		Catalog #	Load Length (L_1)		Load (P) at L_1		Spring Rate (R)	
	in	mm	in	mm	in	mm	in	mm	in	mm	lb	N	lb/in	N/mm		in	mm	lb	N	lb/in	N/mm
C0588-098-0938-M	0.588	14.94	0.098	2.49	0.938	23.81	0.692	17.58	0.681	17.30	59.84	266.20	243.90	42.68	**C0588-098-0938-S**	0.718	18.23	46.58	207.21	212.09	37.11
C0588-098-1000-M	0.588	14.94	0.098	2.49	1.000	25.40	0.734	18.64	0.721	18.32	59.84	266.20	224.94	39.36	**C0588-098-1000-S**	0.762	19.35	46.58	207.21	195.60	34.23
C0588-098-1125-M	0.588	14.94	0.098	2.49	1.125	28.58	0.818	20.77	0.802	20.36	59.84	266.20	194.67	34.07	**C0588-098-1125-S**	0.850	21.59	46.58	207.21	169.28	29.62
C0588-098-1250-M	0.588	14.94	0.098	2.49	1.250	31.75	0.901	22.89	0.882	22.39	59.84	266.20	171.59	30.03	**C0588-098-1250-S**	0.938	23.82	46.58	207.21	149.20	26.11
C0588-098-1375-M	0.588	14.94	0.098	2.49	1.375	34.93	0.985	25.02	0.962	24.43	59.84	266.20	153.39	26.84	**C0588-098-1375-S**	1.026	26.05	46.58	207.21	133.39	23.34
C0588-098-1500-M	0.588	14.94	0.098	2.49	1.500	38.10	1.069	27.14	1.042	26.47	59.84	266.20	138.69	24.27	**C0588-098-1500-S**	1.114	28.29	46.58	207.21	120.60	21.10
C0588-098-1625-M	0.588	14.94	0.098	2.49	1.625	41.28	1.152	29.26	1.122	28.50	59.84	266.20	126.56	22.15	**C0588-098-1625-S**	1.202	30.52	46.58	207.21	110.05	19.26
C0588-098-1750-M	0.588	14.94	0.098	2.49	1.750	44.45	1.236	31.39	1.202	30.54	59.84	266.20	116.38	20.37	**C0588-098-1750-S**	1.290	32.76	46.58	207.21	101.20	17.71
C0588-098-1875-M	0.588	14.94	0.098	2.49	1.875	47.63	1.319	33.51	1.282	32.57	59.84	266.20	107.71	18.85	**C0588-098-1875-S**	1.378	34.99	46.58	207.21	93.66	16.39
C0588-098-2000-M	0.588	14.94	0.098	2.49	2.000	50.80	1.403	35.64	1.363	34.61	59.84	266.20	100.25	17.54	**C0588-098-2000-S**	1.466	37.23	46.58	207.21	87.17	15.26
C0588-098-2125-M	0.588	14.94	0.098	2.49	2.125	53.98	1.487	37.76	1.443	36.65	59.84	266.20	93.75	16.41	**C0588-098-2125-S**	1.554	39.46	46.58	207.21	81.53	14.27
C0588-098-2250-M	0.588	14.94	0.098	2.49	2.250	57.15	1.570	39.89	1.523	38.68	59.84	266.20	88.05	15.41	**C0588-098-2250-S**	1.642	41.70	46.58	207.21	76.56	13.40
C0588-098-2375-M	0.588	14.94	0.098	2.49	2.375	60.33	1.654	42.01	1.603	40.72	59.84	266.20	83.00	14.52	**C0588-098-2375-S**	1.730	43.93	46.58	207.21	72.17	12.63
C0588-098-2500-M	0.588	14.94	0.098	2.49	2.500	63.50	1.738	44.14	1.683	42.75	59.84	266.20	78.49	13.74	**C0588-098-2500-S**	1.818	46.17	46.58	207.21	68.26	11.94
C0588-098-2625-M	0.588	14.94	0.098	2.49	2.625	66.68	1.821	46.26	1.763	44.79	59.84	266.20	74.46	13.03	**C0588-098-2625-S**	1.905	48.40	46.58	207.21	64.74	11.33
C0588-098-2750-M	0.588	14.94	0.098	2.49	2.750	69.85	1.905	48.38	1.844	46.83	59.84	266.20	70.81	12.39	**C0588-098-2750-S**	1.993	50.63	46.58	207.21	61.57	10.78
C0588-098-2875-M	0.588	14.94	0.098	2.49	2.875	73.03	1.989	50.51	1.924	48.86	59.84	266.20	67.51	11.81	**C0588-098-2875-S**	2.081	52.87	46.58	207.21	58.70	10.27
C0588-098-3000-M	0.588	14.94	0.098	2.49	3.000	76.20	2.072	52.63	2.004	50.90	59.84	266.20	64.50	11.29	**C0588-098-3000-S**	2.169	55.10	46.58	207.21	56.09	9.81
C0588-098-3250-M	0.588	14.94	0.098	2.49	3.250	82.55	2.239	56.88	2.164	54.97	59.84	266.20	59.22	10.36	**C0588-098-3250-S**	2.345	59.57	46.58	207.21	51.49	9.01
C0588-098-3500-M	0.588	14.94	0.098	2.49	3.500	88.90	2.407	61.13	2.324	59.04	59.84	266.20	54.74	9.58	**C0588-098-3500-S**	2.521	64.04	46.58	207.21	47.60	8.33
C0588-098-3750-M	0.588	14.94	0.098	2.49	3.750	95.25	2.574	65.38	2.485	63.11	59.84	266.20	50.89	8.91	**C0588-098-3750-S**	2.697	68.51	46.58	207.21	44.25	7.74
C0588-098-4000-M	0.588	14.94	0.098	2.49	4.000	101.60	2.741	69.63	2.645	67.18	59.84	266.20	47.54	8.32	**C0588-098-4000-S**	2.873	72.98	46.58	207.21	41.34	7.23
C0588-098-4250-M	0.588	14.94	0.098	2.49	4.250	107.95	2.909	73.88	2.805	71.26	59.84	266.20	44.61	7.81	**C0588-098-4250-S**	3.049	77.45	46.58	207.21	38.79	6.79
C0588-098-4500-M	0.588	14.94	0.098	2.49	4.500	114.30	3.076	78.13	2.966	75.33	59.84	266.20	42.02	7.35	**C0588-098-4500-S**	3.225	81.92	46.58	207.21	36.54	6.39
C0588-098-4750-M	0.588	14.94	0.098	2.49	4.750	120.65	3.243	82.37	3.126	79.40	59.84	266.20	39.71	6.95	**C0588-098-4750-S**	3.401	86.39	46.58	207.21	34.53	6.04
C0588-098-5000-M	0.588	14.94	0.098	2.49	5.000	127.00	3.410	86.62	3.286	83.47	59.84	266.20	37.65	6.59	**C0588-098-5000-S**	3.577	90.86	46.58	207.21	32.74	5.73
C0588-098-5250-M	0.588	14.94	0.098	2.49	5.250	133.35	3.578	90.87	3.447	87.54	59.84	266.20	35.78	6.26	**C0588-098-5250-S**	3.753	95.32	46.58	207.21	31.12	5.45
C0588-098-5500-M	0.588	14.94	0.098	2.49	5.500	139.70	3.745	95.12	3.607	91.62	59.84	266.20	34.10	5.97	**C0588-098-5500-S**	3.929	99.79	46.58	207.21	29.65	5.19
C0588-098-5750-M	0.588	14.94	0.098	2.49	5.750	146.05	3.912	99.37	3.767	95.69	59.84	266.20	32.56	5.70	**C0588-098-5750-S**	4.105	104.26	46.58	207.21	28.32	4.96
C0588-098-6000-M	0.588	14.94	0.098	2.49	6.000	152.40	4.079	103.62	3.928	99.76	59.84	266.20	31.16	5.45	**C0588-098-6000-S**	4.281	108.73	46.58	207.21	27.10	4.74
C0588-098-6250-M	0.588	14.94	0.098	2.49	6.250	158.75	4.247	107.87	4.088	103.83	59.84	266.20	29.87	5.23	**C0588-098-6250-S**	4.457	113.20	46.58	207.21	25.98	4.55
C0588-098-6500-M	0.588	14.94	0.098	2.49	6.500	165.10	4.414	112.12	4.248	107.90	59.84	266.20	28.69	5.02	**C0588-098-6500-S**	4.633	117.67	46.58	207.21	24.95	4.37
C0588-098-6750-M	0.588	14.94	0.098	2.49	6.750	171.45	4.581	116.36	4.408	111.98	59.84	266.20	27.59	4.83	**C0588-098-6750-S**	4.809	122.14	46.58	207.21	24.00	4.20
C0588-098-7000-M	0.588	14.94	0.098	2.49	7.000	177.80	4.749	120.61	4.569	116.05	59.84	266.20	26.58	4.65	**C0588-098-7000-S**	4.985	126.61	46.58	207.21	23.11	4.04
C0588-098-7500-M	0.588	14.94	0.098	2.49	7.500	190.50	5.083	129.11	4.889	124.19	59.84	266.20	24.76	4.33	**C0588-098-7500-S**	5.336	135.55	46.58	207.21	21.53	3.77
C0588-098-8000-M	0.588	14.94	0.098	2.49	8.000	203.20	5.418	137.61	5.210	132.33	59.84	266.20	23.17	4.06	**C0588-098-8000-S**	5.688	144.48	46.58	207.21	20.15	3.53
C0588-098-8500-M	0.588	14.94	0.098	2.49	8.500	215.90	5.752	146.11	5.531	140.48	59.84	266.20	21.78	3.81	**C0588-098-8500-S**	6.040	153.42	46.58	207.21	18.94	3.31
C0588-098-9000-M	0.588	14.94	0.098	2.49	9.000	228.60	6.087	154.60	5.851	148.62	59.84	266.20	20.54	3.59	**C0588-098-9000-S**	6.392	162.36	46.58	207.21	17.86	3.13
C0588-098-9500-M	0.588	14.94	0.098	2.49	9.500	241.30	6.421	163.10	6.172	156.77	59.84	266.20	19.44	3.40	**C0588-098-9500-S**	6.744	171.30	46.58	207.21	16.90	2.96
C0588-105-0875-M	0.588	14.94	0.105	2.67	0.875	22.23	0.681	17.31	0.680	17.26	72.05	320.48	372.30	65.15	**C0588-105-0875-S**	0.703	17.85	55.82	248.28	323.74	56.66
C0588-105-0938-M	0.588	14.94	0.105	2.67	0.938	23.81	0.726	18.44	0.723	18.36	72.05	320.48	340.32	59.56	**C0588-105-0938-S**	0.749	19.02	55.82	248.28	295.93	51.79
C0588-105-1000-M	0.588	14.94	0.105	2.67	1.000	25.40	0.770	19.56	0.766	19.46	72.05	320.48	313.40	54.84	**C0588-105-1000-S**	0.795	20.20	55.82	248.28	272.52	47.69
C0588-105-1125-M	0.588	14.94	0.105	2.67	1.125	28.58	0.859	21.81	0.852	21.65	72.05	320.48	270.58	47.35	**C0588-105-1125-S**	0.888	22.55	55.82	248.28	235.29	41.18
C0588-105-1250-M	0.588	14.94	0.105	2.67	1.250	31.75	0.947	24.06	0.939	23.84	72.05	320.48	238.06	41.66	**C0588-105-1250-S**	0.980	24.90	55.82	248.28	207.01	36.23
C0588-105-1375-M	0.588	14.94	0.105	2.67	1.375	34.93	1.036	26.31	1.025	26.03	72.05	320.48	212.52	37.19	**C0588-105-1375-S**	1.073	27.25	55.82	248.28	184.80	32.34
C0588-105-1500-M	0.588	14.94	0.105	2.67	1.500	38.10	1.125	28.57	1.111	28.23	72.05	320.48	191.92	33.59	**C0588-105-1500-S**	1.166	29.61	55.82	248.28	166.89	29.21
C0588-105-1625-M	0.588	14.94	0.105	2.67	1.625	41.28	1.213	30.82	1.198	30.42	72.05	320.48	174.97	30.62	**C0588-105-1625-S**	1.258	31.96	55.82	248.28	152.15	26.63
C0588-105-1750-M	0.588	14.94	0.105	2.67	1.750	44.45	1.302	33.07	1.284	32.61	72.05	320.48	160.77	28.13	**C0588-105-1750-S**	1.351	34.31	55.82	248.28	139.80	24.46
C0588-105-1875-M	0.588	14.94	0.105	2.67	1.875	47.63	1.390	35.32	1.370	34.80	72.05	320.48	148.70	26.02	**C0588-105-1875-S**	1.443	36.66	55.82	248.28	129.30	22.63
C0588-105-2000-M	0.588	14.94	0.105	2.67	2.000	50.80	1.479	37.57	1.457	37.00	72.05	320.48	138.31	24.20	**C0588-105-2000-S**	1.536	39.01	55.82	248.28	120.27	21.05
C0588-105-2125-M	0.588	14.94	0.105	2.67	2.125	53.98	1.568	39.82	1.543	39.19	72.05	320.48	129.29	22.63	**C0588-105-2125-S**	1.629	41.36	55.82	248.28	112.42	19.67
C0588-105-2250-M	0.588	14.94	0.105	2.67	2.250	57.15	1.656	42.07	1.629	41.38	72.05	320.48	121.36	21.24	**C0588-105-2250-S**	1.721	43.72	55.82	248.28	105.53	18.47
C0588-105-2375-M	0.588	14.94	0.105	2.67	2.375	60.33	1.745	44.32	1.715	43.57	72.05	320.48	114.36	20.01	**C0588-105-2375-S**	1.814	46.07	55.82	248.28	99.44	17.40
C0588-105-2500-M	0.588	14.94	0.105	2.67	2.500	63.50	1.834	46.57	1.802	45.77	72.05	320.48	108.12	18.92	**C0588-105-2500-S**	1.906	48.42	55.82	248.28	94.01	16.45
C0588-105-2625-M	0.588	14.94	0.105	2.67	2.625	66.68	1.922	48.82	1.888	47.96	72.05	320.48	102.52	17.94	**C0588-105-2625-S**	1.999	50.77	55.82	248.28	89.15	15.60
C0588-105-2750-M	0.588	14.94	0.105	2.67	2.750	69.85	2.011	51.08	1.974	50.15	72.05	320.48	97.47	17.06	**C0588-105-2750-S**	2.091	53.12	55.82	248.28	84.76	14.83
C0588-105-2875-M	0.588	14.94	0.105	2.67	2.875	73.03	2.099	53.33	2.061	52.34	72.05	320.48	92.90	16.26	**C0588-105-2875-S**	2.184	55.48	55.82	248.28	80.78	14.14
C0588-105-3000-M	0.588	14.94	0.105	2.67	3.000	76.20	2.188	55.58	2.147	54.54	72.05	320.48	88.74	15.53	**C0588-105-3000-S**	2.277	57.83	55.82	248.28	77.17	13.50
C0588-105-3250-M	0.588	14.94	0.105	2.67	3.250	82.55	2.365	60.08	2.320	58.92	72.05	320.48	81.44	14.25	**C0588-105-3250-S**	2.462	62.53	55.82	248.28	70.82	12.39
C0588-105-3500-M	0.588	14.94	0.105	2.67	3.500	88.90	2.543	64.58	2.492	63.31	72.05	320.48	75.25	13.17	**C0588-105-3500-S**	2.647	67.23	55.82	248.28	65.44	11.45
C0588-105-3750-M	0.588	14.94	0.105	2.67	3.750	95.25	2.720	69.08	2.665	67.69	72.05	320.48	69.94	12.24	**C0588-105-3750-S**	2.832	71.94	55.82	248.28	60.82	10.64
C0588-105-4000-M	0.588	14.94	0.105	2.67	4.000	101.60	2.897	73.59	2.838	72.08	72.05	320.48	65.33	11.43	**C0588-105-4000-S**	3.017	76.64	55.82	248.28	56.81	9.94
C0588-105-4250-M	0.588	14.94	0.105	2.67	4.250	107.95	3.074	78.09	3.010	76.46	72.05	320.48	61.28	10.72	**C0588-105-4250-S**	3.203	81.35	55.82	248.28	53.29	9.33
C0588-105-4500-M	0.588	14.94	0.105	2.67	4.500	114.30	3.252	82.59	3.183	80.84	72.05	320.48	57.71	10.10	**C0588-105-4500-S**	3.388	86.05	55.82	248.28	50.18	8.78

Part Numbers with an "*" are squared and not ground. **Part Numbers in bold** represent the newly expanded Associated Spring RAYMOND compression spring offering.

MUSIC WIRE															STAINLESS STEEL						
Catalog #	Outside Diameter (OD)		Wire Diameter (d)		Free Length (L) Approx		Load Length (L_1)		Solid Height (Sh) Approx		Load (P) at L_1		Spring Rate (R)		Catalog #	Load Length (L_1)		Load (P) at L_1		Spring Rate (R)	
	in	mm	in	mm	in	mm	in	mm	in	mm	lb	N	lb/in	N/mm		in	mm	lb	N	lb/in	N/mm
C0588-105-4750-M	**0.588**	**14.94**	**0.105**	**2.67**	**4.750**	**120.65**	**3.429**	**87.09**	**3.356**	**85.23**	**72.05**	**320.48**	**54.53**	**9.54**	**C0588-105-4750-S**	**3.573**	**90.75**	**55.82**	**248.28**	**47.42**	**8.30**
C0588-105-5000-M	**0.588**	**14.94**	**0.105**	**2.67**	**5.000**	**127.00**	**3.606**	**91.60**	**3.528**	**89.61**	**72.05**	**320.48**	**51.69**	**9.05**	**C0588-105-5000-S**	**3.758**	**95.46**	**55.82**	**248.28**	**44.95**	**7.87**
C0588-105-5250-M	**0.588**	**14.94**	**0.105**	**2.67**	**5.250**	**133.35**	**3.783**	**96.10**	**3.701**	**94.00**	**72.05**	**320.48**	**49.12**	**8.60**	**C0588-105-5250-S**	**3.943**	**100.16**	**55.82**	**248.28**	**42.72**	**7.48**
C0588-105-5500-M	**0.588**	**14.94**	**0.105**	**2.67**	**5.500**	**139.70**	**3.961**	**100.60**	**3.873**	**98.38**	**72.05**	**320.48**	**46.80**	**8.19**	**C0588-105-5500-S**	**4.129**	**104.86**	**55.82**	**248.28**	**40.70**	**7.12**
C0588-105-5750-M	**0.588**	**14.94**	**0.105**	**2.67**	**5.750**	**146.05**	**4.138**	**105.10**	**4.046**	**102.77**	**72.05**	**320.48**	**44.69**	**7.82**	**C0588-105-5750-S**	**4.314**	**109.57**	**55.82**	**248.28**	**38.86**	**6.80**
C0588-105-6000-M	**0.588**	**14.94**	**0.105**	**2.67**	**6.000**	**152.40**	**4.315**	**109.60**	**4.219**	**107.15**	**72.05**	**320.48**	**42.76**	**7.48**	**C0588-105-6000-S**	**4.499**	**114.27**	**55.82**	**248.28**	**37.18**	**6.51**
C0588-105-6250-M	**0.588**	**14.94**	**0.105**	**2.67**	**6.250**	**158.75**	**4.492**	**114.11**	**4.391**	**111.54**	**72.05**	**320.48**	**40.99**	**7.17**	**C0588-105-6250-S**	**4.684**	**118.98**	**55.82**	**248.28**	**35.64**	**6.24**
C0588-105-6500-M	**0.588**	**14.94**	**0.105**	**2.67**	**6.500**	**165.10**	**4.670**	**118.61**	**4.564**	**115.92**	**72.05**	**320.48**	**39.36**	**6.89**	**C0588-105-6500-S**	**4.869**	**123.68**	**55.82**	**248.28**	**34.23**	**5.99**
C0588-105-6750-M	**0.588**	**14.94**	**0.105**	**2.67**	**6.750**	**171.45**	**4.847**	**123.11**	**4.737**	**120.31**	**72.05**	**320.48**	**37.86**	**6.62**	**C0588-105-6750-S**	**5.054**	**128.38**	**55.82**	**248.28**	**32.92**	**5.76**
C0588-105-7000-M	**0.588**	**14.94**	**0.105**	**2.67**	**7.000**	**177.80**	**5.024**	**127.61**	**4.909**	**124.69**	**72.05**	**320.48**	**36.46**	**6.38**	**C0588-105-7000-S**	**5.240**	**133.09**	**55.82**	**248.28**	**31.71**	**5.55**
C0588-105-7500-M	**0.588**	**14.94**	**0.105**	**2.67**	**7.500**	**190.50**	**5.379**	**136.62**	**5.254**	**133.46**	**72.05**	**320.48**	**33.96**	**5.94**	**C0588-105-7500-S**	**5.610**	**142.49**	**55.82**	**248.28**	**29.53**	**5.17**
C0588-105-8000-M	**0.588**	**14.94**	**0.105**	**2.67**	**8.000**	**203.20**	**5.733**	**145.62**	**5.600**	**142.23**	**72.05**	**320.48**	**31.78**	**5.56**	**C0588-105-8000-S**	**5.980**	**151.90**	**55.82**	**248.28**	**27.64**	**4.84**
C0588-105-8500-M	**0.588**	**14.94**	**0.105**	**2.67**	**8.500**	**215.90**	**6.088**	**154.63**	**5.945**	**151.00**	**72.05**	**320.48**	**29.87**	**5.23**	**C0588-105-8500-S**	**6.351**	**161.31**	**55.82**	**248.28**	**25.97**	**4.54**
C0588-105-9000-M	**0.588**	**14.94**	**0.105**	**2.67**	**9.000**	**228.60**	**6.442**	**163.63**	**6.290**	**159.77**	**72.05**	**320.48**	**28.17**	**4.93**	**C0588-105-9000-S**	**6.721**	**170.72**	**55.82**	**248.28**	**24.49**	**4.29**
C0588-105-9500-M	**0.588**	**14.94**	**0.105**	**2.67**	**9.500**	**241.30**	**6.797**	**172.63**	**6.636**	**168.54**	**72.05**	**320.48**	**26.65**	**4.66**	**C0588-105-9500-S**	**7.091**	**180.12**	**55.82**	**248.28**	**23.17**	**4.06**
C0588-112-0875-M	**0.588**	**14.94**	**0.112**	**2.85**	**0.875**	**22.23**	**0.738**	**18.74**	**0.714**	**18.13**	**70.71**	**314.52**	**515.51**	**90.21**	**C0588-112-0875-S**	**0.728**	**18.49**	**65.99**	**293.53**	**448.27**	**78.45**
C0588-112-0938-M	**0.588**	**14.94**	**0.112**	**2.85**	**0.938**	**23.81**	**0.786**	**19.97**	**0.760**	**19.29**	**71.14**	**316.43**	**470.36**	**82.31**	**C0588-112-0938-S**	**0.776**	**19.71**	**65.99**	**293.53**	**409.01**	**71.58**
C0588-112-1000-M	**0.588**	**14.94**	**0.112**	**2.85**	**1.000**	**25.40**	**0.835**	**21.20**	**0.806**	**20.46**	**71.50**	**318.04**	**432.47**	**75.68**	**C0588-112-1000-S**	**0.825**	**20.94**	**65.99**	**293.53**	**376.06**	**65.81**
C0588-112-1125-M	**0.588**	**14.94**	**0.112**	**2.85**	**1.125**	**28.58**	**0.932**	**23.66**	**0.897**	**22.79**	**72.07**	**320.58**	**372.48**	**65.18**	**C0588-112-1125-S**	**0.921**	**23.40**	**65.99**	**293.53**	**323.89**	**56.68**
C0588-112-1250-M	**0.588**	**14.94**	**0.112**	**2.85**	**1.250**	**31.75**	**1.028**	**26.12**	**0.989**	**25.13**	**72.50**	**322.50**	**327.10**	**57.24**	**C0588-112-1250-S**	**1.018**	**25.86**	**65.99**	**293.53**	**284.43**	**49.78**
C0588-112-1375-M	**0.588**	**14.94**	**0.112**	**2.85**	**1.375**	**34.93**	**1.081**	**27.47**	**1.081**	**27.46**	**85.60**	**380.76**	**291.57**	**51.03**	**C0588-112-1375-S**	**1.115**	**28.31**	**65.99**	**293.53**	**253.54**	**44.37**
C0588-112-1500-M	**0.588**	**14.94**	**0.112**	**2.85**	**1.500**	**38.10**	**1.175**	**29.83**	**1.173**	**29.79**	**85.60**	**380.76**	**263.01**	**46.03**	**C0588-112-1500-S**	**1.211**	**30.77**	**65.99**	**293.53**	**228.70**	**40.02**
C0588-112-1625-M	**0.588**	**14.94**	**0.112**	**2.85**	**1.625**	**41.28**	**1.268**	**32.20**	**1.265**	**32.13**	**85.60**	**380.76**	**239.54**	**41.92**	**C0588-112-1625-S**	**1.308**	**33.23**	**65.99**	**293.53**	**208.30**	**36.45**
C0588-112-1750-M	**0.588**	**14.94**	**0.112**	**2.85**	**1.750**	**44.45**	**1.361**	**34.56**	**1.357**	**34.46**	**85.60**	**380.76**	**219.92**	**38.49**	**C0588-112-1750-S**	**1.405**	**35.69**	**65.99**	**293.53**	**191.24**	**33.47**
C0588-112-1875-M	**0.588**	**14.94**	**0.112**	**2.85**	**1.875**	**47.63**	**1.454**	**36.93**	**1.449**	**36.79**	**85.60**	**380.76**	**203.27**	**35.57**	**C0588-112-1875-S**	**1.502**	**38.14**	**65.99**	**293.53**	**176.76**	**30.93**
C0588-112-2000-M	**0.588**	**14.94**	**0.112**	**2.85**	**2.000**	**50.80**	**1.547**	**39.29**	**1.540**	**39.13**	**85.60**	**380.76**	**188.96**	**33.07**	**C0588-112-2000-S**	**1.598**	**40.60**	**65.99**	**293.53**	**164.32**	**28.76**
C0588-112-2125-M	**0.588**	**14.94**	**0.112**	**2.85**	**2.125**	**53.98**	**1.640**	**41.66**	**1.632**	**41.46**	**85.60**	**380.76**	**176.54**	**30.89**	**C0588-112-2125-S**	**1.695**	**43.06**	**65.99**	**293.53**	**153.51**	**26.86**
C0588-112-2250-M	**0.588**	**14.94**	**0.112**	**2.85**	**2.250**	**57.15**	**1.733**	**44.02**	**1.724**	**43.79**	**85.60**	**380.76**	**165.65**	**28.99**	**C0588-112-2250-S**	**1.792**	**45.51**	**65.99**	**293.53**	**144.04**	**25.21**
C0588-112-2375-M	**0.588**	**14.94**	**0.112**	**2.85**	**2.375**	**60.33**	**1.826**	**46.39**	**1.816**	**46.13**	**85.60**	**380.76**	**156.02**	**27.30**	**C0588-112-2375-S**	**1.889**	**47.97**	**65.99**	**293.53**	**135.67**	**23.74**
C0588-112-2500-M	**0.588**	**14.94**	**0.112**	**2.85**	**2.500**	**63.50**	**1.919**	**48.75**	**1.908**	**48.46**	**85.60**	**380.76**	**147.45**	**25.80**	**C0588-112-2500-S**	**1.985**	**50.43**	**65.99**	**293.53**	**128.22**	**22.44**
C0588-112-2625-M	**0.588**	**14.94**	**0.112**	**2.85**	**2.625**	**66.68**	**2.013**	**51.12**	**2.000**	**50.79**	**85.60**	**380.76**	**139.78**	**24.46**	**C0588-112-2625-S**	**2.082**	**52.88**	**65.99**	**293.53**	**121.54**	**21.27**
C0588-112-2750-M	**0.588**	**14.94**	**0.112**	**2.85**	**2.750**	**69.85**	**2.106**	**53.49**	**2.092**	**53.13**	**85.60**	**380.76**	**132.86**	**23.25**	**C0588-112-2750-S**	**2.179**	**55.34**	**65.99**	**293.53**	**115.53**	**20.22**
C0588-112-2875-M	**0.588**	**14.94**	**0.112**	**2.85**	**2.875**	**73.03**	**2.199**	**55.85**	**2.183**	**55.46**	**85.60**	**380.76**	**126.59**	**22.15**	**C0588-112-2875-S**	**2.276**	**57.80**	**65.99**	**293.53**	**110.08**	**19.26**
C0588-112-3000-M	**0.588**	**14.94**	**0.112**	**2.85**	**3.000**	**76.20**	**2.292**	**58.22**	**2.275**	**57.79**	**85.60**	**380.76**	**120.89**	**21.16**	**C0588-112-3000-S**	**2.372**	**60.26**	**65.99**	**293.53**	**105.13**	**18.40**
C0588-112-3250-M	**0.588**	**14.94**	**0.112**	**2.85**	**3.250**	**82.55**	**2.478**	**62.95**	**2.459**	**62.46**	**85.60**	**380.76**	**110.91**	**19.41**	**C0588-112-3250-S**	**2.566**	**65.17**	**65.99**	**293.53**	**96.44**	**16.88**
C0588-112-3500-M	**0.588**	**14.94**	**0.112**	**2.85**	**3.500**	**88.90**	**2.664**	**67.68**	**2.643**	**67.13**	**85.60**	**380.76**	**102.44**	**17.93**	**C0588-112-3500-S**	**2.759**	**70.08**	**65.99**	**293.53**	**89.08**	**15.59**
C0588-112-3750-M	**0.588**	**14.94**	**0.112**	**2.85**	**3.750**	**95.25**	**2.851**	**72.41**	**2.827**	**71.79**	**85.60**	**380.76**	**95.18**	**16.66**	**C0588-112-3750-S**	**2.953**	**75.00**	**65.99**	**293.53**	**82.76**	**14.48**
C0588-112-4000-M	**0.588**	**14.94**	**0.112**	**2.85**	**4.000**	**101.60**	**3.037**	**77.14**	**3.010**	**76.46**	**85.60**	**380.76**	**88.88**	**15.55**	**C0588-112-4000-S**	**3.146**	**79.91**	**65.99**	**293.53**	**77.28**	**13.52**
C0588-112-4250-M	**0.588**	**14.94**	**0.112**	**2.85**	**4.250**	**107.95**	**3.223**	**81.87**	**3.194**	**81.13**	**85.60**	**380.76**	**83.36**	**14.59**	**C0588-112-4250-S**	**3.340**	**84.83**	**65.99**	**293.53**	**72.49**	**12.68**
C0588-112-4500-M	**0.588**	**14.94**	**0.112**	**2.85**	**4.500**	**114.30**	**3.409**	**86.60**	**3.378**	**85.79**	**85.60**	**380.76**	**78.49**	**13.73**	**C0588-112-4500-S**	**3.533**	**89.74**	**65.99**	**293.53**	**68.25**	**11.94**
C0588-112-4750-M	**0.588**	**14.94**	**0.112**	**2.85**	**4.750**	**120.65**	**3.596**	**91.33**	**3.561**	**90.46**	**85.60**	**380.76**	**74.15**	**12.98**	**C0588-112-4750-S**	**3.727**	**94.66**	**65.99**	**293.53**	**64.48**	**11.28**
C0588-112-5000-M	**0.588**	**14.94**	**0.112**	**2.85**	**5.000**	**127.00**	**3.782**	**96.06**	**3.745**	**95.13**	**85.60**	**380.76**	**70.27**	**12.30**	**C0588-112-5000-S**	**3.920**	**99.57**	**65.99**	**293.53**	**61.10**	**10.69**
C0588-112-5250-M	**0.588**	**14.94**	**0.112**	**2.85**	**5.250**	**133.35**	**3.968**	**100.79**	**3.929**	**99.80**	**85.60**	**380.76**	**66.77**	**11.69**	**C0588-112-5250-S**	**4.114**	**104.48**	**65.99**	**293.53**	**58.06**	**10.16**
C0588-112-5500-M	**0.588**	**14.94**	**0.112**	**2.85**	**5.500**	**139.70**	**4.154**	**105.52**	**4.113**	**104.46**	**85.60**	**380.76**	**63.61**	**11.13**	**C0588-112-5500-S**	**4.307**	**109.40**	**65.99**	**293.53**	**55.31**	**9.68**
C0588-112-5750-M	**0.588**	**14.94**	**0.112**	**2.85**	**5.750**	**146.05**	**4.341**	**110.25**	**4.296**	**109.13**	**85.60**	**380.76**	**60.73**	**10.63**	**C0588-112-5750-S**	**4.500**	**114.31**	**65.99**	**293.53**	**52.81**	**9.24**
C0588-112-6000-M	**0.588**	**14.94**	**0.112**	**2.85**	**6.000**	**152.40**	**4.527**	**114.98**	**4.480**	**113.80**	**85.60**	**380.76**	**58.10**	**10.17**	**C0588-112-6000-S**	**4.694**	**119.23**	**65.99**	**293.53**	**50.52**	**8.84**
C0588-112-6250-M	**0.588**	**14.94**	**0.112**	**2.85**	**6.250**	**158.75**	**4.713**	**119.71**	**4.664**	**118.46**	**85.60**	**380.76**	**55.69**	**9.75**	**C0588-112-6250-S**	**4.887**	**124.14**	**65.99**	**293.53**	**48.43**	**8.47**
C0588-112-6500-M	**0.588**	**14.94**	**0.112**	**2.85**	**6.500**	**165.10**	**4.899**	**124.44**	**4.848**	**123.13**	**85.60**	**380.76**	**53.47**	**9.36**	**C0588-112-6500-S**	**5.081**	**129.05**	**65.99**	**293.53**	**46.50**	**8.14**
C0588-112-6750-M	**0.588**	**14.94**	**0.112**	**2.85**	**6.750**	**171.45**	**5.085**	**129.17**	**5.031**	**127.80**	**85.60**	**380.76**	**51.43**	**9.00**	**C0588-112-6750-S**	**5.274**	**133.97**	**65.99**	**293.53**	**44.72**	**7.83**
C0588-112-7000-M	**0.588**	**14.94**	**0.112**	**2.85**	**7.000**	**177.80**	**5.272**	**133.90**	**5.215**	**132.46**	**85.60**	**380.76**	**49.53**	**8.67**	**C0588-112-7000-S**	**5.468**	**138.88**	**65.99**	**293.53**	**43.07**	**7.54**
C0588-112-7500-M	**0.588**	**14.94**	**0.112**	**2.85**	**7.500**	**190.50**	**5.644**	**143.36**	**5.583**	**141.80**	**85.60**	**380.76**	**46.12**	**8.07**	**C0588-112-7500-S**	**5.855**	**148.71**	**65.99**	**293.53**	**40.11**	**7.02**
C0588-112-8000-M	**0.588**	**14.94**	**0.112**	**2.85**	**8.000**	**203.20**	**6.017**	**152.82**	**5.950**	**151.13**	**85.60**	**380.76**	**43.16**	**7.55**	**C0588-112-8000-S**	**6.242**	**158.54**	**65.99**	**293.53**	**37.53**	**6.57**
C0588-112-8500-M	**0.588**	**14.94**	**0.112**	**2.85**	**8.500**	**215.90**	**6.389**	**162.28**	**6.317**	**160.46**	**85.60**	**380.76**	**40.55**	**7.10**	**C0588-112-8500-S**	**6.629**	**168.37**	**65.99**	**293.53**	**35.26**	**6.17**
C0588-112-9000-M	**0.588**	**14.94**	**0.112**	**2.85**	**9.000**	**228.60**	**6.762**	**171.74**	**6.685**	**169.80**	**85.60**	**380.76**	**38.24**	**6.69**	**C0588-112-9000-S**	**7.016**	**178.20**	**65.99**	**293.53**	**33.25**	**5.82**
C0588-112-9500-M	**0.588**	**14.94**	**0.112**	**2.85**	**9.500**	**241.30**	**7.134**	**181.21**	**7.052**	**179.13**	**85.60**	**380.76**	**36.18**	**6.33**	**C0588-112-9500-S**	**7.402**	**188.02**	**65.99**	**293.53**	**31.46**	**5.51**
D12890	0.591	15.00	0.087	2.20	0.787	20.00	0.508	12.90	0.476	12.10	57.76	256.93	185.49	32.46	D22890	0.508	12.90	48.11	214.02	154.51	27.04
D12900	0.591	15.00	0.087	2.20	1.189	30.20	0.697	17.70	0.650	16.50	57.76	256.93	118.23	20.69	D22900	0.697	17.70	48.11	214.02	98.46	17.23
D12910	0.591	15.00	0.087	2.20	1.925	48.90	1.079	27.40	0.996	25.30	57.76	256.93	68.34	11.96	D22910	1.079	27.40	48.11	214.02	56.91	9.96
D12940	0.591	15.00	0.098	2.50	0.866	22.00	0.551	14.00	0.541	13.75	105.16	467.78	333.43	58.35	D22940	0.551	14.00	87.60	389.66	277.77	48.61
D12950	0.591	15.00	0.098	2.50	1.260	32.00	0.768	19.50	0.738	18.75	105.16	467.78	212.40	37.17	D22950	0.768	19.50	87.60	389.66	176.91	30.96
D12960	0.591	15.00	0.098	2.50	1.870	47.50	1.094	27.80	1.033	26.25	105.16	467.78	137.31	24.03	D22960	1.094	27.80	87.60	389.66	114.40	20.02
D12970	0.591	15.00	0.098	2.50	2.657	67.50	1.524	38.70	1.427	36.25	105.16	467.78	93.03	16.28	D22970	1.524	38.70	87.60	389.66	77.49	13.56
D12980	0.591	15.00	0.098	2.50	3.858	98.00	2.169	55.10	2.018	51.25	105.16	467.78	62.74	10.98	D22980	2.169	55.10	87.60	389.66	52.29	9.15
C0600-045-0500-M	0.600	15.24	0.045	1.14	0.500	12.70	0.257	6.53	0.153	3.89	6.00	26.69	24.70	4.32	C0600-045-0500-S	0.257	6.53	5.00	22.23	20.58	3.60

FOR INFORMATION ON ALTERNATIVE FINISHES, SEE PAGE 311

Part Numbers with an "*" are squared and not ground. **Part Numbers in bold** represent the newly expanded Associated Spring RAYMOND compression spring offering.

MUSIC WIRE															STAINLESS STEEL						
Catalog #	Outside Diameter (OD)		Wire Diameter (d)		Free Length (L) Approx		Load Length (L_1)		Solid Height (Sh) Approx		Load (P) at L_1		Spring Rate (R)		Catalog #	Load Length (L_1)		Load (P) at L_1		Spring Rate (R)	
	in	mm	in	mm	in	mm	in	mm	in	mm	lb	N	lb/in	N/mm		in	mm	lb	N	lb/in	N/mm
C0600-045-0625-M	0.600	15.24	0.045	1.14	0.620	15.75	0.287	7.29	0.179	4.55	6.00	26.69	18.00	3.15	C0600-045-0625-S	0.287	7.29	5.00	22.23	14.99	2.62
C0600-045-0750-M	0.600	15.24	0.045	1.14	0.750	19.05	0.321	8.15	0.205	5.21	6.00	26.69	14.00	2.45	C0600-045-0750-S	0.321	8.15	5.00	22.23	11.66	2.04
C0600-045-0880-M	0.600	15.24	0.045	1.14	0.880	22.35	0.380	9.65	0.224	5.69	6.00	26.69	12.00	2.10	C0600-045-0880-S	0.380	9.65	5.00	22.23	10.00	1.75
C0600-045-1000-M	0.600	15.24	0.045	1.14	1.000	25.40	0.400	10.16	0.251	6.38	6.00	26.69	10.00	1.75	C0600-045-1000-S	0.400	10.16	5.00	22.23	8.33	1.46
C0600-045-1250-M	0.600	15.24	0.045	1.14	1.250	31.75	0.500	12.70	0.292	7.42	6.00	26.69	8.00	1.40	C0600-045-1250-S	0.500	12.70	5.00	22.23	6.66	1.17
C0600-045-1380-M	0.600	15.24	0.045	1.14	1.380	35.05	0.540	13.72	0.306	7.77	6.00	26.69	7.10	1.24	C0600-045-1380-S	0.540	13.72	5.00	22.23	5.91	1.03
C0600-045-1500-M	0.600	15.24	0.045	1.14	1.500	38.10	0.575	14.61	0.338	8.59	6.00	26.69	6.50	1.14	C0600-045-1500-S	0.575	14.61	5.00	22.23	5.42	0.95
C0600-045-1750-M	0.600	15.24	0.045	1.14	1.750	44.45	0.854	21.69	0.366	9.30	6.00	26.69	6.70	1.17	C0600-045-1750-S	0.854	21.69	5.00	22.23	5.58	0.98
C0600-045-2000-M	0.600	15.24	0.045	1.14	2.000	50.80	0.966	24.54	0.401	10.19	6.00	26.69	5.80	1.02	C0600-045-2000-S	0.966	24.54	5.00	22.23	4.83	0.85
C0600-045-2250-M	0.600	15.24	0.045	1.14	2.250	57.15	1.096	27.84	0.436	11.07	6.00	26.69	5.20	0.91	C0600-045-2250-S	1.096	27.84	5.00	22.23	4.33	0.76
C0600-045-2500-M	0.600	15.24	0.045	1.14	2.500	63.50	1.196	30.38	0.471	11.96	6.00	26.69	4.60	0.81	C0600-045-2500-S	1.196	30.38	5.00	22.23	3.83	0.67
C0600-045-2750-M	0.600	15.24	0.045	1.14	2.750	69.85	1.170	29.72	0.540	13.72	6.00	26.69	3.80	0.67	C0600-045-2750-S	1.170	29.72	5.00	22.23	3.17	0.55
C0600-045-3000-M	0.600	15.24	0.045	1.14	3.000	76.20	1.272	32.31	0.585	14.86	6.00	26.69	3.50	0.61	C0600-045-3000-S	1.272	32.31	5.00	22.23	2.92	0.51
C0600-045-3500-M	0.600	15.24	0.045	1.14	3.500	88.90	1.500	38.10	0.659	16.74	6.00	26.69	3.00	0.53	C0600-045-3500-S	1.500	38.10	5.00	22.23	2.50	0.44
C0600-049-0620-M	0.600	15.24	0.049	1.25	0.620	15.75	0.320	8.13	0.234	5.94	8.40	37.37	28.00	4.90	C0600-049-0620-S	0.365	9.26	5.95	26.49	23.32	4.08
C0600-049-0750-M	0.600	15.24	0.049	1.25	0.750	19.05	0.375	9.53	0.255	6.48	8.40	37.37	22.40	3.92	C0600-049-0750-S	0.431	10.94	5.95	26.49	18.66	3.27
C0600-049-1000-M	0.600	15.24	0.049	1.25	1.000	25.40	0.481	12.22	0.297	7.54	8.40	37.37	16.20	2.84	C0600-049-1000-S	0.559	14.19	5.95	26.49	13.50	2.36
C0600-049-1250-M	0.600	15.24	0.049	1.25	1.250	31.75	0.587	14.91	0.338	8.59	8.40	37.37	12.70	2.22	C0600-049-1250-S	0.687	17.45	5.95	26.49	10.58	1.85
C0600-049-1500-M	0.600	15.24	0.049	1.25	1.500	38.10	0.693	17.60	0.380	9.65	8.40	37.37	10.40	1.82	C0600-049-1500-S	0.813	20.64	5.95	26.49	8.66	1.52
C0600-049-1750-M	0.600	15.24	0.049	1.25	1.750	44.45	0.800	20.32	0.422	10.72	8.40	37.37	8.80	1.54	C0600-049-1750-S	0.938	23.82	5.95	26.49	7.33	1.28
C0600-049-2000-M	0.600	15.24	0.049	1.25	2.000	50.80	0.906	23.01	0.463	11.76	8.40	37.37	7.70	1.35	C0600-049-2000-S	1.072	27.22	5.95	26.49	6.41	1.12
C0600-049-2250-M	0.600	15.24	0.049	1.25	2.250	57.15	1.012	25.70	0.505	12.83	8.40	37.37	6.80	1.19	C0600-049-2250-S	1.199	30.45	5.95	26.49	5.66	0.99
C0600-049-2500-M	0.600	15.24	0.049	1.25	2.500	63.50	1.118	28.40	0.546	13.87	8.40	37.37	6.10	1.07	C0600-049-2500-S	1.328	33.73	5.95	26.49	5.08	0.89
C0600-049-2750-M	0.600	15.24	0.049	1.25	2.750	69.85	1.224	31.09	0.588	14.94	8.40	37.37	5.50	0.96	C0600-049-2750-S	1.450	36.84	5.95	26.49	4.58	0.80
C0600-049-3000-M	0.600	15.24	0.049	1.25	3.000	76.20	1.330	33.78	0.629	15.98	8.40	37.37	5.00	0.88	C0600-049-3000-S	1.570	39.89	5.95	26.49	4.17	0.73
C0600-055-0625-M	0.600	15.24	0.055	1.40	0.620	15.75	0.320	8.13	0.226	5.74	12.00	53.38	40.00	7.00	C0600-055-0625-S	0.374	9.51	8.19	36.43	33.32	5.83
C0600-055-0750-M	0.600	15.24	0.055	1.40	0.750	19.05	0.385	9.78	0.251	6.38	12.00	53.38	33.00	5.78	C0600-055-0750-S	0.452	11.48	8.19	36.43	27.49	4.81
C0600-055-0880-M	0.600	15.24	0.055	1.40	0.880	22.35	0.450	11.43	0.276	7.01	12.00	53.38	28.00	4.90	C0600-055-0880-S	0.529	13.43	8.19	36.43	23.32	4.08
C0600-055-1000-M	0.600	15.24	0.055	1.40	1.000	25.40	0.500	12.70	0.304	7.72	12.00	53.38	24.00	4.20	C0600-055-1000-S	0.590	15.00	8.19	36.43	19.99	3.50
C0600-055-1250-M	0.600	15.24	0.055	1.40	1.250	31.75	0.580	14.73	0.369	9.37	12.00	53.38	18.00	3.15	C0600-055-1250-S	0.704	17.88	8.19	36.43	14.99	2.62
C0600-055-1500-M	0.600	15.24	0.055	1.40	1.500	38.10	0.700	17.78	0.420	10.67	12.00	53.38	15.00	2.63	C0600-055-1500-S	0.845	21.45	8.19	36.43	12.50	2.19
C0600-055-1750-M	0.600	15.24	0.055	1.40	1.750	44.45	0.827	21.01	0.509	12.93	12.00	53.38	13.00	2.28	C0600-055-1750-S	0.994	25.24	8.19	36.43	10.83	1.90
C0600-055-2000-M	0.600	15.24	0.055	1.40	2.000	50.80	0.938	23.83	0.562	14.27	12.00	53.38	11.30	1.98	C0600-055-2000-S	1.130	28.70	8.19	36.43	9.41	1.65
C0600-055-2250-M	0.600	15.24	0.055	1.40	2.250	57.15	1.050	26.67	0.614	15.60	12.00	53.38	10.00	1.75	C0600-055-2250-S	1.267	32.18	8.19	36.43	8.33	1.46
C0600-055-2500-M	0.600	15.24	0.055	1.40	2.500	63.50	1.152	29.26	0.667	16.94	12.00	53.38	8.90	1.56	C0600-055-2500-S	1.395	35.44	8.19	36.43	7.41	1.30
C0600-055-2750-M	0.600	15.24	0.055	1.40	2.750	69.85	1.311	33.30	0.701	17.81	12.00	53.38	8.30	1.45	C0600-055-2750-S	1.566	39.77	8.19	36.43	6.91	1.21
C0600-055-3000-M	0.600	15.24	0.055	1.40	3.000	76.20	1.424	36.17	0.752	19.10	12.00	53.38	7.60	1.33	C0600-055-3000-S	1.706	43.34	8.19	36.43	6.33	1.11
C0600-059-0620-M	0.600	15.24	0.059	1.50	0.620	15.75	0.357	9.07	0.298	7.57	14.13	62.85	53.70	9.40	C0600-059-0620-S	0.397	10.09	9.96	44.29	44.73	7.83
C0600-059-0750-M	0.600	15.24	0.059	1.50	0.750	19.05	0.419	10.64	0.329	8.36	14.13	62.85	42.70	7.47	C0600-059-0750-S	0.470	11.94	9.96	44.29	35.57	6.22
C0600-059-0880-M	0.600	15.24	0.059	1.50	0.880	22.35	0.481	12.22	0.360	9.14	14.13	62.85	35.40	6.20	C0600-059-0880-S	0.542	13.78	9.96	44.29	29.49	5.16
C0600-059-1000-M	0.600	15.24	0.059	1.50	1.000	25.40	0.538	13.67	0.389	9.88	14.13	62.85	30.60	5.36	C0600-059-1000-S	0.609	15.48	9.96	44.29	25.49	4.46
C0600-059-1250-M	0.600	15.24	0.059	1.50	1.250	31.75	0.657	16.69	0.449	11.40	14.13	62.85	23.80	4.17	C0600-059-1250-S	0.748	18.99	9.96	44.29	19.83	3.47
C0600-059-1500-M	0.600	15.24	0.059	1.50	1.500	38.10	0.776	19.71	0.510	12.95	14.13	62.85	19.50	3.41	C0600-059-1500-S	0.887	22.53	9.96	44.29	16.24	2.84
C0600-059-1750-M	0.600	15.24	0.059	1.50	1.750	44.45	0.895	22.73	0.570	14.48	14.13	62.85	16.50	2.89	C0600-059-1750-S	1.026	26.05	9.96	44.29	13.75	2.41
C0600-059-2000-M	0.600	15.24	0.059	1.50	2.000	50.80	1.014	25.76	0.630	16.00	14.13	62.85	14.30	2.50	C0600-059-2000-S	1.164	29.57	9.96	44.29	11.91	2.08
C0600-059-2250-M	0.600	15.24	0.059	1.50	2.250	57.15	1.133	28.78	0.690	17.53	14.13	62.85	12.60	2.21	C0600-059-2250-S	1.301	33.05	9.96	44.29	10.50	1.84
C0600-059-2500-M	0.600	15.24	0.059	1.50	2.500	63.50	1.252	31.80	0.750	19.05	14.13	62.85	11.30	1.98	C0600-059-2500-S	1.442	36.63	9.96	44.29	9.41	1.65
C0600-059-2750-M	0.600	15.24	0.059	1.50	2.750	69.85	1.371	34.82	0.811	20.60	14.13	62.85	10.20	1.79	C0600-059-2750-S	1.578	40.08	9.96	44.29	8.50	1.49
C0600-059-3000-M	0.600	15.24	0.059	1.50	3.000	76.20	1.490	37.85	0.871	22.12	14.13	62.85	9.40	1.65	C0600-059-3000-S	1.728	43.90	9.96	44.29	7.83	1.37
C0600-063-0625-M	0.600	15.24	0.063	1.60	0.620	15.75	0.330	8.38	0.280	7.11	18.00	80.07	62.00	10.85	C0600-063-0625-S	0.392	9.95	11.80	52.47	51.65	9.04
C0600-063-0750-M	0.600	15.24	0.063	1.60	0.750	19.05	0.400	10.16	0.314	7.98	18.00	80.07	51.00	8.93	C0600-063-0750-S	0.472	12.00	11.80	52.47	42.48	7.43
C0600-063-0880-M	0.600	15.24	0.063	1.60	0.880	22.35	0.471	11.96	0.343	8.71	18.00	80.07	44.00	7.70	C0600-063-0880-S	0.558	14.18	11.80	52.47	36.65	6.41
C0600-063-1000-M	0.600	15.24	0.063	1.60	1.000	25.40	0.525	13.34	0.378	9.60	18.00	80.07	38.00	6.65	C0600-063-1000-S	0.627	15.93	11.80	52.47	31.65	5.54
C0600-063-1250-M	0.600	15.24	0.063	1.60	1.250	31.75	0.670	17.02	0.435	11.05	18.00	80.07	31.00	5.43	C0600-063-1250-S	0.793	20.15	11.80	52.47	25.82	4.52
C0600-063-1500-M	0.600	15.24	0.063	1.60	1.500	38.10	0.750	19.05	0.526	13.36	18.00	80.07	24.00	4.20	C0600-063-1500-S	0.910	23.11	11.80	52.47	19.99	3.50
C0600-063-1750-M	0.600	15.24	0.063	1.60	1.750	44.45	0.885	22.48	0.632	16.05	18.00	80.07	20.80	3.64	C0600-063-1750-S	1.069	27.16	11.80	52.47	17.33	3.03
C0600-063-2000-M	0.600	15.24	0.063	1.60	2.000	50.80	1.000	25.40	0.700	17.78	18.00	80.07	18.00	3.15	C0600-063-2000-S	1.213	30.82	11.80	52.47	14.99	2.62
C0600-063-2250-M	0.600	15.24	0.063	1.60	2.250	57.15	1.118	28.40	0.768	19.51	18.00	80.07	15.90	2.78	C0600-063-2250-S	1.359	34.53	11.80	52.47	13.25	2.32
C0600-063-2500-M	0.600	15.24	0.063	1.60	2.500	63.50	1.232	31.29	0.836	21.23	18.00	80.07	14.20	2.49	C0600-063-2500-S	1.503	38.17	11.80	52.47	11.83	2.07
C0600-063-2750-M	0.600	15.24	0.063	1.60	2.750	69.85	1.433	36.40	0.863	21.92	18.00	80.07	13.70	2.40	C0600-063-2750-S	1.716	43.59	11.80	52.47	11.41	2.00
C0600-063-3000-M	0.600	15.24	0.063	1.60	3.000	76.20	1.558	39.57	0.927	23.55	18.00	80.07	12.50	2.19	C0600-063-3000-S	1.867	47.42	11.80	52.47	10.41	1.82
C0600-063-3500-M	0.600	15.24	0.063	1.60	3.500	88.90	1.807	45.90	1.055	26.80	18.00	80.07	10.60	1.86	C0600-063-3500-S	2.164	54.97	11.80	52.47	8.83	1.55
C0600-067-0625-M	0.600	15.24	0.067	1.70	0.620	15.75	0.360	9.14	0.300	7.62	21.00	93.41	80.00	14.00	C0600-067-0625-S	0.408	10.36	14.14	62.88	66.64	11.66
C0600-067-0750-M	0.600	15.24	0.067	1.70	0.750	19.05	0.430	10.92	0.336	8.53	21.00	93.41	66.00	11.55	C0600-067-0750-S	0.493	12.52	14.14	62.88	54.98	9.62

Part Numbers with an "*" are squared and not ground. **Part Numbers in bold** represent the newly expanded Associated Spring RAYMOND compression spring offering.

MUSIC WIRE															STAINLESS STEEL						
Catalog #	Outside Diameter (OD)		Wire Diameter (d)		Free Length (L) Approx		Load Length (L_1)		Solid Height (Sh) Approx		Load (P) at L_1		Spring Rate (R)		Catalog #	Load Length (L_1)		Load (P) at L_1		Spring Rate (R)	
	in	mm	in	mm	in	mm	in	mm	in	mm	lb	N	lb/in	N/mm		in	mm	lb	N	lb/in	N/mm
C0600-067-0880-M	0.600	15.24	0.067	1.70	0.880	22.35	0.460	11.68	0.401	10.19	21.00	93.41	50.00	8.75	C0600-067-0880-S	0.541	13.73	14.14	62.88	41.65	7.29
C0600-067-1000-M	0.600	15.24	0.067	1.70	1.000	25.40	0.530	13.46	0.430	10.92	21.00	93.41	45.00	7.88	C0600-067-1000-S	0.623	15.82	14.14	62.88	37.49	6.56
C0600-067-1250-M	0.600	15.24	0.067	1.70	1.250	31.75	0.665	16.89	0.505	12.83	21.00	93.41	36.00	6.30	C0600-067-1250-S	0.779	19.78	14.14	62.88	29.99	5.25
C0600-067-1500-M	0.600	15.24	0.067	1.70	1.500	38.10	0.780	19.81	0.594	15.09	21.00	93.41	29.00	5.08	C0600-067-1500-S	0.915	23.24	14.14	62.88	24.16	4.23
C0600-067-1750-M	0.600	15.24	0.067	1.70	1.750	44.45	0.830	21.08	0.715	18.16	21.00	93.41	23.00	4.03	C0600-067-1750-S	1.012	25.71	14.14	62.88	19.16	3.35
C0600-067-2000-M	0.600	15.24	0.067	1.70	2.000	50.80	1.067	27.10	0.771	19.58	21.00	93.41	22.50	3.94	C0600-067-2000-S	1.246	31.64	14.14	62.88	18.74	3.28
C0600-067-2250-M	0.600	15.24	0.067	1.70	2.250	57.15	1.189	30.20	0.847	21.51	21.00	93.41	19.80	3.47	C0600-067-2250-S	1.393	35.38	14.14	62.88	16.49	2.89
C0600-067-2500-M	0.600	15.24	0.067	1.70	2.500	63.50	1.314	33.38	0.923	23.44	21.00	93.41	17.70	3.10	C0600-067-2500-S	1.541	39.15	14.14	62.88	14.74	2.58
C0600-067-2750-M	0.600	15.24	0.067	1.70	2.750	69.85	1.496	38.00	0.966	24.54	21.00	93.41	16.70	2.92	C0600-067-2750-S	1.734	44.04	14.14	62.88	13.91	2.43
C0600-067-3000-M	0.600	15.24	0.067	1.70	3.000	76.20	1.626	41.30	1.040	26.42	21.00	93.41	15.30	2.68	C0600-067-3000-S	1.891	48.03	14.14	62.88	12.75	2.23
C0600-072-0620-M	0.600	15.24	0.072	1.83	0.620	15.75	0.410	10.41	0.381	9.68	24.00	106.76	114.50	20.04	C0600-072-0620-S	0.410	10.41	19.99	88.93	95.38	16.69
C0600-072-0750-M	0.600	15.24	0.072	1.83	0.750	19.05	0.445	11.30	0.396	10.06	24.00	106.76	78.00	13.65	C0600-072-0750-S	0.445	11.30	19.99	88.93	64.97	11.37
C0600-072-0880-M	0.600	15.24	0.072	1.83	0.880	22.35	0.527	13.39	0.433	11.00	24.00	106.76	68.00	11.90	C0600-072-0880-S	0.527	13.39	19.99	88.93	56.64	9.91
C0600-072-1000-M	0.600	15.24	0.072	1.83	1.000	25.40	0.565	14.35	0.502	12.75	24.00	106.76	55.00	9.63	C0600-072-1000-S	0.565	14.35	19.99	88.93	45.82	8.02
C0600-072-1250-M	0.600	15.24	0.072	1.83	1.250	31.75	0.717	18.21	0.581	14.76	24.00	106.76	45.00	7.88	C0600-072-1250-S	0.717	18.21	19.99	88.93	37.49	6.56
C0600-072-1500-M	0.600	15.24	0.072	1.83	1.500	38.10	0.830	21.08	0.691	17.55	24.00	106.76	36.00	6.30	C0600-072-1500-S	0.830	21.08	19.99	88.93	29.99	5.25
C0600-072-1750-M	0.600	15.24	0.072	1.83	1.750	44.45	0.950	24.13	0.801	20.35	24.00	106.76	30.00	5.25	C0600-072-1750-S	0.950	24.13	19.99	88.93	24.99	4.37
C0600-072-2000-M	0.600	15.24	0.072	1.83	2.000	50.80	1.140	28.96	0.848	21.54	24.00	106.76	28.00	4.90	C0600-072-2000-S	1.140	28.96	19.99	88.93	23.32	4.08
C0600-072-2250-M	0.600	15.24	0.072	1.83	2.250	57.15	1.323	33.60	0.946	24.03	24.00	106.76	25.90	4.53	C0600-072-2250-S	1.323	33.60	19.99	88.93	21.58	3.78
C0600-072-2500-M	0.600	15.24	0.072	1.83	2.500	63.50	1.461	37.11	1.033	26.24	24.00	106.76	23.10	4.04	C0600-072-2500-S	1.461	37.11	19.99	88.93	19.24	3.37
C0600-072-2750-M	0.600	15.24	0.072	1.83	2.750	69.85	1.601	40.67	1.119	28.42	24.00	106.76	20.90	3.66	C0600-072-2750-S	1.601	40.67	19.99	88.93	17.41	3.05
C0600-072-3000-M	0.600	15.24	0.072	1.83	3.000	76.20	1.742	44.25	1.206	30.63	24.00	106.76	19.10	3.34	C0600-072-3000-S	1.742	44.25	19.99	88.93	15.91	2.78
C0600-081-0620-M	0.600	15.24	0.081	2.06	0.620	15.75	0.466	11.84	0.412	10.46	32.69	145.41	212.60	37.21	C0600-081-0620-S	0.466	11.84	27.23	121.13	177.10	30.99
C0600-081-0750-M	0.600	15.24	0.081	2.06	0.750	19.05	0.553	14.05	0.459	11.66	32.69	145.41	165.60	28.98	C0600-081-0750-S	0.553	14.05	27.23	121.13	137.95	24.14
C0600-081-0880-M	0.600	15.24	0.081	2.06	0.880	22.35	0.639	16.23	0.507	12.88	32.69	145.41	135.60	23.73	C0600-081-0880-S	0.639	16.23	27.23	121.13	112.96	19.77
C0600-081-1000-M	0.600	15.24	0.081	2.06	1.000	25.40	0.719	18.26	0.552	14.02	32.69	145.41	116.20	20.34	C0600-081-1000-S	0.719	18.26	27.23	121.13	96.80	16.94
C0600-081-1250-M	0.600	15.24	0.081	2.06	1.250	31.75	0.885	22.48	0.644	16.36	32.69	145.41	89.50	15.66	C0600-081-1250-S	0.885	22.48	27.23	121.13	74.55	13.05
C0600-081-1500-M	0.600	15.24	0.081	2.06	1.500	38.10	1.051	26.70	0.736	18.69	32.69	145.41	72.80	12.74	C0600-081-1500-S	1.051	26.70	27.23	121.13	60.64	10.61
C0600-081-1750-M	0.600	15.24	0.081	2.06	1.750	44.45	1.217	30.91	0.828	21.03	32.69	145.41	61.30	10.73	C0600-081-1750-S	1.217	30.91	27.23	121.13	51.06	8.94
C0600-081-2000-M	0.600	15.24	0.081	2.06	2.000	50.80	1.383	35.13	0.920	23.37	32.69	145.41	53.00	9.28	C0600-081-2000-S	1.383	35.13	27.23	121.13	44.15	7.73
C0600-081-2250-M	0.600	15.24	0.081	2.06	2.250	57.15	1.549	39.34	1.012	25.70	32.69	145.41	46.60	8.16	C0600-081-2250-S	1.549	39.34	27.23	121.13	38.82	6.79
C0600-081-2500-M	0.600	15.24	0.081	2.06	2.500	63.50	1.715	43.56	1.104	28.04	32.69	145.41	41.70	7.30	C0600-081-2500-S	1.715	43.56	27.23	121.13	34.74	6.08
C0600-081-2750-M	0.600	15.24	0.081	2.06	2.750	69.85	1.881	47.78	1.196	30.38	32.69	145.41	37.60	6.58	C0600-081-2750-S	1.881	47.78	27.23	121.13	31.32	5.48
C0600-081-3000-M	0.600	15.24	0.081	2.06	3.000	76.20	2.047	51.99	1.288	32.72	32.69	145.41	34.30	6.00	C0600-081-3000-S	2.047	51.99	27.23	121.13	28.57	5.00
C0600-081-3250-M	0.600	15.24	0.081	2.06	3.250	82.55	2.213	56.21	1.380	35.05	32.69	145.41	31.50	5.51	C0600-081-3250-S	2.213	56.21	27.23	121.13	26.24	4.59
C0600-081-3500-M	0.600	15.24	0.081	2.06	3.500	88.90	2.379	60.43	1.472	37.39	32.69	145.41	29.20	5.11	C0600-081-3500-S	2.379	60.43	27.23	121.13	24.32	4.26
C0600-081-3750-M	0.600	15.24	0.081	2.06	3.750	95.25	2.545	64.64	1.564	39.73	32.69	145.41	27.10	4.74	C0600-081-3750-S	2.545	64.64	27.23	121.13	22.57	3.95
C0600-081-4000-M	0.600	15.24	0.081	2.06	4.000	101.60	2.711	68.86	1.656	42.06	32.69	145.41	25.40	4.45	C0600-081-4000-S	2.711	68.86	27.23	121.13	21.16	3.70
C0600-085-0620-M	0.600	15.24	0.085	2.16	0.620	15.75	0.477	12.12	0.433	11.00	37.62	167.34	262.50	45.94	C0600-085-0620-S	0.477	12.12	31.34	139.40	218.66	38.27
C0600-085-0750-M	0.600	15.24	0.085	2.16	0.750	19.05	0.565	14.35	0.484	12.29	37.62	167.34	203.60	35.63	C0600-085-0750-S	0.565	14.35	31.34	139.40	169.60	29.68
C0600-085-0880-M	0.600	15.24	0.085	2.16	0.880	22.35	0.654	16.61	0.536	13.61	37.62	167.34	166.40	29.12	C0600-085-0880-S	0.654	16.61	31.34	139.40	138.61	24.26
C0600-085-1000-M	0.600	15.24	0.085	2.16	1.000	25.40	0.736	18.69	0.583	14.81	37.62	167.34	142.30	24.90	C0600-085-1000-S	0.736	18.69	31.34	139.40	118.54	20.74
C0600-085-1250-M	0.600	15.24	0.085	2.16	1.250	31.75	0.906	23.01	0.682	17.32	37.62	167.34	109.40	19.15	C0600-085-1250-S	0.906	23.01	31.34	139.40	91.13	15.95
C0600-085-1500-M	0.600	15.24	0.085	2.16	1.500	38.10	1.076	27.33	0.781	19.84	37.62	167.34	88.80	15.54	C0600-085-1500-S	1.076	27.33	31.34	139.40	73.97	12.94
C0600-085-1750-M	0.600	15.24	0.085	2.16	1.750	44.45	1.247	31.67	0.880	22.35	37.62	167.34	74.80	13.09	C0600-085-1750-S	1.247	31.67	31.34	139.40	62.31	10.90
C0600-085-2000-M	0.600	15.24	0.085	2.16	2.000	50.80	1.417	35.99	0.978	24.84	37.62	167.34	64.50	11.29	C0600-085-2000-S	1.417	35.99	31.34	139.40	53.73	9.40
C0600-085-2250-M	0.600	15.24	0.085	2.16	2.250	57.15	1.588	40.34	1.077	27.36	37.62	167.34	56.80	9.94	C0600-085-2250-S	1.588	40.34	31.34	139.40	47.31	8.28
C0600-085-2500-M	0.600	15.24	0.085	2.16	2.500	63.50	1.758	44.65	1.176	29.87	37.62	167.34	50.70	8.87	C0600-085-2500-S	1.758	44.65	31.34	139.40	42.23	7.39
C0600-085-2750-M	0.600	15.24	0.085	2.16	2.750	69.85	1.928	48.97	1.275	32.39	37.62	167.34	45.80	8.02	C0600-085-2750-S	1.928	48.97	31.34	139.40	38.15	6.68
C0600-085-3000-M	0.600	15.24	0.085	2.16	3.000	76.20	2.099	53.31	1.374	34.90	37.62	167.34	41.70	7.30	C0600-085-3000-S	2.099	53.31	31.34	139.40	34.74	6.08
C0600-085-3250-M	0.600	15.24	0.085	2.16	3.250	82.55	2.269	57.63	1.473	37.41	37.62	167.34	38.30	6.70	C0600-085-3250-S	2.269	57.63	31.34	139.40	31.90	5.58
C0600-085-3500-M	0.600	15.24	0.085	2.16	3.500	88.90	2.439	61.95	1.572	39.93	37.62	167.34	35.50	6.21	C0600-085-3500-S	2.439	61.95	31.34	139.40	29.57	5.18
C0600-085-3750-M	0.600	15.24	0.085	2.16	3.750	95.25	2.610	66.29	1.670	42.42	37.62	167.34	33.00	5.78	C0600-085-3750-S	2.610	66.29	31.34	139.40	27.49	4.81
C0600-085-4000-M	0.600	15.24	0.085	2.16	4.000	101.60	2.780	70.61	1.769	44.93	37.62	167.34	30.80	5.39	C0600-085-4000-S	2.780	70.61	31.34	139.40	25.66	4.49
C0600-092-0750-M	0.600	15.24	0.092	2.34	0.750	19.05	0.591	15.01	0.524	13.31	46.46	206.66	291.50	51.01	C0600-092-0750-S	0.591	15.01	38.70	172.15	242.82	42.49
C0600-092-0880-M	0.600	15.24	0.092	2.34	0.880	22.35	0.684	17.37	0.581	14.76	46.46	206.66	237.00	41.48	C0600-092-0880-S	0.684	17.37	38.70	172.15	197.42	34.55
C0600-092-1000-M	0.600	15.24	0.092	2.34	1.000	25.40	0.770	19.56	0.633	16.08	46.46	206.66	202.20	35.39	C0600-092-1000-S	0.770	19.56	38.70	172.15	168.43	29.48
C0600-092-1250-M	0.600	15.24	0.092	2.34	1.250	31.75	0.950	24.13	0.743	18.87	46.46	206.66	154.70	27.07	C0600-092-1250-S	0.950	24.13	38.70	172.15	128.87	22.55
C0600-092-1500-M	0.600	15.24	0.092	2.34	1.500	38.10	1.129	28.68	0.853	21.67	46.46	206.66	125.40	21.95	C0600-092-1500-S	1.129	28.68	38.70	172.15	104.46	18.28
C0600-092-1750-M	0.600	15.24	0.092	2.34	1.750	44.45	1.309	33.25	0.962	24.43	46.46	206.66	105.30	18.43	C0600-092-1750-S	1.309	33.25	38.70	172.15	87.72	15.35
C0600-092-2000-M	0.600	15.24	0.092	2.34	2.000	50.80	1.488	37.80	1.072	27.23	46.46	206.66	90.80	15.89	C0600-092-2000-S	1.488	37.80	38.70	172.15	75.64	13.24
C0600-092-2250-M	0.600	15.24	0.092	2.34	2.250	57.15	1.668	42.37	1.181	30.00	46.46	206.66	79.80	13.97	C0600-092-2250-S	1.668	42.37	38.70	172.15	66.47	11.63
C0600-092-2500-M	0.600	15.24	0.092	2.34	2.500	63.50	1.848	46.94	1.291	32.79	46.46	206.66	71.20	12.46	C0600-092-2500-S	1.848	46.94	38.70	172.15	59.31	10.38
C0600-092-2750-M	0.600	15.24	0.092	2.34	2.750	69.85	2.027	51.49	1.400	35.56	46.46	206.66	64.30	11.25	C0600-092-2750-S	2.027	51.49	38.70	172.15	53.56	9.37

FOR INFORMATION ON ALTERNATIVE FINISHES, SEE PAGE 311

Part Numbers with an "*" are squared and not ground. **Part Numbers in bold** represent the newly expanded Associated Spring RAYMOND compression spring offering.

MUSIC WIRE															STAINLESS STEEL						
Catalog #	Outside Diameter (OD)		Wire Diameter (d)		Free Length (L) Approx		Load Length (L_1)		Solid Height (Sh) Approx		Load (P) at L_1		Spring Rate (R)		Catalog #	Load Length (L_1)		Load (P) at L_1		Spring Rate (R)	
	in	mm	in	mm	in	mm	in	mm	in	mm	lb	N	lb/in	N/mm		in	mm	lb	N	lb/in	N/mm
C0600-092-3000-M	0.600	15.24	0.092	2.34	3.000	76.20	2.207	56.06	1.510	38.35	46.46	206.66	58.60	10.26	C0600-092-3000-S	2.207	56.06	38.70	172.15	48.81	8.54
C0600-092-3250-M	0.600	15.24	0.092	2.34	3.250	82.55	2.386	60.60	1.619	41.12	46.46	206.66	53.80	9.42	C0600-092-3250-S	2.386	60.60	38.70	172.15	44.82	7.84
C0600-092-3500-M	0.600	15.24	0.092	2.34	3.500	88.90	2.566	65.18	1.729	43.92	46.46	206.66	49.70	8.70	C0600-092-3500-S	2.566	65.18	38.70	172.15	41.40	7.25
C0600-092-3750-M	0.600	15.24	0.092	2.34	3.750	95.25	2.746	69.75	1.838	46.69	46.46	206.66	46.30	8.10	C0600-092-3750-S	2.746	69.75	38.70	172.15	38.57	6.75
C0600-092-4000-M	0.600	15.24	0.092	2.34	4.000	101.60	2.925	74.30	1.948	49.48	46.46	206.66	43.20	7.56	C0600-092-4000-S	2.925	74.30	38.70	172.15	35.99	6.30
C0600-098-0750-M	0.600	15.24	0.098	2.49	0.750	19.05	0.608	15.44	0.559	14.20	55.14	245.27	387.80	67.87	C0600-098-0750-S	0.628	15.96	39.36	175.07	323.04	56.53
C0600-098-0880-M	0.600	15.24	0.098	2.49	0.880	22.35	0.704	17.88	0.621	15.77	55.14	245.27	314.10	54.97	C0600-098-0880-S	0.730	18.53	39.36	175.07	261.65	45.79
C0600-098-1000-M	0.600	15.24	0.098	2.49	1.000	25.40	0.794	20.17	0.678	17.22	55.14	245.27	267.20	46.76	C0600-098-1000-S	0.823	20.91	39.36	175.07	222.58	38.95
C0600-098-1250-M	0.600	15.24	0.098	2.49	1.250	31.75	0.980	24.89	0.798	20.27	55.14	245.27	203.90	35.68	C0600-098-1250-S	1.018	25.86	39.36	175.07	169.85	29.72
C0600-098-1500-M	0.600	15.24	0.098	2.49	1.500	38.10	1.165	29.59	0.917	23.29	55.14	245.27	164.80	28.84	C0600-098-1500-S	1.213	30.82	39.36	175.07	137.28	24.02
C0600-098-1750-M	0.600	15.24	0.098	2.49	1.750	44.45	1.351	34.32	1.037	26.34	55.14	245.27	138.30	24.20	C0600-098-1750-S	1.408	35.77	39.36	175.07	115.20	20.16
C0600-098-2000-M	0.600	15.24	0.098	2.49	2.000	50.80	1.537	39.04	1.156	29.36	55.14	245.27	119.10	20.84	C0600-098-2000-S	1.603	40.72	39.36	175.07	99.21	17.36
C0600-098-2250-M	0.600	15.24	0.098	2.49	2.250	57.15	1.723	43.76	1.276	32.41	55.14	245.27	104.60	18.31	C0600-098-2250-S	1.798	45.68	39.36	175.07	87.13	15.25
C0600-098-2500-M	0.600	15.24	0.098	2.49	2.500	63.50	1.909	48.49	1.395	35.43	55.14	245.27	93.30	16.33	C0600-098-2500-S	1.994	50.64	39.36	175.07	77.72	13.60
C0600-098-2750-M	0.600	15.24	0.098	2.49	2.750	69.85	2.095	53.21	1.515	38.48	55.14	245.27	84.10	14.72	C0600-098-2750-S	2.188	55.58	39.36	175.07	70.06	12.26
C0600-098-3000-M	0.600	15.24	0.098	2.49	3.000	76.20	2.280	57.91	1.634	41.50	55.14	245.27	76.60	13.41	C0600-098-3000-S	2.383	60.53	39.36	175.07	63.81	11.17
C0600-098-3250-M	0.600	15.24	0.098	2.49	3.250	82.55	2.466	62.64	1.754	44.55	55.14	245.27	70.40	12.32	C0600-098-3250-S	2.579	65.50	39.36	175.07	58.64	10.26
C0600-098-3500-M	0.600	15.24	0.098	2.49	3.500	88.90	2.652	67.36	1.873	47.57	55.14	245.27	65.00	11.38	C0600-098-3500-S	2.773	70.44	39.36	175.07	54.15	9.48
C0600-098-3750-M	0.600	15.24	0.098	2.49	3.750	95.25	2.838	72.09	1.993	50.62	55.14	245.27	60.50	10.59	C0600-098-3750-S	2.969	75.41	39.36	175.07	50.40	8.82
C0600-098-4000-M	0.600	15.24	0.098	2.49	4.000	101.60	3.024	76.81	2.112	53.64	55.14	245.27	56.50	9.89	C0600-098-4000-S	3.164	80.36	39.36	175.07	47.07	8.24
C0625-120-0875-M	**0.625**	**15.88**	**0.120**	**3.05**	**0.875**	**22.23**	**0.719**	**18.25**	**0.692**	**17.57**	**102.21**	**454.63**	**653.47**	**114.36**	**C0625-120-0875-S**	**0.737**	**18.73**	**74.91**	**333.21**	**544.34**	**95.26**
C0625-120-1000-M	**0.625**	**15.88**	**0.120**	**3.05**	**1.000**	**25.40**	**0.813**	**20.65**	**0.786**	**19.97**	**102.21**	**454.63**	**545.99**	**95.55**	**C0625-120-1000-S**	**0.835**	**21.22**	**74.91**	**333.21**	**454.81**	**79.59**
C0625-120-1250-M	**0.625**	**15.88**	**0.120**	**3.05**	**1.250**	**31.75**	**1.001**	**25.43**	**0.962**	**24.43**	**102.21**	**454.63**	**410.85**	**71.90**	**C0625-120-1250-S**	**1.031**	**26.19**	**74.91**	**333.21**	**342.24**	**59.89**
C0625-120-1500-M	**0.625**	**15.88**	**0.120**	**3.05**	**1.500**	**38.10**	**1.190**	**30.22**	**1.138**	**28.89**	**102.21**	**454.63**	**329.33**	**57.63**	**C0625-120-1500-S**	**1.227**	**31.16**	**74.91**	**333.21**	**274.33**	**48.01**
C0625-120-1750-M	**0.625**	**15.88**	**0.120**	**3.05**	**1.750**	**44.45**	**1.378**	**35.00**	**1.313**	**33.36**	**102.21**	**454.63**	**274.80**	**48.09**	**C0625-120-1750-S**	**1.423**	**36.14**	**74.91**	**333.21**	**228.91**	**40.06**
C0625-120-2000-M	**0.625**	**15.88**	**0.120**	**3.05**	**2.000**	**50.80**	**1.567**	**39.79**	**1.489**	**37.82**	**102.21**	**454.63**	**235.77**	**41.26**	**C0625-120-2000-S**	**1.619**	**41.11**	**74.91**	**333.21**	**196.40**	**34.37**
C0625-120-2250-M	**0.625**	**15.88**	**0.120**	**3.05**	**2.250**	**57.15**	**1.755**	**44.57**	**1.665**	**42.28**	**102.21**	**454.63**	**206.44**	**36.13**	**C0625-120-2250-S**	**1.814**	**46.09**	**74.91**	**333.21**	**171.97**	**30.09**
C0625-120-2500-M	**0.625**	**15.88**	**0.120**	**3.05**	**2.500**	**63.50**	**1.943**	**49.36**	**1.840**	**46.74**	**102.21**	**454.63**	**183.61**	**32.13**	**C0625-120-2500-S**	**2.010**	**51.06**	**74.91**	**333.21**	**152.95**	**26.77**
C0625-120-2750-M	**0.625**	**15.88**	**0.120**	**3.05**	**2.750**	**69.85**	**2.132**	**54.15**	**2.016**	**51.21**	**102.21**	**454.63**	**165.32**	**28.93**	**C0625-120-2750-S**	**2.206**	**56.03**	**74.91**	**333.21**	**137.71**	**24.10**
C0625-120-3000-M	**0.625**	**15.88**	**0.120**	**3.05**	**3.000**	**76.20**	**2.320**	**58.93**	**2.192**	**55.67**	**102.21**	**454.63**	**150.35**	**26.31**	**C0625-120-3000-S**	**2.402**	**61.01**	**74.91**	**333.21**	**125.24**	**21.92**
C0625-120-3250-M	**0.625**	**15.88**	**0.120**	**3.05**	**3.250**	**82.55**	**2.509**	**63.72**	**2.367**	**60.13**	**102.21**	**454.63**	**137.86**	**24.13**	**C0625-120-3250-S**	**2.598**	**65.98**	**74.91**	**333.21**	**114.84**	**20.10**
C0625-120-3500-M	**0.625**	**15.88**	**0.120**	**3.05**	**3.500**	**88.90**	**2.697**	**68.51**	**2.543**	**64.59**	**102.21**	**454.63**	**127.29**	**22.28**	**C0625-120-3500-S**	**2.794**	**70.96**	**74.91**	**333.21**	**106.03**	**18.56**
C0625-120-4000-M	**0.625**	**15.88**	**0.120**	**3.05**	**4.000**	**101.60**	**3.074**	**78.08**	**2.895**	**73.52**	**102.21**	**454.63**	**110.36**	**19.31**	**C0625-120-4000-S**	**3.185**	**80.90**	**74.91**	**333.21**	**91.93**	**16.09**
C0646-051-1250-M	**0.646**	**16.41**	**0.051**	**1.30**	**1.250**	**31.75**	**0.451**	**11.45**	**0.325**	**8.26**	**9.07**	**40.32**	**11.34**	**1.98**	**C0646-051-1250-S**	**0.519**	**13.17**	**7.21**	**32.08**	**9.86**	**1.73**
C0646-051-1375-M	**0.646**	**16.41**	**0.051**	**1.30**	**1.375**	**34.93**	**0.489**	**12.41**	**0.349**	**8.86**	**9.07**	**40.32**	**10.23**	**1.79**	**C0646-051-1375-S**	**0.564**	**14.32**	**7.21**	**32.08**	**8.89**	**1.56**
C0646-051-1500-M	**0.646**	**16.41**	**0.051**	**1.30**	**1.500**	**38.10**	**0.527**	**13.38**	**0.373**	**9.46**	**9.07**	**40.32**	**9.31**	**1.63**	**C0646-051-1500-S**	**0.609**	**15.48**	**7.21**	**32.08**	**8.10**	**1.42**
C0646-051-1625-M	**0.646**	**16.41**	**0.051**	**1.30**	**1.625**	**41.28**	**0.565**	**14.34**	**0.396**	**10.07**	**9.07**	**40.32**	**8.55**	**1.50**	**C0646-051-1625-S**	**0.655**	**16.63**	**7.21**	**32.08**	**7.43**	**1.30**
C0646-051-1750-M	**0.646**	**16.41**	**0.051**	**1.30**	**1.750**	**44.45**	**0.603**	**15.30**	**0.420**	**10.67**	**9.07**	**40.32**	**7.90**	**1.38**	**C0646-051-1750-S**	**0.700**	**17.78**	**7.21**	**32.08**	**6.87**	**1.20**
C0646-051-1875-M	**0.646**	**16.41**	**0.051**	**1.30**	**1.875**	**47.63**	**0.641**	**16.27**	**0.444**	**11.27**	**9.07**	**40.32**	**7.34**	**1.29**	**C0646-051-1875-S**	**0.745**	**18.93**	**7.21**	**32.08**	**6.39**	**1.12**
C0646-051-2000-M	**0.646**	**16.41**	**0.051**	**1.30**	**2.000**	**50.80**	**0.678**	**17.23**	**0.468**	**11.87**	**9.07**	**40.32**	**6.86**	**1.20**	**C0646-051-2000-S**	**0.791**	**20.08**	**7.21**	**32.08**	**5.97**	**1.04**
C0646-051-2125-M	**0.646**	**16.41**	**0.051**	**1.30**	**2.125**	**53.98**	**0.716**	**18.20**	**0.491**	**12.48**	**9.07**	**40.32**	**6.44**	**1.13**	**C0646-051-2125-S**	**0.836**	**21.24**	**7.21**	**32.08**	**5.60**	**0.98**
C0646-051-2250-M	**0.646**	**16.41**	**0.051**	**1.30**	**2.250**	**57.15**	**0.754**	**19.16**	**0.515**	**13.08**	**9.07**	**40.32**	**6.06**	**1.06**	**C0646-051-2250-S**	**0.881**	**22.39**	**7.21**	**32.08**	**5.27**	**0.92**
C0646-051-2375-M	**0.646**	**16.41**	**0.051**	**1.30**	**2.375**	**60.33**	**0.792**	**20.13**	**0.539**	**13.68**	**9.07**	**40.32**	**5.73**	**1.00**	**C0646-051-2375-S**	**0.927**	**23.54**	**7.21**	**32.08**	**4.98**	**0.87**
C0646-051-2500-M	**0.646**	**16.41**	**0.051**	**1.30**	**2.500**	**63.50**	**0.830**	**21.09**	**0.562**	**14.29**	**9.07**	**40.32**	**5.43**	**0.95**	**C0646-051-2500-S**	**0.972**	**24.69**	**7.21**	**32.08**	**4.72**	**0.83**
C0646-051-2625-M	**0.646**	**16.41**	**0.051**	**1.30**	**2.625**	**66.68**	**0.868**	**22.05**	**0.586**	**14.89**	**9.07**	**40.32**	**5.16**	**0.90**	**C0646-051-2625-S**	**1.018**	**25.85**	**7.21**	**32.08**	**4.49**	**0.79**
C0646-051-2750-M	**0.646**	**16.41**	**0.051**	**1.30**	**2.750**	**69.85**	**0.906**	**23.02**	**0.610**	**15.49**	**9.07**	**40.32**	**4.92**	**0.86**	**C0646-051-2750-S**	**1.063**	**27.00**	**7.21**	**32.08**	**4.28**	**0.75**
C0646-051-2875-M	**0.646**	**16.41**	**0.051**	**1.30**	**2.875**	**73.03**	**0.944**	**23.98**	**0.634**	**16.10**	**9.07**	**40.32**	**4.70**	**0.82**	**C0646-051-2875-S**	**1.108**	**28.15**	**7.21**	**32.08**	**4.08**	**0.71**
C0646-051-3000-M	**0.646**	**16.41**	**0.051**	**1.30**	**3.000**	**76.20**	**0.982**	**24.95**	**0.657**	**16.70**	**9.07**	**40.32**	**4.49**	**0.79**	**C0646-051-3000-S**	**1.154**	**29.30**	**7.21**	**32.08**	**3.91**	**0.68**
C0646-051-3250-M	**0.646**	**16.41**	**0.051**	**1.30**	**3.250**	**82.55**	**1.058**	**26.88**	**0.705**	**17.90**	**9.07**	**40.32**	**4.14**	**0.72**	**C0646-051-3250-S**	**1.244**	**31.61**	**7.21**	**32.08**	**3.60**	**0.63**
C0646-051-3500-M	**0.646**	**16.41**	**0.051**	**1.30**	**3.500**	**88.90**	**1.134**	**28.80**	**0.752**	**19.11**	**9.07**	**40.32**	**3.83**	**0.67**	**C0646-051-3500-S**	**1.335**	**33.91**	**7.21**	**32.08**	**3.33**	**0.58**
C0646-051-3750-M	**0.646**	**16.41**	**0.051**	**1.30**	**3.750**	**95.25**	**1.210**	**30.73**	**0.800**	**20.32**	**9.07**	**40.32**	**3.57**	**0.62**	**C0646-051-3750-S**	**1.426**	**36.21**	**7.21**	**32.08**	**3.10**	**0.54**
C0646-051-4000-M	**0.646**	**16.41**	**0.051**	**1.30**	**4.000**	**101.60**	**1.286**	**32.66**	**0.847**	**21.52**	**9.07**	**40.32**	**3.34**	**0.58**	**C0646-051-4000-S**	**1.517**	**38.52**	**7.21**	**32.08**	**2.90**	**0.51**
C0646-051-4250-M	**0.646**	**16.41**	**0.051**	**1.30**	**4.250**	**107.95**	**1.362**	**34.59**	**0.895**	**22.73**	**9.07**	**40.32**	**3.14**	**0.55**	**C0646-051-4250-S**	**1.607**	**40.82**	**7.21**	**32.08**	**2.73**	**0.48**
C0646-051-4500-M	**0.646**	**16.41**	**0.051**	**1.30**	**4.500**	**114.30**	**1.438**	**36.52**	**0.942**	**23.93**	**9.07**	**40.32**	**2.96**	**0.52**	**C0646-051-4500-S**	**1.698**	**43.13**	**7.21**	**32.08**	**2.57**	**0.45**
C0646-051-4750-M	**0.646**	**16.41**	**0.051**	**1.30**	**4.750**	**120.65**	**1.514**	**38.45**	**0.990**	**25.14**	**9.07**	**40.32**	**2.80**	**0.49**	**C0646-051-4750-S**	**1.789**	**45.43**	**7.21**	**32.08**	**2.44**	**0.43**
C0646-051-5000-M	**0.646**	**16.41**	**0.051**	**1.30**	**5.000**	**127.00**	**1.590**	**40.38**	**1.037**	**26.34**	**9.07**	**40.32**	**2.66**	**0.47**	**C0646-051-5000-S**	**1.879**	**47.74**	**7.21**	**32.08**	**2.31**	**0.40**
C0646-051-5250-M	**0.646**	**16.41**	**0.051**	**1.30**	**5.250**	**133.35**	**1.666**	**42.31**	**1.085**	**27.55**	**9.07**	**40.32**	**2.53**	**0.44**	**C0646-051-5250-S**	**1.970**	**50.04**	**7.21**	**32.08**	**2.20**	**0.38**
C0646-051-5500-M	**0.646**	**16.41**	**0.051**	**1.30**	**5.500**	**139.70**	**1.741**	**44.23**	**1.132**	**28.76**	**9.07**	**40.32**	**2.41**	**0.42**	**C0646-051-5500-S**	**2.061**	**52.34**	**7.21**	**32.08**	**2.10**	**0.37**
C0646-051-5750-M	**0.646**	**16.41**	**0.051**	**1.30**	**5.750**	**146.05**	**1.817**	**46.16**	**1.180**	**29.96**	**9.07**	**40.32**	**2.31**	**0.40**	**C0646-051-5750-S**	**2.152**	**54.65**	**7.21**	**32.08**	**2.00**	**0.35**
C0646-051-6000-M	**0.646**	**16.41**	**0.051**	**1.30**	**6.000**	**152.40**	**1.893**	**48.09**	**1.227**	**31.17**	**9.07**	**40.32**	**2.21**	**0.39**	**C0646-051-6000-S**	**2.242**	**56.95**	**7.21**	**32.08**	**1.92**	**0.34**
C0646-051-6250-M	**0.646**	**16.41**	**0.051**	**1.30**	**6.250**	**158.75**	**1.969**	**50.02**	**1.275**	**32.37**	**9.07**	**40.32**	**2.12**	**0.37**	**C0646-051-6250-S**	**2.333**	**59.26**	**7.21**	**32.08**	**1.84**	**0.32**
C0646-051-6500-M	**0.646**	**16.41**	**0.051**	**1.30**	**6.500**	**165.10**	**2.045**	**51.95**	**1.322**	**33.58**	**9.07**	**40.32**	**2.04**	**0.36**	**C0646-051-6500-S**	**2.424**	**61.56**	**7.21**	**32.08**	**1.77**	**0.31**
C0646-051-6750-M	**0.646**	**16.41**	**0.051**	**1.30**	**6.750**	**171.45**	**2.121**	**53.88**	**1.370**	**34.79**	**9.07**	**40.32**	**1.96**	**0.34**	**C0646-051-6750-S**	**2.514**	**63.87**	**7.21**	**32.08**	**1.70**	**0.30**
C0646-051-7000-M	**0.646**	**16.41**	**0.051**	**1.30**	**7.000**	**177.80**	**2.197**	**55.81**	**1.417**	**35.99**	**9.07**	**40.32**	**1.89**	**0.33**	**C0646-051-7000-S**	**2.605**	**66.17**	**7.21**	**32.08**	**1.64**	**0.29**

Part Numbers with an "*" are squared and not ground. **Part Numbers in bold** represent the newly expanded Associated Spring RAYMOND compression spring offering.

MUSIC WIRE															STAINLESS STEEL						
Catalog #	Outside Diameter (OD)		Wire Diameter (d)		Free Length (L) Approx		Load Length (L_1)		Solid Height (Sh) Approx		Load (P) at L_1		Spring Rate (R)		Catalog #	Load Length (L_1)		Load (P) at L_1		Spring Rate (R)	
	in	mm	in	mm	in	mm	in	mm	in	mm	lb	N	lb/in	N/mm		in	mm	lb	N	lb/in	N/mm
C0646-051-7500-M	**0.646**	**16.41**	**0.051**	**1.30**	**7.500**	**190.50**	**2.349**	**59.66**	**1.512**	**38.40**	**9.07**	**40.32**	**1.76**	**0.31**	**C0646-051-7500-S**	**2.787**	**70.78**	**7.21**	**32.08**	**1.53**	**0.27**
C0646-051-8000-M	**0.646**	**16.41**	**0.051**	**1.30**	**8.000**	**203.20**	**2.501**	**63.52**	**1.607**	**40.81**	**9.07**	**40.32**	**1.65**	**0.29**	**C0646-051-8000-S**	**2.968**	**75.39**	**7.21**	**32.08**	**1.43**	**0.25**
C0646-051-8500-M	**0.646**	**16.41**	**0.051**	**1.30**	**8.500**	**215.90**	**2.653**	**67.38**	**1.702**	**43.23**	**9.07**	**40.32**	**1.55**	**0.27**	**C0646-051-8500-S**	**3.149**	**80.00**	**7.21**	**32.08**	**1.35**	**0.24**
C0646-051-9000-M	**0.646**	**16.41**	**0.051**	**1.30**	**9.000**	**228.60**	**2.805**	**71.23**	**1.797**	**45.64**	**9.07**	**40.32**	**1.46**	**0.26**	**C0646-051-9000-S**	**3.331**	**84.60**	**7.21**	**32.08**	**1.27**	**0.22**
C0646-051-9500-M	**0.646**	**16.41**	**0.051**	**1.30**	**9.500**	**241.30**	**2.956**	**75.09**	**1.892**	**48.05**	**9.07**	**40.32**	**1.39**	**0.24**	**C0646-051-9500-S**	**3.512**	**89.21**	**7.21**	**32.08**	**1.21**	**0.21**
C0646-055-1250-M	**0.646**	**16.41**	**0.055**	**1.40**	**1.250**	**31.75**	**0.485**	**12.31**	**0.367**	**9.33**	**11.19**	**49.78**	**14.62**	**2.56**	**C0646-055-1250-S**	**0.550**	**13.97**	**8.90**	**39.59**	**12.72**	**2.23**
C0646-055-1375-M	**0.646**	**16.41**	**0.055**	**1.40**	**1.375**	**34.93**	**0.526**	**13.36**	**0.395**	**10.03**	**11.19**	**49.78**	**13.18**	**2.31**	**C0646-055-1375-S**	**0.598**	**15.20**	**8.90**	**39.59**	**11.46**	**2.01**
C0646-055-1500-M	**0.646**	**16.41**	**0.055**	**1.40**	**1.500**	**38.10**	**0.567**	**14.40**	**0.422**	**10.73**	**11.19**	**49.78**	**11.99**	**2.10**	**C0646-055-1500-S**	**0.647**	**16.43**	**8.90**	**39.59**	**10.43**	**1.83**
C0646-055-1625-M	**0.646**	**16.41**	**0.055**	**1.40**	**1.625**	**41.28**	**0.608**	**15.44**	**0.450**	**11.43**	**11.19**	**49.78**	**11.00**	**1.93**	**C0646-055-1625-S**	**0.695**	**17.65**	**8.90**	**39.59**	**9.57**	**1.67**
C0646-055-1750-M	**0.646**	**16.41**	**0.055**	**1.40**	**1.750**	**44.45**	**0.649**	**16.49**	**0.478**	**12.13**	**11.19**	**49.78**	**10.17**	**1.78**	**C0646-055-1750-S**	**0.743**	**18.88**	**8.90**	**39.59**	**8.84**	**1.55**
C0646-055-1875-M	**0.646**	**16.41**	**0.055**	**1.40**	**1.875**	**47.63**	**0.690**	**17.53**	**0.505**	**12.83**	**11.19**	**49.78**	**9.45**	**1.65**	**C0646-055-1875-S**	**0.792**	**20.10**	**8.90**	**39.59**	**8.21**	**1.44**
C0646-055-2000-M	**0.646**	**16.41**	**0.055**	**1.40**	**2.000**	**50.80**	**0.731**	**18.57**	**0.533**	**13.53**	**11.19**	**49.78**	**8.82**	**1.54**	**C0646-055-2000-S**	**0.840**	**21.33**	**8.90**	**39.59**	**7.67**	**1.34**
C0646-055-2125-M	**0.646**	**16.41**	**0.055**	**1.40**	**2.125**	**53.98**	**0.772**	**19.62**	**0.560**	**14.23**	**11.19**	**49.78**	**8.27**	**1.45**	**C0646-055-2125-S**	**0.888**	**22.56**	**8.90**	**39.59**	**7.19**	**1.26**
C0646-055-2250-M	**0.646**	**16.41**	**0.055**	**1.40**	**2.250**	**57.15**	**0.813**	**20.66**	**0.588**	**14.93**	**11.19**	**49.78**	**7.79**	**1.36**	**C0646-055-2250-S**	**0.936**	**23.78**	**8.90**	**39.59**	**6.77**	**1.19**
C0646-055-2375-M	**0.646**	**16.41**	**0.055**	**1.40**	**2.375**	**60.33**	**0.854**	**21.70**	**0.615**	**15.63**	**11.19**	**49.78**	**7.36**	**1.29**	**C0646-055-2375-S**	**0.985**	**25.01**	**8.90**	**39.59**	**6.40**	**1.12**
C0646-055-2500-M	**0.646**	**16.41**	**0.055**	**1.40**	**2.500**	**63.50**	**0.896**	**22.75**	**0.643**	**16.33**	**11.19**	**49.78**	**6.98**	**1.22**	**C0646-055-2500-S**	**1.033**	**26.23**	**8.90**	**39.59**	**6.07**	**1.06**
C0646-055-2625-M	**0.646**	**16.41**	**0.055**	**1.40**	**2.625**	**66.68**	**0.937**	**23.79**	**0.671**	**17.03**	**11.19**	**49.78**	**6.63**	**1.16**	**C0646-055-2625-S**	**1.081**	**27.46**	**8.90**	**39.59**	**5.76**	**1.01**
C0646-055-2750-M	**0.646**	**16.41**	**0.055**	**1.40**	**2.750**	**69.85**	**0.978**	**24.84**	**0.698**	**17.74**	**11.19**	**49.78**	**6.32**	**1.11**	**C0646-055-2750-S**	**1.129**	**28.69**	**8.90**	**39.59**	**5.49**	**0.96**
C0646-055-2875-M	**0.646**	**16.41**	**0.055**	**1.40**	**2.875**	**73.03**	**1.019**	**25.88**	**0.726**	**18.44**	**11.19**	**49.78**	**6.03**	**1.06**	**C0646-055-2875-S**	**1.178**	**29.91**	**8.90**	**39.59**	**5.24**	**0.92**
C0646-055-3000-M	**0.646**	**16.41**	**0.055**	**1.40**	**3.000**	**76.20**	**1.060**	**26.92**	**0.753**	**19.14**	**11.19**	**49.78**	**5.77**	**1.01**	**C0646-055-3000-S**	**1.226**	**31.14**	**8.90**	**39.59**	**5.02**	**0.88**
C0646-055-3250-M	**0.646**	**16.41**	**0.055**	**1.40**	**3.250**	**82.55**	**1.142**	**29.01**	**0.809**	**20.54**	**11.19**	**49.78**	**5.31**	**0.93**	**C0646-055-3250-S**	**1.322**	**33.59**	**8.90**	**39.59**	**4.62**	**0.81**
C0646-055-3500-M	**0.646**	**16.41**	**0.055**	**1.40**	**3.500**	**88.90**	**1.224**	**31.10**	**0.864**	**21.94**	**11.19**	**49.78**	**4.92**	**0.86**	**C0646-055-3500-S**	**1.419**	**36.04**	**8.90**	**39.59**	**4.28**	**0.75**
C0646-055-3750-M	**0.646**	**16.41**	**0.055**	**1.40**	**3.750**	**95.25**	**1.306**	**33.18**	**0.919**	**23.34**	**11.19**	**49.78**	**4.58**	**0.80**	**C0646-055-3750-S**	**1.515**	**38.49**	**8.90**	**39.59**	**3.98**	**0.70**
C0646-055-4000-M	**0.646**	**16.41**	**0.055**	**1.40**	**4.000**	**101.60**	**1.389**	**35.27**	**0.974**	**24.74**	**11.19**	**49.78**	**4.29**	**0.75**	**C0646-055-4000-S**	**1.612**	**40.95**	**8.90**	**39.59**	**3.73**	**0.65**
C0646-055-4250-M	**0.646**	**16.41**	**0.055**	**1.40**	**4.250**	**107.95**	**1.471**	**37.36**	**1.029**	**26.15**	**11.19**	**49.78**	**4.03**	**0.70**	**C0646-055-4250-S**	**1.709**	**43.40**	**8.90**	**39.59**	**3.50**	**0.61**
C0646-055-4500-M	**0.646**	**16.41**	**0.055**	**1.40**	**4.500**	**114.30**	**1.553**	**39.45**	**1.085**	**27.55**	**11.19**	**49.78**	**3.80**	**0.66**	**C0646-055-4500-S**	**1.805**	**45.85**	**8.90**	**39.59**	**3.30**	**0.58**
C0646-055-4750-M	**0.646**	**16.41**	**0.055**	**1.40**	**4.750**	**120.65**	**1.635**	**41.53**	**1.140**	**28.95**	**11.19**	**49.78**	**3.59**	**0.63**	**C0646-055-4750-S**	**1.902**	**48.30**	**8.90**	**39.59**	**3.12**	**0.55**
C0646-055-5000-M	**0.646**	**16.41**	**0.055**	**1.40**	**5.000**	**127.00**	**1.717**	**43.62**	**1.195**	**30.35**	**11.19**	**49.78**	**3.41**	**0.60**	**C0646-055-5000-S**	**1.998**	**50.75**	**8.90**	**39.59**	**2.97**	**0.52**
C0646-055-5250-M	**0.646**	**16.41**	**0.055**	**1.40**	**5.250**	**133.35**	**1.799**	**45.71**	**1.250**	**31.75**	**11.19**	**49.78**	**3.24**	**0.57**	**C0646-055-5250-S**	**2.095**	**53.20**	**8.90**	**39.59**	**2.82**	**0.49**
C0646-055-5500-M	**0.646**	**16.41**	**0.055**	**1.40**	**5.500**	**139.70**	**1.882**	**47.79**	**1.305**	**33.15**	**11.19**	**49.78**	**3.09**	**0.54**	**C0646-055-5500-S**	**2.191**	**55.66**	**8.90**	**39.59**	**2.69**	**0.47**
C0646-055-5750-M	**0.646**	**16.41**	**0.055**	**1.40**	**5.750**	**146.05**	**1.964**	**49.88**	**1.360**	**34.56**	**11.19**	**49.78**	**2.96**	**0.52**	**C0646-055-5750-S**	**2.288**	**58.11**	**8.90**	**39.59**	**2.57**	**0.45**
C0646-055-6000-M	**0.646**	**16.41**	**0.055**	**1.40**	**6.000**	**152.40**	**2.046**	**51.97**	**1.416**	**35.96**	**11.19**	**49.78**	**2.83**	**0.50**	**C0646-055-6000-S**	**2.384**	**60.56**	**8.90**	**39.59**	**2.46**	**0.43**
C0646-055-6250-M	**0.646**	**16.41**	**0.055**	**1.40**	**6.250**	**158.75**	**2.128**	**54.06**	**1.471**	**37.36**	**11.19**	**49.78**	**2.72**	**0.48**	**C0646-055-6250-S**	**2.481**	**63.01**	**8.90**	**39.59**	**2.36**	**0.41**
C0646-055-6500-M	**0.646**	**16.41**	**0.055**	**1.40**	**6.500**	**165.10**	**2.210**	**56.14**	**1.526**	**38.76**	**11.19**	**49.78**	**2.61**	**0.46**	**C0646-055-6500-S**	**2.577**	**65.46**	**8.90**	**39.59**	**2.27**	**0.40**
C0646-055-6750-M	**0.646**	**16.41**	**0.055**	**1.40**	**6.750**	**171.45**	**2.293**	**58.23**	**1.581**	**40.16**	**11.19**	**49.78**	**2.51**	**0.44**	**C0646-055-6750-S**	**2.674**	**67.92**	**8.90**	**39.59**	**2.18**	**0.38**
C0646-055-7000-M	**0.646**	**16.41**	**0.055**	**1.40**	**7.000**	**177.80**	**2.375**	**60.32**	**1.636**	**41.56**	**11.19**	**49.78**	**2.42**	**0.42**	**C0646-055-7000-S**	**2.770**	**70.37**	**8.90**	**39.59**	**2.10**	**0.37**
C0646-055-7500-M	**0.646**	**16.41**	**0.055**	**1.40**	**7.500**	**190.50**	**2.539**	**64.49**	**1.747**	**44.37**	**11.19**	**49.78**	**2.26**	**0.39**	**C0646-055-7500-S**	**2.963**	**75.27**	**8.90**	**39.59**	**1.96**	**0.34**
C0646-055-8000-M	**0.646**	**16.41**	**0.055**	**1.40**	**8.000**	**203.20**	**2.703**	**68.67**	**1.857**	**47.17**	**11.19**	**49.78**	**2.11**	**0.37**	**C0646-055-8000-S**	**3.156**	**80.18**	**8.90**	**39.59**	**1.84**	**0.32**
C0646-055-8500-M	**0.646**	**16.41**	**0.055**	**1.40**	**8.500**	**215.90**	**2.868**	**72.84**	**1.968**	**49.98**	**11.19**	**49.78**	**1.99**	**0.35**	**C0646-055-8500-S**	**3.350**	**85.08**	**8.90**	**39.59**	**1.73**	**0.30**
C0646-055-9000-M	**0.646**	**16.41**	**0.055**	**1.40**	**9.000**	**228.60**	**3.032**	**77.02**	**2.078**	**52.78**	**11.19**	**49.78**	**1.88**	**0.33**	**C0646-055-9000-S**	**3.543**	**89.98**	**8.90**	**39.59**	**1.63**	**0.29**
C0646-055-9500-M	**0.646**	**16.41**	**0.055**	**1.40**	**9.500**	**241.30**	**3.196**	**81.19**	**2.188**	**55.58**	**11.19**	**49.78**	**1.78**	**0.31**	**C0646-055-9500-S**	**3.736**	**94.89**	**8.90**	**39.59**	**1.54**	**0.27**
C0646-059-1125-M	**0.646**	**16.41**	**0.059**	**1.50**	**1.125**	**28.58**	**0.475**	**12.07**	**0.379**	**9.62**	**13.61**	**60.53**	**20.94**	**3.67**	**C0646-059-1125-S**	**0.531**	**13.50**	**10.81**	**48.09**	**18.21**	**3.19**
C0646-059-1250-M	**0.646**	**16.41**	**0.059**	**1.50**	**1.250**	**31.75**	**0.520**	**13.20**	**0.410**	**10.42**	**13.61**	**60.53**	**18.63**	**3.26**	**C0646-059-1250-S**	**0.583**	**14.80**	**10.81**	**48.09**	**16.20**	**2.84**
C0646-059-1375-M	**0.646**	**16.41**	**0.059**	**1.50**	**1.375**	**34.93**	**0.564**	**14.32**	**0.442**	**11.22**	**13.61**	**60.53**	**16.78**	**2.94**	**C0646-059-1375-S**	**0.634**	**16.11**	**10.81**	**48.09**	**14.59**	**2.55**
C0646-059-1500-M	**0.646**	**16.41**	**0.059**	**1.50**	**1.500**	**38.10**	**0.608**	**15.45**	**0.473**	**12.03**	**13.61**	**60.53**	**15.26**	**2.67**	**C0646-059-1500-S**	**0.685**	**17.41**	**10.81**	**48.09**	**13.27**	**2.32**
C0646-059-1625-M	**0.646**	**16.41**	**0.059**	**1.50**	**1.625**	**41.28**	**0.653**	**16.58**	**0.505**	**12.83**	**13.61**	**60.53**	**14.00**	**2.45**	**C0646-059-1625-S**	**0.737**	**18.71**	**10.81**	**48.09**	**12.17**	**2.13**
C0646-059-1750-M	**0.646**	**16.41**	**0.059**	**1.50**	**1.750**	**44.45**	**0.697**	**17.70**	**0.537**	**13.63**	**13.61**	**60.53**	**12.92**	**2.26**	**C0646-059-1750-S**	**0.788**	**20.02**	**10.81**	**48.09**	**11.24**	**1.97**
C0646-059-1875-M	**0.646**	**16.41**	**0.059**	**1.50**	**1.875**	**47.63**	**0.741**	**18.83**	**0.568**	**14.44**	**13.61**	**60.53**	**12.00**	**2.10**	**C0646-059-1875-S**	**0.839**	**21.32**	**10.81**	**48.09**	**10.44**	**1.83**
C0646-059-2000-M	**0.646**	**16.41**	**0.059**	**1.50**	**2.000**	**50.80**	**0.786**	**19.96**	**0.600**	**15.24**	**13.61**	**60.53**	**11.21**	**1.96**	**C0646-059-2000-S**	**0.891**	**22.62**	**10.81**	**48.09**	**9.75**	**1.71**
C0646-059-2125-M	**0.646**	**16.41**	**0.059**	**1.50**	**2.125**	**53.98**	**0.830**	**21.08**	**0.632**	**16.04**	**13.61**	**60.53**	**10.51**	**1.84**	**C0646-059-2125-S**	**0.942**	**23.93**	**10.81**	**48.09**	**9.14**	**1.60**
C0646-059-2250-M	**0.646**	**16.41**	**0.059**	**1.50**	**2.250**	**57.15**	**0.874**	**22.21**	**0.663**	**16.85**	**13.61**	**60.53**	**9.89**	**1.73**	**C0646-059-2250-S**	**0.993**	**25.23**	**10.81**	**48.09**	**8.60**	**1.51**
C0646-059-2375-M	**0.646**	**16.41**	**0.059**	**1.50**	**2.375**	**60.33**	**0.919**	**23.34**	**0.695**	**17.65**	**13.61**	**60.53**	**9.34**	**1.64**	**C0646-059-2375-S**	**1.045**	**26.53**	**10.81**	**48.09**	**8.13**	**1.42**
C0646-059-2500-M	**0.646**	**16.41**	**0.059**	**1.50**	**2.500**	**63.50**	**0.963**	**24.46**	**0.726**	**18.45**	**13.61**	**60.53**	**8.85**	**1.55**	**C0646-059-2500-S**	**1.096**	**27.84**	**10.81**	**48.09**	**7.70**	**1.35**
C0646-059-2625-M	**0.646**	**16.41**	**0.059**	**1.50**	**2.625**	**66.68**	**1.007**	**25.59**	**0.758**	**19.26**	**13.61**	**60.53**	**8.41**	**1.47**	**C0646-059-2625-S**	**1.147**	**29.14**	**10.81**	**48.09**	**7.32**	**1.28**
C0646-059-2750-M	**0.646**	**16.41**	**0.059**	**1.50**	**2.750**	**69.85**	**1.052**	**26.72**	**0.790**	**20.06**	**13.61**	**60.53**	**8.01**	**1.40**	**C0646-059-2750-S**	**1.199**	**30.44**	**10.81**	**48.09**	**6.97**	**1.22**
C0646-059-2875-M	**0.646**	**16.41**	**0.059**	**1.50**	**2.875**	**73.03**	**1.096**	**27.84**	**0.821**	**20.86**	**13.61**	**60.53**	**7.65**	**1.34**	**C0646-059-2875-S**	**1.250**	**31.75**	**10.81**	**48.09**	**6.65**	**1.16**
C0646-059-3000-M	**0.646**	**16.41**	**0.059**	**1.50**	**3.000**	**76.20**	**1.140**	**28.97**	**0.853**	**21.66**	**13.61**	**60.53**	**7.32**	**1.28**	**C0646-059-3000-S**	**1.301**	**33.05**	**10.81**	**48.09**	**6.36**	**1.11**
C0646-059-3250-M	**0.646**	**16.41**	**0.059**	**1.50**	**3.250**	**82.55**	**1.229**	**31.22**	**0.916**	**23.27**	**13.61**	**60.53**	**6.73**	**1.18**	**C0646-059-3250-S**	**1.404**	**35.66**	**10.81**	**48.09**	**5.86**	**1.02**
C0646-059-3500-M	**0.646**	**16.41**	**0.059**	**1.50**	**3.500**	**88.90**	**1.318**	**33.47**	**0.979**	**24.88**	**13.61**	**60.53**	**6.24**	**1.09**	**C0646-059-3500-S**	**1.507**	**38.27**	**10.81**	**48.09**	**5.42**	**0.95**
C0646-059-3750-M	**0.646**	**16.41**	**0.059**	**1.50**	**3.750**	**95.25**	**1.407**	**35.73**	**1.043**	**26.48**	**13.61**	**60.53**	**5.81**	**1.02**	**C0646-059-3750-S**	**1.609**	**40.87**	**10.81**	**48.09**	**5.05**	**0.88**
C0646-059-4000-M	**0.646**	**16.41**	**0.059**	**1.50**	**4.000**	**101.60**	**1.495**	**37.98**	**1.106**	**28.09**	**13.61**	**60.53**	**5.43**	**0.95**	**C0646-059-4000-S**	**1.712**	**43.48**	**10.81**	**48.09**	**4.72**	**0.83**
C0646-059-4250-M	**0.646**	**16.41**	**0.059**	**1.50**	**4.250**	**107.95**	**1.584**	**40.23**	**1.169**	**29.70**	**13.61**	**60.53**	**5.10**	**0.89**	**C0646-059-4250-S**	**1.814**	**46.09**	**10.81**	**48.09**	**4.44**	**0.78**
C0646-059-4500-M	**0.646**	**16.41**	**0.059**	**1.50**	**4.500**	**114.30**	**1.673**	**42.49**	**1.232**	**31.30**	**13.61**	**60.53**	**4.81**	**0.84**	**C0646-059-4500-S**	**1.917**	**48.69**	**10.81**	**48.09**	**4.19**	**0.73**
C0646-059-4750-M	**0.646**	**16.41**	**0.059**	**1.50**	**4.750**	**120.65**	**1.761**	**44.74**	**1.296**	**32.91**	**13.61**	**60.53**	**4.55**	**0.80**	**C0646-059-4750-S**	**2.020**	**51.30**	**10.81**	**48.09**	**3.96**	**0.69**

FOR INFORMATION ON ALTERNATIVE FINISHES, SEE PAGE 311

Part Numbers with an "*" are squared and not ground. **Part Numbers in bold** represent the newly expanded Associated Spring RAYMOND compression spring offering.

(OD) 0.646 - 0.646

MUSIC WIRE															STAINLESS STEEL						
Catalog #	Outside Diameter (OD)		Wire Diameter (d)		Free Length (L) Approx		Load Length (L_1)		Solid Height (Sh) Approx		Load (P) at L_1		Spring Rate (R)		Catalog #	Load Length (L_1)		Load (P) at L_1		Spring Rate (R)	
	in	mm	in	mm	in	mm	in	mm	in	mm	lb	N	lb/in	N/mm		in	mm	lb	N	lb/in	N/mm
C0646-059-5000-M	**0.646**	**16.41**	**0.059**	**1.50**	**5.000**	**127.00**	**1.850**	**46.99**	**1.359**	**34.52**	**13.61**	**60.53**	**4.32**	**0.76**	**C0646-059-5000-S**	**2.122**	**53.91**	**10.81**	**48.09**	**3.76**	**0.66**
C0646-059-5250-M	**0.646**	**16.41**	**0.059**	**1.50**	**5.250**	**133.35**	**1.939**	**49.24**	**1.422**	**36.12**	**13.61**	**60.53**	**4.11**	**0.72**	**C0646-059-5250-S**	**2.225**	**56.51**	**10.81**	**48.09**	**3.57**	**0.63**
C0646-059-5500-M	**0.646**	**16.41**	**0.059**	**1.50**	**5.500**	**139.70**	**2.027**	**51.50**	**1.485**	**37.73**	**13.61**	**60.53**	**3.92**	**0.69**	**C0646-059-5500-S**	**2.328**	**59.12**	**10.81**	**48.09**	**3.41**	**0.60**
C0646-059-5750-M	**0.646**	**16.41**	**0.059**	**1.50**	**5.750**	**146.05**	**2.116**	**53.75**	**1.549**	**39.33**	**13.61**	**60.53**	**3.75**	**0.66**	**C0646-059-5750-S**	**2.430**	**61.73**	**10.81**	**48.09**	**3.26**	**0.57**
C0646-059-6000-M	**0.646**	**16.41**	**0.059**	**1.50**	**6.000**	**152.40**	**2.205**	**56.00**	**1.612**	**40.94**	**13.61**	**60.53**	**3.59**	**0.63**	**C0646-059-6000-S**	**2.533**	**64.34**	**10.81**	**48.09**	**3.12**	**0.55**
C0646-059-6250-M	**0.646**	**16.41**	**0.059**	**1.50**	**6.250**	**158.75**	**2.294**	**58.26**	**1.675**	**42.55**	**13.61**	**60.53**	**3.44**	**0.60**	**C0646-059-6250-S**	**2.636**	**66.94**	**10.81**	**48.09**	**2.99**	**0.52**
C0646-059-6500-M	**0.646**	**16.41**	**0.059**	**1.50**	**6.500**	**165.10**	**2.382**	**60.51**	**1.738**	**44.15**	**13.61**	**60.53**	**3.31**	**0.58**	**C0646-059-6500-S**	**2.738**	**69.55**	**10.81**	**48.09**	**2.87**	**0.50**
C0646-059-6750-M	**0.646**	**16.41**	**0.059**	**1.50**	**6.750**	**171.45**	**2.471**	**62.76**	**1.802**	**45.76**	**13.61**	**60.53**	**3.18**	**0.56**	**C0646-059-6750-S**	**2.841**	**72.16**	**10.81**	**48.09**	**2.77**	**0.48**
C0646-059-7000-M	**0.646**	**16.41**	**0.059**	**1.50**	**7.000**	**177.80**	**2.560**	**65.01**	**1.865**	**47.37**	**13.61**	**60.53**	**3.07**	**0.54**	**C0646-059-7000-S**	**2.943**	**74.76**	**10.81**	**48.09**	**2.67**	**0.47**
C0646-059-7500-M	**0.646**	**16.41**	**0.059**	**1.50**	**7.500**	**190.50**	**2.737**	**69.52**	**1.991**	**50.58**	**13.61**	**60.53**	**2.86**	**0.50**	**C0646-059-7500-S**	**3.149**	**79.98**	**10.81**	**48.09**	**2.48**	**0.43**
C0646-059-8000-M	**0.646**	**16.41**	**0.059**	**1.50**	**8.000**	**203.20**	**2.914**	**74.03**	**2.118**	**53.79**	**13.61**	**60.53**	**2.68**	**0.47**	**C0646-059-8000-S**	**3.354**	**85.19**	**10.81**	**48.09**	**2.33**	**0.41**
C0646-059-8500-M	**0.646**	**16.41**	**0.059**	**1.50**	**8.500**	**215.90**	**3.092**	**78.53**	**2.244**	**57.00**	**13.61**	**60.53**	**2.52**	**0.44**	**C0646-059-8500-S**	**3.559**	**90.41**	**10.81**	**48.09**	**2.19**	**0.38**
C0646-059-9000-M	**0.646**	**16.41**	**0.059**	**1.50**	**9.000**	**228.60**	**3.269**	**83.04**	**2.371**	**60.22**	**13.61**	**60.53**	**2.38**	**0.42**	**C0646-059-9000-S**	**3.765**	**95.62**	**10.81**	**48.09**	**2.07**	**0.36**
C0646-059-9500-M	**0.646**	**16.41**	**0.059**	**1.50**	**9.500**	**241.30**	**3.447**	**87.54**	**2.497**	**63.43**	**13.61**	**60.53**	**2.25**	**0.39**	**C0646-059-9500-S**	**3.970**	**100.83**	**10.81**	**48.09**	**1.96**	**0.34**
C0646-063-1125-M	**0.646**	**16.41**	**0.063**	**1.60**	**1.125**	**28.58**	**0.507**	**12.89**	**0.418**	**10.62**	**16.33**	**72.64**	**26.44**	**4.63**	**C0646-063-1125-S**	**0.561**	**14.26**	**12.96**	**57.63**	**22.99**	**4.02**
C0646-063-1250-M	**0.646**	**16.41**	**0.063**	**1.60**	**1.250**	**31.75**	**0.555**	**14.10**	**0.454**	**11.53**	**16.33**	**72.64**	**23.50**	**4.11**	**C0646-063-1250-S**	**0.616**	**15.64**	**12.96**	**57.63**	**20.43**	**3.58**
C0646-063-1375-M	**0.646**	**16.41**	**0.063**	**1.60**	**1.375**	**34.93**	**0.603**	**15.31**	**0.490**	**12.44**	**16.33**	**72.64**	**21.15**	**3.70**	**C0646-063-1375-S**	**0.670**	**17.03**	**12.96**	**57.63**	**18.39**	**3.22**
C0646-063-1500-M	**0.646**	**16.41**	**0.063**	**1.60**	**1.500**	**38.10**	**0.650**	**16.52**	**0.526**	**13.35**	**16.33**	**72.64**	**19.22**	**3.36**	**C0646-063-1500-S**	**0.725**	**18.41**	**12.96**	**57.63**	**16.72**	**2.93**
C0646-063-1625-M	**0.646**	**16.41**	**0.063**	**1.60**	**1.625**	**41.28**	**0.698**	**17.73**	**0.561**	**14.26**	**16.33**	**72.64**	**17.62**	**3.08**	**C0646-063-1625-S**	**0.779**	**19.80**	**12.96**	**57.63**	**15.32**	**2.68**
C0646-063-1750-M	**0.646**	**16.41**	**0.063**	**1.60**	**1.750**	**44.45**	**0.746**	**18.95**	**0.597**	**15.17**	**16.33**	**72.64**	**16.26**	**2.85**	**C0646-063-1750-S**	**0.834**	**21.18**	**12.96**	**57.63**	**14.14**	**2.47**
C0646-063-1875-M	**0.646**	**16.41**	**0.063**	**1.60**	**1.875**	**47.63**	**0.794**	**20.16**	**0.633**	**16.08**	**16.33**	**72.64**	**15.10**	**2.64**	**C0646-063-1875-S**	**0.888**	**22.56**	**12.96**	**57.63**	**13.13**	**2.30**
C0646-063-2000-M	**0.646**	**16.41**	**0.063**	**1.60**	**2.000**	**50.80**	**0.841**	**21.37**	**0.669**	**16.98**	**16.33**	**72.64**	**14.09**	**2.47**	**C0646-063-2000-S**	**0.943**	**23.95**	**12.96**	**57.63**	**12.26**	**2.14**
C0646-063-2125-M	**0.646**	**16.41**	**0.063**	**1.60**	**2.125**	**53.98**	**0.889**	**22.58**	**0.704**	**17.89**	**16.33**	**72.64**	**13.21**	**2.31**	**C0646-063-2125-S**	**0.997**	**25.33**	**12.96**	**57.63**	**11.49**	**2.01**
C0646-063-2250-M	**0.646**	**16.41**	**0.063**	**1.60**	**2.250**	**57.15**	**0.937**	**23.79**	**0.740**	**18.80**	**16.33**	**72.64**	**12.44**	**2.18**	**C0646-063-2250-S**	**1.052**	**26.72**	**12.96**	**57.63**	**10.81**	**1.89**
C0646-063-2375-M	**0.646**	**16.41**	**0.063**	**1.60**	**2.375**	**60.33**	**0.984**	**25.01**	**0.776**	**19.71**	**16.33**	**72.64**	**11.74**	**2.06**	**C0646-063-2375-S**	**1.106**	**28.10**	**12.96**	**57.63**	**10.21**	**1.79**
C0646-063-2500-M	**0.646**	**16.41**	**0.063**	**1.60**	**2.500**	**63.50**	**1.032**	**26.22**	**0.812**	**20.62**	**16.33**	**72.64**	**11.13**	**1.95**	**C0646-063-2500-S**	**1.161**	**29.48**	**12.96**	**57.63**	**9.67**	**1.69**
C0646-063-2625-M	**0.646**	**16.41**	**0.063**	**1.60**	**2.625**	**66.68**	**1.080**	**27.43**	**0.848**	**21.53**	**16.33**	**72.64**	**10.57**	**1.85**	**C0646-063-2625-S**	**1.215**	**30.87**	**12.96**	**57.63**	**9.19**	**1.61**
C0646-063-2750-M	**0.646**	**16.41**	**0.063**	**1.60**	**2.750**	**69.85**	**1.128**	**28.64**	**0.883**	**22.44**	**16.33**	**72.64**	**10.07**	**1.76**	**C0646-063-2750-S**	**1.270**	**32.25**	**12.96**	**57.63**	**8.75**	**1.53**
C0646-063-2875-M	**0.646**	**16.41**	**0.063**	**1.60**	**2.875**	**73.03**	**1.175**	**29.85**	**0.919**	**23.35**	**16.33**	**72.64**	**9.61**	**1.68**	**C0646-063-2875-S**	**1.324**	**33.64**	**12.96**	**57.63**	**8.35**	**1.46**
C0646-063-3000-M	**0.646**	**16.41**	**0.063**	**1.60**	**3.000**	**76.20**	**1.223**	**31.06**	**0.955**	**24.25**	**16.33**	**72.64**	**9.19**	**1.61**	**C0646-063-3000-S**	**1.379**	**35.02**	**12.96**	**57.63**	**7.99**	**1.40**
C0646-063-3250-M	**0.646**	**16.41**	**0.063**	**1.60**	**3.250**	**82.55**	**1.318**	**33.49**	**1.026**	**26.07**	**16.33**	**72.64**	**8.45**	**1.48**	**C0646-063-3250-S**	**1.488**	**37.79**	**12.96**	**57.63**	**7.35**	**1.29**
C0646-063-3500-M	**0.646**	**16.41**	**0.063**	**1.60**	**3.500**	**88.90**	**1.414**	**35.91**	**1.098**	**27.89**	**16.33**	**72.64**	**7.83**	**1.37**	**C0646-063-3500-S**	**1.597**	**40.56**	**12.96**	**57.63**	**6.81**	**1.19**
C0646-063-3750-M	**0.646**	**16.41**	**0.063**	**1.60**	**3.750**	**95.25**	**1.509**	**38.34**	**1.170**	**29.71**	**16.33**	**72.64**	**7.29**	**1.28**	**C0646-063-3750-S**	**1.706**	**43.32**	**12.96**	**57.63**	**6.34**	**1.11**
C0646-063-4000-M	**0.646**	**16.41**	**0.063**	**1.60**	**4.000**	**101.60**	**1.605**	**40.76**	**1.241**	**31.53**	**16.33**	**72.64**	**6.82**	**1.19**	**C0646-063-4000-S**	**1.815**	**46.09**	**12.96**	**57.63**	**5.93**	**1.04**
C0646-063-4250-M	**0.646**	**16.41**	**0.063**	**1.60**	**4.250**	**107.95**	**1.700**	**43.18**	**1.313**	**33.34**	**16.33**	**72.64**	**6.40**	**1.12**	**C0646-063-4250-S**	**1.924**	**48.86**	**12.96**	**57.63**	**5.57**	**0.97**
C0646-063-4500-M	**0.646**	**16.41**	**0.063**	**1.60**	**4.500**	**114.30**	**1.796**	**45.61**	**1.384**	**35.16**	**16.33**	**72.64**	**6.04**	**1.06**	**C0646-063-4500-S**	**2.033**	**51.63**	**12.96**	**57.63**	**5.25**	**0.92**
C0646-063-4750-M	**0.646**	**16.41**	**0.063**	**1.60**	**4.750**	**120.65**	**1.891**	**48.03**	**1.456**	**36.98**	**16.33**	**72.64**	**5.71**	**1.00**	**C0646-063-4750-S**	**2.142**	**54.40**	**12.96**	**57.63**	**4.97**	**0.87**
C0646-063-5000-M	**0.646**	**16.41**	**0.063**	**1.60**	**5.000**	**127.00**	**1.986**	**50.46**	**1.527**	**38.80**	**16.33**	**72.64**	**5.42**	**0.95**	**C0646-063-5000-S**	**2.251**	**57.16**	**12.96**	**57.63**	**4.71**	**0.82**
C0646-063-5250-M	**0.646**	**16.41**	**0.063**	**1.60**	**5.250**	**133.35**	**2.082**	**52.88**	**1.599**	**40.61**	**16.33**	**72.64**	**5.15**	**0.90**	**C0646-063-5250-S**	**2.359**	**59.93**	**12.96**	**57.63**	**4.48**	**0.78**
C0646-063-5500-M	**0.646**	**16.41**	**0.063**	**1.60**	**5.500**	**139.70**	**2.177**	**55.30**	**1.670**	**42.43**	**16.33**	**72.64**	**4.92**	**0.86**	**C0646-063-5500-S**	**2.468**	**62.70**	**12.96**	**57.63**	**4.27**	**0.75**
C0646-063-5750-M	**0.646**	**16.41**	**0.063**	**1.60**	**5.750**	**146.05**	**2.273**	**57.73**	**1.742**	**44.25**	**16.33**	**72.64**	**4.70**	**0.82**	**C0646-063-5750-S**	**2.577**	**65.47**	**12.96**	**57.63**	**4.08**	**0.71**
C0646-063-6000-M	**0.646**	**16.41**	**0.063**	**1.60**	**6.000**	**152.40**	**2.368**	**60.15**	**1.814**	**46.07**	**16.33**	**72.64**	**4.50**	**0.79**	**C0646-063-6000-S**	**2.686**	**68.23**	**12.96**	**57.63**	**3.91**	**0.68**
C0646-063-6250-M	**0.646**	**16.41**	**0.063**	**1.60**	**6.250**	**158.75**	**2.464**	**62.57**	**1.885**	**47.88**	**16.33**	**72.64**	**4.31**	**0.75**	**C0646-063-6250-S**	**2.795**	**71.00**	**12.96**	**57.63**	**3.75**	**0.66**
C0646-063-6500-M	**0.646**	**16.41**	**0.063**	**1.60**	**6.500**	**165.10**	**2.559**	**65.00**	**1.957**	**49.70**	**16.33**	**72.64**	**4.14**	**0.73**	**C0646-063-6500-S**	**2.904**	**73.77**	**12.96**	**57.63**	**3.60**	**0.63**
C0646-063-6750-M	**0.646**	**16.41**	**0.063**	**1.60**	**6.750**	**171.45**	**2.654**	**67.42**	**2.028**	**51.52**	**16.33**	**72.64**	**3.99**	**0.70**	**C0646-063-6750-S**	**3.013**	**76.54**	**12.96**	**57.63**	**3.47**	**0.61**
C0646-063-7000-M	**0.646**	**16.41**	**0.063**	**1.60**	**7.000**	**177.80**	**2.750**	**69.85**	**2.100**	**53.34**	**16.33**	**72.64**	**3.84**	**0.67**	**C0646-063-7000-S**	**3.122**	**79.31**	**12.96**	**57.63**	**3.34**	**0.58**
C0646-063-7500-M	**0.646**	**16.41**	**0.063**	**1.60**	**7.500**	**190.50**	**2.941**	**74.69**	**2.243**	**56.97**	**16.33**	**72.64**	**3.58**	**0.63**	**C0646-063-7500-S**	**3.340**	**84.84**	**12.96**	**57.63**	**3.11**	**0.54**
C0646-063-8000-M	**0.646**	**16.41**	**0.063**	**1.60**	**8.000**	**203.20**	**3.132**	**79.54**	**2.386**	**60.61**	**16.33**	**72.64**	**3.35**	**0.59**	**C0646-063-8000-S**	**3.558**	**90.38**	**12.96**	**57.63**	**2.92**	**0.51**
C0646-063-8500-M	**0.646**	**16.41**	**0.063**	**1.60**	**8.500**	**215.90**	**3.322**	**84.39**	**2.529**	**64.24**	**16.33**	**72.64**	**3.15**	**0.55**	**C0646-063-8500-S**	**3.776**	**95.91**	**12.96**	**57.63**	**2.74**	**0.48**
C0646-063-9000-M	**0.646**	**16.41**	**0.063**	**1.60**	**9.000**	**228.60**	**3.513**	**89.24**	**2.672**	**67.88**	**16.33**	**72.64**	**2.98**	**0.52**	**C0646-063-9000-S**	**3.994**	**101.45**	**12.96**	**57.63**	**2.59**	**0.45**
C0646-063-9500-M	**0.646**	**16.41**	**0.063**	**1.60**	**9.500**	**241.30**	**3.704**	**94.08**	**2.815**	**71.51**	**16.33**	**72.64**	**2.82**	**0.49**	**C0646-063-9500-S**	**4.212**	**106.99**	**12.96**	**57.63**	**2.45**	**0.43**
C0646-068-1125-M	**0.646**	**16.41**	**0.068**	**1.73**	**1.125**	**28.58**	**0.548**	**13.91**	**0.468**	**11.89**	**20.18**	**89.77**	**34.95**	**6.12**	**C0646-068-1125-S**	**0.599**	**15.22**	**15.98**	**71.08**	**30.39**	**5.32**
C0646-068-1250-M	**0.646**	**16.41**	**0.068**	**1.73**	**1.250**	**31.75**	**0.600**	**15.23**	**0.509**	**12.93**	**20.18**	**89.77**	**31.03**	**5.43**	**C0646-068-1250-S**	**0.658**	**16.71**	**15.98**	**71.08**	**26.98**	**4.72**
C0646-068-1375-M	**0.646**	**16.41**	**0.068**	**1.73**	**1.375**	**34.93**	**0.652**	**16.55**	**0.550**	**13.97**	**20.18**	**89.77**	**27.90**	**4.88**	**C0646-068-1375-S**	**0.716**	**18.19**	**15.98**	**71.08**	**24.26**	**4.25**
C0646-068-1500-M	**0.646**	**16.41**	**0.068**	**1.73**	**1.500**	**38.10**	**0.704**	**17.87**	**0.591**	**15.02**	**20.18**	**89.77**	**25.34**	**4.43**	**C0646-068-1500-S**	**0.775**	**19.68**	**15.98**	**71.08**	**22.04**	**3.86**
C0646-068-1625-M	**0.646**	**16.41**	**0.068**	**1.73**	**1.625**	**41.28**	**0.756**	**19.19**	**0.632**	**16.06**	**20.18**	**89.77**	**23.22**	**4.06**	**C0646-068-1625-S**	**0.833**	**21.17**	**15.98**	**71.08**	**20.19**	**3.53**
C0646-068-1750-M	**0.646**	**16.41**	**0.068**	**1.73**	**1.750**	**44.45**	**0.808**	**20.51**	**0.673**	**17.11**	**20.18**	**89.77**	**21.42**	**3.75**	**C0646-068-1750-S**	**0.892**	**22.66**	**15.98**	**71.08**	**18.62**	**3.26**
C0646-068-1875-M	**0.646**	**16.41**	**0.068**	**1.73**	**1.875**	**47.63**	**0.860**	**21.84**	**0.715**	**18.15**	**20.18**	**89.77**	**19.88**	**3.48**	**C0646-068-1875-S**	**0.950**	**24.14**	**15.98**	**71.08**	**17.29**	**3.02**
C0646-068-2000-M	**0.646**	**16.41**	**0.068**	**1.73**	**2.000**	**50.80**	**0.912**	**23.16**	**0.756**	**19.19**	**20.18**	**89.77**	**18.54**	**3.25**	**C0646-068-2000-S**	**1.009**	**25.63**	**15.98**	**71.08**	**16.13**	**2.82**
C0646-068-2125-M	**0.646**	**16.41**	**0.068**	**1.73**	**2.125**	**53.98**	**0.964**	**24.48**	**0.797**	**20.24**	**20.18**	**89.77**	**17.38**	**3.04**	**C0646-068-2125-S**	**1.068**	**27.12**	**15.98**	**71.08**	**15.11**	**2.64**
C0646-068-2250-M	**0.646**	**16.41**	**0.068**	**1.73**	**2.250**	**57.15**	**1.016**	**25.80**	**0.838**	**21.28**	**20.18**	**89.77**	**16.35**	**2.86**	**C0646-068-2250-S**	**1.126**	**28.60**	**15.98**	**71.08**	**14.22**	**2.49**
C0646-068-2375-M	**0.646**	**16.41**	**0.068**	**1.73**	**2.375**	**60.33**	**1.068**	**27.12**	**0.879**	**22.32**	**20.18**	**89.77**	**15.44**	**2.70**	**C0646-068-2375-S**	**1.185**	**30.09**	**15.98**	**71.08**	**13.43**	**2.35**
C0646-068-2500-M	**0.646**	**16.41**	**0.068**	**1.73**	**2.500**	**63.50**	**1.120**	**28.44**	**0.920**	**23.37**	**20.18**	**89.77**	**14.62**	**2.56**	**C0646-068-2500-S**	**1.243**	**31.58**	**15.98**	**71.08**	**12.72**	**2.23**
C0646-068-2625-M	**0.646**	**16.41**	**0.068**	**1.73**	**2.625**	**66.68**	**1.172**	**29.76**	**0.961**	**24.41**	**20.18**	**89.77**	**13.89**	**2.43**	**C0646-068-2625-S**	**1.302**	**33.06**	**15.98**	**71.08**	**12.08**	**2.11**

Part Numbers with an "*" are squared and not ground. **Part Numbers in bold** represent the newly expanded Associated Spring RAYMOND compression spring offering.

MUSIC WIRE															STAINLESS STEEL						
Catalog #	Outside Diameter (OD)		Wire Diameter (d)		Free Length (L) Approx		Load Length (L_1)		Solid Height (Sh) Approx		Load (P) at L_1		Spring Rate (R)		Catalog #	Load Length (L_1)		Load (P) at L_1		Spring Rate (R)	
	in	mm	in	mm	in	mm	in	mm	in	mm	lb	N	lb/in	N/mm		in	mm	lb	N	lb/in	N/mm
C0646-068-2750-M	0.646	16.41	0.068	1.73	2.750	69.85	1.224	31.09	1.002	25.46	20.18	89.77	13.22	2.31	**C0646-068-2750-S**	1.360	34.55	15.98	71.08	11.50	2.01
C0646-068-2875-M	0.646	16.41	0.068	1.73	2.875	73.03	1.276	32.41	1.043	26.50	20.18	89.77	12.62	2.21	**C0646-068-2875-S**	1.419	36.04	15.98	71.08	10.97	1.92
C0646-068-3000-M	0.646	16.41	0.068	1.73	3.000	76.20	1.328	33.73	1.084	27.54	20.18	89.77	12.07	2.11	**C0646-068-3000-S**	1.477	37.53	15.98	71.08	10.50	1.84
C0646-068-3250-M	0.646	16.41	0.068	1.73	3.250	82.55	1.432	36.37	1.167	29.63	20.18	89.77	11.10	1.94	**C0646-068-3250-S**	1.594	40.50	15.98	71.08	9.65	1.69
C0646-068-3500-M	0.646	16.41	0.068	1.73	3.500	88.90	1.536	39.01	1.249	31.72	20.18	89.77	10.28	1.80	**C0646-068-3500-S**	1.712	43.47	15.98	71.08	8.94	1.56
C0646-068-3750-M	0.646	16.41	0.068	1.73	3.750	95.25	1.640	41.66	1.331	33.81	20.18	89.77	9.57	1.67	**C0646-068-3750-S**	1.829	46.45	15.98	71.08	8.32	1.46
C0646-068-4000-M	0.646	16.41	0.068	1.73	4.000	101.60	1.744	44.30	1.413	35.90	20.18	89.77	8.95	1.57	**C0646-068-4000-S**	1.946	49.42	15.98	71.08	7.78	1.36
C0646-068-4250-M	0.646	16.41	0.068	1.73	4.250	107.95	1.848	46.94	1.495	37.98	20.18	89.77	8.40	1.47	**C0646-068-4250-S**	2.063	52.40	15.98	71.08	7.31	1.28
C0646-068-4500-M	0.646	16.41	0.068	1.73	4.500	114.30	1.952	49.58	1.578	40.07	20.18	89.77	7.92	1.39	**C0646-068-4500-S**	2.180	55.37	15.98	71.08	6.89	1.21
C0646-068-4750-M	0.646	16.41	0.068	1.73	4.750	120.65	2.056	52.23	1.660	42.16	20.18	89.77	7.49	1.31	**C0646-068-4750-S**	2.297	58.34	15.98	71.08	6.51	1.14
C0646-068-5000-M	0.646	16.41	0.068	1.73	5.000	127.00	2.160	54.87	1.742	44.25	20.18	89.77	7.11	1.24	**C0646-068-5000-S**	2.414	61.32	15.98	71.08	6.18	1.08
C0646-068-5250-M	0.646	16.41	0.068	1.73	5.250	133.35	2.264	57.51	1.824	46.33	20.18	89.77	6.76	1.18	**C0646-068-5250-S**	2.531	64.29	15.98	71.08	5.88	1.03
C0646-068-5500-M	0.646	16.41	0.068	1.73	5.500	139.70	2.368	60.15	1.906	48.42	20.18	89.77	6.44	1.13	**C0646-068-5500-S**	2.648	67.27	15.98	71.08	5.60	0.98
C0646-068-5750-M	0.646	16.41	0.068	1.73	5.750	146.05	2.472	62.80	1.989	50.51	20.18	89.77	6.16	1.08	**C0646-068-5750-S**	2.765	70.24	15.98	71.08	5.35	0.94
C0646-068-6000-M	0.646	16.41	0.068	1.73	6.000	152.40	2.576	65.44	2.071	52.60	20.18	89.77	5.90	1.03	**C0646-068-6000-S**	2.882	73.22	15.98	71.08	5.13	0.90
C0646-068-6250-M	0.646	16.41	0.068	1.73	6.250	158.75	2.680	68.08	2.153	54.68	20.18	89.77	5.65	0.99	**C0646-068-6250-S**	3.000	76.19	15.98	71.08	4.92	0.86
C0646-068-6500-M	0.646	16.41	0.068	1.73	6.500	165.10	2.784	70.72	2.235	56.77	20.18	89.77	5.43	0.95	**C0646-068-6500-S**	3.117	79.16	15.98	71.08	4.72	0.83
C0646-068-6750-M	0.646	16.41	0.068	1.73	6.750	171.45	2.888	73.37	2.317	58.86	20.18	89.77	5.23	0.91	**C0646-068-6750-S**	3.234	82.14	15.98	71.08	4.55	0.80
C0646-068-7000-M	0.646	16.41	0.068	1.73	7.000	177.80	2.992	76.01	2.400	60.95	20.18	89.77	5.04	0.88	**C0646-068-7000-S**	3.351	85.11	15.98	71.08	4.38	0.77
C0646-068-7500-M	0.646	16.41	0.068	1.73	7.500	190.50	3.201	81.29	2.564	65.12	20.18	89.77	4.69	0.82	**C0646-068-7500-S**	3.585	91.06	15.98	71.08	4.08	0.71
C0646-068-8000-M	0.646	16.41	0.068	1.73	8.000	203.20	3.409	86.58	2.728	69.30	20.18	89.77	4.40	0.77	**C0646-068-8000-S**	3.819	97.01	15.98	71.08	3.82	0.67
C0646-068-8500-M	0.646	16.41	0.068	1.73	8.500	215.90	3.617	91.86	2.893	73.47	20.18	89.77	4.13	0.72	**C0646-068-8500-S**	4.053	102.96	15.98	71.08	3.59	0.63
C0646-068-9000-M	0.646	16.41	0.068	1.73	9.000	228.60	3.825	97.15	3.057	77.65	20.18	89.77	3.90	0.68	**C0646-068-9000-S**	4.288	108.90	15.98	71.08	3.39	0.59
C0646-068-9500-M	0.646	16.41	0.068	1.73	9.500	241.30	4.033	102.43	3.221	81.83	20.18	89.77	3.69	0.65	**C0646-068-9500-S**	4.522	114.85	15.98	71.08	3.21	0.56
C0646-072-1000-M	0.646	16.41	0.072	1.83	1.000	25.40	0.524	13.31	0.462	11.74	23.64	105.15	49.67	8.69	**C0646-072-1000-S**	0.567	14.41	18.68	83.11	43.19	7.56
C0646-072-1125-M	0.646	16.41	0.072	1.83	1.125	28.58	0.580	14.72	0.508	12.89	23.64	105.15	43.34	7.58	**C0646-072-1125-S**	0.629	15.98	18.68	83.11	37.69	6.60
C0646-072-1250-M	0.646	16.41	0.072	1.83	1.250	31.75	0.635	16.13	0.553	14.04	23.64	105.15	38.44	6.73	**C0646-072-1250-S**	0.691	17.55	18.68	83.11	33.43	5.85
C0646-072-1375-M	0.646	16.41	0.072	1.83	1.375	34.93	0.691	17.54	0.598	15.20	23.64	105.15	34.54	6.04	**C0646-072-1375-S**	0.753	19.12	18.68	83.11	30.03	5.26
C0646-072-1500-M	0.646	16.41	0.072	1.83	1.500	38.10	0.746	18.95	0.644	16.35	23.64	105.15	31.36	5.49	**C0646-072-1500-S**	0.815	20.69	18.68	83.11	27.27	4.77
C0646-072-1625-M	0.646	16.41	0.072	1.83	1.625	41.28	0.802	20.36	0.689	17.50	23.64	105.15	28.71	5.02	**C0646-072-1625-S**	0.877	22.27	18.68	83.11	24.96	4.37
C0646-072-1750-M	0.646	16.41	0.072	1.83	1.750	44.45	0.857	21.77	0.735	18.66	23.64	105.15	26.47	4.63	**C0646-072-1750-S**	0.938	23.84	18.68	83.11	23.02	4.03
C0646-072-1875-M	0.646	16.41	0.072	1.83	1.875	47.63	0.913	23.18	0.780	19.81	23.64	105.15	24.56	4.30	**C0646-072-1875-S**	1.000	25.41	18.68	83.11	21.36	3.74
C0646-072-2000-M	0.646	16.41	0.072	1.83	2.000	50.80	0.968	24.59	0.825	20.96	23.64	105.15	22.91	4.01	**C0646-072-2000-S**	1.062	26.98	18.68	83.11	19.92	3.49
C0646-072-2125-M	0.646	16.41	0.072	1.83	2.125	53.98	1.024	26.00	0.871	22.12	23.64	105.15	21.46	3.76	**C0646-072-2125-S**	1.124	28.55	18.68	83.11	18.66	3.27
C0646-072-2250-M	0.646	16.41	0.072	1.83	2.250	57.15	1.079	27.41	0.916	23.27	23.64	105.15	20.19	3.53	**C0646-072-2250-S**	1.186	30.12	18.68	83.11	17.56	3.07
C0646-072-2375-M	0.646	16.41	0.072	1.83	2.375	60.33	1.135	28.82	0.962	24.42	23.64	105.15	19.06	3.34	**C0646-072-2375-S**	1.248	31.69	18.68	83.11	16.57	2.90
C0646-072-2500-M	0.646	16.41	0.072	1.83	2.500	63.50	1.190	30.23	1.007	25.58	23.64	105.15	18.05	3.16	**C0646-072-2500-S**	1.309	33.26	18.68	83.11	15.69	2.75
C0646-072-2625-M	0.646	16.41	0.072	1.83	2.625	66.68	1.246	31.64	1.052	26.73	23.64	105.15	17.14	3.00	**C0646-072-2625-S**	1.371	34.83	18.68	83.11	14.90	2.61
C0646-072-2750-M	0.646	16.41	0.072	1.83	2.750	69.85	1.301	33.05	1.098	27.88	23.64	105.15	16.32	2.86	**C0646-072-2750-S**	1.433	36.40	18.68	83.11	14.19	2.48
C0646-072-2875-M	0.646	16.41	0.072	1.83	2.875	73.03	1.357	34.46	1.143	29.04	23.64	105.15	15.57	2.72	**C0646-072-2875-S**	1.495	37.97	18.68	83.11	13.54	2.37
C0646-072-3000-M	0.646	16.41	0.072	1.83	3.000	76.20	1.412	35.87	1.189	30.19	23.64	105.15	14.89	2.61	**C0646-072-3000-S**	1.557	39.54	18.68	83.11	12.95	2.27
C0646-072-3250-M	0.646	16.41	0.072	1.83	3.250	82.55	1.523	38.69	1.279	32.49	23.64	105.15	13.69	2.40	**C0646-072-3250-S**	1.680	42.68	18.68	83.11	11.90	2.08
C0646-072-3500-M	0.646	16.41	0.072	1.83	3.500	88.90	1.634	41.51	1.370	34.80	23.64	105.15	12.67	2.22	**C0646-072-3500-S**	1.804	45.82	18.68	83.11	11.02	1.93
C0646-072-3750-M	0.646	16.41	0.072	1.83	3.750	95.25	1.745	44.33	1.461	37.11	23.64	105.15	11.79	2.06	**C0646-072-3750-S**	1.928	48.96	18.68	83.11	10.25	1.79
C0646-072-4000-M	0.646	16.41	0.072	1.83	4.000	101.60	1.856	47.15	1.552	39.41	23.64	105.15	11.03	1.93	**C0646-072-4000-S**	2.051	52.11	18.68	83.11	9.59	1.68
C0646-072-4250-M	0.646	16.41	0.072	1.83	4.250	107.95	1.967	49.97	1.643	41.72	23.64	105.15	10.36	1.81	**C0646-072-4250-S**	2.175	55.25	18.68	83.11	9.00	1.58
C0646-072-4500-M	0.646	16.41	0.072	1.83	4.500	114.30	2.078	52.79	1.733	44.03	23.64	105.15	9.76	1.71	**C0646-072-4500-S**	2.299	58.39	18.68	83.11	8.49	1.49
C0646-072-4750-M	0.646	16.41	0.072	1.83	4.750	120.65	2.189	55.61	1.824	46.33	23.64	105.15	9.23	1.62	**C0646-072-4750-S**	2.422	61.53	18.68	83.11	8.03	1.40
C0646-072-5000-M	0.646	16.41	0.072	1.83	5.000	127.00	2.300	58.42	1.915	48.64	23.64	105.15	8.76	1.53	**C0646-072-5000-S**	2.546	64.67	18.68	83.11	7.61	1.33
C0646-072-5250-M	0.646	16.41	0.072	1.83	5.250	133.35	2.411	61.24	2.006	50.95	23.64	105.15	8.33	1.46	**C0646-072-5250-S**	2.670	67.81	18.68	83.11	7.24	1.27
C0646-072-5500-M	0.646	16.41	0.072	1.83	5.500	139.70	2.522	64.06	2.097	53.25	23.64	105.15	7.94	1.39	**C0646-072-5500-S**	2.793	70.95	18.68	83.11	6.90	1.21
C0646-072-5750-M	0.646	16.41	0.072	1.83	5.750	146.05	2.633	66.88	2.187	55.56	23.64	105.15	7.58	1.33	**C0646-072-5750-S**	2.917	74.09	18.68	83.11	6.60	1.15
C0646-072-6000-M	0.646	16.41	0.072	1.83	6.000	152.40	2.744	69.70	2.278	57.86	23.64	105.15	7.26	1.27	**C0646-072-6000-S**	3.041	77.23	18.68	83.11	6.31	1.10
C0646-072-6250-M	0.646	16.41	0.072	1.83	6.250	158.75	2.855	72.52	2.369	60.17	23.64	105.15	6.96	1.22	**C0646-072-6250-S**	3.164	80.38	18.68	83.11	6.06	1.06
C0646-072-6500-M	0.646	16.41	0.072	1.83	6.500	165.10	2.966	75.34	2.460	62.48	23.64	105.15	6.69	1.17	**C0646-072-6500-S**	3.288	83.52	18.68	83.11	5.82	1.02
C0646-072-6750-M	0.646	16.41	0.072	1.83	6.750	171.45	3.077	78.16	2.551	64.78	23.64	105.15	6.44	1.13	**C0646-072-6750-S**	3.412	86.66	18.68	83.11	5.60	0.98
C0646-072-7000-M	0.646	16.41	0.072	1.83	7.000	177.80	3.188	80.98	2.641	67.09	23.64	105.15	6.20	1.09	**C0646-072-7000-S**	3.535	89.80	18.68	83.11	5.39	0.94
C0646-072-7500-M	0.646	16.41	0.072	1.83	7.500	190.50	3.410	86.62	2.823	71.70	23.64	105.15	5.78	1.01	**C0646-072-7500-S**	3.783	96.08	18.68	83.11	5.03	0.88
C0646-072-8000-M	0.646	16.41	0.072	1.83	8.000	203.20	3.632	92.26	3.005	76.32	23.64	105.15	5.41	0.95	**C0646-072-8000-S**	4.030	102.36	18.68	83.11	4.71	0.82
C0646-072-8500-M	0.646	16.41	0.072	1.83	8.500	215.90	3.854	97.90	3.186	80.93	23.64	105.15	5.09	0.89	**C0646-072-8500-S**	4.277	108.65	18.68	83.11	4.43	0.77
C0646-072-9000-M	0.646	16.41	0.072	1.83	9.000	228.60	4.076	103.54	3.368	85.54	23.64	105.15	4.80	0.84	**C0646-072-9000-S**	4.525	114.93	18.68	83.11	4.18	0.73
C0646-072-9500-M	0.646	16.41	0.072	1.83	9.500	241.30	4.298	109.18	3.549	90.15	23.64	105.15	4.54	0.80	**C0646-072-9500-S**	4.772	121.21	18.68	83.11	3.95	0.69
C0646-085-0938-M	0.646	16.41	0.085	2.16	0.938	23.81	0.580	14.72	0.542	13.77	37.34	166.08	104.30	18.25	**C0646-085-0938-S**	0.614	15.61	29.30	130.34	90.70	15.87
C0646-085-1000-M	0.646	16.41	0.085	2.16	1.000	25.40	0.613	15.57	0.572	14.52	37.34	166.08	96.45	16.88	**C0646-085-1000-S**	0.651	16.53	29.30	130.34	83.87	14.68

FOR INFORMATION ON ALTERNATIVE FINISHES, SEE PAGE 311

Part Numbers with an "*" are squared and not ground. **Part Numbers in bold** represent the newly expanded Associated Spring RAYMOND compression spring offering.

MUSIC WIRE															STAINLESS STEEL						
Catalog #	Outside Diameter (OD)		Wire Diameter (d)		Free Length (L) Approx		Load Length (L_1)		Solid Height (Sh) Approx		Load (P) at L_1		Spring Rate (R)		Catalog #	Load Length (L_1)		Load (P) at L_1		Spring Rate (R)	
	in	mm	in	mm	in	mm	in	mm	in	mm	lb	N	lb/in	N/mm		in	mm	lb	N	lb/in	N/mm
C0646-085-1125-M	**0.646**	**16.41**	**0.085**	**2.16**	**1.125**	**28.58**	**0.680**	**17.26**	**0.631**	**16.03**	**37.34**	**166.08**	**83.82**	**14.67**	**C0646-085-1125-S**	**0.723**	**18.36**	**29.30**	**130.34**	**72.89**	**12.76**
C0646-085-1250-M	**0.646**	**16.41**	**0.085**	**2.16**	**1.250**	**31.75**	**0.746**	**18.96**	**0.690**	**17.53**	**37.34**	**166.08**	**74.12**	**12.97**	**C0646-085-1250-S**	**0.795**	**20.20**	**29.30**	**130.34**	**64.45**	**11.28**
C0646-085-1375-M	**0.646**	**16.41**	**0.085**	**2.16**	**1.375**	**34.93**	**0.813**	**20.65**	**0.749**	**19.04**	**37.34**	**166.08**	**66.43**	**11.63**	**C0646-085-1375-S**	**0.868**	**22.04**	**29.30**	**130.34**	**57.77**	**10.11**
C0646-085-1500-M	**0.646**	**16.41**	**0.085**	**2.16**	**1.500**	**38.10**	**0.880**	**22.34**	**0.809**	**20.54**	**37.34**	**166.08**	**60.19**	**10.53**	**C0646-085-1500-S**	**0.940**	**23.88**	**29.30**	**130.34**	**52.34**	**9.16**
C0646-085-1625-M	**0.646**	**16.41**	**0.085**	**2.16**	**1.625**	**41.28**	**0.946**	**24.04**	**0.868**	**22.05**	**37.34**	**166.08**	**55.02**	**9.63**	**C0646-085-1625-S**	**1.013**	**25.72**	**29.30**	**130.34**	**47.84**	**8.37**
C0646-085-1750-M	**0.646**	**16.41**	**0.085**	**2.16**	**1.750**	**44.45**	**1.013**	**25.73**	**0.927**	**23.55**	**37.34**	**166.08**	**50.66**	**8.87**	**C0646-085-1750-S**	**1.085**	**27.56**	**29.30**	**130.34**	**44.06**	**7.71**
C0646-085-1875-M	**0.646**	**16.41**	**0.085**	**2.16**	**1.875**	**47.63**	**1.080**	**27.43**	**0.986**	**25.06**	**37.34**	**166.08**	**46.95**	**8.22**	**C0646-085-1875-S**	**1.157**	**29.39**	**29.30**	**130.34**	**40.83**	**7.14**
C0646-085-2000-M	**0.646**	**16.41**	**0.085**	**2.16**	**2.000**	**50.80**	**1.146**	**29.12**	**1.046**	**26.56**	**37.34**	**166.08**	**43.74**	**7.66**	**C0646-085-2000-S**	**1.230**	**31.23**	**29.30**	**130.34**	**38.04**	**6.66**
C0646-085-2125-M	**0.646**	**16.41**	**0.085**	**2.16**	**2.125**	**53.98**	**1.213**	**30.81**	**1.105**	**28.06**	**37.34**	**166.08**	**40.95**	**7.17**	**C0646-085-2125-S**	**1.302**	**33.07**	**29.30**	**130.34**	**35.61**	**6.23**
C0646-085-2250-M	**0.646**	**16.41**	**0.085**	**2.16**	**2.250**	**57.15**	**1.280**	**32.51**	**1.164**	**29.57**	**37.34**	**166.08**	**38.49**	**6.73**	**C0646-085-2250-S**	**1.374**	**34.91**	**29.30**	**130.34**	**33.47**	**5.86**
C0646-085-2375-M	**0.646**	**16.41**	**0.085**	**2.16**	**2.375**	**60.33**	**1.347**	**34.20**	**1.223**	**31.07**	**37.34**	**166.08**	**36.30**	**6.35**	**C0646-085-2375-S**	**1.447**	**36.75**	**29.30**	**130.34**	**31.57**	**5.52**
C0646-085-2500-M	**0.646**	**16.41**	**0.085**	**2.16**	**2.500**	**63.50**	**1.413**	**35.90**	**1.283**	**32.58**	**37.34**	**166.08**	**34.36**	**6.01**	**C0646-085-2500-S**	**1.519**	**38.59**	**29.30**	**130.34**	**29.88**	**5.23**
C0646-085-2625-M	**0.646**	**16.41**	**0.085**	**2.16**	**2.625**	**66.68**	**1.480**	**37.59**	**1.342**	**34.08**	**37.34**	**166.08**	**32.61**	**5.71**	**C0646-085-2625-S**	**1.592**	**40.43**	**29.30**	**130.34**	**28.35**	**4.96**
C0646-085-2750-M	**0.646**	**16.41**	**0.085**	**2.16**	**2.750**	**69.85**	**1.547**	**39.29**	**1.401**	**35.59**	**37.34**	**166.08**	**31.03**	**5.43**	**C0646-085-2750-S**	**1.664**	**42.26**	**29.30**	**130.34**	**26.98**	**4.72**
C0646-085-2875-M	**0.646**	**16.41**	**0.085**	**2.16**	**2.875**	**73.03**	**1.613**	**40.98**	**1.460**	**37.09**	**37.34**	**166.08**	**29.59**	**5.18**	**C0646-085-2875-S**	**1.736**	**44.10**	**29.30**	**130.34**	**25.73**	**4.50**
C0646-085-3000-M	**0.646**	**16.41**	**0.085**	**2.16**	**3.000**	**76.20**	**1.680**	**42.67**	**1.520**	**38.60**	**37.34**	**166.08**	**28.29**	**4.95**	**C0646-085-3000-S**	**1.809**	**45.94**	**29.30**	**130.34**	**24.60**	**4.30**
C0646-085-3250-M	**0.646**	**16.41**	**0.085**	**2.16**	**3.250**	**82.55**	**1.813**	**46.06**	**1.638**	**41.60**	**37.34**	**166.08**	**25.99**	**4.55**	**C0646-085-3250-S**	**1.953**	**49.62**	**29.30**	**130.34**	**22.60**	**3.96**
C0646-085-3500-M	**0.646**	**16.41**	**0.085**	**2.16**	**3.500**	**88.90**	**1.947**	**49.45**	**1.756**	**44.61**	**37.34**	**166.08**	**24.04**	**4.21**	**C0646-085-3500-S**	**2.098**	**53.29**	**29.30**	**130.34**	**20.90**	**3.66**
C0646-085-3750-M	**0.646**	**16.41**	**0.085**	**2.16**	**3.750**	**95.25**	**2.080**	**52.84**	**1.875**	**47.62**	**37.34**	**166.08**	**22.36**	**3.91**	**C0646-085-3750-S**	**2.243**	**56.97**	**29.30**	**130.34**	**19.44**	**3.40**
C0646-085-4000-M	**0.646**	**16.41**	**0.085**	**2.16**	**4.000**	**101.60**	**2.214**	**56.23**	**1.993**	**50.63**	**37.34**	**166.08**	**20.90**	**3.66**	**C0646-085-4000-S**	**2.388**	**60.65**	**29.30**	**130.34**	**18.17**	**3.18**
C0646-085-4250-M	**0.646**	**16.41**	**0.085**	**2.16**	**4.250**	**107.95**	**2.347**	**59.62**	**2.112**	**53.64**	**37.34**	**166.08**	**19.62**	**3.43**	**C0646-085-4250-S**	**2.532**	**64.33**	**29.30**	**130.34**	**17.06**	**2.99**
C0646-085-4500-M	**0.646**	**16.41**	**0.085**	**2.16**	**4.500**	**114.30**	**2.480**	**63.00**	**2.230**	**56.65**	**37.34**	**166.08**	**18.49**	**3.24**	**C0646-085-4500-S**	**2.677**	**68.00**	**29.30**	**130.34**	**16.08**	**2.81**
C0646-085-4750-M	**0.646**	**16.41**	**0.085**	**2.16**	**4.750**	**120.65**	**2.614**	**66.39**	**2.349**	**59.66**	**37.34**	**166.08**	**17.48**	**3.06**	**C0646-085-4750-S**	**2.822**	**71.68**	**29.30**	**130.34**	**15.20**	**2.66**
C0646-085-5000-M	**0.646**	**16.41**	**0.085**	**2.16**	**5.000**	**127.00**	**2.747**	**69.78**	**2.467**	**62.67**	**37.34**	**166.08**	**16.57**	**2.90**	**C0646-085-5000-S**	**2.967**	**75.36**	**29.30**	**130.34**	**14.41**	**2.52**
C0646-085-5250-M	**0.646**	**16.41**	**0.085**	**2.16**	**5.250**	**133.35**	**2.881**	**73.17**	**2.586**	**65.68**	**37.34**	**166.08**	**15.76**	**2.76**	**C0646-085-5250-S**	**3.112**	**79.03**	**29.30**	**130.34**	**13.70**	**2.40**
C0646-085-5500-M	**0.646**	**16.41**	**0.085**	**2.16**	**5.500**	**139.70**	**3.014**	**76.56**	**2.704**	**68.69**	**37.34**	**166.08**	**15.02**	**2.63**	**C0646-085-5500-S**	**3.256**	**82.71**	**29.30**	**130.34**	**13.06**	**2.29**
C0646-085-5750-M	**0.646**	**16.41**	**0.085**	**2.16**	**5.750**	**146.05**	**3.147**	**79.95**	**2.823**	**71.69**	**37.34**	**166.08**	**14.35**	**2.51**	**C0646-085-5750-S**	**3.401**	**86.39**	**29.30**	**130.34**	**12.48**	**2.18**
C0646-085-6000-M	**0.646**	**16.41**	**0.085**	**2.16**	**6.000**	**152.40**	**3.281**	**83.33**	**2.941**	**74.70**	**37.34**	**166.08**	**13.73**	**2.40**	**C0646-085-6000-S**	**3.546**	**90.06**	**29.30**	**130.34**	**11.94**	**2.09**
C0646-085-6250-M	**0.646**	**16.41**	**0.085**	**2.16**	**6.250**	**158.75**	**3.414**	**86.72**	**3.060**	**77.71**	**37.34**	**166.08**	**13.17**	**2.30**	**C0646-085-6250-S**	**3.691**	**93.74**	**29.30**	**130.34**	**11.45**	**2.00**
C0646-085-6500-M	**0.646**	**16.41**	**0.085**	**2.16**	**6.500**	**165.10**	**3.548**	**90.11**	**3.178**	**80.72**	**37.34**	**166.08**	**12.65**	**2.21**	**C0646-085-6500-S**	**3.835**	**97.42**	**29.30**	**130.34**	**11.00**	**1.92**
C0646-085-6750-M	**0.646**	**16.41**	**0.085**	**2.16**	**6.750**	**171.45**	**3.681**	**93.50**	**3.296**	**83.73**	**37.34**	**166.08**	**12.17**	**2.13**	**C0646-085-6750-S**	**3.980**	**101.09**	**29.30**	**130.34**	**10.58**	**1.85**
C0646-085-7000-M	**0.646**	**16.41**	**0.085**	**2.16**	**7.000**	**177.80**	**3.814**	**96.89**	**3.415**	**86.74**	**37.34**	**166.08**	**11.72**	**2.05**	**C0646-085-7000-S**	**4.125**	**104.77**	**29.30**	**130.34**	**10.19**	**1.78**
C0646-085-7500-M	**0.646**	**16.41**	**0.085**	**2.16**	**7.500**	**190.50**	**4.081**	**103.66**	**3.652**	**92.76**	**37.34**	**166.08**	**10.92**	**1.91**	**C0646-085-7500-S**	**4.414**	**112.13**	**29.30**	**130.34**	**9.50**	**1.66**
C0646-085-8000-M	**0.646**	**16.41**	**0.085**	**2.16**	**8.000**	**203.20**	**4.348**	**110.44**	**3.889**	**98.77**	**37.34**	**166.08**	**10.22**	**1.79**	**C0646-085-8000-S**	**4.704**	**119.48**	**29.30**	**130.34**	**8.89**	**1.56**
C0646-085-8500-M	**0.646**	**16.41**	**0.085**	**2.16**	**8.500**	**215.90**	**4.615**	**117.22**	**4.126**	**104.79**	**37.34**	**166.08**	**9.61**	**1.68**	**C0646-085-8500-S**	**4.993**	**126.83**	**29.30**	**130.34**	**8.36**	**1.46**
C0646-085-9000-M	**0.646**	**16.41**	**0.085**	**2.16**	**9.000**	**228.60**	**4.882**	**123.99**	**4.363**	**110.81**	**37.34**	**166.08**	**9.07**	**1.59**	**C0646-085-9000-S**	**5.283**	**134.19**	**29.30**	**130.34**	**7.88**	**1.38**
C0646-085-9500-M	**0.646**	**16.41**	**0.085**	**2.16**	**9.500**	**241.30**	**5.148**	**130.77**	**4.600**	**116.83**	**37.34**	**166.08**	**8.58**	**1.50**	**C0646-085-9500-S**	**5.572**	**141.54**	**29.30**	**130.34**	**7.46**	**1.31**
C0646-092-0938-M	**0.646**	**16.41**	**0.092**	**2.34**	**0.938**	**23.81**	**0.621**	**15.77**	**0.593**	**15.06**	**46.36**	**206.23**	**146.34**	**25.61**	**C0646-092-0938-S**	**0.653**	**16.58**	**36.23**	**161.16**	**127.25**	**22.27**
C0646-092-1000-M	**0.646**	**16.41**	**0.092**	**2.34**	**1.000**	**25.40**	**0.657**	**16.69**	**0.626**	**15.90**	**46.36**	**206.23**	**135.13**	**23.65**	**C0646-092-1000-S**	**0.692**	**17.57**	**36.23**	**161.16**	**117.50**	**20.56**
C0646-092-1125-M	**0.646**	**16.41**	**0.092**	**2.34**	**1.125**	**28.58**	**0.729**	**18.53**	**0.692**	**17.59**	**46.36**	**206.23**	**117.18**	**20.51**	**C0646-092-1125-S**	**0.769**	**19.54**	**36.23**	**161.16**	**101.90**	**17.83**
C0646-092-1250-M	**0.646**	**16.41**	**0.092**	**2.34**	**1.250**	**31.75**	**0.802**	**20.37**	**0.759**	**19.27**	**46.36**	**206.23**	**103.44**	**18.10**	**C0646-092-1250-S**	**0.847**	**21.52**	**36.23**	**161.16**	**89.95**	**15.74**
C0646-092-1375-M	**0.646**	**16.41**	**0.092**	**2.34**	**1.375**	**34.93**	**0.874**	**22.21**	**0.825**	**20.96**	**46.36**	**206.23**	**92.58**	**16.20**	**C0646-092-1375-S**	**0.925**	**23.49**	**36.23**	**161.16**	**80.51**	**14.09**
C0646-092-1500-M	**0.646**	**16.41**	**0.092**	**2.34**	**1.500**	**38.10**	**0.947**	**24.05**	**0.891**	**22.64**	**46.36**	**206.23**	**83.79**	**14.66**	**C0646-092-1500-S**	**1.003**	**25.47**	**36.23**	**161.16**	**72.86**	**12.75**
C0646-092-1625-M	**0.646**	**16.41**	**0.092**	**2.34**	**1.625**	**41.28**	**1.019**	**25.89**	**0.958**	**24.33**	**46.36**	**206.23**	**76.52**	**13.39**	**C0646-092-1625-S**	**1.080**	**27.44**	**36.23**	**161.16**	**66.54**	**11.64**
C0646-092-1750-M	**0.646**	**16.41**	**0.092**	**2.34**	**1.750**	**44.45**	**1.092**	**27.73**	**1.024**	**26.01**	**46.36**	**206.23**	**70.41**	**12.32**	**C0646-092-1750-S**	**1.158**	**29.42**	**36.23**	**161.16**	**61.23**	**10.71**
C0646-092-1875-M	**0.646**	**16.41**	**0.092**	**2.34**	**1.875**	**47.63**	**1.164**	**29.57**	**1.090**	**27.70**	**46.36**	**206.23**	**65.21**	**11.41**	**C0646-092-1875-S**	**1.236**	**31.40**	**36.23**	**161.16**	**56.70**	**9.92**
C0646-092-2000-M	**0.646**	**16.41**	**0.092**	**2.34**	**2.000**	**50.80**	**1.236**	**31.41**	**1.157**	**29.38**	**46.36**	**206.23**	**60.72**	**10.63**	**C0646-092-2000-S**	**1.314**	**33.37**	**36.23**	**161.16**	**52.80**	**9.24**
C0646-092-2125-M	**0.646**	**16.41**	**0.092**	**2.34**	**2.125**	**53.98**	**1.309**	**33.25**	**1.223**	**31.07**	**46.36**	**206.23**	**56.81**	**9.94**	**C0646-092-2125-S**	**1.392**	**35.35**	**36.23**	**161.16**	**49.40**	**8.64**
C0646-092-2250-M	**0.646**	**16.41**	**0.092**	**2.34**	**2.250**	**57.15**	**1.381**	**35.09**	**1.289**	**32.75**	**46.36**	**206.23**	**53.37**	**9.34**	**C0646-092-2250-S**	**1.469**	**37.32**	**36.23**	**161.16**	**46.41**	**8.12**
C0646-092-2375-M	**0.646**	**16.41**	**0.092**	**2.34**	**2.375**	**60.33**	**1.454**	**36.93**	**1.356**	**34.44**	**46.36**	**206.23**	**50.33**	**8.81**	**C0646-092-2375-S**	**1.547**	**39.30**	**36.23**	**161.16**	**43.76**	**7.66**
C0646-092-2500-M	**0.646**	**16.41**	**0.092**	**2.34**	**2.500**	**63.50**	**1.526**	**38.77**	**1.422**	**36.12**	**46.36**	**206.23**	**47.61**	**8.33**	**C0646-092-2500-S**	**1.625**	**41.27**	**36.23**	**161.16**	**41.40**	**7.25**
C0646-092-2625-M	**0.646**	**16.41**	**0.092**	**2.34**	**2.625**	**66.68**	**1.599**	**40.61**	**1.488**	**37.81**	**46.36**	**206.23**	**45.17**	**7.91**	**C0646-092-2625-S**	**1.703**	**43.25**	**36.23**	**161.16**	**39.28**	**6.87**
C0646-092-2750-M	**0.646**	**16.41**	**0.092**	**2.34**	**2.750**	**69.85**	**1.671**	**42.45**	**1.555**	**39.49**	**46.36**	**206.23**	**42.97**	**7.52**	**C0646-092-2750-S**	**1.780**	**45.22**	**36.23**	**161.16**	**37.37**	**6.54**
C0646-092-2875-M	**0.646**	**16.41**	**0.092**	**2.34**	**2.875**	**73.03**	**1.744**	**44.29**	**1.621**	**41.17**	**46.36**	**206.23**	**40.98**	**7.17**	**C0646-092-2875-S**	**1.858**	**47.20**	**36.23**	**161.16**	**35.63**	**6.24**
C0646-092-3000-M	**0.646**	**16.41**	**0.092**	**2.34**	**3.000**	**76.20**	**1.816**	**46.13**	**1.687**	**42.86**	**46.36**	**206.23**	**39.16**	**6.85**	**C0646-092-3000-S**	**1.936**	**49.17**	**36.23**	**161.16**	**34.05**	**5.96**
C0646-092-3250-M	**0.646**	**16.41**	**0.092**	**2.34**	**3.250**	**82.55**	**1.961**	**49.81**	**1.820**	**46.23**	**46.36**	**206.23**	**35.96**	**6.29**	**C0646-092-3250-S**	**2.091**	**53.12**	**36.23**	**161.16**	**31.27**	**5.47**
C0646-092-3500-M	**0.646**	**16.41**	**0.092**	**2.34**	**3.500**	**88.90**	**2.106**	**53.49**	**1.953**	**49.60**	**46.36**	**206.23**	**33.25**	**5.82**	**C0646-092-3500-S**	**2.247**	**57.07**	**36.23**	**161.16**	**28.92**	**5.06**
C0646-092-3750-M	**0.646**	**16.41**	**0.092**	**2.34**	**3.750**	**95.25**	**2.251**	**57.17**	**2.085**	**52.97**	**46.36**	**206.23**	**30.92**	**5.41**	**C0646-092-3750-S**	**2.403**	**61.02**	**36.23**	**161.16**	**26.89**	**4.71**
C0646-092-4000-M	**0.646**	**16.41**	**0.092**	**2.34**	**4.000**	**101.60**	**2.395**	**60.85**	**2.218**	**56.34**	**46.36**	**206.23**	**28.90**	**5.06**	**C0646-092-4000-S**	**2.558**	**64.97**	**36.23**	**161.16**	**25.13**	**4.40**
C0646-092-4250-M	**0.646**	**16.41**	**0.092**	**2.34**	**4.250**	**107.95**	**2.540**	**64.53**	**2.351**	**59.71**	**46.36**	**206.23**	**27.12**	**4.75**	**C0646-092-4250-S**	**2.714**	**68.93**	**36.23**	**161.16**	**23.58**	**4.13**
C0646-092-4500-M	**0.646**	**16.41**	**0.092**	**2.34**	**4.500**	**114.30**	**2.685**	**68.21**	**2.483**	**63.07**	**46.36**	**206.23**	**25.55**	**4.47**	**C0646-092-4500-S**	**2.869**	**72.88**	**36.23**	**161.16**	**22.22**	**3.89**
C0646-092-4750-M	**0.646**	**16.41**	**0.092**	**2.34**	**4.750**	**120.65**	**2.830**	**71.89**	**2.616**	**66.44**	**46.36**	**206.23**	**24.15**	**4.23**	**C0646-092-4750-S**	**3.025**	**76.83**	**36.23**	**161.16**	**21.00**	**3.67**
C0646-092-5000-M	**0.646**	**16.41**	**0.092**	**2.34**	**5.000**	**127.00**	**2.975**	**75.57**	**2.749**	**69.81**	**46.36**	**206.23**	**22.90**	**4.01**	**C0646-092-5000-S**	**3.180**	**80.78**	**36.23**	**161.16**	**19.91**	**3.48**
C0646-092-5250-M	**0.646**	**16.41**	**0.092**	**2.34**	**5.250**	**133.35**	**3.120**	**79.25**	**2.881**	**73.18**	**46.36**	**206.23**	**21.77**	**3.81**	**C0646-092-5250-S**	**3.336**	**84.73**	**36.23**	**161.16**	**18.93**	**3.31**

Part Numbers with an "*" are squared and not ground. **Part Numbers in bold** represent the newly expanded Associated Spring RAYMOND compression spring offering.

MUSIC WIRE															STAINLESS STEEL						
Catalog #	Outside Diameter (OD)		Wire Diameter (d)		Free Length (L) Approx		Load Length (L_1)		Solid Height (Sh) Approx		Load (P) at L_1		Spring Rate (R)		Catalog #	Load Length (L_1)		Load (P) at L_1		Spring Rate (R)	
	in	mm	in	mm	in	mm	in	mm	in	mm	lb	N	lb/in	N/mm		in	mm	lb	N	lb/in	N/mm
C0646-092-5500-M	**0.646**	**16.41**	**0.092**	**2.34**	**5.500**	**139.70**	**3.265**	**82.93**	**3.014**	**76.55**	**46.36**	**206.23**	**20.74**	**3.63**	**C0646-092-5500-S**	**3.491**	**88.68**	**36.23**	**161.16**	**18.04**	**3.16**
C0646-092-5750-M	**0.646**	**16.41**	**0.092**	**2.34**	**5.750**	**146.05**	**3.410**	**86.61**	**3.147**	**79.92**	**46.36**	**206.23**	**19.81**	**3.47**	**C0646-092-5750-S**	**3.647**	**92.63**	**36.23**	**161.16**	**17.23**	**3.01**
C0646-092-6000-M	**0.646**	**16.41**	**0.092**	**2.34**	**6.000**	**152.40**	**3.555**	**90.29**	**3.279**	**83.29**	**46.36**	**206.23**	**18.96**	**3.32**	**C0646-092-6000-S**	**3.802**	**96.58**	**36.23**	**161.16**	**16.49**	**2.89**
C0646-092-6250-M	**0.646**	**16.41**	**0.092**	**2.34**	**6.250**	**158.75**	**3.699**	**93.97**	**3.412**	**86.66**	**46.36**	**206.23**	**18.18**	**3.18**	**C0646-092-6250-S**	**3.958**	**100.53**	**36.23**	**161.16**	**15.81**	**2.77**
C0646-092-6500-M	**0.646**	**16.41**	**0.092**	**2.34**	**6.500**	**165.10**	**3.844**	**97.65**	**3.544**	**90.03**	**46.36**	**206.23**	**17.46**	**3.06**	**C0646-092-6500-S**	**4.113**	**104.48**	**36.23**	**161.16**	**15.18**	**2.66**
C0646-092-6750-M	**0.646**	**16.41**	**0.092**	**2.34**	**6.750**	**171.45**	**3.989**	**101.33**	**3.677**	**93.40**	**46.36**	**206.23**	**16.79**	**2.94**	**C0646-092-6750-S**	**4.269**	**108.43**	**36.23**	**161.16**	**14.60**	**2.56**
C0646-092-7000-M	**0.646**	**16.41**	**0.092**	**2.34**	**7.000**	**177.80**	**4.134**	**105.01**	**3.810**	**96.77**	**46.36**	**206.23**	**16.18**	**2.83**	**C0646-092-7000-S**	**4.424**	**112.38**	**36.23**	**161.16**	**14.07**	**2.46**
C0646-092-7500-M	**0.646**	**16.41**	**0.092**	**2.34**	**7.500**	**190.50**	**4.424**	**112.37**	**4.075**	**103.51**	**46.36**	**206.23**	**15.07**	**2.64**	**C0646-092-7500-S**	**4.736**	**120.28**	**36.23**	**161.16**	**13.11**	**2.29**
C0646-092-8000-M	**0.646**	**16.41**	**0.092**	**2.34**	**8.000**	**203.20**	**4.714**	**119.73**	**4.340**	**110.24**	**46.36**	**206.23**	**14.11**	**2.47**	**C0646-092-8000-S**	**5.047**	**128.18**	**36.23**	**161.16**	**12.27**	**2.15**
C0646-092-8500-M	**0.646**	**16.41**	**0.092**	**2.34**	**8.500**	**215.90**	**5.003**	**127.09**	**4.606**	**116.98**	**46.36**	**206.23**	**13.26**	**2.32**	**C0646-092-8500-S**	**5.358**	**136.08**	**36.23**	**161.16**	**11.53**	**2.02**
C0646-092-9000-M	**0.646**	**16.41**	**0.092**	**2.34**	**9.000**	**228.60**	**5.293**	**134.45**	**4.871**	**123.72**	**46.36**	**206.23**	**12.51**	**2.19**	**C0646-092-9000-S**	**5.669**	**143.99**	**36.23**	**161.16**	**10.88**	**1.90**
C0646-092-9500-M	**0.646**	**16.41**	**0.092**	**2.34**	**9.500**	**241.30**	**5.583**	**141.81**	**5.136**	**130.46**	**46.36**	**206.23**	**11.84**	**2.07**	**C0646-092-9500-S**	**5.980**	**151.89**	**36.23**	**161.16**	**10.29**	**1.80**
C0646-098-0938-M	**0.646**	**16.41**	**0.098**	**2.49**	**0.938**	**23.81**	**0.653**	**16.60**	**0.633**	**16.09**	**55.07**	**244.97**	**193.86**	**33.93**	**C0646-098-0938-S**	**0.683**	**17.35**	**42.87**	**190.69**	**168.58**	**29.50**
C0646-098-1000-M	**0.646**	**16.41**	**0.098**	**2.49**	**1.000**	**25.40**	**0.692**	**17.58**	**0.669**	**17.01**	**55.07**	**244.97**	**178.79**	**31.29**	**C0646-098-1000-S**	**0.724**	**18.40**	**42.87**	**190.69**	**155.47**	**27.21**
C0646-098-1125-M	**0.646**	**16.41**	**0.098**	**2.49**	**1.125**	**28.58**	**0.769**	**19.53**	**0.742**	**18.84**	**55.07**	**244.97**	**154.74**	**27.08**	**C0646-098-1125-S**	**0.806**	**20.48**	**42.87**	**190.69**	**134.55**	**23.55**
C0646-098-1250-M	**0.646**	**16.41**	**0.098**	**2.49**	**1.250**	**31.75**	**0.846**	**21.49**	**0.814**	**20.67**	**55.07**	**244.97**	**136.38**	**23.87**	**C0646-098-1250-S**	**0.889**	**22.57**	**42.87**	**190.69**	**118.60**	**20.75**
C0646-098-1375-M	**0.646**	**16.41**	**0.098**	**2.49**	**1.375**	**34.93**	**0.923**	**23.45**	**0.886**	**22.50**	**55.07**	**244.97**	**121.93**	**21.34**	**C0646-098-1375-S**	**0.971**	**24.65**	**42.87**	**190.69**	**106.02**	**18.55**
C0646-098-1500-M	**0.646**	**16.41**	**0.098**	**2.49**	**1.500**	**38.10**	**1.000**	**25.41**	**0.958**	**24.33**	**55.07**	**244.97**	**110.24**	**19.29**	**C0646-098-1500-S**	**1.053**	**26.74**	**42.87**	**190.69**	**95.86**	**16.78**
C0646-098-1625-M	**0.646**	**16.41**	**0.098**	**2.49**	**1.625**	**41.28**	**1.078**	**27.37**	**1.030**	**26.16**	**55.07**	**244.97**	**100.59**	**17.60**	**C0646-098-1625-S**	**1.135**	**28.83**	**42.87**	**190.69**	**87.47**	**15.31**
C0646-098-1750-M	**0.646**	**16.41**	**0.098**	**2.49**	**1.750**	**44.45**	**1.155**	**29.33**	**1.102**	**27.99**	**55.07**	**244.97**	**92.50**	**16.19**	**C0646-098-1750-S**	**1.217**	**30.91**	**42.87**	**190.69**	**80.44**	**14.08**
C0646-098-1875-M	**0.646**	**16.41**	**0.098**	**2.49**	**1.875**	**47.63**	**1.232**	**31.29**	**1.174**	**29.82**	**55.07**	**244.97**	**85.62**	**14.98**	**C0646-098-1875-S**	**1.299**	**33.00**	**42.87**	**190.69**	**74.45**	**13.03**
C0646-098-2000-M	**0.646**	**16.41**	**0.098**	**2.49**	**2.000**	**50.80**	**1.309**	**33.25**	**1.246**	**31.65**	**55.07**	**244.97**	**79.68**	**13.94**	**C0646-098-2000-S**	**1.381**	**35.09**	**42.87**	**190.69**	**69.29**	**12.13**
C0646-098-2125-M	**0.646**	**16.41**	**0.098**	**2.49**	**2.125**	**53.98**	**1.386**	**35.20**	**1.318**	**33.49**	**55.07**	**244.97**	**74.52**	**13.04**	**C0646-098-2125-S**	**1.463**	**37.17**	**42.87**	**190.69**	**64.80**	**11.34**
C0646-098-2250-M	**0.646**	**16.41**	**0.098**	**2.49**	**2.250**	**57.15**	**1.463**	**37.16**	**1.390**	**35.32**	**55.07**	**244.97**	**69.99**	**12.25**	**C0646-098-2250-S**	**1.546**	**39.26**	**42.87**	**190.69**	**60.86**	**10.65**
C0646-098-2375-M	**0.646**	**16.41**	**0.098**	**2.49**	**2.375**	**60.33**	**1.540**	**39.12**	**1.463**	**37.15**	**55.07**	**244.97**	**65.97**	**11.54**	**C0646-098-2375-S**	**1.628**	**41.34**	**42.87**	**190.69**	**57.37**	**10.04**
C0646-098-2500-M	**0.646**	**16.41**	**0.098**	**2.49**	**2.500**	**63.50**	**1.617**	**41.08**	**1.535**	**38.98**	**55.07**	**244.97**	**62.39**	**10.92**	**C0646-098-2500-S**	**1.710**	**43.43**	**42.87**	**190.69**	**54.25**	**9.49**
C0646-098-2625-M	**0.646**	**16.41**	**0.098**	**2.49**	**2.625**	**66.68**	**1.694**	**43.04**	**1.607**	**40.81**	**55.07**	**244.97**	**59.18**	**10.36**	**C0646-098-2625-S**	**1.792**	**45.52**	**42.87**	**190.69**	**51.46**	**9.01**
C0646-098-2750-M	**0.646**	**16.41**	**0.098**	**2.49**	**2.750**	**69.85**	**1.772**	**45.00**	**1.679**	**42.64**	**55.07**	**244.97**	**56.28**	**9.85**	**C0646-098-2750-S**	**1.874**	**47.60**	**42.87**	**190.69**	**48.94**	**8.57**
C0646-098-2875-M	**0.646**	**16.41**	**0.098**	**2.49**	**2.875**	**73.03**	**1.849**	**46.96**	**1.751**	**44.47**	**55.07**	**244.97**	**53.66**	**9.39**	**C0646-098-2875-S**	**1.956**	**49.69**	**42.87**	**190.69**	**46.66**	**8.17**
C0646-098-3000-M	**0.646**	**16.41**	**0.098**	**2.49**	**3.000**	**76.20**	**1.926**	**48.91**	**1.823**	**46.30**	**55.07**	**244.97**	**51.27**	**8.97**	**C0646-098-3000-S**	**2.038**	**51.77**	**42.87**	**190.69**	**44.58**	**7.80**
C0646-098-3250-M	**0.646**	**16.41**	**0.098**	**2.49**	**3.250**	**82.55**	**2.080**	**52.83**	**1.967**	**49.97**	**55.07**	**244.97**	**47.07**	**8.24**	**C0646-098-3250-S**	**2.203**	**55.95**	**42.87**	**190.69**	**40.93**	**7.16**
C0646-098-3500-M	**0.646**	**16.41**	**0.098**	**2.49**	**3.500**	**88.90**	**2.234**	**56.75**	**2.111**	**53.63**	**55.07**	**244.97**	**43.51**	**7.61**	**C0646-098-3500-S**	**2.367**	**60.12**	**42.87**	**190.69**	**37.83**	**6.62**
C0646-098-3750-M	**0.646**	**16.41**	**0.098**	**2.49**	**3.750**	**95.25**	**2.388**	**60.67**	**2.256**	**57.29**	**55.07**	**244.97**	**40.45**	**7.08**	**C0646-098-3750-S**	**2.531**	**64.29**	**42.87**	**190.69**	**35.17**	**6.15**
C0646-098-4000-M	**0.646**	**16.41**	**0.098**	**2.49**	**4.000**	**101.60**	**2.543**	**64.58**	**2.400**	**60.95**	**55.07**	**244.97**	**37.79**	**6.61**	**C0646-098-4000-S**	**2.695**	**68.46**	**42.87**	**190.69**	**32.86**	**5.75**
C0646-098-4250-M	**0.646**	**16.41**	**0.098**	**2.49**	**4.250**	**107.95**	**2.697**	**68.50**	**2.544**	**64.62**	**55.07**	**244.97**	**35.46**	**6.21**	**C0646-098-4250-S**	**2.860**	**72.64**	**42.87**	**190.69**	**30.83**	**5.40**
C0646-098-4500-M	**0.646**	**16.41**	**0.098**	**2.49**	**4.500**	**114.30**	**2.851**	**72.42**	**2.688**	**68.28**	**55.07**	**244.97**	**33.40**	**5.84**	**C0646-098-4500-S**	**3.024**	**76.81**	**42.87**	**190.69**	**29.04**	**5.08**
C0646-098-4750-M	**0.646**	**16.41**	**0.098**	**2.49**	**4.750**	**120.65**	**3.005**	**76.33**	**2.832**	**71.94**	**55.07**	**244.97**	**31.57**	**5.52**	**C0646-098-4750-S**	**3.188**	**80.98**	**42.87**	**190.69**	**27.45**	**4.80**
C0646-098-5000-M	**0.646**	**16.41**	**0.098**	**2.49**	**5.000**	**127.00**	**3.160**	**80.25**	**2.976**	**75.60**	**55.07**	**244.97**	**29.92**	**5.24**	**C0646-098-5000-S**	**3.352**	**85.15**	**42.87**	**190.69**	**26.02**	**4.55**
C0646-098-5250-M	**0.646**	**16.41**	**0.098**	**2.49**	**5.250**	**133.35**	**3.314**	**84.17**	**3.121**	**79.26**	**55.07**	**244.97**	**28.44**	**4.98**	**C0646-098-5250-S**	**3.517**	**89.32**	**42.87**	**190.69**	**24.73**	**4.33**
C0646-098-5500-M	**0.646**	**16.41**	**0.098**	**2.49**	**5.500**	**139.70**	**3.468**	**88.09**	**3.265**	**82.93**	**55.07**	**244.97**	**27.10**	**4.74**	**C0646-098-5500-S**	**3.681**	**93.50**	**42.87**	**190.69**	**23.57**	**4.12**
C0646-098-5750-M	**0.646**	**16.41**	**0.098**	**2.49**	**5.750**	**146.05**	**3.622**	**92.00**	**3.409**	**86.59**	**55.07**	**244.97**	**25.88**	**4.53**	**C0646-098-5750-S**	**3.845**	**97.67**	**42.87**	**190.69**	**22.51**	**3.94**
C0646-098-6000-M	**0.646**	**16.41**	**0.098**	**2.49**	**6.000**	**152.40**	**3.776**	**95.92**	**3.553**	**90.25**	**55.07**	**244.97**	**24.77**	**4.33**	**C0646-098-6000-S**	**4.009**	**101.84**	**42.87**	**190.69**	**21.54**	**3.77**
C0646-098-6250-M	**0.646**	**16.41**	**0.098**	**2.49**	**6.250**	**158.75**	**3.931**	**99.84**	**3.697**	**93.91**	**55.07**	**244.97**	**23.75**	**4.16**	**C0646-098-6250-S**	**4.174**	**106.01**	**42.87**	**190.69**	**20.65**	**3.61**
C0646-098-6500-M	**0.646**	**16.41**	**0.098**	**2.49**	**6.500**	**165.10**	**4.085**	**103.76**	**3.842**	**97.58**	**55.07**	**244.97**	**22.80**	**3.99**	**C0646-098-6500-S**	**4.338**	**110.19**	**42.87**	**190.69**	**19.83**	**3.47**
C0646-098-6750-M	**0.646**	**16.41**	**0.098**	**2.49**	**6.750**	**171.45**	**4.239**	**107.67**	**3.986**	**101.24**	**55.07**	**244.97**	**21.93**	**3.84**	**C0646-098-6750-S**	**4.502**	**114.36**	**42.87**	**190.69**	**19.07**	**3.34**
C0646-098-7000-M	**0.646**	**16.41**	**0.098**	**2.49**	**7.000**	**177.80**	**4.393**	**111.59**	**4.130**	**104.90**	**55.07**	**244.97**	**21.13**	**3.70**	**C0646-098-7000-S**	**4.667**	**118.53**	**42.87**	**190.69**	**18.37**	**3.21**
C0646-098-7500-M	**0.646**	**16.41**	**0.098**	**2.49**	**7.500**	**190.50**	**4.702**	**119.42**	**4.418**	**112.23**	**55.07**	**244.97**	**19.68**	**3.44**	**C0646-098-7500-S**	**4.995**	**126.87**	**42.87**	**190.69**	**17.11**	**2.99**
C0646-098-8000-M	**0.646**	**16.41**	**0.098**	**2.49**	**8.000**	**203.20**	**5.010**	**127.26**	**4.707**	**119.55**	**55.07**	**244.97**	**18.42**	**3.22**	**C0646-098-8000-S**	**5.324**	**135.22**	**42.87**	**190.69**	**16.02**	**2.80**
C0646-098-8500-M	**0.646**	**16.41**	**0.098**	**2.49**	**8.500**	**215.90**	**5.319**	**135.09**	**4.995**	**126.87**	**55.07**	**244.97**	**17.31**	**3.03**	**C0646-098-8500-S**	**5.652**	**143.56**	**42.87**	**190.69**	**15.05**	**2.63**
C0646-098-9000-M	**0.646**	**16.41**	**0.098**	**2.49**	**9.000**	**228.60**	**5.627**	**142.93**	**5.283**	**134.20**	**55.07**	**244.97**	**16.33**	**2.86**	**C0646-098-9000-S**	**5.981**	**151.91**	**42.87**	**190.69**	**14.20**	**2.48**
C0646-098-9500-M	**0.646**	**16.41**	**0.098**	**2.49**	**9.500**	**241.30**	**5.935**	**150.76**	**5.572**	**141.52**	**55.07**	**244.97**	**15.45**	**2.70**	**C0646-098-9500-S**	**6.309**	**160.25**	**42.87**	**190.69**	**13.44**	**2.35**
C0646-105-0938-M	**0.646**	**16.41**	**0.105**	**2.67**	**0.938**	**23.81**	**0.688**	**17.49**	**0.677**	**17.19**	**66.40**	**295.37**	**266.65**	**46.66**	**C0646-105-0938-S**	**0.716**	**18.18**	**51.44**	**228.83**	**231.87**	**40.58**
C0646-105-1000-M	**0.646**	**16.41**	**0.105**	**2.67**	**1.000**	**25.40**	**0.730**	**18.53**	**0.716**	**18.19**	**66.40**	**295.37**	**245.56**	**42.97**	**C0646-105-1000-S**	**0.759**	**19.28**	**51.44**	**228.83**	**213.53**	**37.37**
C0646-105-1125-M	**0.646**	**16.41**	**0.105**	**2.67**	**1.125**	**28.58**	**0.812**	**20.62**	**0.794**	**20.18**	**66.40**	**295.37**	**212.01**	**37.10**	**C0646-105-1125-S**	**0.846**	**21.49**	**51.44**	**228.83**	**184.36**	**32.26**
C0646-105-1250-M	**0.646**	**16.41**	**0.105**	**2.67**	**1.250**	**31.75**	**0.894**	**22.71**	**0.873**	**22.17**	**66.40**	**295.37**	**186.53**	**32.64**	**C0646-105-1250-S**	**0.933**	**23.69**	**51.44**	**228.83**	**162.20**	**28.38**
C0646-105-1375-M	**0.646**	**16.41**	**0.105**	**2.67**	**1.375**	**34.93**	**0.976**	**24.80**	**0.951**	**24.16**	**66.40**	**295.37**	**166.51**	**29.14**	**C0646-105-1375-S**	**1.020**	**25.90**	**51.44**	**228.83**	**144.80**	**25.34**
C0646-105-1500-M	**0.646**	**16.41**	**0.105**	**2.67**	**1.500**	**38.10**	**1.058**	**26.88**	**1.030**	**26.15**	**66.40**	**295.37**	**150.38**	**26.32**	**C0646-105-1500-S**	**1.107**	**28.11**	**51.44**	**228.83**	**130.76**	**22.88**
C0646-105-1625-M	**0.646**	**16.41**	**0.105**	**2.67**	**1.625**	**41.28**	**1.141**	**28.97**	**1.108**	**28.14**	**66.40**	**295.37**	**137.10**	**23.99**	**C0646-105-1625-S**	**1.193**	**30.31**	**51.44**	**228.83**	**119.21**	**20.86**
C0646-105-1750-M	**0.646**	**16.41**	**0.105**	**2.67**	**1.750**	**44.45**	**1.223**	**31.06**	**1.186**	**30.13**	**66.40**	**295.37**	**125.97**	**22.04**	**C0646-105-1750-S**	**1.280**	**32.52**	**51.44**	**228.83**	**109.54**	**19.17**
C0646-105-1875-M	**0.646**	**16.41**	**0.105**	**2.67**	**1.875**	**47.63**	**1.305**	**33.15**	**1.265**	**32.12**	**66.40**	**295.37**	**116.51**	**20.39**	**C0646-105-1875-S**	**1.367**	**34.73**	**51.44**	**228.83**	**101.31**	**17.73**
C0646-105-2000-M	**0.646**	**16.41**	**0.105**	**2.67**	**2.000**	**50.80**	**1.387**	**35.24**	**1.343**	**34.11**	**66.40**	**295.37**	**108.37**	**18.97**	**C0646-105-2000-S**	**1.454**	**36.93**	**51.44**	**228.83**	**94.24**	**16.49**
C0646-105-2125-M	**0.646**	**16.41**	**0.105**	**2.67**	**2.125**	**53.98**	**1.469**	**37.33**	**1.422**	**36.11**	**66.40**	**295.37**	**101.30**	**17.73**	**C0646-105-2125-S**	**1.541**	**39.14**	**51.44**	**228.83**	**88.09**	**15.42**
C0646-105-2250-M	**0.646**	**16.41**	**0.105**	**2.67**	**2.250**	**57.15**	**1.552**	**39.41**	**1.500**	**38.10**	**66.40**	**295.37**	**95.09**	**16.64**	**C0646-105-2250-S**	**1.628**	**41.35**	**51.44**	**228.83**	**82.69**	**14.47**
C0646-105-2375-M	**0.646**	**16.41**	**0.105**	**2.67**	**2.375**	**60.33**	**1.634**	**41.50**	**1.578**	**40.09**	**66.40**	**295.37**	**89.60**	**15.68**	**C0646-105-2375-S**	**1.715**	**43.55**	**51.44**	**228.83**	**77.92**	**13.64**

FOR INFORMATION ON ALTERNATIVE FINISHES, SEE PAGE 311

Part Numbers with an "*" are squared and not ground. **Part Numbers in bold** represent the newly expanded Associated Spring RAYMOND compression spring offering.

MUSIC WIRE															STAINLESS STEEL						
Catalog #	Outside Diameter (OD)		Wire Diameter (d)		Free Length (L) Approx		Load Length (L_1)		Solid Height (Sh) Approx		Load (P) at L_1		Spring Rate (R)		Catalog #	Load Length (L_1)		Load (P) at L_1		Spring Rate (R)	
	in	mm	in	mm	in	mm	in	mm	in	mm	lb	N	lb/in	N/mm		in	mm	lb	N	lb/in	N/mm
C0646-105-2500-M	0.646	16.41	0.105	2.67	2.500	63.50	1.716	43.59	1.657	42.08	66.40	295.37	84.71	14.82	**C0646-105-2500-S**	1.802	45.76	51.44	228.83	73.66	12.89
C0646-105-2625-M	0.646	16.41	0.105	2.67	2.625	66.68	1.798	45.68	1.735	44.07	66.40	295.37	80.33	14.06	**C0646-105-2625-S**	1.889	47.97	51.44	228.83	69.85	12.22
C0646-105-2750-M	0.646	16.41	0.105	2.67	2.750	69.85	1.881	47.77	1.813	46.06	66.40	295.37	76.37	13.37	**C0646-105-2750-S**	1.975	50.17	51.44	228.83	66.41	11.62
C0646-105-2875-M	0.646	16.41	0.105	2.67	2.875	73.03	1.963	49.85	1.892	48.05	66.40	295.37	72.79	12.74	**C0646-105-2875-S**	2.062	52.38	51.44	228.83	63.30	11.08
C0646-105-3000-M	0.646	16.41	0.105	2.67	3.000	76.20	2.045	51.94	1.970	50.04	66.40	295.37	69.53	12.17	**C0646-105-3000-S**	2.149	54.59	51.44	228.83	60.46	10.58
C0646-105-3250-M	0.646	16.41	0.105	2.67	3.250	82.55	2.209	56.12	2.127	54.03	66.40	295.37	63.81	11.17	**C0646-105-3250-S**	2.323	59.00	51.44	228.83	55.49	9.71
C0646-105-3500-M	0.646	16.41	0.105	2.67	3.500	88.90	2.374	60.30	2.284	58.01	66.40	295.37	58.96	10.32	**C0646-105-3500-S**	2.497	63.42	51.44	228.83	51.27	8.97
C0646-105-3750-M	0.646	16.41	0.105	2.67	3.750	95.25	2.538	64.47	2.441	61.99	66.40	295.37	54.80	9.59	**C0646-105-3750-S**	2.670	67.83	51.44	228.83	47.65	8.34
C0646-105-4000-M	0.646	16.41	0.105	2.67	4.000	101.60	2.703	68.65	2.597	65.97	66.40	295.37	51.18	8.96	**C0646-105-4000-S**	2.844	72.24	51.44	228.83	44.51	7.79
C0646-105-4250-M	0.646	16.41	0.105	2.67	4.250	107.95	2.867	72.82	2.754	69.96	66.40	295.37	48.02	8.40	**C0646-105-4250-S**	3.018	76.66	51.44	228.83	41.75	7.31
C0646-105-4500-M	0.646	16.41	0.105	2.67	4.500	114.30	3.032	77.00	2.911	73.94	66.40	295.37	45.22	7.91	**C0646-105-4500-S**	3.192	81.07	51.44	228.83	39.32	6.88
C0646-105-4750-M	0.646	16.41	0.105	2.67	4.750	120.65	3.196	81.18	3.068	77.92	66.40	295.37	42.73	7.48	**C0646-105-4750-S**	3.365	85.48	51.44	228.83	37.16	6.50
C0646-105-5000-M	0.646	16.41	0.105	2.67	5.000	127.00	3.360	85.35	3.225	81.90	66.40	295.37	40.50	7.09	**C0646-105-5000-S**	3.539	89.90	51.44	228.83	35.22	6.16
C0646-105-5250-M	0.646	16.41	0.105	2.67	5.250	133.35	3.525	89.53	3.381	85.89	66.40	295.37	38.49	6.74	**C0646-105-5250-S**	3.713	94.31	51.44	228.83	33.47	5.86
C0646-105-5500-M	0.646	16.41	0.105	2.67	5.500	139.70	3.689	93.71	3.538	89.87	66.40	295.37	36.67	6.42	**C0646-105-5500-S**	3.887	98.72	51.44	228.83	31.89	5.58
C0646-105-5750-M	0.646	16.41	0.105	2.67	5.750	146.05	3.854	97.88	3.695	93.85	66.40	295.37	35.02	6.13	**C0646-105-5750-S**	4.060	103.14	51.44	228.83	30.45	5.33
C0646-105-6000-M	0.646	16.41	0.105	2.67	6.000	152.40	4.018	102.06	3.852	97.83	66.40	295.37	33.50	5.86	**C0646-105-6000-S**	4.234	107.55	51.44	228.83	29.13	5.10
C0646-105-6250-M	0.646	16.41	0.105	2.67	6.250	158.75	4.182	106.24	4.009	101.82	66.40	295.37	32.12	5.62	**C0646-105-6250-S**	4.408	111.96	51.44	228.83	27.93	4.89
C0646-105-6500-M	0.646	16.41	0.105	2.67	6.500	165.10	4.347	110.41	4.165	105.80	66.40	295.37	30.84	5.40	**C0646-105-6500-S**	4.582	116.38	51.44	228.83	26.82	4.69
C0646-105-6750-M	0.646	16.41	0.105	2.67	6.750	171.45	4.511	114.59	4.322	109.78	66.40	295.37	29.66	5.19	**C0646-105-6750-S**	4.756	120.79	51.44	228.83	25.79	4.51
C0646-105-7000-M	0.646	16.41	0.105	2.67	7.000	177.80	4.676	118.76	4.479	113.76	66.40	295.37	28.57	5.00	**C0646-105-7000-S**	4.929	125.20	51.44	228.83	24.84	4.35
C0646-105-7500-M	0.646	16.41	0.105	2.67	7.500	190.50	5.005	127.12	4.792	121.73	66.40	295.37	26.61	4.66	**C0646-105-7500-S**	5.277	134.03	51.44	228.83	23.14	4.05
C0646-105-8000-M	0.646	16.41	0.105	2.67	8.000	203.20	5.333	135.47	5.106	129.69	66.40	295.37	24.90	4.36	**C0646-105-8000-S**	5.624	142.86	51.44	228.83	21.65	3.79
C0646-105-8500-M	0.646	16.41	0.105	2.67	8.500	215.90	5.662	143.82	5.420	137.66	66.40	295.37	23.40	4.10	**C0646-105-8500-S**	5.972	151.68	51.44	228.83	20.35	3.56
C0646-105-9000-M	0.646	16.41	0.105	2.67	9.000	228.60	5.991	152.18	5.733	145.62	66.40	295.37	22.07	3.86	**C0646-105-9000-S**	6.319	160.51	51.44	228.83	19.19	3.36
C0646-105-9500-M	0.646	16.41	0.105	2.67	9.500	241.30	6.320	160.53	6.047	153.59	66.40	295.37	20.88	3.65	**C0646-105-9500-S**	6.667	169.34	51.44	228.83	18.16	3.18
C0646-112-0938-M	0.646	16.41	0.112	2.85	0.938	23.81	0.720	18.29	0.716	18.18	79.03	351.52	363.48	63.61	**C0646-112-0938-S**	0.745	18.92	60.92	270.99	316.07	55.31
C0646-112-1000-M	0.646	16.41	0.112	2.85	1.000	25.40	0.764	19.39	0.758	19.25	79.03	351.52	334.20	58.49	**C0646-112-1000-S**	0.790	20.08	60.92	270.99	290.61	50.86
C0646-112-1125-M	0.646	16.41	0.112	2.85	1.125	28.58	0.850	21.60	0.842	21.39	79.03	351.52	287.84	50.37	**C0646-112-1125-S**	0.882	22.39	60.92	270.99	250.29	43.80
C0646-112-1250-M	0.646	16.41	0.112	2.85	1.250	31.75	0.937	23.81	0.926	23.53	79.03	351.52	252.77	44.23	**C0646-112-1250-S**	0.973	24.71	60.92	270.99	219.80	38.46
C0646-112-1375-M	0.646	16.41	0.112	2.85	1.375	34.93	1.024	26.02	1.010	25.67	79.03	351.52	225.32	39.43	**C0646-112-1375-S**	1.064	27.03	60.92	270.99	195.93	34.29
C0646-112-1500-M	0.646	16.41	0.112	2.85	1.500	38.10	1.111	28.22	1.095	27.81	79.03	351.52	203.25	35.57	**C0646-112-1500-S**	1.155	29.34	60.92	270.99	176.74	30.93
C0646-112-1625-M	0.646	16.41	0.112	2.85	1.625	41.28	1.198	30.43	1.179	29.94	79.03	351.52	185.11	32.39	**C0646-112-1625-S**	1.247	31.66	60.92	270.99	160.97	28.17
C0646-112-1750-M	0.646	16.41	0.112	2.85	1.750	44.45	1.285	32.64	1.263	32.08	79.03	351.52	169.95	29.74	**C0646-112-1750-S**	1.338	33.98	60.92	270.99	147.78	25.86
C0646-112-1875-M	0.646	16.41	0.112	2.85	1.875	47.63	1.372	34.85	1.347	34.22	79.03	351.52	157.08	27.49	**C0646-112-1875-S**	1.429	36.30	60.92	270.99	136.59	23.90
C0646-112-2000-M	0.646	16.41	0.112	2.85	2.000	50.80	1.459	37.05	1.431	36.36	79.03	351.52	146.03	25.55	**C0646-112-2000-S**	1.520	38.61	60.92	270.99	126.98	22.22
C0646-112-2125-M	0.646	16.41	0.112	2.85	2.125	53.98	1.546	39.26	1.516	38.50	79.03	351.52	136.42	23.87	**C0646-112-2125-S**	1.611	40.93	60.92	270.99	118.63	20.76
C0646-112-2250-M	0.646	16.41	0.112	2.85	2.250	57.15	1.633	41.47	1.600	40.64	79.03	351.52	128.01	22.40	**C0646-112-2250-S**	1.703	43.25	60.92	270.99	111.31	19.48
C0646-112-2375-M	0.646	16.41	0.112	2.85	2.375	60.33	1.720	43.68	1.684	42.78	79.03	351.52	120.57	21.10	**C0646-112-2375-S**	1.794	45.57	60.92	270.99	104.84	18.35
C0646-112-2500-M	0.646	16.41	0.112	2.85	2.500	63.50	1.806	45.88	1.768	44.91	79.03	351.52	113.95	19.94	**C0646-112-2500-S**	1.885	47.88	60.92	270.99	99.08	17.34
C0646-112-2625-M	0.646	16.41	0.112	2.85	2.625	66.68	1.893	48.09	1.852	47.05	79.03	351.52	108.01	18.90	**C0646-112-2625-S**	1.976	50.20	60.92	270.99	93.93	16.44
C0646-112-2750-M	0.646	16.41	0.112	2.85	2.750	69.85	1.980	50.30	1.937	49.19	79.03	351.52	102.67	17.97	**C0646-112-2750-S**	2.068	52.52	60.92	270.99	89.28	15.62
C0646-112-2875-M	0.646	16.41	0.112	2.85	2.875	73.03	2.067	52.51	2.021	51.33	79.03	351.52	97.83	17.12	**C0646-112-2875-S**	2.159	54.83	60.92	270.99	85.07	14.89
C0646-112-3000-M	0.646	16.41	0.112	2.85	3.000	76.20	2.154	54.71	2.105	53.47	79.03	351.52	93.42	16.35	**C0646-112-3000-S**	2.250	57.15	60.92	270.99	81.24	14.22
C0646-112-3250-M	0.646	16.41	0.112	2.85	3.250	82.55	2.328	59.13	2.273	57.75	79.03	351.52	85.70	15.00	**C0646-112-3250-S**	2.433	61.79	60.92	270.99	74.53	13.04
C0646-112-3500-M	0.646	16.41	0.112	2.85	3.500	88.90	2.502	63.54	2.442	62.02	79.03	351.52	79.16	13.85	**C0646-112-3500-S**	2.615	66.42	60.92	270.99	68.84	12.05
C0646-112-3750-M	0.646	16.41	0.112	2.85	3.750	95.25	2.676	67.96	2.610	66.30	79.03	351.52	73.55	12.87	**C0646-112-3750-S**	2.797	71.06	60.92	270.99	63.96	11.19
C0646-112-4000-M	0.646	16.41	0.112	2.85	4.000	101.60	2.849	72.37	2.779	70.58	79.03	351.52	68.68	12.02	**C0646-112-4000-S**	2.980	75.69	60.92	270.99	59.72	10.45
C0646-112-4250-M	0.646	16.41	0.112	2.85	4.250	107.95	3.023	76.79	2.947	74.86	79.03	351.52	64.42	11.27	**C0646-112-4250-S**	3.162	80.32	60.92	270.99	56.01	9.80
C0646-112-4500-M	0.646	16.41	0.112	2.85	4.500	114.30	3.197	81.20	3.115	79.13	79.03	351.52	60.65	10.61	**C0646-112-4500-S**	3.345	84.96	60.92	270.99	52.74	9.23
C0646-112-4750-M	0.646	16.41	0.112	2.85	4.750	120.65	3.371	85.62	3.284	83.41	79.03	351.52	57.30	10.03	**C0646-112-4750-S**	3.527	89.59	60.92	270.99	49.83	8.72
C0646-112-5000-M	0.646	16.41	0.112	2.85	5.000	127.00	3.545	90.03	3.452	87.69	79.03	351.52	54.30	9.50	**C0646-112-5000-S**	3.710	94.23	60.92	270.99	47.22	8.26
C0646-112-5250-M	0.646	16.41	0.112	2.85	5.250	133.35	3.718	94.45	3.621	91.96	79.03	351.52	51.60	9.03	**C0646-112-5250-S**	3.892	98.86	60.92	270.99	44.87	7.85
C0646-112-5500-M	0.646	16.41	0.112	2.85	5.500	139.70	3.892	98.86	3.789	96.24	79.03	351.52	49.16	8.60	**C0646-112-5500-S**	4.075	103.50	60.92	270.99	42.74	7.48
C0646-112-5750-M	0.646	16.41	0.112	2.85	5.750	146.05	4.066	103.28	3.957	100.52	79.03	351.52	46.93	8.21	**C0646-112-5750-S**	4.257	108.13	60.92	270.99	40.81	7.14
C0646-112-6000-M	0.646	16.41	0.112	2.85	6.000	152.40	4.240	107.69	4.126	104.80	79.03	351.52	44.90	7.86	**C0646-112-6000-S**	4.440	112.77	60.92	270.99	39.04	6.83
C0646-112-6250-M	0.646	16.41	0.112	2.85	6.250	158.75	4.414	112.11	4.294	109.07	79.03	351.52	43.04	7.53	**C0646-112-6250-S**	4.622	117.40	60.92	270.99	37.42	6.55
C0646-112-6500-M	0.646	16.41	0.112	2.85	6.500	165.10	4.588	116.52	4.463	113.35	79.03	351.52	41.32	7.23	**C0646-112-6500-S**	4.805	122.04	60.92	270.99	35.93	6.29
C0646-112-6750-M	0.646	16.41	0.112	2.85	6.750	171.45	4.761	120.94	4.631	117.63	79.03	351.52	39.74	6.95	**C0646-112-6750-S**	4.987	126.67	60.92	270.99	34.56	6.05
C0646-112-7000-M	0.646	16.41	0.112	2.85	7.000	177.80	4.935	125.36	4.799	121.91	79.03	351.52	38.27	6.70	**C0646-112-7000-S**	5.169	131.31	60.92	270.99	33.28	5.82
C0646-112-7500-M	0.646	16.41	0.112	2.85	7.500	190.50	5.283	134.19	5.136	130.46	79.03	351.52	35.64	6.24	**C0646-112-7500-S**	5.534	140.57	60.92	270.99	30.99	5.42
C0646-112-8000-M	0.646	16.41	0.112	2.85	8.000	203.20	5.631	143.02	5.473	139.01	79.03	351.52	33.35	5.84	**C0646-112-8000-S**	5.899	149.84	60.92	270.99	29.00	5.08
C0646-112-8500-M	0.646	16.41	0.112	2.85	8.500	215.90	5.978	151.85	5.810	147.57	79.03	351.52	31.34	5.48	**C0646-112-8500-S**	6.264	159.11	60.92	270.99	27.25	4.77
C0646-112-9000-M	0.646	16.41	0.112	2.85	9.000	228.60	6.326	160.68	6.147	156.12	79.03	351.52	29.55	5.17	**C0646-112-9000-S**	6.629	168.38	60.92	270.99	25.70	4.50

Part Numbers with an "*" are squared and not ground. **Part Numbers in bold** represent the newly expanded Associated Spring RAYMOND compression spring offering.

MUSIC WIRE															STAINLESS STEEL						
Catalog #	Outside Diameter (OD)		Wire Diameter (d)		Free Length (L) Approx		Load Length (L_1)		Solid Height (Sh) Approx		Load (P) at L_1		Spring Rate (R)		Catalog #	Load Length (L_1)		Load (P) at L_1		Spring Rate (R)	
	in	mm	in	mm	in	mm	in	mm	in	mm	lb	N	lb/in	N/mm		in	mm	lb	N	lb/in	N/mm
C0646-112-9500-M	0.646	16.41	0.112	2.85	9.500	241.30	6.673	169.51	6.483	164.68	79.03	351.52	27.96	4.89	**C0646-112-9500-S**	6.994	177.65	60.92	270.99	24.31	4.25
C0646-125-1000-M	0.646	16.41	0.125	3.18	1.000	25.40	0.851	21.61	0.824	20.94	86.63	385.36	579.84	101.47	**C0646-125-1000-S**	0.839	21.32	80.93	359.99	504.21	88.24
C0646-125-1125-M	0.646	16.41	0.125	3.18	1.125	28.58	0.949	24.10	0.918	23.31	87.51	389.28	497.01	86.98	**C0646-125-1125-S**	0.938	23.82	80.93	359.99	432.18	75.63
C0646-125-1250-M	0.646	16.41	0.125	3.18	1.250	31.75	1.047	26.60	1.011	25.69	88.17	392.21	434.88	76.10	**C0646-125-1250-S**	1.036	26.31	80.93	359.99	378.16	66.18
C0646-125-1375-M	0.646	16.41	0.125	3.18	1.375	34.93	1.146	29.10	1.105	28.07	88.69	394.50	386.56	67.65	**C0646-125-1375-S**	1.134	28.81	80.93	359.99	336.14	58.82
C0646-125-1500-M	0.646	16.41	0.125	3.18	1.500	38.10	1.244	31.60	1.199	30.45	89.10	396.32	347.91	60.88	**C0646-125-1500-S**	1.232	31.31	80.93	359.99	302.53	52.94
C0646-125-1625-M	0.646	16.41	0.125	3.18	1.625	41.28	1.342	34.09	1.292	32.83	89.43	397.82	316.28	55.35	**C0646-125-1625-S**	1.331	33.80	80.93	359.99	275.02	48.13
C0646-125-1750-M	0.646	16.41	0.125	3.18	1.750	44.45	1.441	36.59	1.386	35.20	89.71	399.06	289.92	50.74	**C0646-125-1750-S**	1.429	36.30	80.93	359.99	252.11	44.12
C0646-125-1875-M	0.646	16.41	0.125	3.18	1.875	47.63	1.539	39.09	1.480	37.58	89.95	400.12	267.62	46.83	**C0646-125-1875-S**	1.527	38.79	80.93	359.99	232.71	40.72
C0646-125-2000-M	0.646	16.41	0.125	3.18	2.000	50.80	1.574	39.97	1.573	39.96	105.98	471.41	248.50	43.49	**C0646-125-2000-S**	1.625	41.29	80.93	359.99	216.09	37.82
C0646-125-2125-M	0.646	16.41	0.125	3.18	2.125	53.98	1.668	42.37	1.667	42.34	105.98	471.41	231.94	40.59	**C0646-125-2125-S**	1.724	43.78	80.93	359.99	201.68	35.29
C0646-125-2250-M	0.646	16.41	0.125	3.18	2.250	57.15	1.763	44.77	1.760	44.72	105.98	471.41	217.44	38.05	**C0646-125-2250-S**	1.822	46.28	80.93	359.99	189.08	33.09
C0646-125-2375-M	0.646	16.41	0.125	3.18	2.375	60.33	1.857	47.17	1.854	47.09	105.98	471.41	204.65	35.81	**C0646-125-2375-S**	1.920	48.77	80.93	359.99	177.96	31.14
C0646-125-2500-M	0.646	16.41	0.125	3.18	2.500	63.50	1.952	49.57	1.948	49.47	105.98	471.41	193.28	33.82	**C0646-125-2500-S**	2.018	51.27	80.93	359.99	168.07	29.41
C0646-125-2625-M	0.646	16.41	0.125	3.18	2.625	66.68	2.046	51.97	2.041	51.85	105.98	471.41	183.11	32.04	**C0646-125-2625-S**	2.117	53.77	80.93	359.99	159.22	27.86
C0646-125-2750-M	0.646	16.41	0.125	3.18	2.750	69.85	2.141	54.38	2.135	54.23	105.98	471.41	173.95	30.44	**C0646-125-2750-S**	2.215	56.26	80.93	359.99	151.26	26.47
C0646-125-2875-M	0.646	16.41	0.125	3.18	2.875	73.03	2.235	56.78	2.229	56.60	105.98	471.41	165.67	28.99	**C0646-125-2875-S**	2.313	58.76	80.93	359.99	144.06	25.21
C0646-125-3000-M	0.646	16.41	0.125	3.18	3.000	76.20	2.330	59.18	2.322	58.98	105.98	471.41	158.14	27.67	**C0646-125-3000-S**	2.411	61.25	80.93	359.99	137.51	24.06
C0646-125-3250-M	0.646	16.41	0.125	3.18	3.250	82.55	2.519	63.98	2.509	63.74	105.98	471.41	144.96	25.37	**C0646-125-3250-S**	2.608	66.24	80.93	359.99	126.05	22.06
C0646-125-3500-M	0.646	16.41	0.125	3.18	3.500	88.90	2.708	68.78	2.697	68.49	105.98	471.41	133.81	23.42	**C0646-125-3500-S**	2.804	71.23	80.93	359.99	116.36	20.36
C0646-125-3750-M	0.646	16.41	0.125	3.18	3.750	95.25	2.897	73.59	2.884	73.25	105.98	471.41	124.25	21.74	**C0646-125-3750-S**	3.001	76.22	80.93	359.99	108.05	18.91
C0646-125-4000-M	0.646	16.41	0.125	3.18	4.000	101.60	3.086	78.39	3.071	78.01	105.98	471.41	115.97	20.29	**C0646-125-4000-S**	3.197	81.22	80.93	359.99	100.84	17.65
C0646-125-4250-M	0.646	16.41	0.125	3.18	4.250	107.95	3.275	83.19	3.258	82.76	105.98	471.41	108.72	19.03	**C0646-125-4250-S**	3.394	86.21	80.93	359.99	94.54	16.54
C0646-125-4500-M	0.646	16.41	0.125	3.18	4.500	114.30	3.464	87.99	3.446	87.52	105.98	471.41	102.33	17.91	**C0646-125-4500-S**	3.590	91.20	80.93	359.99	88.98	15.57
C0646-125-4750-M	0.646	16.41	0.125	3.18	4.750	120.65	3.653	92.80	3.633	92.27	105.98	471.41	96.64	16.91	**C0646-125-4750-S**	3.787	96.19	80.93	359.99	84.04	14.71
C0646-125-5000-M	0.646	16.41	0.125	3.18	5.000	127.00	3.842	97.60	3.820	97.03	105.98	471.41	91.55	16.02	**C0646-125-5000-S**	3.983	101.18	80.93	359.99	79.61	13.93
C0646-125-5250-M	0.646	16.41	0.125	3.18	5.250	133.35	4.032	102.40	4.007	101.79	105.98	471.41	86.98	15.22	**C0646-125-5250-S**	4.180	106.17	80.93	359.99	75.63	13.24
C0646-125-5500-M	0.646	16.41	0.125	3.18	5.500	139.70	4.221	107.20	4.195	106.54	105.98	471.41	82.83	14.50	**C0646-125-5500-S**	4.376	111.16	80.93	359.99	72.03	12.61
C0646-125-5750-M	0.646	16.41	0.125	3.18	5.750	146.05	4.410	112.01	4.382	111.30	105.98	471.41	79.07	13.84	**C0646-125-5750-S**	4.573	116.15	80.93	359.99	68.76	12.03
C0646-125-6000-M	0.646	16.41	0.125	3.18	6.000	152.40	4.599	116.81	4.569	116.05	105.98	471.41	75.63	13.24	**C0646-125-6000-S**	4.769	121.14	80.93	359.99	65.77	11.51
C0646-125-6250-M	0.646	16.41	0.125	3.18	6.250	158.75	4.788	121.61	4.756	120.81	105.98	471.41	72.48	12.68	**C0646-125-6250-S**	4.966	126.14	80.93	359.99	63.03	11.03
C0646-125-6500-M	0.646	16.41	0.125	3.18	6.500	165.10	4.977	126.41	4.944	125.57	105.98	471.41	69.58	12.18	**C0646-125-6500-S**	5.162	131.13	80.93	359.99	60.51	10.59
C0646-125-6750-M	0.646	16.41	0.125	3.18	6.750	171.45	5.166	131.22	5.131	130.32	105.98	471.41	66.91	11.71	**C0646-125-6750-S**	5.359	136.12	80.93	359.99	58.18	10.18
C0646-125-7000-M	0.646	16.41	0.125	3.18	7.000	177.80	5.355	136.02	5.318	135.08	105.98	471.41	64.43	11.27	**C0646-125-7000-S**	5.555	141.11	80.93	359.99	56.02	9.80
C0646-125-7500-M	0.646	16.41	0.125	3.18	7.500	190.50	5.733	145.62	5.693	144.59	105.98	471.41	59.98	10.50	**C0646-125-7500-S**	5.948	151.09	80.93	359.99	52.16	9.13
C0646-125-8000-M	0.646	16.41	0.125	3.18	8.000	203.20	6.111	155.23	6.067	154.10	105.98	471.41	56.11	9.82	**C0646-125-8000-S**	6.341	161.07	80.93	359.99	48.80	8.54
C0646-125-8500-M	0.646	16.41	0.125	3.18	8.500	215.90	6.490	164.83	6.441	163.61	105.98	471.41	52.71	9.22	**C0646-125-8500-S**	6.734	171.05	80.93	359.99	45.84	8.02
C0646-125-9000-M	0.646	16.41	0.125	3.18	9.000	228.60	6.868	174.44	6.816	173.13	105.98	471.41	49.70	8.70	**C0646-125-9000-S**	7.127	181.04	80.93	359.99	43.22	7.56
C0646-125-9500-M	0.646	16.41	0.125	3.18	9.500	241.30	7.246	184.04	7.190	182.64	105.98	471.41	47.01	8.23	**C0646-125-9500-S**	7.520	191.02	80.93	359.99	40.88	7.15
C0660-049-0625-M	0.660	16.76	0.049	1.25	0.625	15.88	0.269	6.82	0.169	4.30	8.30	36.94	23.30	4.08	**C0660-049-0625-S**	0.299	7.61	6.32	28.11	19.41	3.40
C0660-049-0750-M	0.660	16.76	0.049	1.25	0.750	19.05	0.294	7.46	0.194	4.93	8.30	36.94	18.20	3.19	**C0660-049-0750-S**	0.333	8.46	6.32	28.11	15.16	2.65
C0660-049-0875-M	0.660	16.76	0.049	1.25	0.875	22.23	0.329	8.35	0.217	5.50	8.30	36.94	15.20	2.66	**C0660-049-0875-S**	0.376	9.55	6.32	28.11	12.66	2.22
C0660-049-1000-M	0.660	16.76	0.049	1.25	1.000	25.40	0.371	9.42	0.237	6.03	8.30	36.94	13.20	2.31	**C0660-049-1000-S**	0.425	10.80	6.32	28.11	11.00	1.92
C0660-049-1250-M	0.660	16.76	0.049	1.25	1.250	31.75	0.444	11.27	0.282	7.15	8.30	36.94	10.30	1.80	**C0660-049-1250-S**	0.513	13.04	6.32	28.11	8.58	1.50
C0660-049-1500-M	0.660	16.76	0.049	1.25	1.500	38.10	0.523	13.29	0.323	8.20	8.30	36.94	8.50	1.49	**C0660-049-1500-S**	0.608	15.43	6.32	28.11	7.08	1.24
C0660-049-1750-M	0.660	16.76	0.049	1.25	1.750	44.45	0.597	15.16	0.363	9.21	8.30	36.94	7.20	1.26	**C0660-049-1750-S**	0.696	17.69	6.32	28.11	6.00	1.05
C0660-049-2000-M	0.660	16.76	0.049	1.25	2.000	50.80	0.682	17.32	0.400	10.15	8.30	36.94	6.30	1.10	**C0660-049-2000-S**	0.796	20.21	6.32	28.11	5.25	0.92
C0660-049-2250-M	0.660	16.76	0.049	1.25	2.250	57.15	0.740	18.80	0.443	11.25	8.30	36.94	5.50	0.96	**C0660-049-2250-S**	0.871	22.12	6.32	28.11	4.58	0.80
C0660-049-2500-M	0.660	16.76	0.049	1.25	2.500	63.50	0.839	21.32	0.477	12.11	8.30	36.94	5.00	0.88	**C0660-049-2500-S**	0.983	24.96	6.32	28.11	4.17	0.73
C0660-049-2750-M	0.660	16.76	0.049	1.25	2.750	69.85	0.905	22.98	0.518	13.16	8.30	36.94	4.50	0.79	**C0660-049-2750-S**	1.064	27.03	6.32	28.11	3.75	0.66
C0660-049-3000-M	0.660	16.76	0.049	1.25	3.000	76.20	0.975	24.76	0.559	14.19	8.30	36.94	4.10	0.72	**C0660-049-3000-S**	1.150	29.20	6.32	28.11	3.42	0.60
C0660-055-0625-M	0.660	16.76	0.055	1.40	0.625	15.88	0.307	7.79	0.196	4.97	11.47	51.00	36.00	6.30	**C0660-055-0625-S**	0.334	8.49	8.72	38.78	29.99	5.25
C0660-055-0750-M	0.660	16.76	0.055	1.40	0.750	19.05	0.353	8.97	0.222	5.63	11.47	51.00	28.90	5.06	**C0660-055-0750-S**	0.388	9.85	8.72	38.78	24.07	4.21
C0660-055-0875-M	0.660	16.76	0.055	1.40	0.875	22.23	0.399	10.14	0.248	6.30	11.47	51.00	24.10	4.22	**C0660-055-0875-S**	0.441	11.19	8.72	38.78	20.08	3.51
C0660-055-1000-M	0.660	16.76	0.055	1.40	1.000	25.40	0.449	11.40	0.273	6.94	11.47	51.00	20.80	3.64	**C0660-055-1000-S**	0.497	12.62	8.72	38.78	17.33	3.03
C0660-055-1250-M	0.660	16.76	0.055	1.40	1.250	31.75	0.542	13.77	0.325	8.26	11.47	51.00	16.20	2.84	**C0660-055-1250-S**	0.604	15.34	8.72	38.78	13.50	2.36
C0660-055-1500-M	0.660	16.76	0.055	1.40	1.500	38.10	0.638	16.20	0.373	9.48	11.47	51.00	13.30	2.33	**C0660-055-1500-S**	0.713	18.11	8.72	38.78	11.08	1.94
C0660-055-1750-M	0.660	16.76	0.055	1.40	1.750	44.45	0.735	18.68	0.419	10.64	11.47	51.00	11.30	1.98	**C0660-055-1750-S**	0.824	20.92	8.72	38.78	9.41	1.65
C0660-055-2000-M	0.660	16.76	0.055	1.40	2.000	50.80	0.830	21.08	0.466	11.82	11.47	51.00	9.80	1.72	**C0660-055-2000-S**	0.932	23.67	8.72	38.78	8.16	1.43
C0660-055-2250-M	0.660	16.76	0.055	1.40	2.250	57.15	0.917	23.29	0.514	13.07	11.47	51.00	8.60	1.51	**C0660-055-2250-S**	1.033	26.24	8.72	38.78	7.16	1.25
C0660-055-2500-M	0.660	16.76	0.055	1.40	2.500	63.50	1.030	26.16	0.555	14.10	11.47	51.00	7.80	1.37	**C0660-055-2500-S**	1.158	29.42	8.72	38.78	6.50	1.14
C0660-055-2750-M	0.660	16.76	0.055	1.40	2.750	69.85	1.112	28.25	0.606	15.38	11.47	51.00	7.00	1.23	**C0660-055-2750-S**	1.255	31.87	8.72	38.78	5.83	1.02
C0660-055-3000-M	0.660	16.76	0.055	1.40	3.000	76.20	1.208	30.70	0.651	16.55	11.47	51.00	6.40	1.12	**C0660-055-3000-S**	1.365	34.66	8.72	38.78	5.33	0.93
C0660-063-0625-M	0.660	16.76	0.063	1.60	0.625	15.88	0.324	8.23	0.244	6.19	16.73	74.43	55.60	9.73	**C0660-063-0625-S**	0.351	8.91	12.69	56.47	46.32	8.11

FOR INFORMATION ON ALTERNATIVE FINISHES, SEE PAGE 311

Part Numbers with an "*" are squared and not ground. **Part Numbers in bold** represent the newly expanded Associated Spring RAYMOND compression spring offering.

MUSIC WIRE															STAINLESS STEEL					
Catalog #	Outside Diameter (OD)		Wire Diameter (d)		Free Length (L) Approx		Load Length (L_1)		Solid Height (Sh) Approx		Load (P) at L_1		Spring Rate (R)		Catalog #	Load Length (L_1)		Load (P) at L_1		Spring Rate (R)	
	in	mm	in	mm	in	mm	in	mm	in	mm	lb	N	lb/in	N/mm		in	mm	lb	N	lb/in	N/mm
C0660-063-0750-M	**0.660**	**16.76**	**0.063**	**1.60**	**0.750**	**19.05**	**0.374**	**9.50**	**0.279**	**7.08**	**16.73**	**74.43**	**44.50**	**7.79**	**C0660-063-0750-S**	**0.408**	**10.35**	**12.69**	**56.47**	**37.07**	**6.49**
C0660-063-0875-M	**0.660**	**16.76**	**0.063**	**1.60**	**0.875**	**22.23**	**0.424**	**10.77**	**0.314**	**7.97**	**16.73**	**74.43**	**37.10**	**6.49**	**C0660-063-0875-S**	**0.464**	**11.79**	**12.69**	**56.47**	**30.90**	**5.41**
C0660-063-1000-M	**0.660**	**16.76**	**0.063**	**1.60**	**1.000**	**25.40**	**0.474**	**12.03**	**0.349**	**8.86**	**16.73**	**74.43**	**31.80**	**5.57**	**C0660-063-1000-S**	**0.521**	**13.23**	**12.69**	**56.47**	**26.49**	**4.64**
C0660-063-1250-M	**0.660**	**16.76**	**0.063**	**1.60**	**1.250**	**31.75**	**0.573**	**14.54**	**0.417**	**10.60**	**16.73**	**74.43**	**24.70**	**4.32**	**C0660-063-1250-S**	**0.633**	**16.08**	**12.69**	**56.47**	**20.58**	**3.60**
C0660-063-1500-M	**0.660**	**16.76**	**0.063**	**1.60**	**1.500**	**38.10**	**0.672**	**17.06**	**0.481**	**12.21**	**16.73**	**74.43**	**20.20**	**3.54**	**C0660-063-1500-S**	**0.746**	**18.94**	**12.69**	**56.47**	**16.83**	**2.94**
C0660-063-1750-M	**0.660**	**16.76**	**0.063**	**1.60**	**1.750**	**44.45**	**0.771**	**19.59**	**0.544**	**13.82**	**16.73**	**74.43**	**17.10**	**2.99**	**C0660-063-1750-S**	**0.859**	**21.81**	**12.69**	**56.47**	**14.24**	**2.49**
C0660-063-2000-M	**0.660**	**16.76**	**0.063**	**1.60**	**2.000**	**50.80**	**0.869**	**22.08**	**0.608**	**15.44**	**16.73**	**74.43**	**14.80**	**2.59**	**C0660-063-2000-S**	**0.970**	**24.65**	**12.69**	**56.47**	**12.33**	**2.16**
C0660-063-2250-M	**0.660**	**16.76**	**0.063**	**1.60**	**2.250**	**57.15**	**0.973**	**24.71**	**0.670**	**17.01**	**16.73**	**74.43**	**13.10**	**2.29**	**C0660-063-2250-S**	**1.087**	**27.60**	**12.69**	**56.47**	**10.91**	**1.91**
C0660-063-2500-M	**0.660**	**16.76**	**0.063**	**1.60**	**2.500**	**63.50**	**1.070**	**27.17**	**0.734**	**18.64**	**16.73**	**74.43**	**11.70**	**2.05**	**C0660-063-2500-S**	**1.197**	**30.42**	**12.69**	**56.47**	**9.75**	**1.71**
C0660-063-2750-M	**0.660**	**16.76**	**0.063**	**1.60**	**2.750**	**69.85**	**1.171**	**29.75**	**0.796**	**20.23**	**16.73**	**74.43**	**10.60**	**1.86**	**C0660-063-2750-S**	**1.312**	**33.33**	**12.69**	**56.47**	**8.83**	**1.55**
C0660-063-3000-M	**0.660**	**16.76**	**0.063**	**1.60**	**3.000**	**76.20**	**1.275**	**32.38**	**0.858**	**21.80**	**16.73**	**74.43**	**9.70**	**1.70**	**C0660-063-3000-S**	**1.429**	**36.29**	**12.69**	**56.47**	**8.08**	**1.41**
C0660-067-0625-M	**0.660**	**16.76**	**0.067**	**1.70**	**0.625**	**15.88**	**0.344**	**8.74**	**0.263**	**6.68**	**19.85**	**88.30**	**70.70**	**12.37**	**C0660-067-0625-S**	**0.370**	**9.39**	**15.04**	**66.89**	**58.89**	**10.31**
C0660-067-0750-M	**0.660**	**16.76**	**0.067**	**1.70**	**0.750**	**19.05**	**0.398**	**10.11**	**0.302**	**7.67**	**19.85**	**88.30**	**56.40**	**9.87**	**C0660-067-0750-S**	**0.430**	**10.92**	**15.04**	**66.89**	**46.98**	**8.22**
C0660-067-0875-M	**0.660**	**16.76**	**0.067**	**1.70**	**0.875**	**22.23**	**0.452**	**11.47**	**0.341**	**8.66**	**19.85**	**88.30**	**46.90**	**8.21**	**C0660-067-0875-S**	**0.490**	**12.45**	**15.04**	**66.89**	**39.07**	**6.84**
C0660-067-1000-M	**0.660**	**16.76**	**0.067**	**1.70**	**1.000**	**25.40**	**0.505**	**12.83**	**0.380**	**9.66**	**19.85**	**88.30**	**40.10**	**7.02**	**C0660-067-1000-S**	**0.550**	**13.97**	**15.04**	**66.89**	**33.40**	**5.85**
C0660-067-1250-M	**0.660**	**16.76**	**0.067**	**1.70**	**1.250**	**31.75**	**0.612**	**15.54**	**0.455**	**11.56**	**19.85**	**88.30**	**31.10**	**5.44**	**C0660-067-1250-S**	**0.670**	**17.01**	**15.04**	**66.89**	**25.91**	**4.53**
C0660-067-1500-M	**0.660**	**16.76**	**0.067**	**1.70**	**1.500**	**38.10**	**0.722**	**18.33**	**0.524**	**13.31**	**19.85**	**88.30**	**25.50**	**4.46**	**C0660-067-1500-S**	**0.792**	**20.12**	**15.04**	**66.89**	**21.24**	**3.72**
C0660-067-1750-M	**0.660**	**16.76**	**0.067**	**1.70**	**1.750**	**44.45**	**0.827**	**21.00**	**0.595**	**15.12**	**19.85**	**88.30**	**21.50**	**3.76**	**C0660-067-1750-S**	**0.910**	**23.12**	**15.04**	**66.89**	**17.91**	**3.13**
C0660-067-2000-M	**0.660**	**16.76**	**0.067**	**1.70**	**2.000**	**50.80**	**0.933**	**23.69**	**0.666**	**16.92**	**19.85**	**88.30**	**18.60**	**3.26**	**C0660-067-2000-S**	**1.030**	**26.15**	**15.04**	**66.89**	**15.49**	**2.71**
C0660-067-2250-M	**0.660**	**16.76**	**0.067**	**1.70**	**2.250**	**57.15**	**1.047**	**26.59**	**0.733**	**18.62**	**19.85**	**88.30**	**16.50**	**2.89**	**C0660-067-2250-S**	**1.156**	**29.36**	**15.04**	**66.89**	**13.75**	**2.41**
C0660-067-2500-M	**0.660**	**16.76**	**0.067**	**1.70**	**2.500**	**63.50**	**1.150**	**29.20**	**0.805**	**20.46**	**19.85**	**88.30**	**14.70**	**2.57**	**C0660-067-2500-S**	**1.272**	**32.31**	**15.04**	**66.89**	**12.25**	**2.14**
C0660-067-2750-M	**0.660**	**16.76**	**0.067**	**1.70**	**2.750**	**69.85**	**1.257**	**31.94**	**0.875**	**22.24**	**19.85**	**88.30**	**13.30**	**2.33**	**C0660-067-2750-S**	**1.393**	**35.38**	**15.04**	**66.89**	**11.08**	**1.94**
C0660-067-3000-M	**0.660**	**16.76**	**0.067**	**1.70**	**3.000**	**76.20**	**1.359**	**34.53**	**0.948**	**24.09**	**19.85**	**88.30**	**12.10**	**2.12**	**C0660-067-3000-S**	**1.508**	**38.31**	**15.04**	**66.89**	**10.08**	**1.76**
C0660-072-0625-M	**0.660**	**16.76**	**0.072**	**1.83**	**0.625**	**15.88**	**0.368**	**9.33**	**0.287**	**7.30**	**24.23**	**107.78**	**94.10**	**16.47**	**C0660-072-0625-S**	**0.391**	**9.94**	**18.31**	**81.46**	**78.39**	**13.72**
C0660-072-0750-M	**0.660**	**16.76**	**0.072**	**1.83**	**0.750**	**19.05**	**0.426**	**10.81**	**0.331**	**8.41**	**24.23**	**107.78**	**74.70**	**13.07**	**C0660-072-0750-S**	**0.456**	**11.58**	**18.31**	**81.46**	**62.23**	**10.89**
C0660-072-0875-M	**0.660**	**16.76**	**0.072**	**1.83**	**0.875**	**22.23**	**0.484**	**12.30**	**0.375**	**9.53**	**24.23**	**107.78**	**62.00**	**10.85**	**C0660-072-0875-S**	**0.520**	**13.22**	**18.31**	**81.46**	**51.65**	**9.04**
C0660-072-1000-M	**0.660**	**16.76**	**0.072**	**1.83**	**1.000**	**25.40**	**0.543**	**13.79**	**0.419**	**10.64**	**24.23**	**107.78**	**53.00**	**9.28**	**C0660-072-1000-S**	**0.585**	**14.86**	**18.31**	**81.46**	**44.15**	**7.73**
C0660-072-1250-M	**0.660**	**16.76**	**0.072**	**1.83**	**1.250**	**31.75**	**0.659**	**16.74**	**0.502**	**12.74**	**24.23**	**107.78**	**41.00**	**7.18**	**C0660-072-1250-S**	**0.714**	**18.13**	**18.31**	**81.46**	**34.15**	**5.98**
C0660-072-1500-M	**0.660**	**16.76**	**0.072**	**1.83**	**1.500**	**38.10**	**0.777**	**19.73**	**0.580**	**14.73**	**24.23**	**107.78**	**33.50**	**5.86**	**C0660-072-1500-S**	**0.844**	**21.43**	**18.31**	**81.46**	**27.91**	**4.88**
C0660-072-1750-M	**0.660**	**16.76**	**0.072**	**1.83**	**1.750**	**44.45**	**0.891**	**22.63**	**0.661**	**16.78**	**24.23**	**107.78**	**28.20**	**4.94**	**C0660-072-1750-S**	**0.970**	**24.65**	**18.31**	**81.46**	**23.49**	**4.11**
C0660-072-2000-M	**0.660**	**16.76**	**0.072**	**1.83**	**2.000**	**50.80**	**1.011**	**25.68**	**0.738**	**18.73**	**24.23**	**107.78**	**24.50**	**4.29**	**C0660-072-2000-S**	**1.103**	**28.01**	**18.31**	**81.46**	**20.41**	**3.57**
C0660-072-2250-M	**0.660**	**16.76**	**0.072**	**1.83**	**2.250**	**57.15**	**1.123**	**28.53**	**0.819**	**20.81**	**24.23**	**107.78**	**21.50**	**3.76**	**C0660-072-2250-S**	**1.228**	**31.18**	**18.31**	**81.46**	**17.91**	**3.13**
C0660-072-2500-M	**0.660**	**16.76**	**0.072**	**1.83**	**2.500**	**63.50**	**1.238**	**31.45**	**0.899**	**22.85**	**24.23**	**107.78**	**19.20**	**3.36**	**C0660-072-2500-S**	**1.355**	**34.42**	**18.31**	**81.46**	**15.99**	**2.80**
C0660-072-2750-M	**0.660**	**16.76**	**0.072**	**1.83**	**2.750**	**69.85**	**1.365**	**34.68**	**0.972**	**24.69**	**24.23**	**107.78**	**17.50**	**3.06**	**C0660-072-2750-S**	**1.494**	**37.94**	**18.31**	**81.46**	**14.58**	**2.55**
C0660-072-3000-M	**0.660**	**16.76**	**0.072**	**1.83**	**3.000**	**76.20**	**1.476**	**37.49**	**1.055**	**26.79**	**24.23**	**107.78**	**15.90**	**2.78**	**C0660-072-3000-S**	**1.617**	**41.08**	**18.31**	**81.46**	**13.25**	**2.32**
D12300	0.679	17.25	0.049	1.25	1.594	40.50	0.358	9.10	0.271	6.88	12.19	54.23	9.89	1.73	D22300	0.358	9.10	10.15	45.17	8.23	1.44
D12310	0.679	17.25	0.049	1.25	2.441	62.00	0.508	12.90	0.369	9.38	12.19	54.23	6.29	1.10	D22310	0.508	12.90	10.15	45.17	5.26	0.92
D12320	0.679	17.25	0.049	1.25	3.701	94.00	0.728	18.50	0.517	13.13	12.19	54.23	4.11	0.72	D22320	0.728	18.50	10.15	45.17	3.43	0.60
D12330	0.679	17.25	0.049	1.25	5.512	140.00	1.024	26.00	0.714	18.13	12.19	54.23	2.74	0.48	D22330	1.024	26.00	10.15	45.17	2.29	0.40
D12340	0.679	17.25	0.049	1.25	8.071	205.00	1.469	37.30	1.009	25.63	12.19	54.23	1.83	0.32	D22340	1.469	37.30	10.15	45.17	1.54	0.27
C0688-105-0875-M	**0.688**	**17.48**	**0.105**	**2.67**	**0.875**	**22.23**	**0.640**	**16.25**	**0.558**	**14.18**	**65.67**	**292.13**	**279.21**	**48.86**	**C0688-105-0875-S**	**0.666**	**16.91**	**48.65**	**216.42**	**232.58**	**40.70**
C0688-105-1000-M	**0.688**	**17.48**	**0.105**	**2.67**	**1.000**	**25.40**	**0.721**	**18.30**	**0.631**	**16.03**	**65.67**	**292.13**	**235.03**	**41.13**	**C0688-105-1000-S**	**0.751**	**19.09**	**48.65**	**216.42**	**195.78**	**34.26**
C0688-105-1250-M	**0.688**	**17.48**	**0.105**	**2.67**	**1.250**	**31.75**	**0.882**	**22.41**	**0.765**	**19.43**	**65.67**	**292.13**	**178.53**	**31.24**	**C0688-105-1250-S**	**0.923**	**23.44**	**48.65**	**216.42**	**148.72**	**26.03**
C0688-105-1500-M	**0.688**	**17.48**	**0.105**	**2.67**	**1.500**	**38.10**	**1.044**	**26.51**	**0.896**	**22.76**	**65.67**	**292.13**	**143.93**	**25.19**	**C0688-105-1500-S**	**1.094**	**27.79**	**48.65**	**216.42**	**119.89**	**20.98**
C0688-105-1750-M	**0.688**	**17.48**	**0.105**	**2.67**	**1.750**	**44.45**	**1.205**	**30.61**	**1.027**	**26.08**	**65.67**	**292.13**	**120.57**	**21.10**	**C0688-105-1750-S**	**1.266**	**32.15**	**48.65**	**216.42**	**100.44**	**17.58**
C0688-105-2000-M	**0.688**	**17.48**	**0.105**	**2.67**	**2.000**	**50.80**	**1.367**	**34.72**	**1.158**	**29.41**	**65.67**	**292.13**	**103.73**	**18.15**	**C0688-105-2000-S**	**1.437**	**36.50**	**48.65**	**216.42**	**86.41**	**15.12**
C0688-105-2250-M	**0.688**	**17.48**	**0.105**	**2.67**	**2.250**	**57.15**	**1.528**	**38.82**	**1.289**	**32.73**	**65.67**	**292.13**	**91.02**	**15.93**	**C0688-105-2250-S**	**1.608**	**40.85**	**48.65**	**216.42**	**75.82**	**13.27**
C0688-105-2500-M	**0.688**	**17.48**	**0.105**	**2.67**	**2.500**	**63.50**	**1.690**	**42.93**	**1.420**	**36.06**	**65.67**	**292.13**	**81.08**	**14.19**	**C0688-105-2500-S**	**1.780**	**45.20**	**48.65**	**216.42**	**67.54**	**11.82**
C0688-105-2750-M	**0.688**	**17.48**	**0.105**	**2.67**	**2.750**	**69.85**	**1.852**	**47.03**	**1.550**	**39.38**	**65.67**	**292.13**	**73.10**	**12.79**	**C0688-105-2750-S**	**1.951**	**49.56**	**48.65**	**216.42**	**60.89**	**10.66**
C0688-105-3000-M	**0.688**	**17.48**	**0.105**	**2.67**	**3.000**	**76.20**	**2.013**	**51.13**	**1.681**	**42.70**	**65.67**	**292.13**	**66.55**	**11.65**	**C0688-105-3000-S**	**2.122**	**53.91**	**48.65**	**216.42**	**55.44**	**9.70**
C0688-105-3250-M	**0.688**	**17.48**	**0.105**	**2.67**	**3.250**	**82.55**	**2.175**	**55.24**	**1.812**	**46.03**	**65.67**	**292.13**	**61.08**	**10.69**	**C0688-105-3250-S**	**2.294**	**58.26**	**48.65**	**216.42**	**50.88**	**8.90**
C0688-105-3500-M	**0.688**	**17.48**	**0.105**	**2.67**	**3.500**	**88.90**	**2.336**	**59.34**	**1.943**	**49.35**	**65.67**	**292.13**	**56.44**	**9.88**	**C0688-105-3500-S**	**2.465**	**62.61**	**48.65**	**216.42**	**47.02**	**8.23**
C0688-105-4000-M	**0.688**	**17.48**	**0.105**	**2.67**	**4.000**	**101.60**	**2.659**	**67.55**	**2.205**	**56.00**	**65.67**	**292.13**	**48.99**	**8.57**	**C0688-105-4000-S**	**2.808**	**71.32**	**48.65**	**216.42**	**40.81**	**7.14**
D12500	0.693	17.60	0.063	1.60	1.339	34.00	0.433	11.00	0.346	8.80	23.81	105.91	26.57	4.65	D22500	0.433	11.00	19.83	88.22	22.11	3.87
D12510	0.693	17.60	0.063	1.60	2.028	51.50	0.610	15.50	0.472	12.00	23.81	105.91	16.91	2.96	D22510	0.610	15.50	19.83	88.22	14.11	2.47
D12520	0.693	17.60	0.063	1.60	3.051	77.50	0.874	22.20	0.661	16.80	23.81	105.91	10.97	1.92	D22520	0.874	22.20	19.83	88.22	9.14	1.60
D12530	0.693	17.60	0.063	1.60	4.331	110.00	1.228	31.20	0.913	23.20	23.81	105.91	7.43	1.30	D22530	1.228	31.20	19.83	88.22	6.17	1.08
D12540	0.693	17.60	0.063	1.60	6.496	165.00	1.756	44.60	1.291	32.80	23.81	105.91	5.03	0.88	D22540	1.756	44.60	19.83	88.22	4.17	0.73
C0705-055-1375-M	**0.705**	**17.91**	**0.055**	**1.40**	**1.375**	**34.93**	**0.492**	**12.49**	**0.353**	**8.96**	**10.29**	**45.78**	**11.65**	**2.04**	**C0705-055-1375-S**	**0.567**	**14.41**	**8.18**	**36.40**	**10.13**	**1.77**
C0705-055-1500-M	**0.705**	**17.91**	**0.055**	**1.40**	**1.500**	**38.10**	**0.530**	**13.45**	**0.376**	**9.56**	**10.29**	**45.78**	**10.61**	**1.86**	**C0705-055-1500-S**	**0.613**	**15.56**	**8.18**	**36.40**	**9.22**	**1.61**
C0705-055-1625-M	**0.705**	**17.91**	**0.055**	**1.40**	**1.625**	**41.28**	**0.567**	**14.41**	**0.400**	**10.15**	**10.29**	**45.78**	**9.73**	**1.70**	**C0705-055-1625-S**	**0.658**	**16.71**	**8.18**	**36.40**	**8.46**	**1.48**
C0705-055-1750-M	**0.705**	**17.91**	**0.055**	**1.40**	**1.750**	**44.45**	**0.605**	**15.37**	**0.423**	**10.75**	**10.29**	**45.78**	**8.99**	**1.57**	**C0705-055-1750-S**	**0.703**	**17.86**	**8.18**	**36.40**	**7.82**	**1.37**
C0705-055-1875-M	**0.705**	**17.91**	**0.055**	**1.40**	**1.875**	**47.63**	**0.643**	**16.33**	**0.447**	**11.35**	**10.29**	**45.78**	**8.35**	**1.46**	**C0705-055-1875-S**	**0.748**	**19.01**	**8.18**	**36.40**	**7.26**	**1.27**
C0705-055-2000-M	**0.705**	**17.91**	**0.055**	**1.40**	**2.000**	**50.80**	**0.681**	**17.29**	**0.470**	**11.94**	**10.29**	**45.78**	**7.80**	**1.37**	**C0705-055-2000-S**	**0.793**	**20.15**	**8.18**	**36.40**	**6.78**	**1.19**

Part Numbers with an "*" are squared and not ground. **Part Numbers in bold** represent the newly expanded Associated Spring RAYMOND compression spring offering.

MUSIC WIRE															STAINLESS STEEL						
Catalog #	Outside Diameter (OD)		Wire Diameter (d)		Free Length (L) Approx		Load Length (L_1)		Solid Height (Sh) Approx		Load (P) at L_1		Spring Rate (R)		Catalog #	Load Length (L_1)		Load (P) at L_1		Spring Rate (R)	
	in	mm	in	mm	in	mm	in	mm	in	mm	lb	N	lb/in	N/mm		in	mm	lb	N	lb/in	N/mm
C0705-055-2125-M	0.705	17.91	0.055	1.40	2.125	53.98	0.718	18.25	0.494	12.54	10.29	45.78	7.32	1.28	**C0705-055-2125-S**	0.839	21.30	8.18	36.40	6.36	1.11
C0705-055-2250-M	0.705	17.91	0.055	1.40	2.250	57.15	0.756	19.20	0.517	13.13	10.29	45.78	6.89	1.21	**C0705-055-2250-S**	0.884	22.45	8.18	36.40	5.99	1.05
C0705-055-2375-M	0.705	17.91	0.055	1.40	2.375	60.33	0.794	20.16	0.540	13.73	10.29	45.78	6.51	1.14	**C0705-055-2375-S**	0.929	23.60	8.18	36.40	5.66	0.99
C0705-055-2500-M	0.705	17.91	0.055	1.40	2.500	63.50	0.832	21.12	0.564	14.32	10.29	45.78	6.17	1.08	**C0705-055-2500-S**	0.974	24.75	8.18	36.40	5.36	0.94
C0705-055-2625-M	0.705	17.91	0.055	1.40	2.625	66.68	0.869	22.08	0.587	14.92	10.29	45.78	5.86	1.03	**C0705-055-2625-S**	1.019	25.89	8.18	36.40	5.10	0.89
C0705-055-2750-M	0.705	17.91	0.055	1.40	2.750	69.85	0.907	23.04	0.611	15.52	10.29	45.78	5.58	0.98	**C0705-055-2750-S**	1.065	27.04	8.18	36.40	4.86	0.85
C0705-055-2875-M	0.705	17.91	0.055	1.40	2.875	73.03	0.945	24.00	0.634	16.11	10.29	45.78	5.33	0.93	**C0705-055-2875-S**	1.110	28.19	8.18	36.40	4.64	0.81
C0705-055-3000-M	0.705	17.91	0.055	1.40	3.000	76.20	0.982	24.95	0.658	16.71	10.29	45.78	5.10	0.89	**C0705-055-3000-S**	1.155	29.34	8.18	36.40	4.44	0.78
C0705-055-3250-M	0.705	17.91	0.055	1.40	3.250	82.55	1.058	26.87	0.705	17.90	10.29	45.78	4.70	0.82	**C0705-055-3250-S**	1.245	31.63	8.18	36.40	4.08	0.71
C0705-055-3500-M	0.705	17.91	0.055	1.40	3.500	88.90	1.133	28.79	0.752	19.09	10.29	45.78	4.35	0.76	**C0705-055-3500-S**	1.336	33.93	8.18	36.40	3.78	0.66
C0705-055-3750-M	0.705	17.91	0.055	1.40	3.750	95.25	1.209	30.71	0.798	20.28	10.29	45.78	4.05	0.71	**C0705-055-3750-S**	1.426	36.23	8.18	36.40	3.52	0.62
C0705-055-4000-M	0.705	17.91	0.055	1.40	4.000	101.60	1.284	32.62	0.845	21.47	10.29	45.78	3.79	0.66	**C0705-055-4000-S**	1.517	38.52	8.18	36.40	3.30	0.58
C0705-055-4250-M	0.705	17.91	0.055	1.40	4.250	107.95	1.360	34.54	0.892	22.66	10.29	45.78	3.56	0.62	**C0705-055-4250-S**	1.607	40.82	8.18	36.40	3.10	0.54
C0705-055-4500-M	0.705	17.91	0.055	1.40	4.500	114.30	1.435	36.46	0.939	23.86	10.29	45.78	3.36	0.59	**C0705-055-4500-S**	1.697	43.12	8.18	36.40	2.92	0.51
C0705-055-4750-M	0.705	17.91	0.055	1.40	4.750	120.65	1.511	38.37	0.986	25.05	10.29	45.78	3.18	0.56	**C0705-055-4750-S**	1.788	45.41	8.18	36.40	2.76	0.48
C0705-055-5000-M	0.705	17.91	0.055	1.40	5.000	127.00	1.586	40.29	1.033	26.24	10.29	45.78	3.02	0.53	**C0705-055-5000-S**	1.878	47.71	8.18	36.40	2.62	0.46
C0705-055-5250-M	0.705	17.91	0.055	1.40	5.250	133.35	1.662	42.21	1.080	27.43	10.29	45.78	2.87	0.50	**C0705-055-5250-S**	1.969	50.00	8.18	36.40	2.49	0.44
C0705-055-5500-M	0.705	17.91	0.055	1.40	5.500	139.70	1.737	44.12	1.127	28.62	10.29	45.78	2.74	0.48	**C0705-055-5500-S**	2.059	52.30	8.18	36.40	2.38	0.42
C0705-055-5750-M	0.705	17.91	0.055	1.40	5.750	146.05	1.813	46.04	1.174	29.81	10.29	45.78	2.61	0.46	**C0705-055-5750-S**	2.149	54.60	8.18	36.40	2.27	0.40
C0705-055-6000-M	0.705	17.91	0.055	1.40	6.000	152.40	1.888	47.96	1.221	31.00	10.29	45.78	2.50	0.44	**C0705-055-6000-S**	2.240	56.89	8.18	36.40	2.18	0.38
C0705-055-6250-M	0.705	17.91	0.055	1.40	6.250	158.75	1.964	49.88	1.268	32.20	10.29	45.78	2.40	0.42	**C0705-055-6250-S**	2.330	59.19	8.18	36.40	2.09	0.37
C0705-055-6500-M	0.705	17.91	0.055	1.40	6.500	165.10	2.039	51.79	1.314	33.39	10.29	45.78	2.31	0.40	**C0705-055-6500-S**	2.421	61.49	8.18	36.40	2.01	0.35
C0705-055-6750-M	0.705	17.91	0.055	1.40	6.750	171.45	2.115	53.71	1.361	34.58	10.29	45.78	2.22	0.39	**C0705-055-6750-S**	2.511	63.78	8.18	36.40	1.93	0.34
C0705-055-7000-M	0.705	17.91	0.055	1.40	7.000	177.80	2.190	55.63	1.408	35.77	10.29	45.78	2.14	0.37	**C0705-055-7000-S**	2.601	66.08	8.18	36.40	1.86	0.33
C0705-055-7500-M	0.705	17.91	0.055	1.40	7.500	190.50	2.341	59.46	1.502	38.15	10.29	45.78	2.00	0.35	**C0705-055-7500-S**	2.782	70.67	8.18	36.40	1.74	0.30
C0705-055-8000-M	0.705	17.91	0.055	1.40	8.000	203.20	2.492	63.29	1.596	40.54	10.29	45.78	1.87	0.33	**C0705-055-8000-S**	2.963	75.26	8.18	36.40	1.63	0.28
C0705-055-8500-M	0.705	17.91	0.055	1.40	8.500	215.90	2.643	67.13	1.690	42.92	10.29	45.78	1.76	0.31	**C0705-055-8500-S**	3.144	79.85	8.18	36.40	1.53	0.27
C0705-055-9000-M	0.705	17.91	0.055	1.40	9.000	228.60	2.794	70.96	1.784	45.30	10.29	45.78	1.66	0.29	**C0705-055-9000-S**	3.325	84.45	8.18	36.40	1.44	0.25
C0705-055-9500-M	0.705	17.91	0.055	1.40	9.500	241.30	2.945	74.80	1.877	47.68	10.29	45.78	1.57	0.27	**C0705-055-9500-S**	3.505	89.04	8.18	36.40	1.37	0.24
C0705-059-1375-M	0.705	17.91	0.059	1.50	1.375	34.93	0.526	13.37	0.395	10.04	12.52	55.69	14.75	2.58	**C0705-059-1375-S**	0.600	15.23	9.94	44.24	12.83	2.24
C0705-059-1500-M	0.705	17.91	0.059	1.50	1.500	38.10	0.567	14.40	0.422	10.73	12.52	55.69	13.42	2.35	**C0705-059-1500-S**	0.648	16.45	9.94	44.24	11.67	2.04
C0705-059-1625-M	0.705	17.91	0.059	1.50	1.625	41.28	0.607	15.43	0.449	11.41	12.52	55.69	12.30	2.15	**C0705-059-1625-S**	0.695	17.66	9.94	44.24	10.70	1.87
C0705-059-1750-M	0.705	17.91	0.059	1.50	1.750	44.45	0.648	16.46	0.476	12.10	12.52	55.69	11.36	1.99	**C0705-059-1750-S**	0.743	18.88	9.94	44.24	9.88	1.73
C0705-059-1875-M	0.705	17.91	0.059	1.50	1.875	47.63	0.689	17.49	0.503	12.78	12.52	55.69	10.55	1.85	**C0705-059-1875-S**	0.791	20.10	9.94	44.24	9.18	1.61
C0705-059-2000-M	0.705	17.91	0.059	1.50	2.000	50.80	0.729	18.52	0.530	13.47	12.52	55.69	9.85	1.72	**C0705-059-2000-S**	0.839	21.31	9.94	44.24	8.57	1.50
C0705-059-2125-M	0.705	17.91	0.059	1.50	2.125	53.98	0.770	19.55	0.557	14.15	12.52	55.69	9.24	1.62	**C0705-059-2125-S**	0.887	22.53	9.94	44.24	8.03	1.41
C0705-059-2250-M	0.705	17.91	0.059	1.50	2.250	57.15	0.810	20.58	0.584	14.84	12.52	55.69	8.70	1.52	**C0705-059-2250-S**	0.935	23.75	9.94	44.24	7.56	1.32
C0705-059-2375-M	0.705	17.91	0.059	1.50	2.375	60.33	0.851	21.62	0.611	15.52	12.52	55.69	8.22	1.44	**C0705-059-2375-S**	0.983	24.96	9.94	44.24	7.14	1.25
C0705-059-2500-M	0.705	17.91	0.059	1.50	2.500	63.50	0.892	22.65	0.638	16.21	12.52	55.69	7.78	1.36	**C0705-059-2500-S**	1.031	26.18	9.94	44.24	6.77	1.18
C0705-059-2625-M	0.705	17.91	0.059	1.50	2.625	66.68	0.932	23.68	0.665	16.89	12.52	55.69	7.40	1.29	**C0705-059-2625-S**	1.079	27.40	9.94	44.24	6.43	1.13
C0705-059-2750-M	0.705	17.91	0.059	1.50	2.750	69.85	0.973	24.71	0.692	17.58	12.52	55.69	7.04	1.23	**C0705-059-2750-S**	1.126	28.61	9.94	44.24	6.13	1.07
C0705-059-2875-M	0.705	17.91	0.059	1.50	2.875	73.03	1.013	25.74	0.719	18.27	12.52	55.69	6.73	1.18	**C0705-059-2875-S**	1.174	29.83	9.94	44.24	5.85	1.02
C0705-059-3000-M	0.705	17.91	0.059	1.50	3.000	76.20	1.054	26.77	0.746	18.95	12.52	55.69	6.43	1.13	**C0705-059-3000-S**	1.222	31.04	9.94	44.24	5.59	0.98
C0705-059-3250-M	0.705	17.91	0.059	1.50	3.250	82.55	1.135	28.83	0.800	20.32	12.52	55.69	5.92	1.04	**C0705-059-3250-S**	1.318	33.48	9.94	44.24	5.15	0.90
C0705-059-3500-M	0.705	17.91	0.059	1.50	3.500	88.90	1.216	30.90	0.854	21.69	12.52	55.69	5.48	0.96	**C0705-059-3500-S**	1.414	35.91	9.94	44.24	4.77	0.83
C0705-059-3750-M	0.705	17.91	0.059	1.50	3.750	95.25	1.298	32.96	0.908	23.06	12.52	55.69	5.11	0.89	**C0705-059-3750-S**	1.510	38.34	9.94	44.24	4.44	0.78
C0705-059-4000-M	0.705	17.91	0.059	1.50	4.000	101.60	1.379	35.02	0.962	24.43	12.52	55.69	4.78	0.84	**C0705-059-4000-S**	1.605	40.78	9.94	44.24	4.15	0.73
C0705-059-4250-M	0.705	17.91	0.059	1.50	4.250	107.95	1.460	37.08	1.016	25.81	12.52	55.69	4.49	0.79	**C0705-059-4250-S**	1.701	43.21	9.94	44.24	3.90	0.68
C0705-059-4500-M	0.705	17.91	0.059	1.50	4.500	114.30	1.541	39.15	1.070	27.18	12.52	55.69	4.23	0.74	**C0705-059-4500-S**	1.797	45.64	9.94	44.24	3.68	0.64
C0705-059-4750-M	0.705	17.91	0.059	1.50	4.750	120.65	1.622	41.21	1.124	28.55	12.52	55.69	4.00	0.70	**C0705-059-4750-S**	1.893	48.08	9.94	44.24	3.48	0.61
C0705-059-5000-M	0.705	17.91	0.059	1.50	5.000	127.00	1.704	43.27	1.178	29.92	12.52	55.69	3.80	0.66	**C0705-059-5000-S**	1.989	50.51	9.94	44.24	3.30	0.58
C0705-059-5250-M	0.705	17.91	0.059	1.50	5.250	133.35	1.785	45.33	1.232	31.29	12.52	55.69	3.61	0.63	**C0705-059-5250-S**	2.084	52.94	9.94	44.24	3.14	0.55
C0705-059-5500-M	0.705	17.91	0.059	1.50	5.500	139.70	1.866	47.39	1.286	32.66	12.52	55.69	3.45	0.60	**C0705-059-5500-S**	2.180	55.37	9.94	44.24	3.00	0.52
C0705-059-5750-M	0.705	17.91	0.059	1.50	5.750	146.05	1.947	49.46	1.340	34.03	12.52	55.69	3.29	0.58	**C0705-059-5750-S**	2.276	57.81	9.94	44.24	2.86	0.50
C0705-059-6000-M	0.705	17.91	0.059	1.50	6.000	152.40	2.028	51.52	1.394	35.40	12.52	55.69	3.15	0.55	**C0705-059-6000-S**	2.372	60.24	9.94	44.24	2.74	0.48
C0705-059-6250-M	0.705	17.91	0.059	1.50	6.250	158.75	2.110	53.58	1.448	36.77	12.52	55.69	3.02	0.53	**C0705-059-6250-S**	2.467	62.67	9.94	44.24	2.63	0.46
C0705-059-6500-M	0.705	17.91	0.059	1.50	6.500	165.10	2.191	55.64	1.502	38.14	12.52	55.69	2.91	0.51	**C0705-059-6500-S**	2.563	65.11	9.94	44.24	2.53	0.44
C0705-059-6750-M	0.705	17.91	0.059	1.50	6.750	171.45	2.272	57.71	1.556	39.52	12.52	55.69	2.80	0.49	**C0705-059-6750-S**	2.659	67.54	9.94	44.24	2.43	0.43
C0705-059-7000-M	0.705	17.91	0.059	1.50	7.000	177.80	2.353	59.77	1.610	40.89	12.52	55.69	2.69	0.47	**C0705-059-7000-S**	2.755	69.97	9.94	44.24	2.34	0.41
C0705-059-7500-M	0.705	17.91	0.059	1.50	7.500	190.50	2.515	63.89	1.718	43.63	12.52	55.69	2.51	0.44	**C0705-059-7500-S**	2.946	74.84	9.94	44.24	2.18	0.38
C0705-059-8000-M	0.705	17.91	0.059	1.50	8.000	203.20	2.678	68.02	1.826	46.37	12.52	55.69	2.35	0.41	**C0705-059-8000-S**	3.138	79.70	9.94	44.24	2.05	0.36
C0705-059-8500-M	0.705	17.91	0.059	1.50	8.500	215.90	2.840	72.14	1.934	49.11	12.52	55.69	2.21	0.39	**C0705-059-8500-S**	3.330	84.57	9.94	44.24	1.92	0.34
C0705-059-9000-M	0.705	17.91	0.059	1.50	9.000	228.60	3.003	76.27	2.041	51.85	12.52	55.69	2.09	0.37	**C0705-059-9000-S**	3.521	89.44	9.94	44.24	1.82	0.32
C0705-059-9500-M	0.705	17.91	0.059	1.50	9.500	241.30	3.165	80.39	2.149	54.60	12.52	55.69	1.98	0.35	**C0705-059-9500-S**	3.713	94.30	9.94	44.24	1.72	0.30

FOR INFORMATION ON ALTERNATIVE FINISHES, SEE PAGE 311

Part Numbers with an "*" are squared and not ground. **Part Numbers in bold** represent the newly expanded Associated Spring RAYMOND compression spring offering.

MUSIC WIRE															STAINLESS STEEL						
Catalog #	Outside Diameter (OD)		Wire Diameter (d)		Free Length (L) Approx		Load Length (L_1)		Solid Height (Sh) Approx		Load (P) at L_1		Spring Rate (R)		Catalog #	Load Length (L_1)		Load (P) at L_1		Spring Rate (R)	
	in	mm	in	mm	in	mm	in	mm	in	mm	lb	N	lb/in	N/mm		in	mm	lb	N	lb/in	N/mm
C0705-063-1250-M	**0.705**	**17.91**	**0.063**	**1.60**	**1.250**	**31.75**	**0.518**	**13.15**	**0.408**	**10.37**	**15.03**	**66.85**	**20.53**	**3.59**	**C0705-063-1250-S**	**0.582**	**14.78**	**11.92**	**53.04**	**17.85**	**3.12**
C0705-063-1375-M	**0.705**	**17.91**	**0.063**	**1.60**	**1.375**	**34.93**	**0.561**	**14.26**	**0.439**	**11.14**	**15.03**	**66.85**	**18.47**	**3.23**	**C0705-063-1375-S**	**0.633**	**16.07**	**11.92**	**53.04**	**16.06**	**2.81**
C0705-063-1500-M	**0.705**	**17.91**	**0.063**	**1.60**	**1.500**	**38.10**	**0.605**	**15.37**	**0.469**	**11.92**	**15.03**	**66.85**	**16.79**	**2.94**	**C0705-063-1500-S**	**0.683**	**17.36**	**11.92**	**53.04**	**14.60**	**2.56**
C0705-063-1625-M	**0.705**	**17.91**	**0.063**	**1.60**	**1.625**	**41.28**	**0.649**	**16.47**	**0.500**	**12.70**	**15.03**	**66.85**	**15.39**	**2.69**	**C0705-063-1625-S**	**0.734**	**18.65**	**11.92**	**53.04**	**13.38**	**2.34**
C0705-063-1750-M	**0.705**	**17.91**	**0.063**	**1.60**	**1.750**	**44.45**	**0.692**	**17.58**	**0.531**	**13.48**	**15.03**	**66.85**	**14.21**	**2.49**	**C0705-063-1750-S**	**0.785**	**19.94**	**11.92**	**53.04**	**12.35**	**2.16**
C0705-063-1875-M	**0.705**	**17.91**	**0.063**	**1.60**	**1.875**	**47.63**	**0.736**	**18.69**	**0.561**	**14.26**	**15.03**	**66.85**	**13.19**	**2.31**	**C0705-063-1875-S**	**0.836**	**21.22**	**11.92**	**53.04**	**11.47**	**2.01**
C0705-063-2000-M	**0.705**	**17.91**	**0.063**	**1.60**	**2.000**	**50.80**	**0.779**	**19.79**	**0.592**	**15.04**	**15.03**	**66.85**	**12.31**	**2.15**	**C0705-063-2000-S**	**0.886**	**22.51**	**11.92**	**53.04**	**10.71**	**1.87**
C0705-063-2125-M	**0.705**	**17.91**	**0.063**	**1.60**	**2.125**	**53.98**	**0.823**	**20.90**	**0.623**	**15.82**	**15.03**	**66.85**	**11.54**	**2.02**	**C0705-063-2125-S**	**0.937**	**23.80**	**11.92**	**53.04**	**10.04**	**1.76**
C0705-063-2250-M	**0.705**	**17.91**	**0.063**	**1.60**	**2.250**	**57.15**	**0.866**	**22.01**	**0.653**	**16.60**	**15.03**	**66.85**	**10.86**	**1.90**	**C0705-063-2250-S**	**0.988**	**25.09**	**11.92**	**53.04**	**9.45**	**1.65**
C0705-063-2375-M	**0.705**	**17.91**	**0.063**	**1.60**	**2.375**	**60.33**	**0.910**	**23.12**	**0.684**	**17.38**	**15.03**	**66.85**	**10.26**	**1.80**	**C0705-063-2375-S**	**1.038**	**26.38**	**11.92**	**53.04**	**8.92**	**1.56**
C0705-063-2500-M	**0.705**	**17.91**	**0.063**	**1.60**	**2.500**	**63.50**	**0.954**	**24.22**	**0.715**	**18.16**	**15.03**	**66.85**	**9.72**	**1.70**	**C0705-063-2500-S**	**1.089**	**27.66**	**11.92**	**53.04**	**8.45**	**1.48**
C0705-063-2625-M	**0.705**	**17.91**	**0.063**	**1.60**	**2.625**	**66.68**	**0.997**	**25.33**	**0.745**	**18.93**	**15.03**	**66.85**	**9.23**	**1.62**	**C0705-063-2625-S**	**1.140**	**28.95**	**11.92**	**53.04**	**8.03**	**1.40**
C0705-063-2750-M	**0.705**	**17.91**	**0.063**	**1.60**	**2.750**	**69.85**	**1.041**	**26.44**	**0.776**	**19.71**	**15.03**	**66.85**	**8.79**	**1.54**	**C0705-063-2750-S**	**1.191**	**30.24**	**11.92**	**53.04**	**7.65**	**1.34**
C0705-063-2875-M	**0.705**	**17.91**	**0.063**	**1.60**	**2.875**	**73.03**	**1.084**	**27.54**	**0.807**	**20.49**	**15.03**	**66.85**	**8.39**	**1.47**	**C0705-063-2875-S**	**1.241**	**31.53**	**11.92**	**53.04**	**7.30**	**1.28**
C0705-063-3000-M	**0.705**	**17.91**	**0.063**	**1.60**	**3.000**	**76.20**	**1.128**	**28.65**	**0.837**	**21.27**	**15.03**	**66.85**	**8.03**	**1.40**	**C0705-063-3000-S**	**1.292**	**32.82**	**11.92**	**53.04**	**6.98**	**1.22**
C0705-063-3250-M	**0.705**	**17.91**	**0.063**	**1.60**	**3.250**	**82.55**	**1.215**	**30.86**	**0.899**	**22.83**	**15.03**	**66.85**	**7.39**	**1.29**	**C0705-063-3250-S**	**1.393**	**35.39**	**11.92**	**53.04**	**6.42**	**1.12**
C0705-063-3500-M	**0.705**	**17.91**	**0.063**	**1.60**	**3.500**	**88.90**	**1.302**	**33.08**	**0.960**	**24.39**	**15.03**	**66.85**	**6.84**	**1.20**	**C0705-063-3500-S**	**1.495**	**37.97**	**11.92**	**53.04**	**5.95**	**1.04**
C0705-063-3750-M	**0.705**	**17.91**	**0.063**	**1.60**	**3.750**	**95.25**	**1.389**	**35.29**	**1.021**	**25.95**	**15.03**	**66.85**	**6.37**	**1.11**	**C0705-063-3750-S**	**1.596**	**40.55**	**11.92**	**53.04**	**5.54**	**0.97**
C0705-063-4000-M	**0.705**	**17.91**	**0.063**	**1.60**	**4.000**	**101.60**	**1.477**	**37.51**	**1.083**	**27.50**	**15.03**	**66.85**	**5.96**	**1.04**	**C0705-063-4000-S**	**1.698**	**43.12**	**11.92**	**53.04**	**5.18**	**0.91**
C0705-063-4250-M	**0.705**	**17.91**	**0.063**	**1.60**	**4.250**	**107.95**	**1.564**	**39.72**	**1.144**	**29.06**	**15.03**	**66.85**	**5.60**	**0.98**	**C0705-063-4250-S**	**1.799**	**45.70**	**11.92**	**53.04**	**4.87**	**0.85**
C0705-063-4500-M	**0.705**	**17.91**	**0.063**	**1.60**	**4.500**	**114.30**	**1.651**	**41.93**	**1.206**	**30.62**	**15.03**	**66.85**	**5.28**	**0.92**	**C0705-063-4500-S**	**1.901**	**48.27**	**11.92**	**53.04**	**4.59**	**0.80**
C0705-063-4750-M	**0.705**	**17.91**	**0.063**	**1.60**	**4.750**	**120.65**	**1.738**	**44.15**	**1.267**	**32.18**	**15.03**	**66.85**	**4.99**	**0.87**	**C0705-063-4750-S**	**2.002**	**50.85**	**11.92**	**53.04**	**4.34**	**0.76**
C0705-063-5000-M	**0.705**	**17.91**	**0.063**	**1.60**	**5.000**	**127.00**	**1.825**	**46.36**	**1.328**	**33.74**	**15.03**	**66.85**	**4.73**	**0.83**	**C0705-063-5000-S**	**2.103**	**53.43**	**11.92**	**53.04**	**4.12**	**0.72**
C0705-063-5250-M	**0.705**	**17.91**	**0.063**	**1.60**	**5.250**	**133.35**	**1.912**	**48.57**	**1.390**	**35.29**	**15.03**	**66.85**	**4.50**	**0.79**	**C0705-063-5250-S**	**2.205**	**56.00**	**11.92**	**53.04**	**3.92**	**0.69**
C0705-063-5500-M	**0.705**	**17.91**	**0.063**	**1.60**	**5.500**	**139.70**	**2.000**	**50.79**	**1.451**	**36.85**	**15.03**	**66.85**	**4.29**	**0.75**	**C0705-063-5500-S**	**2.306**	**58.58**	**11.92**	**53.04**	**3.73**	**0.65**
C0705-063-5750-M	**0.705**	**17.91**	**0.063**	**1.60**	**5.750**	**146.05**	**2.087**	**53.00**	**1.512**	**38.41**	**15.03**	**66.85**	**4.10**	**0.72**	**C0705-063-5750-S**	**2.408**	**61.16**	**11.92**	**53.04**	**3.57**	**0.62**
C0705-063-6000-M	**0.705**	**17.91**	**0.063**	**1.60**	**6.000**	**152.40**	**2.174**	**55.22**	**1.574**	**39.97**	**15.03**	**66.85**	**3.93**	**0.69**	**C0705-063-6000-S**	**2.509**	**63.73**	**11.92**	**53.04**	**3.42**	**0.60**
C0705-063-6250-M	**0.705**	**17.91**	**0.063**	**1.60**	**6.250**	**158.75**	**2.261**	**57.43**	**1.635**	**41.53**	**15.03**	**66.85**	**3.77**	**0.66**	**C0705-063-6250-S**	**2.611**	**66.31**	**11.92**	**53.04**	**3.28**	**0.57**
C0705-063-6500-M	**0.705**	**17.91**	**0.063**	**1.60**	**6.500**	**165.10**	**2.348**	**59.64**	**1.696**	**43.08**	**15.03**	**66.85**	**3.62**	**0.63**	**C0705-063-6500-S**	**2.712**	**68.88**	**11.92**	**53.04**	**3.15**	**0.55**
C0705-063-6750-M	**0.705**	**17.91**	**0.063**	**1.60**	**6.750**	**171.45**	**2.435**	**61.86**	**1.758**	**44.64**	**15.03**	**66.85**	**3.48**	**0.61**	**C0705-063-6750-S**	**2.813**	**71.46**	**11.92**	**53.04**	**3.03**	**0.53**
C0705-063-7000-M	**0.705**	**17.91**	**0.063**	**1.60**	**7.000**	**177.80**	**2.522**	**64.07**	**1.819**	**46.20**	**15.03**	**66.85**	**3.36**	**0.59**	**C0705-063-7000-S**	**2.915**	**74.04**	**11.92**	**53.04**	**2.92**	**0.51**
C0705-063-7500-M	**0.705**	**17.91**	**0.063**	**1.60**	**7.500**	**190.50**	**2.697**	**68.50**	**1.942**	**49.32**	**15.03**	**66.85**	**3.13**	**0.55**	**C0705-063-7500-S**	**3.118**	**79.19**	**11.92**	**53.04**	**2.72**	**0.48**
C0705-063-8000-M	**0.705**	**17.91**	**0.063**	**1.60**	**8.000**	**203.20**	**2.871**	**72.93**	**2.064**	**52.43**	**15.03**	**66.85**	**2.93**	**0.51**	**C0705-063-8000-S**	**3.321**	**84.34**	**11.92**	**53.04**	**2.55**	**0.45**
C0705-063-8500-M	**0.705**	**17.91**	**0.063**	**1.60**	**8.500**	**215.90**	**3.045**	**77.35**	**2.187**	**55.55**	**15.03**	**66.85**	**2.76**	**0.48**	**C0705-063-8500-S**	**3.523**	**89.49**	**11.92**	**53.04**	**2.40**	**0.42**
C0705-063-9000-M	**0.705**	**17.91**	**0.063**	**1.60**	**9.000**	**228.60**	**3.220**	**81.78**	**2.310**	**58.67**	**15.03**	**66.85**	**2.60**	**0.46**	**C0705-063-9000-S**	**3.726**	**94.65**	**11.92**	**53.04**	**2.26**	**0.40**
C0705-063-9500-M	**0.705**	**17.91**	**0.063**	**1.60**	**9.500**	**241.30**	**3.394**	**86.21**	**2.432**	**61.78**	**15.03**	**66.85**	**2.46**	**0.43**	**C0705-063-9500-S**	**3.929**	**99.80**	**11.92**	**53.04**	**2.14**	**0.37**
C0705-068-1250-M	**0.705**	**17.91**	**0.068**	**1.73**	**1.250**	**31.75**	**0.559**	**14.19**	**0.459**	**11.65**	**18.58**	**82.66**	**26.88**	**4.70**	**C0705-068-1250-S**	**0.621**	**15.76**	**14.71**	**65.45**	**23.38**	**4.09**
C0705-068-1375-M	**0.705**	**17.91**	**0.068**	**1.73**	**1.375**	**34.93**	**0.606**	**15.40**	**0.494**	**12.55**	**18.58**	**82.66**	**24.17**	**4.23**	**C0705-068-1375-S**	**0.675**	**17.14**	**14.71**	**65.45**	**21.02**	**3.68**
C0705-068-1500-M	**0.705**	**17.91**	**0.068**	**1.73**	**1.500**	**38.10**	**0.654**	**16.60**	**0.529**	**13.45**	**18.58**	**82.66**	**21.96**	**3.84**	**C0705-068-1500-S**	**0.729**	**18.52**	**14.71**	**65.45**	**19.09**	**3.34**
C0705-068-1625-M	**0.705**	**17.91**	**0.068**	**1.73**	**1.625**	**41.28**	**0.701**	**17.81**	**0.565**	**14.35**	**18.58**	**82.66**	**20.11**	**3.52**	**C0705-068-1625-S**	**0.784**	**19.91**	**14.71**	**65.45**	**17.49**	**3.06**
C0705-068-1750-M	**0.705**	**17.91**	**0.068**	**1.73**	**1.750**	**44.45**	**0.749**	**19.01**	**0.600**	**15.25**	**18.58**	**82.66**	**18.56**	**3.25**	**C0705-068-1750-S**	**0.838**	**21.29**	**14.71**	**65.45**	**16.14**	**2.82**
C0705-068-1875-M	**0.705**	**17.91**	**0.068**	**1.73**	**1.875**	**47.63**	**0.796**	**20.22**	**0.636**	**16.15**	**18.58**	**82.66**	**17.22**	**3.01**	**C0705-068-1875-S**	**0.892**	**22.67**	**14.71**	**65.45**	**14.98**	**2.62**
C0705-068-2000-M	**0.705**	**17.91**	**0.068**	**1.73**	**2.000**	**50.80**	**0.843**	**21.42**	**0.671**	**17.05**	**18.58**	**82.66**	**16.07**	**2.81**	**C0705-068-2000-S**	**0.947**	**24.05**	**14.71**	**65.45**	**13.97**	**2.44**
C0705-068-2125-M	**0.705**	**17.91**	**0.068**	**1.73**	**2.125**	**53.98**	**0.891**	**22.63**	**0.707**	**17.95**	**18.58**	**82.66**	**15.06**	**2.63**	**C0705-068-2125-S**	**1.001**	**25.43**	**14.71**	**65.45**	**13.09**	**2.29**
C0705-068-2250-M	**0.705**	**17.91**	**0.068**	**1.73**	**2.250**	**57.15**	**0.938**	**23.83**	**0.742**	**18.85**	**18.58**	**82.66**	**14.17**	**2.48**	**C0705-068-2250-S**	**1.056**	**26.81**	**14.71**	**65.45**	**12.32**	**2.16**
C0705-068-2375-M	**0.705**	**17.91**	**0.068**	**1.73**	**2.375**	**60.33**	**0.986**	**25.04**	**0.778**	**19.75**	**18.58**	**82.66**	**13.38**	**2.34**	**C0705-068-2375-S**	**1.110**	**28.19**	**14.71**	**65.45**	**11.63**	**2.04**
C0705-068-2500-M	**0.705**	**17.91**	**0.068**	**1.73**	**2.500**	**63.50**	**1.033**	**26.24**	**0.813**	**20.65**	**18.58**	**82.66**	**12.67**	**2.22**	**C0705-068-2500-S**	**1.164**	**29.57**	**14.71**	**65.45**	**11.02**	**1.93**
C0705-068-2625-M	**0.705**	**17.91**	**0.068**	**1.73**	**2.625**	**66.68**	**1.081**	**27.45**	**0.848**	**21.55**	**18.58**	**82.66**	**12.03**	**2.11**	**C0705-068-2625-S**	**1.219**	**30.95**	**14.71**	**65.45**	**10.46**	**1.83**
C0705-068-2750-M	**0.705**	**17.91**	**0.068**	**1.73**	**2.750**	**69.85**	**1.128**	**28.65**	**0.884**	**22.45**	**18.58**	**82.66**	**11.46**	**2.00**	**C0705-068-2750-S**	**1.273**	**32.34**	**14.71**	**65.45**	**9.96**	**1.74**
C0705-068-2875-M	**0.705**	**17.91**	**0.068**	**1.73**	**2.875**	**73.03**	**1.175**	**29.86**	**0.919**	**23.35**	**18.58**	**82.66**	**10.93**	**1.91**	**C0705-068-2875-S**	**1.327**	**33.72**	**14.71**	**65.45**	**9.51**	**1.66**
C0705-068-3000-M	**0.705**	**17.91**	**0.068**	**1.73**	**3.000**	**76.20**	**1.223**	**31.06**	**0.955**	**24.25**	**18.58**	**82.66**	**10.46**	**1.83**	**C0705-068-3000-S**	**1.382**	**35.10**	**14.71**	**65.45**	**9.09**	**1.59**
C0705-068-3250-M	**0.705**	**17.91**	**0.068**	**1.73**	**3.250**	**82.55**	**1.318**	**33.47**	**1.026**	**26.05**	**18.58**	**82.66**	**9.62**	**1.68**	**C0705-068-3250-S**	**1.491**	**37.86**	**14.71**	**65.45**	**8.36**	**1.46**
C0705-068-3500-M	**0.705**	**17.91**	**0.068**	**1.73**	**3.500**	**88.90**	**1.413**	**35.88**	**1.096**	**27.85**	**18.58**	**82.66**	**8.90**	**1.56**	**C0705-068-3500-S**	**1.599**	**40.62**	**14.71**	**65.45**	**7.74**	**1.35**
C0705-068-3750-M	**0.705**	**17.91**	**0.068**	**1.73**	**3.750**	**95.25**	**1.508**	**38.29**	**1.167**	**29.65**	**18.58**	**82.66**	**8.29**	**1.45**	**C0705-068-3750-S**	**1.708**	**43.38**	**14.71**	**65.45**	**7.21**	**1.26**
C0705-068-4000-M	**0.705**	**17.91**	**0.068**	**1.73**	**4.000**	**101.60**	**1.602**	**40.70**	**1.238**	**31.45**	**18.58**	**82.66**	**7.75**	**1.36**	**C0705-068-4000-S**	**1.817**	**46.15**	**14.71**	**65.45**	**6.74**	**1.18**
C0705-068-4250-M	**0.705**	**17.91**	**0.068**	**1.73**	**4.250**	**107.95**	**1.697**	**43.11**	**1.309**	**33.25**	**18.58**	**82.66**	**7.28**	**1.27**	**C0705-068-4250-S**	**1.926**	**48.91**	**14.71**	**65.45**	**6.33**	**1.11**
C0705-068-4500-M	**0.705**	**17.91**	**0.068**	**1.73**	**4.500**	**114.30**	**1.792**	**45.52**	**1.380**	**35.05**	**18.58**	**82.66**	**6.86**	**1.20**	**C0705-068-4500-S**	**2.034**	**51.67**	**14.71**	**65.45**	**5.97**	**1.04**
C0705-068-4750-M	**0.705**	**17.91**	**0.068**	**1.73**	**4.750**	**120.65**	**1.887**	**47.93**	**1.451**	**36.85**	**18.58**	**82.66**	**6.49**	**1.14**	**C0705-068-4750-S**	**2.143**	**54.43**	**14.71**	**65.45**	**5.64**	**0.99**
C0705-068-5000-M	**0.705**	**17.91**	**0.068**	**1.73**	**5.000**	**127.00**	**1.982**	**50.34**	**1.522**	**38.65**	**18.58**	**82.66**	**6.16**	**1.08**	**C0705-068-5000-S**	**2.252**	**57.20**	**14.71**	**65.45**	**5.35**	**0.94**
C0705-068-5250-M	**0.705**	**17.91**	**0.068**	**1.73**	**5.250**	**133.35**	**2.077**	**52.75**	**1.593**	**40.45**	**18.58**	**82.66**	**5.86**	**1.02**	**C0705-068-5250-S**	**2.361**	**59.96**	**14.71**	**65.45**	**5.09**	**0.89**
C0705-068-5500-M	**0.705**	**17.91**	**0.068**	**1.73**	**5.500**	**139.70**	**2.172**	**55.16**	**1.663**	**42.25**	**18.58**	**82.66**	**5.58**	**0.98**	**C0705-068-5500-S**	**2.469**	**62.72**	**14.71**	**65.45**	**4.86**	**0.85**
C0705-068-5750-M	**0.705**	**17.91**	**0.068**	**1.73**	**5.750**	**146.05**	**2.267**	**57.57**	**1.734**	**44.05**	**18.58**	**82.66**	**5.34**	**0.93**	**C0705-068-5750-S**	**2.578**	**65.48**	**14.71**	**65.45**	**4.64**	**0.81**
C0705-068-6000-M	**0.705**	**17.91**	**0.068**	**1.73**	**6.000**	**152.40**	**2.361**	**59.98**	**1.805**	**45.85**	**18.58**	**82.66**	**5.11**	**0.89**	**C0705-068-6000-S**	**2.687**	**68.24**	**14.71**	**65.45**	**4.44**	**0.78**
C0705-068-6250-M	**0.705**	**17.91**	**0.068**	**1.73**	**6.250**	**158.75**	**2.456**	**62.39**	**1.876**	**47.65**	**18.58**	**82.66**	**4.90**	**0.86**	**C0705-068-6250-S**	**2.796**	**71.01**	**14.71**	**65.45**	**4.26**	**0.75**

Part Numbers with an "*" are squared and not ground. **Part Numbers in bold** represent the newly expanded Associated Spring RAYMOND compression spring offering.

MUSIC WIRE															STAINLESS STEEL						
Catalog #	Outside Diameter (OD)		Wire Diameter (d)		Free Length (L) Approx		Load Length (L_1)		Solid Height (Sh) Approx		Load (P) at L_1		Spring Rate (R)		Catalog #	Load Length (L_1)		Load (P) at L_1		Spring Rate (R)	
	in	mm	in	mm	in	mm	in	mm	in	mm	lb	N	lb/in	N/mm		in	mm	lb	N	lb/in	N/mm
C0705-068-6500-M	0.705	17.91	0.068	1.73	6.500	165.10	2.551	64.80	1.947	49.45	18.58	82.66	4.71	0.82	**C0705-068-6500-S**	2.904	73.77	14.71	65.45	4.09	0.72
C0705-068-6750-M	0.705	17.91	0.068	1.73	6.750	171.45	2.646	67.21	2.018	51.25	18.58	82.66	4.53	0.79	**C0705-068-6750-S**	3.013	76.53	14.71	65.45	3.94	0.69
C0705-068-7000-M	0.705	17.91	0.068	1.73	7.000	177.80	2.741	69.62	2.089	53.05	18.58	82.66	4.36	0.76	**C0705-068-7000-S**	3.122	79.29	14.71	65.45	3.79	0.66
C0705-068-7500-M	0.705	17.91	0.068	1.73	7.500	190.50	2.931	74.44	2.230	56.65	18.58	82.66	4.07	0.71	**C0705-068-7500-S**	3.339	84.82	14.71	65.45	3.54	0.62
C0705-068-8000-M	0.705	17.91	0.068	1.73	8.000	203.20	3.120	79.26	2.372	60.25	18.58	82.66	3.81	0.67	**C0705-068-8000-S**	3.557	90.34	14.71	65.45	3.31	0.58
C0705-068-8500-M	0.705	17.91	0.068	1.73	8.500	215.90	3.310	84.08	2.514	63.86	18.58	82.66	3.58	0.63	**C0705-068-8500-S**	3.774	95.87	14.71	65.45	3.11	0.54
C0705-068-9000-M	0.705	17.91	0.068	1.73	9.000	228.60	3.500	88.90	2.656	67.46	18.58	82.66	3.38	0.59	**C0705-068-9000-S**	3.992	101.39	14.71	65.45	2.94	0.51
C0705-068-9500-M	0.705	17.91	0.068	1.73	9.500	241.30	3.690	93.72	2.797	71.06	18.58	82.66	3.20	0.56	**C0705-068-9500-S**	4.209	106.91	14.71	65.45	2.78	0.49
C0705-072-1125-M	0.705	17.91	0.072	1.83	1.125	28.58	0.541	13.74	0.460	11.68	21.78	96.86	37.29	6.53	**C0705-072-1125-S**	0.594	15.09	17.21	76.56	32.43	5.68
C0705-072-1250-M	0.705	17.91	0.072	1.83	1.250	31.75	0.592	15.03	0.499	12.68	21.78	96.86	33.08	5.79	**C0705-072-1250-S**	0.652	16.55	17.21	76.56	28.76	5.03
C0705-072-1375-M	0.705	17.91	0.072	1.83	1.375	34.93	0.642	16.31	0.539	13.68	21.78	96.86	29.72	5.20	**C0705-072-1375-S**	0.709	18.01	17.21	76.56	25.84	4.52
C0705-072-1500-M	0.705	17.91	0.072	1.83	1.500	38.10	0.693	17.60	0.578	14.68	21.78	96.86	26.98	4.72	**C0705-072-1500-S**	0.766	19.47	17.21	76.56	23.46	4.11
C0705-072-1625-M	0.705	17.91	0.072	1.83	1.625	41.28	0.743	18.88	0.617	15.68	21.78	96.86	24.70	4.32	**C0705-072-1625-S**	0.824	20.92	17.21	76.56	21.48	3.76
C0705-072-1750-M	0.705	17.91	0.072	1.83	1.750	44.45	0.794	20.17	0.657	16.68	21.78	96.86	22.78	3.99	**C0705-072-1750-S**	0.881	22.38	17.21	76.56	19.81	3.47
C0705-072-1875-M	0.705	17.91	0.072	1.83	1.875	47.63	0.845	21.46	0.696	17.68	21.78	96.86	21.14	3.70	**C0705-072-1875-S**	0.939	23.84	17.21	76.56	18.38	3.22
C0705-072-2000-M	0.705	17.91	0.072	1.83	2.000	50.80	0.895	22.74	0.735	18.68	21.78	96.86	19.71	3.45	**C0705-072-2000-S**	0.996	25.30	17.21	76.56	17.14	3.00
C0705-072-2125-M	0.705	17.91	0.072	1.83	2.125	53.98	0.946	24.03	0.775	19.68	21.78	96.86	18.47	3.23	**C0705-072-2125-S**	1.053	26.75	17.21	76.56	16.06	2.81
C0705-072-2250-M	0.705	17.91	0.072	1.83	2.250	57.15	0.996	25.31	0.814	20.68	21.78	96.86	17.37	3.04	**C0705-072-2250-S**	1.111	28.21	17.21	76.56	15.11	2.64
C0705-072-2375-M	0.705	17.91	0.072	1.83	2.375	60.33	1.047	26.60	0.853	21.68	21.78	96.86	16.40	2.87	**C0705-072-2375-S**	1.168	29.67	17.21	76.56	14.26	2.50
C0705-072-2500-M	0.705	17.91	0.072	1.83	2.500	63.50	1.098	27.88	0.893	22.68	21.78	96.86	15.53	2.72	**C0705-072-2500-S**	1.225	31.13	17.21	76.56	13.50	2.36
C0705-072-2625-M	0.705	17.91	0.072	1.83	2.625	66.68	1.148	29.17	0.932	23.67	21.78	96.86	14.75	2.58	**C0705-072-2625-S**	1.283	32.58	17.21	76.56	12.82	2.24
C0705-072-2750-M	0.705	17.91	0.072	1.83	2.750	69.85	1.199	30.45	0.971	24.67	21.78	96.86	14.04	2.46	**C0705-072-2750-S**	1.340	34.04	17.21	76.56	12.21	2.14
C0705-072-2875-M	0.705	17.91	0.072	1.83	2.875	73.03	1.249	31.74	1.011	25.67	21.78	96.86	13.40	2.34	**C0705-072-2875-S**	1.398	35.50	17.21	76.56	11.65	2.04
C0705-072-3000-M	0.705	17.91	0.072	1.83	3.000	76.20	1.300	33.02	1.050	26.67	21.78	96.86	12.81	2.24	**C0705-072-3000-S**	1.455	36.95	17.21	76.56	11.14	1.95
C0705-072-3250-M	0.705	17.91	0.072	1.83	3.250	82.55	1.401	35.59	1.129	28.67	21.78	96.86	11.78	2.06	**C0705-072-3250-S**	1.570	39.87	17.21	76.56	10.24	1.79
C0705-072-3500-M	0.705	17.91	0.072	1.83	3.500	88.90	1.502	38.16	1.207	30.67	21.78	96.86	10.90	1.91	**C0705-072-3500-S**	1.684	42.78	17.21	76.56	9.48	1.66
C0705-072-3750-M	0.705	17.91	0.072	1.83	3.750	95.25	1.604	40.73	1.286	32.67	21.78	96.86	10.15	1.78	**C0705-072-3750-S**	1.799	45.70	17.21	76.56	8.82	1.54
C0705-072-4000-M	0.705	17.91	0.072	1.83	4.000	101.60	1.705	43.30	1.365	34.67	21.78	96.86	9.49	1.66	**C0705-072-4000-S**	1.914	48.61	17.21	76.56	8.25	1.44
C0705-072-4250-M	0.705	17.91	0.072	1.83	4.250	107.95	1.806	45.87	1.444	36.67	21.78	96.86	8.91	1.56	**C0705-072-4250-S**	2.029	51.53	17.21	76.56	7.75	1.36
C0705-072-4500-M	0.705	17.91	0.072	1.83	4.500	114.30	1.907	48.44	1.522	38.66	21.78	96.86	8.40	1.47	**C0705-072-4500-S**	2.143	54.44	17.21	76.56	7.30	1.28
C0705-072-4750-M	0.705	17.91	0.072	1.83	4.750	120.65	2.008	51.01	1.601	40.66	21.78	96.86	7.94	1.39	**C0705-072-4750-S**	2.258	57.36	17.21	76.56	6.91	1.21
C0705-072-5000-M	0.705	17.91	0.072	1.83	5.000	127.00	2.110	53.59	1.680	42.66	21.78	96.86	7.53	1.32	**C0705-072-5000-S**	2.373	60.27	17.21	76.56	6.55	1.15
C0705-072-5250-M	0.705	17.91	0.072	1.83	5.250	133.35	2.211	56.16	1.758	44.66	21.78	96.86	7.17	1.25	**C0705-072-5250-S**	2.488	63.19	17.21	76.56	6.23	1.09
C0705-072-5500-M	0.705	17.91	0.072	1.83	5.500	139.70	2.312	58.73	1.837	46.66	21.78	96.86	6.83	1.20	**C0705-072-5500-S**	2.602	66.10	17.21	76.56	5.94	1.04
C0705-072-5750-M	0.705	17.91	0.072	1.83	5.750	146.05	2.413	61.30	1.916	48.66	21.78	96.86	6.53	1.14	**C0705-072-5750-S**	2.717	69.02	17.21	76.56	5.68	0.99
C0705-072-6000-M	0.705	17.91	0.072	1.83	6.000	152.40	2.514	63.87	1.994	50.66	21.78	96.86	6.25	1.09	**C0705-072-6000-S**	2.832	71.93	17.21	76.56	5.43	0.95
C0705-072-6250-M	0.705	17.91	0.072	1.83	6.250	158.75	2.616	66.44	2.073	52.65	21.78	96.86	5.99	1.05	**C0705-072-6250-S**	2.947	74.84	17.21	76.56	5.21	0.91
C0705-072-6500-M	0.705	17.91	0.072	1.83	6.500	165.10	2.717	69.01	2.152	54.65	21.78	96.86	5.76	1.01	**C0705-072-6500-S**	3.061	77.76	17.21	76.56	5.01	0.88
C0705-072-6750-M	0.705	17.91	0.072	1.83	6.750	171.45	2.818	71.58	2.230	56.65	21.78	96.86	5.54	0.97	**C0705-072-6750-S**	3.176	80.67	17.21	76.56	4.82	0.84
C0705-072-7000-M	0.705	17.91	0.072	1.83	7.000	177.80	2.919	74.15	2.309	58.65	21.78	96.86	5.34	0.93	**C0705-072-7000-S**	3.291	83.59	17.21	76.56	4.64	0.81
C0705-072-7500-M	0.705	17.91	0.072	1.83	7.500	190.50	3.122	79.29	2.466	62.65	21.78	96.86	4.97	0.87	**C0705-072-7500-S**	3.520	89.42	17.21	76.56	4.33	0.76
C0705-072-8000-M	0.705	17.91	0.072	1.83	8.000	203.20	3.324	84.43	2.624	66.64	21.78	96.86	4.66	0.81	**C0705-072-8000-S**	3.750	95.25	17.21	76.56	4.05	0.71
C0705-072-8500-M	0.705	17.91	0.072	1.83	8.500	215.90	3.526	89.57	2.781	70.64	21.78	96.86	4.38	0.77	**C0705-072-8500-S**	3.979	101.08	17.21	76.56	3.81	0.67
C0705-072-9000-M	0.705	17.91	0.072	1.83	9.000	228.60	3.729	94.71	2.939	74.64	21.78	96.86	4.13	0.72	**C0705-072-9000-S**	4.209	106.91	17.21	76.56	3.59	0.63
C0705-072-9500-M	0.705	17.91	0.072	1.83	9.500	241.30	3.931	99.85	3.096	78.64	21.78	96.86	3.91	0.68	**C0705-072-9500-S**	4.438	112.74	17.21	76.56	3.40	0.60
C0705-085-1125-M	0.705	17.91	0.085	2.16	1.125	28.58	0.636	16.16	0.577	14.66	34.45	153.22	70.46	12.33	**C0705-085-1125-S**	0.684	17.37	27.03	120.26	61.27	10.72
C0705-085-1250-M	0.705	17.91	0.085	2.16	1.250	31.75	0.697	17.71	0.630	15.99	34.45	153.22	62.30	10.90	**C0705-085-1250-S**	0.751	19.08	27.03	120.26	54.18	9.48
C0705-085-1375-M	0.705	17.91	0.085	2.16	1.375	34.93	0.758	19.26	0.682	17.32	34.45	153.22	55.84	9.77	**C0705-085-1375-S**	0.818	20.78	27.03	120.26	48.56	8.50
C0705-085-1500-M	0.705	17.91	0.085	2.16	1.500	38.10	0.819	20.81	0.734	18.64	34.45	153.22	50.59	8.85	**C0705-085-1500-S**	0.885	22.49	27.03	120.26	43.99	7.70
C0705-085-1625-M	0.705	17.91	0.085	2.16	1.625	41.28	0.880	22.36	0.786	19.97	34.45	153.22	46.25	8.09	**C0705-085-1625-S**	0.953	24.20	27.03	120.26	40.21	7.04
C0705-085-1750-M	0.705	17.91	0.085	2.16	1.750	44.45	0.941	23.91	0.838	21.29	34.45	153.22	42.59	7.45	**C0705-085-1750-S**	1.020	25.91	27.03	120.26	37.03	6.48
C0705-085-1875-M	0.705	17.91	0.085	2.16	1.875	47.63	1.002	25.46	0.891	22.62	34.45	153.22	39.47	6.91	**C0705-085-1875-S**	1.087	27.62	27.03	120.26	34.32	6.01
C0705-085-2000-M	0.705	17.91	0.085	2.16	2.000	50.80	1.063	27.00	0.943	23.95	34.45	153.22	36.77	6.43	**C0705-085-2000-S**	1.154	29.32	27.03	120.26	31.97	5.60
C0705-085-2125-M	0.705	17.91	0.085	2.16	2.125	53.98	1.124	28.55	0.995	25.27	34.45	153.22	34.42	6.02	**C0705-085-2125-S**	1.222	31.03	27.03	120.26	29.93	5.24
C0705-085-2250-M	0.705	17.91	0.085	2.16	2.250	57.15	1.185	30.10	1.047	26.60	34.45	153.22	32.35	5.66	**C0705-085-2250-S**	1.289	32.74	27.03	120.26	28.13	4.92
C0705-085-2375-M	0.705	17.91	0.085	2.16	2.375	60.33	1.246	31.65	1.099	27.92	34.45	153.22	30.52	5.34	**C0705-085-2375-S**	1.356	34.45	27.03	120.26	26.54	4.64
C0705-085-2500-M	0.705	17.91	0.085	2.16	2.500	63.50	1.307	33.20	1.152	29.25	34.45	153.22	28.88	5.05	**C0705-085-2500-S**	1.423	36.16	27.03	120.26	25.11	4.39
C0705-085-2625-M	0.705	17.91	0.085	2.16	2.625	66.68	1.368	34.75	1.204	30.58	34.45	153.22	27.41	4.80	**C0705-085-2625-S**	1.491	37.86	27.03	120.26	23.83	4.17
C0705-085-2750-M	0.705	17.91	0.085	2.16	2.750	69.85	1.429	36.30	1.256	31.90	34.45	153.22	26.08	4.56	**C0705-085-2750-S**	1.558	39.57	27.03	120.26	22.68	3.97
C0705-085-2875-M	0.705	17.91	0.085	2.16	2.875	73.03	1.490	37.85	1.308	33.23	34.45	153.22	24.88	4.35	**C0705-085-2875-S**	1.625	41.28	27.03	120.26	21.63	3.79
C0705-085-3000-M	0.705	17.91	0.085	2.16	3.000	76.20	1.551	39.40	1.360	34.55	34.45	153.22	23.78	4.16	**C0705-085-3000-S**	1.692	42.99	27.03	120.26	20.68	3.62
C0705-085-3250-M	0.705	17.91	0.085	2.16	3.250	82.55	1.673	42.50	1.465	37.21	34.45	153.22	21.85	3.82	**C0705-085-3250-S**	1.827	46.40	27.03	120.26	19.00	3.32
C0705-085-3500-M	0.705	17.91	0.085	2.16	3.500	88.90	1.795	45.60	1.569	39.86	34.45	153.22	20.21	3.54	**C0705-085-3500-S**	1.961	49.82	27.03	120.26	17.57	3.07
C0705-085-3750-M	0.705	17.91	0.085	2.16	3.750	95.25	1.917	48.70	1.674	42.51	34.45	153.22	18.80	3.29	**C0705-085-3750-S**	2.096	53.24	27.03	120.26	16.34	2.86

FOR INFORMATION ON ALTERNATIVE FINISHES, SEE PAGE 311

Part Numbers with an "*" are squared and not ground. **Part Numbers in bold** represent the newly expanded Associated Spring RAYMOND compression spring offering.

MUSIC WIRE															STAINLESS STEEL						
Catalog #	Outside Diameter (OD)		Wire Diameter (d)		Free Length (L) Approx		Load Length (L_1)		Solid Height (Sh) Approx		Load (P) at L_1		Spring Rate (R)		Catalog #	Load Length (L_1)		Load (P) at L_1		Spring Rate (R)	
	in	mm	in	mm	in	mm	in	mm	in	mm	lb	N	lb/in	N/mm		in	mm	lb	N	lb/in	N/mm
C0705-085-4000-M	0.705	17.91	0.085	2.16	4.000	101.60	2.039	51.80	1.778	45.16	34.45	153.22	17.57	3.07	**C0705-085-4000-S**	2.230	56.65	27.03	120.26	15.28	2.67
C0705-085-4250-M	0.705	17.91	0.085	2.16	4.250	107.95	2.161	54.90	1.882	47.81	34.45	153.22	16.49	2.89	**C0705-085-4250-S**	2.365	60.07	27.03	120.26	14.34	2.51
C0705-085-4500-M	0.705	17.91	0.085	2.16	4.500	114.30	2.283	58.00	1.987	50.46	34.45	153.22	15.54	2.72	**C0705-085-4500-S**	2.499	63.48	27.03	120.26	13.51	2.36
C0705-085-4750-M	0.705	17.91	0.085	2.16	4.750	120.65	2.405	61.10	2.091	53.12	34.45	153.22	14.69	2.57	**C0705-085-4750-S**	2.634	66.90	27.03	120.26	12.78	2.24
C0705-085-5000-M	0.705	17.91	0.085	2.16	5.000	127.00	2.527	64.20	2.196	55.77	34.45	153.22	13.93	2.44	**C0705-085-5000-S**	2.768	70.32	27.03	120.26	12.11	2.12
C0705-085-5250-M	0.705	17.91	0.085	2.16	5.250	133.35	2.649	67.30	2.300	58.42	34.45	153.22	13.25	2.32	**C0705-085-5250-S**	2.903	73.73	27.03	120.26	11.52	2.02
C0705-085-5500-M	0.705	17.91	0.085	2.16	5.500	139.70	2.771	70.39	2.404	61.07	34.45	153.22	12.62	2.21	**C0705-085-5500-S**	3.037	77.15	27.03	120.26	10.98	1.92
C0705-085-5750-M	0.705	17.91	0.085	2.16	5.750	146.05	2.893	73.49	2.509	63.72	34.45	153.22	12.06	2.11	**C0705-085-5750-S**	3.172	80.56	27.03	120.26	10.49	1.84
C0705-085-6000-M	0.705	17.91	0.085	2.16	6.000	152.40	3.015	76.59	2.613	66.38	34.45	153.22	11.54	2.02	**C0705-085-6000-S**	3.306	83.98	27.03	120.26	10.04	1.76
C0705-085-6250-M	0.705	17.91	0.085	2.16	6.250	158.75	3.137	79.69	2.718	69.03	34.45	153.22	11.07	1.94	**C0705-085-6250-S**	3.441	87.40	27.03	120.26	9.62	1.68
C0705-085-6500-M	0.705	17.91	0.085	2.16	6.500	165.10	3.260	82.79	2.822	71.68	34.45	153.22	10.63	1.86	**C0705-085-6500-S**	3.575	90.81	27.03	120.26	9.24	1.62
C0705-085-6750-M	0.705	17.91	0.085	2.16	6.750	171.45	3.382	85.89	2.926	74.33	34.45	153.22	10.23	1.79	**C0705-085-6750-S**	3.710	94.23	27.03	120.26	8.89	1.56
C0705-085-7000-M	0.705	17.91	0.085	2.16	7.000	177.80	3.504	88.99	3.031	76.98	34.45	153.22	9.85	1.72	**C0705-085-7000-S**	3.844	97.64	27.03	120.26	8.57	1.50
C0705-085-7500-M	0.705	17.91	0.085	2.16	7.500	190.50	3.748	95.19	3.240	82.29	34.45	153.22	9.18	1.61	**C0705-085-7500-S**	4.113	104.48	27.03	120.26	7.98	1.40
C0705-085-8000-M	0.705	17.91	0.085	2.16	8.000	203.20	3.992	101.39	3.448	87.59	34.45	153.22	8.59	1.50	**C0705-085-8000-S**	4.382	111.31	27.03	120.26	7.47	1.31
C0705-085-8500-M	0.705	17.91	0.085	2.16	8.500	215.90	4.236	107.59	3.657	92.90	34.45	153.22	8.08	1.41	**C0705-085-8500-S**	4.651	118.14	27.03	120.26	7.02	1.23
C0705-085-9000-M	0.705	17.91	0.085	2.16	9.000	228.60	4.480	113.78	3.866	98.20	34.45	153.22	7.62	1.33	**C0705-085-9000-S**	4.920	124.97	27.03	120.26	6.63	1.16
C0705-085-9500-M	0.705	17.91	0.085	2.16	9.500	241.30	4.724	119.98	4.075	103.50	34.45	153.22	7.21	1.26	**C0705-085-9500-S**	5.189	131.80	27.03	120.26	6.27	1.10
C0705-092-1125-M	0.705	17.91	0.092	2.34	1.125	28.58	0.685	17.39	0.637	16.19	42.82	190.45	97.24	17.02	**C0705-092-1125-S**	0.729	18.52	33.46	148.83	84.56	14.80
C0705-092-1250-M	0.705	17.91	0.092	2.34	1.250	31.75	0.751	19.08	0.696	17.69	42.82	190.45	85.84	15.02	**C0705-092-1250-S**	0.802	20.36	33.46	148.83	74.64	13.06
C0705-092-1375-M	0.705	17.91	0.092	2.34	1.375	34.93	0.818	20.77	0.755	19.19	42.82	190.45	76.83	13.44	**C0705-092-1375-S**	0.874	22.20	33.46	148.83	66.81	11.69
C0705-092-1500-M	0.705	17.91	0.092	2.34	1.500	38.10	0.884	22.46	0.814	20.68	42.82	190.45	69.53	12.17	**C0705-092-1500-S**	0.947	24.04	33.46	148.83	60.46	10.58
C0705-092-1625-M	0.705	17.91	0.092	2.34	1.625	41.28	0.951	24.15	0.873	22.18	42.82	190.45	63.50	11.11	**C0705-092-1625-S**	1.019	25.88	33.46	148.83	55.22	9.66
C0705-092-1750-M	0.705	17.91	0.092	2.34	1.750	44.45	1.017	25.84	0.932	23.68	42.82	190.45	58.43	10.23	**C0705-092-1750-S**	1.091	27.72	33.46	148.83	50.81	8.89
C0705-092-1875-M	0.705	17.91	0.092	2.34	1.875	47.63	1.084	27.53	0.991	25.18	42.82	190.45	54.11	9.47	**C0705-092-1875-S**	1.164	29.56	33.46	148.83	47.05	8.23
C0705-092-2000-M	0.705	17.91	0.092	2.34	2.000	50.80	1.150	29.22	1.050	26.68	42.82	190.45	50.39	8.82	**C0705-092-2000-S**	1.236	31.40	33.46	148.83	43.82	7.67
C0705-092-2125-M	0.705	17.91	0.092	2.34	2.125	53.98	1.217	30.91	1.109	28.18	42.82	190.45	47.14	8.25	**C0705-092-2125-S**	1.309	33.24	33.46	148.83	40.99	7.17
C0705-092-2250-M	0.705	17.91	0.092	2.34	2.250	57.15	1.283	32.60	1.168	29.68	42.82	190.45	44.29	7.75	**C0705-092-2250-S**	1.381	35.08	33.46	148.83	38.51	6.74
C0705-092-2375-M	0.705	17.91	0.092	2.34	2.375	60.33	1.350	34.28	1.227	31.17	42.82	190.45	41.76	7.31	**C0705-092-2375-S**	1.454	36.92	33.46	148.83	36.32	6.36
C0705-092-2500-M	0.705	17.91	0.092	2.34	2.500	63.50	1.416	35.97	1.286	32.67	42.82	190.45	39.51	6.91	**C0705-092-2500-S**	1.526	38.76	33.46	148.83	34.36	6.01
C0705-092-2625-M	0.705	17.91	0.092	2.34	2.625	66.68	1.483	37.66	1.345	34.17	42.82	190.45	37.49	6.56	**C0705-092-2625-S**	1.599	40.60	33.46	148.83	32.60	5.70
C0705-092-2750-M	0.705	17.91	0.092	2.34	2.750	69.85	1.549	39.35	1.404	35.67	42.82	190.45	35.66	6.24	**C0705-092-2750-S**	1.671	42.44	33.46	148.83	31.01	5.43
C0705-092-2875-M	0.705	17.91	0.092	2.34	2.875	73.03	1.616	41.04	1.463	37.17	42.82	190.45	34.00	5.95	**C0705-092-2875-S**	1.743	44.28	33.46	148.83	29.57	5.17
C0705-092-3000-M	0.705	17.91	0.092	2.34	3.000	76.20	1.682	42.73	1.522	38.67	42.82	190.45	32.49	5.69	**C0705-092-3000-S**	1.816	46.12	33.46	148.83	28.26	4.94
C0705-092-3250-M	0.705	17.91	0.092	2.34	3.250	82.55	1.815	46.11	1.640	41.66	42.82	190.45	29.84	5.22	**C0705-092-3250-S**	1.961	49.80	33.46	148.83	25.95	4.54
C0705-092-3500-M	0.705	17.91	0.092	2.34	3.500	88.90	1.948	49.49	1.758	44.66	42.82	190.45	27.59	4.83	**C0705-092-3500-S**	2.106	53.48	33.46	148.83	24.00	4.20
C0705-092-3750-M	0.705	17.91	0.092	2.34	3.750	95.25	2.081	52.87	1.876	47.66	42.82	190.45	25.66	4.49	**C0705-092-3750-S**	2.250	57.16	33.46	148.83	22.31	3.90
C0705-092-4000-M	0.705	17.91	0.092	2.34	4.000	101.60	2.214	56.25	1.994	50.65	42.82	190.45	23.98	4.20	**C0705-092-4000-S**	2.395	60.84	33.46	148.83	20.85	3.65
C0705-092-4250-M	0.705	17.91	0.092	2.34	4.250	107.95	2.347	59.62	2.112	53.65	42.82	190.45	22.50	3.94	**C0705-092-4250-S**	2.540	64.52	33.46	148.83	19.57	3.42
C0705-092-4500-M	0.705	17.91	0.092	2.34	4.500	114.30	2.480	63.00	2.230	56.65	42.82	190.45	21.20	3.71	**C0705-092-4500-S**	2.685	68.20	33.46	148.83	18.44	3.23
C0705-092-4750-M	0.705	17.91	0.092	2.34	4.750	120.65	2.613	66.38	2.348	59.65	42.82	190.45	20.04	3.51	**C0705-092-4750-S**	2.830	71.88	33.46	148.83	17.43	3.05
C0705-092-5000-M	0.705	17.91	0.092	2.34	5.000	127.00	2.746	69.76	2.466	62.64	42.82	190.45	19.00	3.33	**C0705-092-5000-S**	2.975	75.56	33.46	148.83	16.52	2.89
C0705-092-5250-M	0.705	17.91	0.092	2.34	5.250	133.35	2.880	73.14	2.584	65.64	42.82	190.45	18.06	3.16	**C0705-092-5250-S**	3.120	79.24	33.46	148.83	15.71	2.75
C0705-092-5500-M	0.705	17.91	0.092	2.34	5.500	139.70	3.013	76.52	2.702	68.64	42.82	190.45	17.21	3.01	**C0705-092-5500-S**	3.265	82.92	33.46	148.83	14.97	2.62
C0705-092-5750-M	0.705	17.91	0.092	2.34	5.750	146.05	3.146	79.90	2.820	71.63	42.82	190.45	16.44	2.88	**C0705-092-5750-S**	3.409	86.60	33.46	148.83	14.30	2.50
C0705-092-6000-M	0.705	17.91	0.092	2.34	6.000	152.40	3.279	83.28	2.938	74.63	42.82	190.45	15.73	2.75	**C0705-092-6000-S**	3.554	90.28	33.46	148.83	13.68	2.39
C0705-092-6250-M	0.705	17.91	0.092	2.34	6.250	158.75	3.412	86.65	3.056	77.63	42.82	190.45	15.08	2.64	**C0705-092-6250-S**	3.699	93.96	33.46	148.83	13.12	2.30
C0705-092-6500-M	0.705	17.91	0.092	2.34	6.500	165.10	3.545	90.03	3.174	80.63	42.82	190.45	14.49	2.54	**C0705-092-6500-S**	3.844	97.64	33.46	148.83	12.60	2.20
C0705-092-6750-M	0.705	17.91	0.092	2.34	6.750	171.45	3.678	93.41	3.292	83.62	42.82	190.45	13.94	2.44	**C0705-092-6750-S**	3.989	101.32	33.46	148.83	12.12	2.12
C0705-092-7000-M	0.705	17.91	0.092	2.34	7.000	177.80	3.811	96.79	3.410	86.62	42.82	190.45	13.43	2.35	**C0705-092-7000-S**	4.134	105.00	33.46	148.83	11.67	2.04
C0705-092-7500-M	0.705	17.91	0.092	2.34	7.500	190.50	4.077	103.55	3.646	92.61	42.82	190.45	12.51	2.19	**C0705-092-7500-S**	4.424	112.36	33.46	148.83	10.88	1.90
C0705-092-8000-M	0.705	17.91	0.092	2.34	8.000	203.20	4.343	110.31	3.882	98.61	42.82	190.45	11.71	2.05	**C0705-092-8000-S**	4.713	119.72	33.46	148.83	10.18	1.78
C0705-092-8500-M	0.705	17.91	0.092	2.34	8.500	215.90	4.609	117.06	4.118	104.60	42.82	190.45	11.00	1.93	**C0705-092-8500-S**	5.003	127.08	33.46	148.83	9.57	1.67
C0705-092-9000-M	0.705	17.91	0.092	2.34	9.000	228.60	4.875	123.82	4.354	110.60	42.82	190.45	10.38	1.82	**C0705-092-9000-S**	5.293	134.44	33.46	148.83	9.03	1.58
C0705-092-9500-M	0.705	17.91	0.092	2.34	9.500	241.30	5.141	130.58	4.590	116.59	42.82	190.45	9.82	1.72	**C0705-092-9500-S**	5.583	141.80	33.46	148.83	8.54	1.49
C0705-098-1000-M	0.705	17.91	0.098	2.49	1.000	25.40	0.653	16.59	0.622	15.79	50.90	226.43	146.75	25.68	**C0705-098-1000-S**	0.689	17.51	39.62	176.26	127.61	22.33
C0705-098-1125-M	0.705	17.91	0.098	2.49	1.125	28.58	0.724	18.39	0.686	17.43	50.90	226.43	127.00	22.23	**C0705-098-1125-S**	0.766	19.46	39.62	176.26	110.44	19.33
C0705-098-1250-M	0.705	17.91	0.098	2.49	1.250	31.75	0.795	20.20	0.751	19.07	50.90	226.43	111.94	19.59	**C0705-098-1250-S**	0.843	21.41	39.62	176.26	97.34	17.03
C0705-098-1375-M	0.705	17.91	0.098	2.49	1.375	34.93	0.866	22.00	0.815	20.71	50.90	226.43	100.07	17.51	**C0705-098-1375-S**	0.920	23.36	39.62	176.26	87.02	15.23
C0705-098-1500-M	0.705	17.91	0.098	2.49	1.500	38.10	0.937	23.81	0.880	22.35	50.90	226.43	90.48	15.83	**C0705-098-1500-S**	0.996	25.31	39.62	176.26	78.68	13.77
C0705-098-1625-M	0.705	17.91	0.098	2.49	1.625	41.28	1.008	25.62	0.945	23.99	50.90	226.43	82.57	14.45	**C0705-098-1625-S**	1.073	27.26	39.62	176.26	71.80	12.56
C0705-098-1750-M	0.705	17.91	0.098	2.49	1.750	44.45	1.080	27.42	1.009	25.64	50.90	226.43	75.92	13.29	**C0705-098-1750-S**	1.150	29.21	39.62	176.26	66.02	11.55
C0705-098-1875-M	0.705	17.91	0.098	2.49	1.875	47.63	1.151	29.23	1.074	27.28	50.90	226.43	70.27	12.30	**C0705-098-1875-S**	1.227	31.15	39.62	176.26	61.11	10.69
C0705-098-2000-M	0.705	17.91	0.098	2.49	2.000	50.80	1.222	31.03	1.139	28.92	50.90	226.43	65.40	11.45	**C0705-098-2000-S**	1.303	33.10	39.62	176.26	56.87	9.95

Part Numbers with an "*" are squared and not ground. **Part Numbers in bold** represent the newly expanded Associated Spring RAYMOND compression spring offering.

MUSIC WIRE															STAINLESS STEEL						
Catalog #	Outside Diameter (OD)		Wire Diameter (d)		Free Length (L) Approx		Load Length (L_1)		Solid Height (Sh) Approx		Load (P) at L_1		Spring Rate (R)		Catalog #	Load Length (L_1)		Load (P) at L_1		Spring Rate (R)	
	in	mm	in	mm	in	mm	in	mm	in	mm	lb	N	lb/in	N/mm		in	mm	lb	N	lb/in	N/mm
C0705-098-2125-M	0.705	17.91	0.098	2.49	2.125	53.98	1.293	32.84	1.203	30.56	50.90	226.43	61.16	10.70	**C0705-098-2125-S**	1.380	35.05	39.62	176.26	53.19	9.31
C0705-098-2250-M	0.705	17.91	0.098	2.49	2.250	57.15	1.364	34.64	1.268	32.20	50.90	226.43	57.44	10.05	**C0705-098-2250-S**	1.457	37.00	39.62	176.26	49.95	8.74
C0705-098-2375-M	0.705	17.91	0.098	2.49	2.375	60.33	1.435	36.45	1.332	33.84	50.90	226.43	54.15	9.48	**C0705-098-2375-S**	1.533	38.95	39.62	176.26	47.08	8.24
C0705-098-2500-M	0.705	17.91	0.098	2.49	2.500	63.50	1.506	38.25	1.397	35.49	50.90	226.43	51.21	8.96	**C0705-098-2500-S**	1.610	40.90	39.62	176.26	44.53	7.79
C0705-098-2625-M	0.705	17.91	0.098	2.49	2.625	66.68	1.577	40.06	1.462	37.13	50.90	226.43	48.57	8.50	**C0705-098-2625-S**	1.687	42.85	39.62	176.26	42.24	7.39
C0705-098-2750-M	0.705	17.91	0.098	2.49	2.750	69.85	1.648	41.86	1.526	38.77	50.90	226.43	46.20	8.08	**C0705-098-2750-S**	1.764	44.80	39.62	176.26	40.17	7.03
C0705-098-2875-M	0.705	17.91	0.098	2.49	2.875	73.03	1.719	43.67	1.591	40.41	50.90	226.43	44.04	7.71	**C0705-098-2875-S**	1.840	46.74	39.62	176.26	38.30	6.70
C0705-098-3000-M	0.705	17.91	0.098	2.49	3.000	76.20	1.790	45.47	1.656	42.05	50.90	226.43	42.08	7.36	**C0705-098-3000-S**	1.917	48.69	39.62	176.26	36.59	6.40
C0705-098-3250-M	0.705	17.91	0.098	2.49	3.250	82.55	1.932	49.08	1.785	45.34	50.90	226.43	38.63	6.76	**C0705-098-3250-S**	2.071	52.59	39.62	176.26	33.59	5.88
C0705-098-3500-M	0.705	17.91	0.098	2.49	3.500	88.90	2.075	52.69	1.914	48.62	50.90	226.43	35.71	6.25	**C0705-098-3500-S**	2.224	56.49	39.62	176.26	31.05	5.43
C0705-098-3750-M	0.705	17.91	0.098	2.49	3.750	95.25	2.217	56.30	2.043	51.90	50.90	226.43	33.20	5.81	**C0705-098-3750-S**	2.377	60.39	39.62	176.26	28.87	5.05
C0705-098-4000-M	0.705	17.91	0.098	2.49	4.000	101.60	2.359	59.91	2.173	55.19	50.90	226.43	31.02	5.43	**C0705-098-4000-S**	2.531	64.28	39.62	176.26	26.97	4.72
C0705-098-4250-M	0.705	17.91	0.098	2.49	4.250	107.95	2.501	63.52	2.302	58.47	50.90	226.43	29.10	5.09	**C0705-098-4250-S**	2.684	68.18	39.62	176.26	25.31	4.43
C0705-098-4500-M	0.705	17.91	0.098	2.49	4.500	114.30	2.643	67.13	2.431	61.75	50.90	226.43	27.41	4.80	**C0705-098-4500-S**	2.838	72.08	39.62	176.26	23.84	4.17
C0705-098-4750-M	0.705	17.91	0.098	2.49	4.750	120.65	2.785	70.74	2.560	65.04	50.90	226.43	25.91	4.53	**C0705-098-4750-S**	2.991	75.98	39.62	176.26	22.53	3.94
C0705-098-5000-M	0.705	17.91	0.098	2.49	5.000	127.00	2.927	74.36	2.690	68.32	50.90	226.43	24.56	4.30	**C0705-098-5000-S**	3.145	79.87	39.62	176.26	21.36	3.74
C0705-098-5250-M	0.705	17.91	0.098	2.49	5.250	133.35	3.070	77.97	2.819	71.60	50.90	226.43	23.35	4.09	**C0705-098-5250-S**	3.298	83.77	39.62	176.26	20.30	3.55
C0705-098-5500-M	0.705	17.91	0.098	2.49	5.500	139.70	3.212	81.58	2.948	74.88	50.90	226.43	22.25	3.89	**C0705-098-5500-S**	3.452	87.67	39.62	176.26	19.34	3.39
C0705-098-5750-M	0.705	17.91	0.098	2.49	5.750	146.05	3.354	85.19	3.077	78.17	50.90	226.43	21.24	3.72	**C0705-098-5750-S**	3.605	91.57	39.62	176.26	18.47	3.23
C0705-098-6000-M	0.705	17.91	0.098	2.49	6.000	152.40	3.496	88.80	3.207	81.45	50.90	226.43	20.33	3.56	**C0705-098-6000-S**	3.758	95.46	39.62	176.26	17.68	3.09
C0705-098-6250-M	0.705	17.91	0.098	2.49	6.250	158.75	3.638	92.41	3.336	84.73	50.90	226.43	19.49	3.41	**C0705-098-6250-S**	3.912	99.36	39.62	176.26	16.95	2.97
C0705-098-6500-M	0.705	17.91	0.098	2.49	6.500	165.10	3.780	96.02	3.465	88.02	50.90	226.43	18.72	3.28	**C0705-098-6500-S**	4.065	103.26	39.62	176.26	16.28	2.85
C0705-098-6750-M	0.705	17.91	0.098	2.49	6.750	171.45	3.922	99.63	3.595	91.30	50.90	226.43	18.00	3.15	**C0705-098-6750-S**	4.219	107.16	39.62	176.26	15.65	2.74
C0705-098-7000-M	0.705	17.91	0.098	2.49	7.000	177.80	4.064	103.24	3.724	94.58	50.90	226.43	17.34	3.03	**C0705-098-7000-S**	4.372	111.05	39.62	176.26	15.08	2.64
C0705-098-7500-M	0.705	17.91	0.098	2.49	7.500	190.50	4.349	110.46	3.982	101.15	50.90	226.43	16.15	2.83	**C0705-098-7500-S**	4.679	118.85	39.62	176.26	14.05	2.46
C0705-098-8000-M	0.705	17.91	0.098	2.49	8.000	203.20	4.633	117.68	4.241	107.72	50.90	226.43	15.12	2.65	**C0705-098-8000-S**	4.986	126.64	39.62	176.26	13.15	2.30
C0705-098-8500-M	0.705	17.91	0.098	2.49	8.500	215.90	4.917	124.90	4.499	114.28	50.90	226.43	14.21	2.49	**C0705-098-8500-S**	5.293	134.44	39.62	176.26	12.36	2.16
C0705-098-9000-M	0.705	17.91	0.098	2.49	9.000	228.60	5.202	132.12	4.758	120.85	50.90	226.43	13.40	2.35	**C0705-098-9000-S**	5.600	142.23	39.62	176.26	11.65	2.04
C0705-098-9500-M	0.705	17.91	0.098	2.49	9.500	241.30	5.486	139.34	5.016	127.42	50.90	226.43	12.68	2.22	**C0705-098-9500-S**	5.907	150.03	39.62	176.26	11.03	1.93
C0705-105-1000-M	0.705	17.91	0.105	2.67	1.000	25.40	0.691	17.56	0.669	16.98	61.45	273.32	199.02	34.83	**C0705-105-1000-S**	0.725	18.41	47.60	211.75	173.06	30.29
C0705-105-1125-M	0.705	17.91	0.105	2.67	1.125	28.58	0.767	19.49	0.740	18.78	61.45	273.32	171.83	30.07	**C0705-105-1125-S**	0.806	20.48	47.60	211.75	149.42	26.15
C0705-105-1250-M	0.705	17.91	0.105	2.67	1.250	31.75	0.844	21.43	0.810	20.58	61.45	273.32	151.18	26.46	**C0705-105-1250-S**	0.888	22.55	47.60	211.75	131.46	23.01
C0705-105-1375-M	0.705	17.91	0.105	2.67	1.375	34.93	0.920	23.36	0.881	22.39	61.45	273.32	134.96	23.62	**C0705-105-1375-S**	0.969	24.62	47.60	211.75	117.36	20.54
C0705-105-1500-M	0.705	17.91	0.105	2.67	1.500	38.10	0.996	25.29	0.952	24.19	61.45	273.32	121.88	21.33	**C0705-105-1500-S**	1.051	26.69	47.60	211.75	105.98	18.55
C0705-105-1625-M	0.705	17.91	0.105	2.67	1.625	41.28	1.072	27.23	1.023	25.99	61.45	273.32	111.11	19.44	**C0705-105-1625-S**	1.132	28.76	47.60	211.75	96.62	16.91
C0705-105-1750-M	0.705	17.91	0.105	2.67	1.750	44.45	1.148	29.16	1.094	27.79	61.45	273.32	102.10	17.87	**C0705-105-1750-S**	1.214	30.83	47.60	211.75	88.78	15.54
C0705-105-1875-M	0.705	17.91	0.105	2.67	1.875	47.63	1.224	31.10	1.165	29.59	61.45	273.32	94.43	16.53	**C0705-105-1875-S**	1.295	32.90	47.60	211.75	82.11	14.37
C0705-105-2000-M	0.705	17.91	0.105	2.67	2.000	50.80	1.300	33.03	1.236	31.39	61.45	273.32	87.84	15.37	**C0705-105-2000-S**	1.377	34.97	47.60	211.75	76.38	13.37
C0705-105-2125-M	0.705	17.91	0.105	2.67	2.125	53.98	1.377	34.97	1.307	33.19	61.45	273.32	82.10	14.37	**C0705-105-2125-S**	1.458	37.04	47.60	211.75	71.39	12.49
C0705-105-2250-M	0.705	17.91	0.105	2.67	2.250	57.15	1.453	36.90	1.378	34.99	61.45	273.32	77.07	13.49	**C0705-105-2250-S**	1.540	39.11	47.60	211.75	67.02	11.73
C0705-105-2375-M	0.705	17.91	0.105	2.67	2.375	60.33	1.529	38.83	1.449	36.79	61.45	273.32	72.62	12.71	**C0705-105-2375-S**	1.621	41.18	47.60	211.75	63.15	11.05
C0705-105-2500-M	0.705	17.91	0.105	2.67	2.500	63.50	1.605	40.77	1.519	38.59	61.45	273.32	68.66	12.02	**C0705-105-2500-S**	1.703	43.25	47.60	211.75	59.70	10.45
C0705-105-2625-M	0.705	17.91	0.105	2.67	2.625	66.68	1.681	42.70	1.590	40.40	61.45	273.32	65.10	11.39	**C0705-105-2625-S**	1.784	45.32	47.60	211.75	56.61	9.91
C0705-105-2750-M	0.705	17.91	0.105	2.67	2.750	69.85	1.757	44.64	1.661	42.20	61.45	273.32	61.90	10.83	**C0705-105-2750-S**	1.866	47.39	47.60	211.75	53.83	9.42
C0705-105-2875-M	0.705	17.91	0.105	2.67	2.875	73.03	1.833	46.57	1.732	44.00	61.45	273.32	59.00	10.32	**C0705-105-2875-S**	1.947	49.46	47.60	211.75	51.30	8.98
C0705-105-3000-M	0.705	17.91	0.105	2.67	3.000	76.20	1.910	48.50	1.803	45.80	61.45	273.32	56.35	9.86	**C0705-105-3000-S**	2.029	51.53	47.60	211.75	49.00	8.58
C0705-105-3250-M	0.705	17.91	0.105	2.67	3.250	82.55	2.062	52.37	1.945	49.40	61.45	273.32	51.72	9.05	**C0705-105-3250-S**	2.192	55.66	47.60	211.75	44.97	7.87
C0705-105-3500-M	0.705	17.91	0.105	2.67	3.500	88.90	2.214	56.24	2.087	53.00	61.45	273.32	47.79	8.36	**C0705-105-3500-S**	2.354	59.80	47.60	211.75	41.56	7.27
C0705-105-3750-M	0.705	17.91	0.105	2.67	3.750	95.25	2.367	60.11	2.229	56.60	61.45	273.32	44.41	7.77	**C0705-105-3750-S**	2.517	63.94	47.60	211.75	38.62	6.76
C0705-105-4000-M	0.705	17.91	0.105	2.67	4.000	101.60	2.519	63.98	2.370	60.21	61.45	273.32	41.49	7.26	**C0705-105-4000-S**	2.680	68.08	47.60	211.75	36.07	6.31
C0705-105-4250-M	0.705	17.91	0.105	2.67	4.250	107.95	2.671	67.85	2.512	63.81	61.45	273.32	38.92	6.81	**C0705-105-4250-S**	2.843	72.22	47.60	211.75	33.84	5.92
C0705-105-4500-M	0.705	17.91	0.105	2.67	4.500	114.30	2.823	71.72	2.654	67.41	61.45	273.32	36.65	6.41	**C0705-105-4500-S**	3.006	76.36	47.60	211.75	31.87	5.58
C0705-105-4750-M	0.705	17.91	0.105	2.67	4.750	120.65	2.976	75.58	2.796	71.01	61.45	273.32	34.63	6.06	**C0705-105-4750-S**	3.169	80.50	47.60	211.75	30.11	5.27
C0705-105-5000-M	0.705	17.91	0.105	2.67	5.000	127.00	3.128	79.45	2.938	74.61	61.45	273.32	32.82	5.74	**C0705-105-5000-S**	3.332	84.64	47.60	211.75	28.54	5.00
C0705-105-5250-M	0.705	17.91	0.105	2.67	5.250	133.35	3.280	83.32	3.079	78.22	61.45	273.32	31.20	5.46	**C0705-105-5250-S**	3.495	88.78	47.60	211.75	27.13	4.75
C0705-105-5500-M	0.705	17.91	0.105	2.67	5.500	139.70	3.433	87.19	3.221	81.82	61.45	273.32	29.72	5.20	**C0705-105-5500-S**	3.658	92.92	47.60	211.75	25.85	4.52
C0705-105-5750-M	0.705	17.91	0.105	2.67	5.750	146.05	3.585	91.06	3.363	85.42	61.45	273.32	28.38	4.97	**C0705-105-5750-S**	3.821	97.06	47.60	211.75	24.68	4.32
C0705-105-6000-M	0.705	17.91	0.105	2.67	6.000	152.40	3.737	94.93	3.505	89.02	61.45	273.32	27.16	4.75	**C0705-105-6000-S**	3.984	101.19	47.60	211.75	23.61	4.13
C0705-105-6250-M	0.705	17.91	0.105	2.67	6.250	158.75	3.890	98.79	3.647	92.62	61.45	273.32	26.03	4.56	**C0705-105-6250-S**	4.147	105.33	47.60	211.75	22.64	3.96
C0705-105-6500-M	0.705	17.91	0.105	2.67	6.500	165.10	4.042	102.66	3.788	96.23	61.45	273.32	25.00	4.37	**C0705-105-6500-S**	4.310	109.47	47.60	211.75	21.74	3.80
C0705-105-6750-M	0.705	17.91	0.105	2.67	6.750	171.45	4.194	106.53	3.930	99.83	61.45	273.32	24.04	4.21	**C0705-105-6750-S**	4.473	113.61	47.60	211.75	20.91	3.66
C0705-105-7000-M	0.705	17.91	0.105	2.67	7.000	177.80	4.346	110.40	4.072	103.43	61.45	273.32	23.16	4.05	**C0705-105-7000-S**	4.636	117.75	47.60	211.75	20.14	3.52
C0705-105-7500-M	0.705	17.91	0.105	2.67	7.500	190.50	4.651	118.14	4.356	110.63	61.45	273.32	21.57	3.77	**C0705-105-7500-S**	4.962	126.03	47.60	211.75	18.75	3.28
C0705-105-8000-M	0.705	17.91	0.105	2.67	8.000	203.20	4.956	125.87	4.639	117.84	61.45	273.32	20.18	3.53	**C0705-105-8000-S**	5.288	134.31	47.60	211.75	17.55	3.07

FOR INFORMATION ON ALTERNATIVE FINISHES, SEE PAGE 311

Part Numbers with an "*" are squared and not ground. **Part Numbers in bold** represent the newly expanded Associated Spring RAYMOND compression spring offering.

MUSIC WIRE															STAINLESS STEEL						
Catalog #	Outside Diameter (OD)		Wire Diameter (d)		Free Length (L) Approx		Load Length (L_1)		Solid Height (Sh) Approx		Load (P) at L_1		Spring Rate (R)		Catalog #	Load Length (L_1)		Load (P) at L_1		Spring Rate (R)	
	in	mm	in	mm	in	mm	in	mm	in	mm	lb	N	lb/in	N/mm		in	mm	lb	N	lb/in	N/mm
C0705-105-8500-M	0.705	17.91	0.105	2.67	8.500	215.90	5.260	133.61	4.923	125.04	61.45	273.32	18.97	3.32	**C0705-105-8500-S**	5.614	142.58	47.60	211.75	16.49	2.89
C0705-105-9000-M	0.705	17.91	0.105	2.67	9.000	228.60	5.565	141.35	5.207	132.25	61.45	273.32	17.89	3.13	**C0705-105-9000-S**	5.939	150.86	47.60	211.75	15.55	2.72
C0705-105-9500-M	0.705	17.91	0.105	2.67	9.500	241.30	5.869	149.08	5.490	139.45	61.45	273.32	16.92	2.96	**C0705-105-9500-S**	6.265	159.14	47.60	211.75	14.72	2.58
C0705-112-1000-M	0.705	17.91	0.112	2.85	1.000	25.40	0.726	18.45	0.712	18.08	73.22	325.68	267.56	46.82	**C0705-112-1000-S**	0.757	19.24	56.44	251.07	232.66	40.72
C0705-112-1125-M	0.705	17.91	0.112	2.85	1.125	28.58	0.807	20.50	0.789	20.03	73.22	325.68	230.44	40.33	**C0705-112-1125-S**	0.843	21.42	56.44	251.07	200.38	35.07
C0705-112-1250-M	0.705	17.91	0.112	2.85	1.250	31.75	0.888	22.56	0.866	21.99	73.22	325.68	202.36	35.41	**C0705-112-1250-S**	0.929	23.60	56.44	251.07	175.97	30.79
C0705-112-1375-M	0.705	17.91	0.112	2.85	1.375	34.93	0.969	24.62	0.942	23.94	73.22	325.68	180.39	31.57	**C0705-112-1375-S**	1.015	25.79	56.44	251.07	156.86	27.45
C0705-112-1500-M	0.705	17.91	0.112	2.85	1.500	38.10	1.050	26.67	1.019	25.89	73.22	325.68	162.72	28.48	**C0705-112-1500-S**	1.101	27.97	56.44	251.07	141.49	24.76
C0705-112-1625-M	0.705	17.91	0.112	2.85	1.625	41.28	1.131	28.73	1.096	27.84	73.22	325.68	148.20	25.93	**C0705-112-1625-S**	1.187	30.15	56.44	251.07	128.87	22.55
C0705-112-1750-M	0.705	17.91	0.112	2.85	1.750	44.45	1.212	30.78	1.173	29.79	73.22	325.68	136.06	23.81	**C0705-112-1750-S**	1.273	32.33	56.44	251.07	118.31	20.70
C0705-112-1875-M	0.705	17.91	0.112	2.85	1.875	47.63	1.293	32.84	1.250	31.74	73.22	325.68	125.76	22.01	**C0705-112-1875-S**	1.359	34.51	56.44	251.07	109.35	19.14
C0705-112-2000-M	0.705	17.91	0.112	2.85	2.000	50.80	1.374	34.89	1.326	33.69	73.22	325.68	116.91	20.46	**C0705-112-2000-S**	1.445	36.70	56.44	251.07	101.66	17.79
C0705-112-2125-M	0.705	17.91	0.112	2.85	2.125	53.98	1.455	36.95	1.403	35.64	73.22	325.68	109.22	19.11	**C0705-112-2125-S**	1.531	38.88	56.44	251.07	94.97	16.62
C0705-112-2250-M	0.705	17.91	0.112	2.85	2.250	57.15	1.536	39.00	1.480	37.59	73.22	325.68	102.48	17.93	**C0705-112-2250-S**	1.617	41.06	56.44	251.07	89.11	15.59
C0705-112-2375-M	0.705	17.91	0.112	2.85	2.375	60.33	1.616	41.06	1.557	39.54	73.22	325.68	96.53	16.89	**C0705-112-2375-S**	1.703	43.24	56.44	251.07	83.94	14.69
C0705-112-2500-M	0.705	17.91	0.112	2.85	2.500	63.50	1.697	43.11	1.634	41.49	73.22	325.68	91.22	15.96	**C0705-112-2500-S**	1.788	45.43	56.44	251.07	79.33	13.88
C0705-112-2625-M	0.705	17.91	0.112	2.85	2.625	66.68	1.778	45.17	1.710	43.44	73.22	325.68	86.48	15.13	**C0705-112-2625-S**	1.874	47.61	56.44	251.07	75.20	13.16
C0705-112-2750-M	0.705	17.91	0.112	2.85	2.750	69.85	1.859	47.22	1.787	45.39	73.22	325.68	82.20	14.38	**C0705-112-2750-S**	1.960	49.79	56.44	251.07	71.47	12.51
C0705-112-2875-M	0.705	17.91	0.112	2.85	2.875	73.03	1.940	49.28	1.864	47.34	73.22	325.68	78.32	13.71	**C0705-112-2875-S**	2.046	51.97	56.44	251.07	68.10	11.92
C0705-112-3000-M	0.705	17.91	0.112	2.85	3.000	76.20	2.021	51.34	1.941	49.29	73.22	325.68	74.79	13.09	**C0705-112-3000-S**	2.132	54.16	56.44	251.07	65.04	11.38
C0705-112-3250-M	0.705	17.91	0.112	2.85	3.250	82.55	2.183	55.45	2.094	53.20	73.22	325.68	68.61	12.01	**C0705-112-3250-S**	2.304	58.52	56.44	251.07	59.66	10.44
C0705-112-3500-M	0.705	17.91	0.112	2.85	3.500	88.90	2.345	59.56	2.248	57.10	73.22	325.68	63.38	11.09	**C0705-112-3500-S**	2.476	62.89	56.44	251.07	55.11	9.64
C0705-112-3750-M	0.705	17.91	0.112	2.85	3.750	95.25	2.507	63.67	2.402	61.00	73.22	325.68	58.88	10.30	**C0705-112-3750-S**	2.648	67.25	56.44	251.07	51.20	8.96
C0705-112-4000-M	0.705	17.91	0.112	2.85	4.000	101.60	2.668	67.78	2.555	64.90	73.22	325.68	54.99	9.62	**C0705-112-4000-S**	2.820	71.62	56.44	251.07	47.81	8.37
C0705-112-4250-M	0.705	17.91	0.112	2.85	4.250	107.95	2.830	71.89	2.709	68.80	73.22	325.68	51.57	9.02	**C0705-112-4250-S**	2.991	75.98	56.44	251.07	44.84	7.85
C0705-112-4500-M	0.705	17.91	0.112	2.85	4.500	114.30	2.992	76.00	2.862	72.70	73.22	325.68	48.56	8.50	**C0705-112-4500-S**	3.163	80.35	56.44	251.07	42.22	7.39
C0705-112-4750-M	0.705	17.91	0.112	2.85	4.750	120.65	3.154	80.11	3.016	76.60	73.22	325.68	45.87	8.03	**C0705-112-4750-S**	3.335	84.71	56.44	251.07	39.89	6.98
C0705-112-5000-M	0.705	17.91	0.112	2.85	5.000	127.00	3.316	84.22	3.170	80.51	73.22	325.68	43.47	7.61	**C0705-112-5000-S**	3.507	89.07	56.44	251.07	37.80	6.62
C0705-112-5250-M	0.705	17.91	0.112	2.85	5.250	133.35	3.478	88.33	3.323	84.41	73.22	325.68	41.31	7.23	**C0705-112-5250-S**	3.679	93.44	56.44	251.07	35.92	6.29
C0705-112-5500-M	0.705	17.91	0.112	2.85	5.500	139.70	3.639	92.44	3.477	88.31	73.22	325.68	39.35	6.89	**C0705-112-5500-S**	3.851	97.80	56.44	251.07	34.22	5.99
C0705-112-5750-M	0.705	17.91	0.112	2.85	5.750	146.05	3.801	96.55	3.630	92.21	73.22	325.68	37.57	6.58	**C0705-112-5750-S**	4.022	102.17	56.44	251.07	32.67	5.72
C0705-112-6000-M	0.705	17.91	0.112	2.85	6.000	152.40	3.963	100.66	3.784	96.11	73.22	325.68	35.95	6.29	**C0705-112-6000-S**	4.194	106.53	56.44	251.07	31.26	5.47
C0705-112-6250-M	0.705	17.91	0.112	2.85	6.250	158.75	4.125	104.78	3.938	100.01	73.22	325.68	34.46	6.03	**C0705-112-6250-S**	4.366	110.90	56.44	251.07	29.96	5.24
C0705-112-6500-M	0.705	17.91	0.112	2.85	6.500	165.10	4.287	108.89	4.091	103.91	73.22	325.68	33.08	5.79	**C0705-112-6500-S**	4.538	115.26	56.44	251.07	28.77	5.03
C0705-112-6750-M	0.705	17.91	0.112	2.85	6.750	171.45	4.449	113.00	4.245	107.82	73.22	325.68	31.82	5.57	**C0705-112-6750-S**	4.710	119.63	56.44	251.07	27.67	4.84
C0705-112-7000-M	0.705	17.91	0.112	2.85	7.000	177.80	4.611	117.11	4.398	111.72	73.22	325.68	30.64	5.36	**C0705-112-7000-S**	4.882	123.99	56.44	251.07	26.65	4.66
C0705-112-7500-M	0.705	17.91	0.112	2.85	7.500	190.50	4.934	125.33	4.705	119.52	73.22	325.68	28.54	4.99	**C0705-112-7500-S**	5.225	132.72	56.44	251.07	24.81	4.34
C0705-112-8000-M	0.705	17.91	0.112	2.85	8.000	203.20	5.258	133.55	5.013	127.32	73.22	325.68	26.70	4.67	**C0705-112-8000-S**	5.569	141.45	56.44	251.07	23.22	4.06
C0705-112-8500-M	0.705	17.91	0.112	2.85	8.500	215.90	5.582	141.77	5.320	135.12	73.22	325.68	25.09	4.39	**C0705-112-8500-S**	5.913	150.18	56.44	251.07	21.82	3.82
C0705-112-9000-M	0.705	17.91	0.112	2.85	9.000	228.60	5.905	149.99	5.627	142.93	73.22	325.68	23.66	4.14	**C0705-112-9000-S**	6.256	158.91	56.44	251.07	20.57	3.60
C0705-112-9500-M	0.705	17.91	0.112	2.85	9.500	241.30	6.229	158.21	5.934	150.73	73.22	325.68	22.38	3.92	**C0705-112-9500-S**	6.600	167.64	56.44	251.07	19.46	3.41
C0705-125-1125-M	0.705	17.91	0.125	3.18	1.125	28.58	0.872	22.15	0.869	22.07	98.45	437.92	389.33	68.13	**C0705-125-1125-S**	0.903	22.93	75.18	334.41	338.55	59.25
C0705-125-1250-M	0.705	17.91	0.125	3.18	1.250	31.75	0.961	24.41	0.956	24.27	98.45	437.92	340.66	59.62	**C0705-125-1250-S**	0.996	25.30	75.18	334.41	296.23	51.84
C0705-125-1375-M	0.705	17.91	0.125	3.18	1.375	34.93	1.050	26.67	1.042	26.47	98.45	437.92	302.81	52.99	**C0705-125-1375-S**	1.089	27.67	75.18	334.41	263.31	46.08
C0705-125-1500-M	0.705	17.91	0.125	3.18	1.500	38.10	1.139	28.92	1.129	28.67	98.45	437.92	272.53	47.69	**C0705-125-1500-S**	1.183	30.04	75.18	334.41	236.98	41.47
C0705-125-1625-M	0.705	17.91	0.125	3.18	1.625	41.28	1.228	31.18	1.215	30.87	98.45	437.92	247.75	43.36	**C0705-125-1625-S**	1.276	32.41	75.18	334.41	215.44	37.70
C0705-125-1750-M	0.705	17.91	0.125	3.18	1.750	44.45	1.317	33.44	1.302	33.07	98.45	437.92	227.11	39.74	**C0705-125-1750-S**	1.369	34.78	75.18	334.41	197.48	34.56
C0705-125-1875-M	0.705	17.91	0.125	3.18	1.875	47.63	1.405	35.70	1.389	35.27	98.45	437.92	209.64	36.69	**C0705-125-1875-S**	1.463	37.15	75.18	334.41	182.29	31.90
C0705-125-2000-M	0.705	17.91	0.125	3.18	2.000	50.80	1.494	37.95	1.475	37.47	98.45	437.92	194.66	34.07	**C0705-125-2000-S**	1.556	39.52	75.18	334.41	169.27	29.62
C0705-125-2125-M	0.705	17.91	0.125	3.18	2.125	53.98	1.583	40.21	1.562	39.67	98.45	437.92	181.69	31.80	**C0705-125-2125-S**	1.649	41.89	75.18	334.41	157.99	27.65
C0705-125-2250-M	0.705	17.91	0.125	3.18	2.250	57.15	1.672	42.47	1.649	41.87	98.45	437.92	170.33	29.81	**C0705-125-2250-S**	1.742	44.26	75.18	334.41	148.11	25.92
C0705-125-2375-M	0.705	17.91	0.125	3.18	2.375	60.33	1.761	44.73	1.735	44.07	98.45	437.92	160.31	28.05	**C0705-125-2375-S**	1.836	46.63	75.18	334.41	139.40	24.40
C0705-125-2500-M	0.705	17.91	0.125	3.18	2.500	63.50	1.850	46.98	1.822	46.27	98.45	437.92	151.41	26.50	**C0705-125-2500-S**	1.929	49.00	75.18	334.41	131.66	23.04
C0705-125-2625-M	0.705	17.91	0.125	3.18	2.625	66.68	1.939	49.24	1.908	48.47	98.45	437.92	143.44	25.10	**C0705-125-2625-S**	2.022	51.37	75.18	334.41	124.73	21.83
C0705-125-2750-M	0.705	17.91	0.125	3.18	2.750	69.85	2.028	51.50	1.995	50.67	98.45	437.92	136.26	23.85	**C0705-125-2750-S**	2.116	53.73	75.18	334.41	118.49	20.74
C0705-125-2875-M	0.705	17.91	0.125	3.18	2.875	73.03	2.116	53.76	2.082	52.87	98.45	437.92	129.78	22.71	**C0705-125-2875-S**	2.209	56.10	75.18	334.41	112.85	19.75
C0705-125-3000-M	0.705	17.91	0.125	3.18	3.000	76.20	2.205	56.01	2.168	55.07	98.45	437.92	123.88	21.68	**C0705-125-3000-S**	2.302	58.47	75.18	334.41	107.72	18.85
C0705-125-3250-M	0.705	17.91	0.125	3.18	3.250	82.55	2.383	60.53	2.342	59.48	98.45	437.92	113.55	19.87	**C0705-125-3250-S**	2.489	63.21	75.18	334.41	98.74	17.28
C0705-125-3500-M	0.705	17.91	0.125	3.18	3.500	88.90	2.561	65.04	2.515	63.88	98.45	437.92	104.82	18.34	**C0705-125-3500-S**	2.675	67.95	75.18	334.41	91.15	15.95
C0705-125-3750-M	0.705	17.91	0.125	3.18	3.750	95.25	2.739	69.56	2.688	68.28	98.45	437.92	97.33	17.03	**C0705-125-3750-S**	2.862	72.69	75.18	334.41	84.64	14.81
C0705-125-4000-M	0.705	17.91	0.125	3.18	4.000	101.60	2.916	74.07	2.861	72.68	98.45	437.92	90.84	15.90	**C0705-125-4000-S**	3.048	77.43	75.18	334.41	78.99	13.82
C0705-125-4250-M	0.705	17.91	0.125	3.18	4.250	107.95	3.094	78.59	3.035	77.08	98.45	437.92	85.17	14.90	**C0705-125-4250-S**	3.235	82.17	75.18	334.41	74.06	12.96
C0705-125-4500-M	0.705	17.91	0.125	3.18	4.500	114.30	3.272	83.10	3.208	81.48	98.45	437.92	80.16	14.03	**C0705-125-4500-S**	3.421	86.90	75.18	334.41	69.70	12.20
C0705-125-4750-M	0.705	17.91	0.125	3.18	4.750	120.65	3.450	87.62	3.381	85.88	98.45	437.92	75.70	13.25	**C0705-125-4750-S**	3.608	91.64	75.18	334.41	65.83	11.52

Part Numbers with an "*" are squared and not ground. **Part Numbers in bold** represent the newly expanded Associated Spring RAYMOND compression spring offering.

MUSIC WIRE															STAINLESS STEEL						
Catalog #	Outside Diameter (OD)		Wire Diameter (d)		Free Length (L) Approx		Load Length (L_1)		Solid Height (Sh) Approx		Load (P) at L_1		Spring Rate (R)		Catalog #	Load Length (L_1)		Load (P) at L_1		Spring Rate (R)	
	in	mm	in	mm	in	mm	in	mm	in	mm	lb	N	lb/in	N/mm		in	mm	lb	N	lb/in	N/mm
C0705-125-5000-M	**0.705**	**17.91**	**0.125**	**3.18**	**5.000**	**127.00**	**3.627**	**92.13**	**3.554**	**90.28**	**98.45**	**437.92**	**71.72**	**12.55**	**C0705-125-5000-S**	**3.795**	**96.38**	**75.18**	**334.41**	**62.36**	**10.91**
C0705-125-5250-M	**0.705**	**17.91**	**0.125**	**3.18**	**5.250**	**133.35**	**3.805**	**96.65**	**3.728**	**94.68**	**98.45**	**437.92**	**68.13**	**11.92**	**C0705-125-5250-S**	**3.981**	**101.12**	**75.18**	**334.41**	**59.25**	**10.37**
C0705-125-5500-M	**0.705**	**17.91**	**0.125**	**3.18**	**5.500**	**139.70**	**3.983**	**101.16**	**3.901**	**99.08**	**98.45**	**437.92**	**64.89**	**11.36**	**C0705-125-5500-S**	**4.168**	**105.86**	**75.18**	**334.41**	**56.42**	**9.87**
C0705-125-5750-M	**0.705**	**17.91**	**0.125**	**3.18**	**5.750**	**146.05**	**4.161**	**105.68**	**4.074**	**103.48**	**98.45**	**437.92**	**61.94**	**10.84**	**C0705-125-5750-S**	**4.354**	**110.60**	**75.18**	**334.41**	**53.86**	**9.43**
C0705-125-6000-M	**0.705**	**17.91**	**0.125**	**3.18**	**6.000**	**152.40**	**4.338**	**110.19**	**4.247**	**107.88**	**98.45**	**437.92**	**59.25**	**10.37**	**C0705-125-6000-S**	**4.541**	**115.33**	**75.18**	**334.41**	**51.52**	**9.02**
C0705-125-6250-M	**0.705**	**17.91**	**0.125**	**3.18**	**6.250**	**158.75**	**4.516**	**114.71**	**4.421**	**112.28**	**98.45**	**437.92**	**56.78**	**9.94**	**C0705-125-6250-S**	**4.727**	**120.07**	**75.18**	**334.41**	**49.37**	**8.64**
C0705-125-6500-M	**0.705**	**17.91**	**0.125**	**3.18**	**6.500**	**165.10**	**4.694**	**119.22**	**4.594**	**116.68**	**98.45**	**437.92**	**54.51**	**9.54**	**C0705-125-6500-S**	**4.914**	**124.81**	**75.18**	**334.41**	**47.40**	**8.29**
C0705-125-6750-M	**0.705**	**17.91**	**0.125**	**3.18**	**6.750**	**171.45**	**4.872**	**123.74**	**4.767**	**121.08**	**98.45**	**437.92**	**52.41**	**9.17**	**C0705-125-6750-S**	**5.100**	**129.55**	**75.18**	**334.41**	**45.57**	**7.98**
C0705-125-7000-M	**0.705**	**17.91**	**0.125**	**3.18**	**7.000**	**177.80**	**5.049**	**128.25**	**4.940**	**125.48**	**98.45**	**437.92**	**50.47**	**8.83**	**C0705-125-7000-S**	**5.287**	**134.29**	**75.18**	**334.41**	**43.89**	**7.68**
C0705-125-7500-M	**0.705**	**17.91**	**0.125**	**3.18**	**7.500**	**190.50**	**5.405**	**137.28**	**5.287**	**134.29**	**98.45**	**437.92**	**46.99**	**8.22**	**C0705-125-7500-S**	**5.660**	**143.77**	**75.18**	**334.41**	**40.86**	**7.15**
C0705-125-8000-M	**0.705**	**17.91**	**0.125**	**3.18**	**8.000**	**203.20**	**5.760**	**146.31**	**5.633**	**143.09**	**98.45**	**437.92**	**43.96**	**7.69**	**C0705-125-8000-S**	**6.033**	**153.24**	**75.18**	**334.41**	**38.22**	**6.69**
C0705-125-8500-M	**0.705**	**17.91**	**0.125**	**3.18**	**8.500**	**215.90**	**6.116**	**155.34**	**5.980**	**151.89**	**98.45**	**437.92**	**41.29**	**7.23**	**C0705-125-8500-S**	**6.406**	**162.72**	**75.18**	**334.41**	**35.91**	**6.28**
C0705-125-9000-M	**0.705**	**17.91**	**0.125**	**3.18**	**9.000**	**228.60**	**6.471**	**164.37**	**6.326**	**160.69**	**98.45**	**437.92**	**38.93**	**6.81**	**C0705-125-9000-S**	**6.779**	**172.20**	**75.18**	**334.41**	**33.85**	**5.92**
C0705-125-9500-M	**0.705**	**17.91**	**0.125**	**3.18**	**9.500**	**241.30**	**6.827**	**173.40**	**6.673**	**169.49**	**98.45**	**437.92**	**36.83**	**6.44**	**C0705-125-9500-S**	**7.152**	**181.67**	**75.18**	**334.41**	**32.02**	**5.60**
C0705-135-1125-M	**0.705**	**17.91**	**0.135**	**3.43**	**1.125**	**28.58**	**0.951**	**24.17**	**0.921**	**23.39**	**99.54**	**442.77**	**573.46**	**100.36**	**C0705-135-1125-S**	**0.941**	**23.91**	**91.64**	**407.65**	**498.66**	**87.27**
C0705-135-1250-M	**0.705**	**17.91**	**0.135**	**3.43**	**1.250**	**31.75**	**1.049**	**26.65**	**1.014**	**25.75**	**100.38**	**446.50**	**500.31**	**87.55**	**C0705-135-1250-S**	**1.039**	**26.40**	**91.64**	**407.65**	**435.06**	**76.13**
C0705-135-1375-M	**0.705**	**17.91**	**0.135**	**3.43**	**1.375**	**34.93**	**1.147**	**29.14**	**1.107**	**28.12**	**101.03**	**449.39**	**443.72**	**77.65**	**C0705-135-1375-S**	**1.137**	**28.89**	**91.64**	**407.65**	**385.84**	**67.52**
C0705-135-1750-M	**0.705**	**17.91**	**0.135**	**3.43**	**1.750**	**44.45**	**1.441**	**36.61**	**1.387**	**35.22**	**102.32**	**455.13**	**331.29**	**57.98**	**C0705-135-1750-S**	**1.432**	**36.37**	**91.64**	**407.65**	**288.08**	**50.41**
C0705-135-1875-M	**0.705**	**17.91**	**0.135**	**3.43**	**1.875**	**47.63**	**1.539**	**39.09**	**1.480**	**37.59**	**102.61**	**456.45**	**305.49**	**53.46**	**C0705-135-1875-S**	**1.530**	**38.86**	**91.64**	**407.65**	**265.64**	**46.49**
C0705-135-2000-M	**0.705**	**17.91**	**0.135**	**3.43**	**2.000**	**50.80**	**1.573**	**39.96**	**1.573**	**39.95**	**120.91**	**537.84**	**283.42**	**49.60**	**C0705-135-2000-S**	**1.628**	**41.35**	**91.64**	**407.65**	**246.45**	**43.13**
C0705-135-2125-M	**0.705**	**17.91**	**0.135**	**3.43**	**2.125**	**53.98**	**1.668**	**42.36**	**1.666**	**42.32**	**120.91**	**537.84**	**264.32**	**46.26**	**C0705-135-2125-S**	**1.726**	**43.85**	**91.64**	**407.65**	**229.84**	**40.22**
C0705-135-2250-M	**0.705**	**17.91**	**0.135**	**3.43**	**2.250**	**57.15**	**1.762**	**44.75**	**1.759**	**44.69**	**120.91**	**537.84**	**247.63**	**43.34**	**C0705-135-2250-S**	**1.824**	**46.34**	**91.64**	**407.65**	**215.33**	**37.68**
C0705-135-2375-M	**0.705**	**17.91**	**0.135**	**3.43**	**2.375**	**60.33**	**1.856**	**47.14**	**1.853**	**47.05**	**120.91**	**537.84**	**232.93**	**40.76**	**C0705-135-2375-S**	**1.923**	**48.83**	**91.64**	**407.65**	**202.54**	**35.45**
C0705-135-2500-M	**0.705**	**17.91**	**0.135**	**3.43**	**2.500**	**63.50**	**1.950**	**49.53**	**1.946**	**49.42**	**120.91**	**537.84**	**219.87**	**38.48**	**C0705-135-2500-S**	**2.021**	**51.32**	**91.64**	**407.65**	**191.19**	**33.46**
C0705-135-2625-M	**0.705**	**17.91**	**0.135**	**3.43**	**2.625**	**66.68**	**2.044**	**51.92**	**2.039**	**51.79**	**120.91**	**537.84**	**208.20**	**36.43**	**C0705-135-2625-S**	**2.119**	**53.82**	**91.64**	**407.65**	**181.04**	**31.68**
C0705-135-2750-M	**0.705**	**17.91**	**0.135**	**3.43**	**2.750**	**69.85**	**2.138**	**54.32**	**2.132**	**54.15**	**120.91**	**537.84**	**197.71**	**34.60**	**C0705-135-2750-S**	**2.217**	**56.31**	**91.64**	**407.65**	**171.92**	**30.09**
C0705-135-2875-M	**0.705**	**17.91**	**0.135**	**3.43**	**2.875**	**73.03**	**2.233**	**56.71**	**2.225**	**56.52**	**120.91**	**537.84**	**188.22**	**32.94**	**C0705-135-2875-S**	**2.315**	**58.80**	**91.64**	**407.65**	**163.67**	**28.64**
C0705-135-3000-M	**0.705**	**17.91**	**0.135**	**3.43**	**3.000**	**76.20**	**2.327**	**59.10**	**2.318**	**58.89**	**120.91**	**537.84**	**179.60**	**31.43**	**C0705-135-3000-S**	**2.413**	**61.30**	**91.64**	**407.65**	**156.17**	**27.33**
C0705-135-3250-M	**0.705**	**17.91**	**0.135**	**3.43**	**3.250**	**82.55**	**2.515**	**63.88**	**2.505**	**63.62**	**120.91**	**537.84**	**164.53**	**28.79**	**C0705-135-3250-S**	**2.609**	**66.28**	**91.64**	**407.65**	**143.07**	**25.04**
C0705-135-3500-M	**0.705**	**17.91**	**0.135**	**3.43**	**3.500**	**88.90**	**2.703**	**68.67**	**2.691**	**68.35**	**120.91**	**537.84**	**151.80**	**26.56**	**C0705-135-3500-S**	**2.806**	**71.27**	**91.64**	**407.65**	**132.00**	**23.10**
C0705-135-3750-M	**0.705**	**17.91**	**0.135**	**3.43**	**3.750**	**95.25**	**2.892**	**73.45**	**2.877**	**73.09**	**120.91**	**537.84**	**140.89**	**24.66**	**C0705-135-3750-S**	**3.002**	**76.25**	**91.64**	**407.65**	**122.52**	**21.44**
C0705-135-4000-M	**0.705**	**17.91**	**0.135**	**3.43**	**4.000**	**101.60**	**3.080**	**78.24**	**3.064**	**77.82**	**120.91**	**537.84**	**131.45**	**23.00**	**C0705-135-4000-S**	**3.198**	**81.24**	**91.64**	**407.65**	**114.30**	**20.00**
C0705-135-4250-M	**0.705**	**17.91**	**0.135**	**3.43**	**4.250**	**107.95**	**3.269**	**83.02**	**3.250**	**82.55**	**120.91**	**537.84**	**123.19**	**21.56**	**C0705-135-4250-S**	**3.395**	**86.22**	**91.64**	**407.65**	**107.12**	**18.75**
C0705-135-4500-M	**0.705**	**17.91**	**0.135**	**3.43**	**4.500**	**114.30**	**3.457**	**87.80**	**3.436**	**87.29**	**120.91**	**537.84**	**115.91**	**20.28**	**C0705-135-4500-S**	**3.591**	**91.21**	**91.64**	**407.65**	**100.79**	**17.64**
C0705-135-4750-M	**0.705**	**17.91**	**0.135**	**3.43**	**4.750**	**120.65**	**3.645**	**92.59**	**3.623**	**92.02**	**120.91**	**537.84**	**109.44**	**19.15**	**C0705-135-4750-S**	**3.787**	**96.19**	**91.64**	**407.65**	**95.17**	**16.65**
C0705-135-5000-M	**0.705**	**17.91**	**0.135**	**3.43**	**5.000**	**127.00**	**3.834**	**97.37**	**3.809**	**96.75**	**120.91**	**537.84**	**103.66**	**18.14**	**C0705-135-5000-S**	**3.983**	**101.18**	**91.64**	**407.65**	**90.14**	**15.77**
C0705-135-5250-M	**0.705**	**17.91**	**0.135**	**3.43**	**5.250**	**133.35**	**4.022**	**102.16**	**3.995**	**101.48**	**120.91**	**537.84**	**98.46**	**17.23**	**C0705-135-5250-S**	**4.180**	**106.16**	**91.64**	**407.65**	**85.61**	**14.98**
C0705-135-5500-M	**0.705**	**17.91**	**0.135**	**3.43**	**5.500**	**139.70**	**4.210**	**106.94**	**4.182**	**106.22**	**120.91**	**537.84**	**93.75**	**16.41**	**C0705-135-5500-S**	**4.376**	**111.15**	**91.64**	**407.65**	**81.52**	**14.27**
C0705-135-5750-M	**0.705**	**17.91**	**0.135**	**3.43**	**5.750**	**146.05**	**4.399**	**111.72**	**4.368**	**110.95**	**120.91**	**537.84**	**89.47**	**15.66**	**C0705-135-5750-S**	**4.572**	**116.13**	**91.64**	**407.65**	**77.80**	**13.62**
C0705-135-6000-M	**0.705**	**17.91**	**0.135**	**3.43**	**6.000**	**152.40**	**4.587**	**116.51**	**4.554**	**115.68**	**120.91**	**537.84**	**85.57**	**14.97**	**C0705-135-6000-S**	**4.768**	**121.12**	**91.64**	**407.65**	**74.41**	**13.02**
C0705-135-6250-M	**0.705**	**17.91**	**0.135**	**3.43**	**6.250**	**158.75**	**4.775**	**121.29**	**4.741**	**120.42**	**120.91**	**537.84**	**81.99**	**14.35**	**C0705-135-6250-S**	**4.965**	**126.10**	**91.64**	**407.65**	**71.30**	**12.48**
C0705-135-6500-M	**0.705**	**17.91**	**0.135**	**3.43**	**6.500**	**165.10**	**4.964**	**126.08**	**4.927**	**125.15**	**120.91**	**537.84**	**78.70**	**13.77**	**C0705-135-6500-S**	**5.161**	**131.09**	**91.64**	**407.65**	**68.44**	**11.98**
C0705-135-6750-M	**0.705**	**17.91**	**0.135**	**3.43**	**6.750**	**171.45**	**5.152**	**130.86**	**5.114**	**129.88**	**120.91**	**537.84**	**75.67**	**13.24**	**C0705-135-6750-S**	**5.357**	**136.07**	**91.64**	**407.65**	**65.80**	**11.51**
C0705-135-7000-M	**0.705**	**17.91**	**0.135**	**3.43**	**7.000**	**177.80**	**5.340**	**135.65**	**5.300**	**134.62**	**120.91**	**537.84**	**72.85**	**12.75**	**C0705-135-7000-S**	**5.553**	**141.06**	**91.64**	**407.65**	**63.35**	**11.09**
C0705-135-7500-M	**0.705**	**17.91**	**0.135**	**3.43**	**7.500**	**190.50**	**5.717**	**145.21**	**5.673**	**144.08**	**120.91**	**537.84**	**67.82**	**11.87**	**C0705-135-7500-S**	**5.946**	**151.03**	**91.64**	**407.65**	**58.97**	**10.32**
C0705-135-8000-M	**0.705**	**17.91**	**0.135**	**3.43**	**8.000**	**203.20**	**6.094**	**154.78**	**6.045**	**153.55**	**120.91**	**537.84**	**63.43**	**11.10**	**C0705-135-8000-S**	**6.338**	**161.00**	**91.64**	**407.65**	**55.16**	**9.65**
C0705-135-8500-M	**0.705**	**17.91**	**0.135**	**3.43**	**8.500**	**215.90**	**6.470**	**164.35**	**6.418**	**163.01**	**120.91**	**537.84**	**59.58**	**10.43**	**C0705-135-8500-S**	**6.731**	**170.97**	**91.64**	**407.65**	**51.81**	**9.07**
C0705-135-9000-M	**0.705**	**17.91**	**0.135**	**3.43**	**9.000**	**228.60**	**6.847**	**173.92**	**6.791**	**172.48**	**120.91**	**537.84**	**56.16**	**9.83**	**C0705-135-9000-S**	**7.123**	**180.94**	**91.64**	**407.65**	**48.84**	**8.55**
C0705-135-9500-M	**0.705**	**17.91**	**0.135**	**3.43**	**9.500**	**241.30**	**7.224**	**183.49**	**7.163**	**181.95**	**120.91**	**537.84**	**53.12**	**9.30**	**C0705-135-9500-S**	**7.516**	**190.91**	**91.64**	**407.65**	**46.19**	**8.08**
D12700	0.709	18.00	0.079	2.00	1.181	30.00	0.492	12.50	0.433	11.00	44.53	198.09	65.03	11.38	D22700	0.492	12.50	37.10	165.01	54.17	9.48
D12710	0.709	18.00	0.079	2.00	1.772	45.00	0.697	17.70	0.591	15.00	44.53	198.09	41.37	7.24	D22710	0.697	17.70	37.10	165.01	34.46	6.03
D12720	0.709	18.00	0.079	2.00	2.677	68.00	1.004	25.50	0.827	21.00	44.53	198.09	26.80	4.69	D22720	1.004	25.50	37.10	165.01	22.34	3.91
D12730	0.709	18.00	0.079	2.00	3.858	98.00	1.413	35.90	1.142	29.00	44.53	198.09	18.23	3.19	D22730	1.413	35.90	37.10	165.01	15.20	2.66
D12740	0.709	18.00	0.079	2.00	5.709	145.00	2.024	51.40	1.614	41.00	44.53	198.09	12.34	2.16	D22740	2.024	51.40	37.10	165.01	10.29	1.80
C0720-055-0620-M	0.720	18.29	0.055	1.40	0.620	15.75	0.320	8.13	0.241	6.12	9.75	43.37	32.50	5.69	C0720-055-0620-S	0.366	9.29	6.88	30.59	27.07	4.74
C0720-055-0750-M	0.720	18.29	0.055	1.40	0.750	19.05	0.326	8.28	0.221	5.61	9.75	43.37	23.00	4.03	C0720-055-0750-S	0.391	9.93	6.88	30.59	19.16	3.35
C0720-055-0880-M	0.720	18.29	0.055	1.40	0.880	22.35	0.393	9.98	0.238	6.05	9.75	43.37	20.00	3.50	C0720-055-0880-S	0.467	11.87	6.88	30.59	16.66	2.92
C0720-055-1000-M	0.720	18.29	0.055	1.40	1.000	25.40	0.473	12.01	0.248	6.30	9.75	43.37	18.50	3.24	C0720-055-1000-S	0.554	14.06	6.88	30.59	15.41	2.70
C0720-055-1250-M	0.720	18.29	0.055	1.40	1.250	31.75	0.600	15.24	0.281	7.14	9.75	43.37	15.00	2.63	C0720-055-1250-S	0.700	17.77	6.88	30.59	12.50	2.19
C0720-055-1500-M	0.720	18.29	0.055	1.40	1.500	38.10	0.652	16.56	0.333	8.46	9.75	43.37	11.50	2.01	C0720-055-1500-S	0.782	19.86	6.88	30.59	9.58	1.68
C0720-055-1750-M	0.720	18.29	0.055	1.40	1.750	44.45	0.690	17.53	0.388	9.86	9.75	43.37	9.20	1.61	C0720-055-1750-S	0.853	21.65	6.88	30.59	7.66	1.34
C0720-055-2000-M	0.720	18.29	0.055	1.40	2.000	50.80	0.853	21.67	0.411	10.44	9.75	43.37	8.50	1.49	C0720-055-2000-S	1.029	26.13	6.88	30.59	7.08	1.24
C0720-055-2250-M	0.720	18.29	0.055	1.40	2.250	57.15	0.992	25.20	0.482	12.24	9.75	43.37	7.80	1.37	C0720-055-2250-S	1.191	30.26	6.88	30.59	6.50	1.14
C0720-055-2500-M	0.720	18.29	0.055	1.40	2.500	63.50	1.095	27.81	0.519	13.18	9.75	43.37	6.90	1.21	C0720-055-2500-S	1.303	33.11	6.88	30.59	5.75	1.01

FOR INFORMATION ON ALTERNATIVE FINISHES, SEE PAGE 311

Part Numbers with an "*" are squared and not ground. **Part Numbers in bold** represent the newly expanded Associated Spring RAYMOND compression spring offering.

MUSIC WIRE															STAINLESS STEEL						
Catalog #	Outside Diameter (OD)		Wire Diameter (d)		Free Length (L) Approx		Load Length (L_1)		Solid Height (Sh) Approx		Load (P) at L_1		Spring Rate (R)		Catalog #	Load Length (L_1)		Load (P) at L_1		Spring Rate (R)	
	in	mm	in	mm	in	mm	in	mm	in	mm	lb	N	lb/in	N/mm		in	mm	lb	N	lb/in	N/mm
C0720-055-2750-M	0.720	18.29	0.055	1.40	2.750	69.85	1.198	30.43	0.556	14.12	9.75	43.37	6.30	1.10	C0720-055-2750-S	1.439	36.56	6.88	30.59	5.25	0.92
C0720-055-3000-M	0.720	18.29	0.055	1.40	3.000	76.20	1.302	33.07	0.593	15.06	9.75	43.37	5.70	1.00	C0720-055-3000-S	1.551	39.41	6.88	30.59	4.75	0.83
C0720-059-0750-M	0.720	18.29	0.059	1.50	0.750	19.05	0.389	9.88	0.285	7.24	11.88	52.84	32.90	5.76	C0720-059-0750-S	0.445	11.29	8.37	37.23	27.41	4.80
C0720-059-0880-M	0.720	18.29	0.059	1.50	0.880	22.35	0.444	11.28	0.308	7.82	11.88	52.84	27.30	4.78	C0720-059-0880-S	0.512	13.00	8.37	37.23	22.74	3.98
C0720-059-1000-M	0.720	18.29	0.059	1.50	1.000	25.40	0.496	12.60	0.328	8.33	11.88	52.84	23.50	4.11	C0720-059-1000-S	0.572	14.54	8.37	37.23	19.58	3.43
C0720-059-1250-M	0.720	18.29	0.059	1.50	1.250	31.75	0.603	15.32	0.371	9.42	11.88	52.84	18.30	3.20	C0720-059-1250-S	0.701	17.80	8.37	37.23	15.24	2.67
C0720-059-1500-M	0.720	18.29	0.059	1.50	1.500	38.10	0.710	18.03	0.414	10.52	11.88	52.84	15.00	2.63	C0720-059-1500-S	0.830	21.09	8.37	37.23	12.50	2.19
C0720-059-1750-M	0.720	18.29	0.059	1.50	1.750	44.45	0.817	20.75	0.457	11.61	11.88	52.84	12.70	2.22	C0720-059-1750-S	0.959	24.36	8.37	37.23	10.58	1.85
C0720-059-2000-M	0.720	18.29	0.059	1.50	2.000	50.80	0.924	23.47	0.499	12.67	11.88	52.84	11.00	1.93	C0720-059-2000-S	1.087	27.60	8.37	37.23	9.16	1.60
C0720-059-2250-M	0.720	18.29	0.059	1.50	2.250	57.15	1.031	26.19	0.542	13.77	11.88	52.84	9.70	1.70	C0720-059-2250-S	1.214	30.84	8.37	37.23	8.08	1.41
C0720-059-2500-M	0.720	18.29	0.059	1.50	2.500	63.50	1.138	28.91	0.585	14.86	11.88	52.84	8.70	1.52	C0720-059-2500-S	1.345	34.17	8.37	37.23	7.25	1.27
C0720-063-0620-M	0.720	18.29	0.063	1.60	0.620	15.75	0.351	8.92	0.286	7.26	14.00	62.28	52.00	9.10	C0720-063-0620-S	0.391	9.93	9.92	44.15	43.32	7.58
C0720-063-0750-M	0.720	18.29	0.063	1.60	0.750	19.05	0.325	8.26	0.284	7.21	14.00	62.28	33.00	5.78	C0720-063-0750-S	0.389	9.88	9.92	44.15	27.49	4.81
C0720-063-0880-M	0.720	18.29	0.063	1.60	0.880	22.35	0.380	9.65	0.313	7.95	14.00	62.28	28.00	4.90	C0720-063-0880-S	0.455	11.54	9.92	44.15	23.32	4.08
C0720-063-1000-M	0.720	18.29	0.063	1.60	1.000	25.40	0.420	10.67	0.344	8.74	14.00	62.28	24.00	4.20	C0720-063-1000-S	0.504	12.79	9.92	44.15	19.99	3.50
C0720-063-1250-M	0.720	18.29	0.063	1.60	1.250	31.75	0.490	12.45	0.409	10.39	14.00	62.28	18.50	3.24	C0720-063-1250-S	0.606	15.39	9.92	44.15	15.41	2.70
C0720-063-1500-M	0.720	18.29	0.063	1.60	1.500	38.10	0.570	14.48	0.475	12.07	14.00	62.28	15.00	2.63	C0720-063-1500-S	0.706	17.93	9.92	44.15	12.50	2.19
C0720-063-1750-M	0.720	18.29	0.063	1.60	1.750	44.45	0.680	17.27	0.529	13.44	14.00	62.28	13.00	2.28	C0720-063-1750-S	0.834	21.17	9.92	44.15	10.83	1.90
C0720-063-2000-M	0.720	18.29	0.063	1.60	2.000	50.80	0.730	18.54	0.602	15.29	14.00	62.28	11.00	1.93	C0720-063-2000-S	0.917	23.29	9.92	44.15	9.16	1.60
C0720-063-2250-M	0.720	18.29	0.063	1.60	2.250	57.15	1.093	27.76	0.605	15.37	14.00	62.28	12.10	2.12	C0720-063-2250-S	1.265	32.14	9.92	44.15	10.08	1.76
C0720-063-2500-M	0.720	18.29	0.063	1.60	2.500	63.50	1.204	30.58	0.654	16.61	14.00	62.28	10.80	1.89	C0720-063-2500-S	1.397	35.48	9.92	44.15	9.00	1.57
C0720-063-2750-M	0.720	18.29	0.063	1.60	2.750	69.85	1.321	33.55	0.702	17.83	14.00	62.28	9.80	1.72	C0720-063-2750-S	1.534	38.97	9.92	44.15	8.16	1.43
C0720-063-3000-M	0.720	18.29	0.063	1.60	3.000	76.20	1.427	36.25	0.751	19.08	14.00	62.28	8.90	1.56	C0720-063-3000-S	1.661	42.20	9.92	44.15	7.41	1.30
C0720-065-0750-M	0.720	18.29	0.065	1.65	0.750	19.05	0.411	10.44	0.324	8.23	15.57	69.26	46.00	8.05	C0720-065-0750-S	0.466	11.84	10.88	48.41	38.32	6.71
C0720-065-0880-M	0.720	18.29	0.065	1.65	0.880	22.35	0.470	11.94	0.351	8.92	15.57	69.26	38.00	6.65	C0720-065-0880-S	0.536	13.62	10.88	48.41	31.65	5.54
C0720-065-1000-M	0.720	18.29	0.065	1.65	1.000	25.40	0.525	13.34	0.376	9.55	15.57	69.26	32.80	5.74	C0720-065-1000-S	0.602	15.28	10.88	48.41	27.32	4.78
C0720-065-1250-M	0.720	18.29	0.065	1.65	1.250	31.75	0.638	16.21	0.428	10.87	15.57	69.26	25.40	4.45	C0720-065-1250-S	0.736	18.68	10.88	48.41	21.16	3.70
C0720-065-1500-M	0.720	18.29	0.065	1.65	1.500	38.10	0.752	19.10	0.480	12.19	15.57	69.26	20.80	3.64	C0720-065-1500-S	0.872	22.14	10.88	48.41	17.33	3.03
C0720-065-1750-M	0.720	18.29	0.065	1.65	1.750	44.45	0.865	21.97	0.532	13.51	15.57	69.26	17.60	3.08	C0720-065-1750-S	1.008	25.59	10.88	48.41	14.66	2.57
C0720-065-2000-M	0.720	18.29	0.065	1.65	2.000	50.80	0.978	24.84	0.584	14.83	15.57	69.26	15.20	2.66	C0720-065-2000-S	1.140	28.97	10.88	48.41	12.66	2.22
C0720-065-2250-M	0.720	18.29	0.065	1.65	2.250	57.15	1.092	27.74	0.636	16.15	15.57	69.26	13.40	2.35	C0720-065-2250-S	1.275	32.38	10.88	48.41	11.16	1.95
C0720-065-2500-M	0.720	18.29	0.065	1.65	2.500	63.50	1.205	30.61	0.689	17.50	15.57	69.26	12.00	2.10	C0720-065-2500-S	1.411	35.84	10.88	48.41	10.00	1.75
C0720-065-2750-M	0.720	18.29	0.065	1.65	2.750	69.85	1.319	33.50	0.714	18.14	15.57	69.26	10.90	1.91	C0720-065-2750-S	1.551	39.40	10.88	48.41	9.08	1.59
C0720-065-3000-M	0.720	18.29	0.065	1.65	3.000	76.20	1.432	36.37	0.793	20.14	15.57	69.26	9.90	1.73	C0720-065-3000-S	1.680	42.68	10.88	48.41	8.25	1.44
C0720-067-0750-M	0.720	18.29	0.067	1.70	0.750	19.05	0.390	9.91	0.279	7.09	18.00	80.07	50.00	8.75	C0720-067-0750-S	0.464	11.79	11.90	52.94	41.65	7.29
C0720-067-0880-M	0.720	18.29	0.067	1.70	0.880	22.35	0.430	10.92	0.315	8.00	18.00	80.07	40.00	7.00	C0720-067-0880-S	0.523	13.28	11.90	52.94	33.32	5.83
C0720-067-1000-M	0.720	18.29	0.067	1.70	1.000	25.40	0.450	11.43	0.354	8.99	18.00	80.07	33.00	5.78	C0720-067-1000-S	0.567	14.40	11.90	52.94	27.49	4.81
C0720-067-1250-M	0.720	18.29	0.067	1.70	1.250	31.75	0.580	14.73	0.403	10.24	18.00	80.07	27.00	4.73	C0720-067-1250-S	0.721	18.31	11.90	52.94	22.49	3.94
C0720-067-1500-M	0.720	18.29	0.067	1.70	1.500	38.10	0.680	17.27	0.464	11.79	18.00	80.07	22.00	3.85	C0720-067-1500-S	0.851	21.60	11.90	52.94	18.33	3.21
C0720-067-1750-M	0.720	18.29	0.067	1.70	1.750	44.45	0.750	19.05	0.538	13.67	18.00	80.07	18.00	3.15	C0720-067-1750-S	0.956	24.29	11.90	52.94	14.99	2.62
C0720-067-2000-M	0.720	18.29	0.067	1.70	2.000	50.80	0.850	21.59	0.603	15.32	18.00	80.07	15.50	2.71	C0720-067-2000-S	1.078	27.39	11.90	52.94	12.91	2.26
C0720-067-2250-M	0.720	18.29	0.067	1.70	2.250	57.15	1.042	26.47	0.669	16.99	18.00	80.07	14.90	2.61	C0720-067-2250-S	1.291	32.79	11.90	52.94	12.41	2.17
C0720-067-2500-M	0.720	18.29	0.067	1.70	2.500	63.50	1.147	29.13	0.724	18.39	18.00	80.07	13.30	2.33	C0720-067-2500-S	1.426	36.21	11.90	52.94	11.08	1.94
C0720-067-3000-M	0.720	18.29	0.067	1.70	3.000	76.20	1.364	34.65	0.835	21.21	18.00	80.07	11.00	1.93	C0720-067-3000-S	1.701	43.21	11.90	52.94	9.16	1.60
C0720-067-3250-M	0.720	18.29	0.067	1.70	3.250	82.55	1.575	40.01	0.850	21.59	18.00	80.07	10.70	1.87	C0720-067-3250-S	1.915	48.63	11.90	52.94	8.91	1.56
C0720-067-3500-M	0.720	18.29	0.067	1.70	3.500	88.90	1.691	42.95	0.902	22.91	18.00	80.07	10.00	1.75	C0720-067-3500-S	2.071	52.61	11.90	52.94	8.33	1.46
C0720-072-0750-M	0.720	18.29	0.072	1.83	0.750	19.05	0.438	11.13	0.368	9.35	21.00	93.41	67.30	11.78	C0720-072-0750-S	0.490	12.44	14.60	64.94	56.06	9.81
C0720-072-0880-M	0.720	18.29	0.072	1.83	0.880	22.35	0.443	11.25	0.365	9.27	21.00	93.41	48.00	8.40	C0720-072-0880-S	0.515	13.08	14.60	64.94	39.98	7.00
C0720-072-1000-M	0.720	18.29	0.072	1.83	1.000	25.40	0.500	12.70	0.397	10.08	21.00	93.41	42.00	7.35	C0720-072-1000-S	0.583	14.80	14.60	64.94	34.99	6.12
C0720-072-1250-M	0.720	18.29	0.072	1.83	1.250	31.75	0.650	16.51	0.448	11.38	21.00	93.41	35.00	6.13	C0720-072-1250-S	0.749	19.03	14.60	64.94	29.16	5.10
C0720-072-1500-M	0.720	18.29	0.072	1.83	1.500	38.10	0.700	17.78	0.554	14.07	21.00	93.41	26.00	4.55	C0720-072-1500-S	0.826	20.98	14.60	64.94	21.66	3.79
C0720-072-1750-M	0.720	18.29	0.072	1.83	1.750	44.45	0.795	20.19	0.628	15.95	21.00	93.41	22.00	3.85	C0720-072-1750-S	0.953	24.22	14.60	64.94	18.33	3.21
C0720-072-2000-M	0.720	18.29	0.072	1.83	2.000	50.80	0.950	24.13	0.677	17.20	21.00	93.41	20.00	3.50	C0720-072-2000-S	1.124	28.54	14.60	64.94	16.66	2.92
C0720-072-2250-M	0.720	18.29	0.072	1.83	2.250	57.15	1.151	29.24	0.751	19.08	21.00	93.41	19.10	3.34	C0720-072-2250-S	1.332	33.84	14.60	64.94	15.91	2.78
C0720-072-2500-M	0.720	18.29	0.072	1.83	2.500	63.50	1.275	32.39	0.815	20.70	21.00	93.41	17.10	2.99	C0720-072-2500-S	1.475	37.47	14.60	64.94	14.24	2.49
C0720-072-2750-M	0.720	18.29	0.072	1.83	2.750	69.85	1.386	35.20	0.878	22.30	21.00	93.41	15.40	2.70	C0720-072-2750-S	1.612	40.94	14.60	64.94	12.83	2.24
C0720-072-3000-M	0.720	18.29	0.072	1.83	3.000	76.20	1.511	38.38	0.942	23.93	21.00	93.41	14.10	2.47	C0720-072-3000-S	1.757	44.63	14.60	64.94	11.75	2.06
C0720-072-3250-M	0.720	18.29	0.072	1.83	3.250	82.55	1.629	41.38	1.005	25.53	21.00	93.41	13.00	2.28	C0720-072-3250-S	1.902	48.31	14.60	64.94	10.83	1.90
C0720-072-3500-M	0.720	18.29	0.072	1.83	3.500	88.90	1.749	44.42	1.069	27.15	21.00	93.41	12.00	2.10	C0720-072-3500-S	2.040	51.81	14.60	64.94	10.00	1.75
C0720-072-4000-M	0.720	18.29	0.072	1.83	4.000	101.60	2.015	51.18	1.182	30.02	21.00	93.41	10.60	1.86	C0720-072-4000-S	2.347	59.61	14.60	64.94	8.83	1.55
C0720-081-0750-M	0.720	18.29	0.081	2.06	0.750	19.05	0.472	11.99	0.429	10.90	28.72	127.75	103.50	18.11	C0720-081-0750-S	0.518	13.16	19.98	88.87	86.22	15.09
C0720-081-0880-M	0.720	18.29	0.081	2.06	0.880	22.35	0.541	13.74	0.470	11.94	28.72	127.75	84.70	14.82	C0720-081-0880-S	0.597	15.16	19.98	88.87	70.56	12.35
C0720-081-1000-M	0.720	18.29	0.081	2.06	1.000	25.40	0.604	15.34	0.508	12.90	28.72	127.75	72.60	12.71	C0720-081-1000-S	0.670	17.01	19.98	88.87	60.48	10.58
C0720-081-1250-M	0.720	18.29	0.081	2.06	1.250	31.75	0.736	18.69	0.587	14.91	28.72	127.75	55.90	9.78	C0720-081-1250-S	0.821	20.85	19.98	88.87	46.57	8.15

Part Numbers with an "*" are squared and not ground. **Part Numbers in bold** represent the newly expanded Associated Spring RAYMOND compression spring offering.

| MUSIC WIRE | | |

MUSIC WIRE																STAINLESS STEEL						
Catalog #	Outside Diameter (OD)		Wire Diameter (d)		Free Length (L) Approx		Load Length (L_1)		Solid Height (Sh) Approx		Load (P) at L_1		Spring Rate (R)		Catalog #	Load Length (L_1)		Load (P) at L_1		Spring Rate (R)	
	in	mm	in	mm	in	mm	in	mm	in	mm	lb	N	lb/in	N/mm		in	mm	lb	N	lb/in	N/mm
D13020	0.728	18.50	0.098	2.50	3.465	88.00	1.618	41.10	1.427	36.25	82.01	364.81	44.46	7.78	D23020	1.618	41.10	68.32	303.89	37.03	6.48
D13030	0.728	18.50	0.098	2.50	5.118	130.00	2.319	58.90	2.018	51.25	82.01	364.81	30.00	5.25	D23030	2.319	58.90	68.32	303.89	24.97	4.37
D13280	0.756	19.20	0.126	3.20	1.083	27.50	0.701	17.80	0.693	17.60	162.04	720.79	424.74	74.33	D23280	0.701	17.80	135.03	600.66	353.83	61.92
D13290	0.756	19.20	0.126	3.20	1.575	40.00	0.980	24.90	0.945	24.00	162.04	720.79	270.69	47.37	D23290	0.980	24.90	135.03	600.66	225.49	39.46
D13300	0.756	19.20	0.126	3.20	2.323	59.00	1.394	35.40	1.323	33.60	162.04	720.79	175.37	30.69	D23300	1.394	35.40	135.03	600.66	146.06	25.56
D13310	0.756	19.20	0.126	3.20	3.287	83.50	1.929	49.00	1.827	46.40	162.04	720.79	118.80	20.79	D23310	1.929	49.00	135.03	600.66	98.97	17.32
D13320	0.756	19.20	0.126	3.20	4.724	120.00	2.732	69.40	2.583	65.60	162.04	720.79	80.69	14.12	D23320	2.732	69.40	135.03	600.66	67.20	11.76
C0764-059-1500-M	**0.764**	**19.41**	**0.059**	**1.50**	**1.500**	**38.10**	**0.533**	**13.54**	**0.381**	**9.67**	**11.59**	**51.55**	**11.99**	**2.10**	**C0764-059-1500-S**	**0.617**	**15.67**	**9.21**	**40.95**	**10.43**	**1.82**
C0764-059-1625-M	**0.764**	**19.41**	**0.059**	**1.50**	**1.625**	**41.28**	**0.571**	**14.50**	**0.404**	**10.26**	**11.59**	**51.55**	**10.99**	**1.92**	**C0764-059-1625-S**	**0.662**	**16.81**	**9.21**	**40.95**	**9.56**	**1.67**
C0764-059-1750-M	**0.764**	**19.41**	**0.059**	**1.50**	**1.750**	**44.45**	**0.608**	**15.45**	**0.427**	**10.85**	**11.59**	**51.55**	**10.15**	**1.78**	**C0764-059-1750-S**	**0.707**	**17.96**	**9.21**	**40.95**	**8.83**	**1.54**
C0764-059-1875-M	**0.764**	**19.41**	**0.059**	**1.50**	**1.875**	**47.63**	**0.646**	**16.41**	**0.450**	**11.44**	**11.59**	**51.55**	**9.43**	**1.65**	**C0764-059-1875-S**	**0.752**	**19.11**	**9.21**	**40.95**	**8.20**	**1.44**
C0764-059-2000-M	**0.764**	**19.41**	**0.059**	**1.50**	**2.000**	**50.80**	**0.683**	**17.36**	**0.474**	**12.03**	**11.59**	**51.55**	**8.80**	**1.54**	**C0764-059-2000-S**	**0.797**	**20.25**	**9.21**	**40.95**	**7.66**	**1.34**
C0764-059-2125-M	**0.764**	**19.41**	**0.059**	**1.50**	**2.125**	**53.98**	**0.721**	**18.31**	**0.497**	**12.62**	**11.59**	**51.55**	**8.26**	**1.44**	**C0764-059-2125-S**	**0.842**	**21.40**	**9.21**	**40.95**	**7.18**	**1.26**
C0764-059-2250-M	**0.764**	**19.41**	**0.059**	**1.50**	**2.250**	**57.15**	**0.759**	**19.27**	**0.520**	**13.21**	**11.59**	**51.55**	**7.77**	**1.36**	**C0764-059-2250-S**	**0.888**	**22.54**	**9.21**	**40.95**	**6.76**	**1.18**
C0764-059-2375-M	**0.764**	**19.41**	**0.059**	**1.50**	**2.375**	**60.33**	**0.796**	**20.22**	**0.543**	**13.80**	**11.59**	**51.55**	**7.34**	**1.28**	**C0764-059-2375-S**	**0.933**	**23.69**	**9.21**	**40.95**	**6.38**	**1.12**
C0764-059-2500-M	**0.764**	**19.41**	**0.059**	**1.50**	**2.500**	**63.50**	**0.834**	**21.18**	**0.567**	**14.39**	**11.59**	**51.55**	**6.96**	**1.22**	**C0764-059-2500-S**	**0.978**	**24.84**	**9.21**	**40.95**	**6.05**	**1.06**
C0764-059-2625-M	**0.764**	**19.41**	**0.059**	**1.50**	**2.625**	**66.68**	**0.871**	**22.13**	**0.590**	**14.98**	**11.59**	**51.55**	**6.61**	**1.16**	**C0764-059-2625-S**	**1.023**	**25.98**	**9.21**	**40.95**	**5.75**	**1.01**
C0764-059-2750-M	**0.764**	**19.41**	**0.059**	**1.50**	**2.750**	**69.85**	**0.909**	**23.08**	**0.613**	**15.57**	**11.59**	**51.55**	**6.30**	**1.10**	**C0764-059-2750-S**	**1.068**	**27.13**	**9.21**	**40.95**	**5.47**	**0.96**
C0764-059-2875-M	**0.764**	**19.41**	**0.059**	**1.50**	**2.875**	**73.03**	**0.946**	**24.04**	**0.636**	**16.16**	**11.59**	**51.55**	**6.01**	**1.05**	**C0764-059-2875-S**	**1.113**	**28.27**	**9.21**	**40.95**	**5.23**	**0.91**
C0764-059-3000-M	**0.764**	**19.41**	**0.059**	**1.50**	**3.000**	**76.20**	**0.984**	**24.99**	**0.660**	**16.75**	**11.59**	**51.55**	**5.75**	**1.01**	**C0764-059-3000-S**	**1.158**	**29.42**	**9.21**	**40.95**	**5.00**	**0.87**
C0764-059-3250-M	**0.764**	**19.41**	**0.059**	**1.50**	**3.250**	**82.55**	**1.059**	**26.90**	**0.706**	**17.93**	**11.59**	**51.55**	**5.29**	**0.93**	**C0764-059-3250-S**	**1.248**	**31.71**	**9.21**	**40.95**	**4.60**	**0.81**
C0764-059-3500-M	**0.764**	**19.41**	**0.059**	**1.50**	**3.500**	**88.90**	**1.134**	**28.81**	**0.753**	**19.11**	**11.59**	**51.55**	**4.90**	**0.86**	**C0764-059-3500-S**	**1.339**	**34.00**	**9.21**	**40.95**	**4.26**	**0.75**
C0764-059-3750-M	**0.764**	**19.41**	**0.059**	**1.50**	**3.750**	**95.25**	**1.209**	**30.72**	**0.799**	**20.29**	**11.59**	**51.55**	**4.56**	**0.80**	**C0764-059-3750-S**	**1.429**	**36.30**	**9.21**	**40.95**	**3.97**	**0.69**
C0764-059-4000-M	**0.764**	**19.41**	**0.059**	**1.50**	**4.000**	**101.60**	**1.284**	**32.62**	**0.845**	**21.47**	**11.59**	**51.55**	**4.27**	**0.75**	**C0764-059-4000-S**	**1.519**	**38.59**	**9.21**	**40.95**	**3.71**	**0.65**
C0764-059-4250-M	**0.764**	**19.41**	**0.059**	**1.50**	**4.250**	**107.95**	**1.360**	**34.53**	**0.892**	**22.66**	**11.59**	**51.55**	**4.01**	**0.70**	**C0764-059-4250-S**	**1.609**	**40.88**	**9.21**	**40.95**	**3.49**	**0.61**
C0764-059-4500-M	**0.764**	**19.41**	**0.059**	**1.50**	**4.500**	**114.30**	**1.435**	**36.44**	**0.938**	**23.84**	**11.59**	**51.55**	**3.78**	**0.66**	**C0764-059-4500-S**	**1.700**	**43.17**	**9.21**	**40.95**	**3.29**	**0.58**
C0764-059-4750-M	**0.764**	**19.41**	**0.059**	**1.50**	**4.750**	**120.65**	**1.510**	**38.35**	**0.985**	**25.02**	**11.59**	**51.55**	**3.58**	**0.63**	**C0764-059-4750-S**	**1.790**	**45.46**	**9.21**	**40.95**	**3.11**	**0.54**
C0764-059-5000-M	**0.764**	**19.41**	**0.059**	**1.50**	**5.000**	**127.00**	**1.585**	**40.26**	**1.031**	**26.20**	**11.59**	**51.55**	**3.39**	**0.59**	**C0764-059-5000-S**	**1.880**	**47.76**	**9.21**	**40.95**	**2.95**	**0.52**
C0764-059-5250-M	**0.764**	**19.41**	**0.059**	**1.50**	**5.250**	**133.35**	**1.660**	**42.16**	**1.078**	**27.38**	**11.59**	**51.55**	**3.23**	**0.56**	**C0764-059-5250-S**	**1.970**	**50.05**	**9.21**	**40.95**	**2.81**	**0.49**
C0764-059-5500-M	**0.764**	**19.41**	**0.059**	**1.50**	**5.500**	**139.70**	**1.735**	**44.07**	**1.124**	**28.56**	**11.59**	**51.55**	**3.08**	**0.54**	**C0764-059-5500-S**	**2.061**	**52.34**	**9.21**	**40.95**	**2.68**	**0.47**
C0764-059-5750-M	**0.764**	**19.41**	**0.059**	**1.50**	**5.750**	**146.05**	**1.810**	**45.98**	**1.171**	**29.74**	**11.59**	**51.55**	**2.94**	**0.51**	**C0764-059-5750-S**	**2.151**	**54.63**	**9.21**	**40.95**	**2.56**	**0.45**
C0764-059-6000-M	**0.764**	**19.41**	**0.059**	**1.50**	**6.000**	**152.40**	**1.885**	**47.89**	**1.217**	**30.92**	**11.59**	**51.55**	**2.82**	**0.49**	**C0764-059-6000-S**	**2.241**	**56.92**	**9.21**	**40.95**	**2.45**	**0.43**
C0764-059-6250-M	**0.764**	**19.41**	**0.059**	**1.50**	**6.250**	**158.75**	**1.960**	**49.80**	**1.264**	**32.10**	**11.59**	**51.55**	**2.70**	**0.47**	**C0764-059-6250-S**	**2.331**	**59.22**	**9.21**	**40.95**	**2.35**	**0.41**
C0764-059-6500-M	**0.764**	**19.41**	**0.059**	**1.50**	**6.500**	**165.10**	**2.036**	**51.70**	**1.310**	**33.28**	**11.59**	**51.55**	**2.60**	**0.45**	**C0764-059-6500-S**	**2.422**	**61.51**	**9.21**	**40.95**	**2.26**	**0.39**
C0764-059-6750-M	**0.764**	**19.41**	**0.059**	**1.50**	**6.750**	**171.45**	**2.111**	**53.61**	**1.357**	**34.46**	**11.59**	**51.55**	**2.50**	**0.44**	**C0764-059-6750-S**	**2.512**	**63.80**	**9.21**	**40.95**	**2.17**	**0.38**
C0764-059-7000-M	**0.764**	**19.41**	**0.059**	**1.50**	**7.000**	**177.80**	**2.186**	**55.52**	**1.403**	**35.64**	**11.59**	**51.55**	**2.41**	**0.42**	**C0764-059-7000-S**	**2.602**	**66.09**	**9.21**	**40.95**	**2.09**	**0.37**
C0764-059-7500-M	**0.764**	**19.41**	**0.059**	**1.50**	**7.500**	**190.50**	**2.336**	**59.34**	**1.496**	**38.00**	**11.59**	**51.55**	**2.24**	**0.39**	**C0764-059-7500-S**	**2.782**	**70.67**	**9.21**	**40.95**	**1.95**	**0.34**
C0764-059-8000-M	**0.764**	**19.41**	**0.059**	**1.50**	**8.000**	**203.20**	**2.486**	**63.15**	**1.589**	**40.36**	**11.59**	**51.55**	**2.10**	**0.37**	**C0764-059-8000-S**	**2.963**	**75.26**	**9.21**	**40.95**	**1.83**	**0.32**
C0764-059-8500-M	**0.764**	**19.41**	**0.059**	**1.50**	**8.500**	**215.90**	**2.637**	**66.97**	**1.682**	**42.72**	**11.59**	**51.55**	**1.98**	**0.35**	**C0764-059-8500-S**	**3.143**	**79.84**	**9.21**	**40.95**	**1.72**	**0.30**
C0764-059-9000-M	**0.764**	**19.41**	**0.059**	**1.50**	**9.000**	**228.60**	**2.787**	**70.78**	**1.775**	**45.08**	**11.59**	**51.55**	**1.87**	**0.33**	**C0764-059-9000-S**	**3.324**	**84.43**	**9.21**	**40.95**	**1.62**	**0.28**
C0764-059-9500-M	**0.764**	**19.41**	**0.059**	**1.50**	**9.500**	**241.30**	**2.937**	**74.60**	**1.868**	**47.44**	**11.59**	**51.55**	**1.77**	**0.31**	**C0764-059-9500-S**	**3.504**	**89.01**	**9.21**	**40.95**	**1.54**	**0.27**
C0764-063-1375-M	**0.764**	**19.41**	**0.063**	**1.60**	**1.375**	**34.93**	**0.528**	**13.40**	**0.397**	**10.09**	**13.92**	**61.91**	**16.43**	**2.87**	**C0764-063-1375-S**	**0.602**	**15.29**	**11.04**	**49.12**	**14.28**	**2.50**
C0764-063-1500-M	**0.764**	**19.41**	**0.063**	**1.60**	**1.500**	**38.10**	**0.568**	**14.42**	**0.424**	**10.76**	**13.92**	**61.91**	**14.93**	**2.61**	**C0764-063-1500-S**	**0.650**	**16.50**	**11.04**	**49.12**	**12.98**	**2.27**
C0764-063-1625-M	**0.764**	**19.41**	**0.063**	**1.60**	**1.625**	**41.28**	**0.608**	**15.44**	**0.450**	**11.43**	**13.92**	**61.91**	**13.69**	**2.40**	**C0764-063-1625-S**	**0.697**	**17.71**	**11.04**	**49.12**	**11.90**	**2.08**
C0764-063-1750-M	**0.764**	**19.41**	**0.063**	**1.60**	**1.750**	**44.45**	**0.648**	**16.47**	**0.477**	**12.10**	**13.92**	**61.91**	**12.63**	**2.21**	**C0764-063-1750-S**	**0.745**	**18.92**	**11.04**	**49.12**	**10.99**	**1.92**
C0764-063-1875-M	**0.764**	**19.41**	**0.063**	**1.60**	**1.875**	**47.63**	**0.688**	**17.49**	**0.503**	**12.78**	**13.92**	**61.91**	**11.73**	**2.05**	**C0764-063-1875-S**	**0.792**	**20.13**	**11.04**	**49.12**	**10.20**	**1.79**
C0764-063-2000-M	**0.764**	**19.41**	**0.063**	**1.60**	**2.000**	**50.80**	**0.729**	**18.51**	**0.530**	**13.45**	**13.92**	**61.91**	**10.95**	**1.92**	**C0764-063-2000-S**	**0.840**	**21.34**	**11.04**	**49.12**	**9.52**	**1.67**
C0764-063-2125-M	**0.764**	**19.41**	**0.063**	**1.60**	**2.125**	**53.98**	**0.769**	**19.53**	**0.556**	**14.12**	**13.92**	**61.91**	**10.26**	**1.80**	**C0764-063-2125-S**	**0.888**	**22.55**	**11.04**	**49.12**	**8.92**	**1.56**
C0764-063-2250-M	**0.764**	**19.41**	**0.063**	**1.60**	**2.250**	**57.15**	**0.809**	**20.55**	**0.583**	**14.80**	**13.92**	**61.91**	**9.66**	**1.69**	**C0764-063-2250-S**	**0.935**	**23.76**	**11.04**	**49.12**	**8.40**	**1.47**
C0764-063-2375-M	**0.764**	**19.41**	**0.063**	**1.60**	**2.375**	**60.33**	**0.849**	**21.57**	**0.609**	**15.47**	**13.92**	**61.91**	**9.12**	**1.60**	**C0764-063-2375-S**	**0.983**	**24.97**	**11.04**	**49.12**	**7.93**	**1.39**
C0764-063-2500-M	**0.764**	**19.41**	**0.063**	**1.60**	**2.500**	**63.50**	**0.889**	**22.59**	**0.636**	**16.14**	**13.92**	**61.91**	**8.64**	**1.51**	**C0764-063-2500-S**	**1.031**	**26.18**	**11.04**	**49.12**	**7.51**	**1.31**
C0764-063-2625-M	**0.764**	**19.41**	**0.063**	**1.60**	**2.625**	**66.68**	**0.930**	**23.61**	**0.662**	**16.82**	**13.92**	**61.91**	**8.21**	**1.44**	**C0764-063-2625-S**	**1.078**	**27.39**	**11.04**	**49.12**	**7.14**	**1.25**
C0764-063-2750-M	**0.764**	**19.41**	**0.063**	**1.60**	**2.750**	**69.85**	**0.970**	**24.63**	**0.689**	**17.49**	**13.92**	**61.91**	**7.82**	**1.37**	**C0764-063-2750-S**	**1.126**	**28.60**	**11.04**	**49.12**	**6.80**	**1.19**
C0764-063-2875-M	**0.764**	**19.41**	**0.063**	**1.60**	**2.875**	**73.03**	**1.010**	**25.66**	**0.715**	**18.16**	**13.92**	**61.91**	**7.46**	**1.31**	**C0764-063-2875-S**	**1.173**	**29.81**	**11.04**	**49.12**	**6.49**	**1.14**
C0764-063-3000-M	**0.764**	**19.41**	**0.063**	**1.60**	**3.000**	**76.20**	**1.050**	**26.68**	**0.742**	**18.83**	**13.92**	**61.91**	**7.14**	**1.25**	**C0764-063-3000-S**	**1.221**	**31.02**	**11.04**	**49.12**	**6.21**	**1.09**
C0764-063-3250-M	**0.764**	**19.41**	**0.063**	**1.60**	**3.250**	**82.55**	**1.131**	**28.72**	**0.794**	**20.18**	**13.92**	**61.91**	**6.57**	**1.15**	**C0764-063-3250-S**	**1.316**	**33.44**	**11.04**	**49.12**	**5.71**	**1.00**
C0764-063-3500-M	**0.764**	**19.41**	**0.063**	**1.60**	**3.500**	**88.90**	**1.211**	**30.76**	**0.847**	**21.53**	**13.92**	**61.91**	**6.08**	**1.06**	**C0764-063-3500-S**	**1.412**	**35.86**	**11.04**	**49.12**	**5.29**	**0.93**
C0764-063-3750-M	**0.764**	**19.41**	**0.063**	**1.60**	**3.750**	**95.25**	**1.291**	**32.80**	**0.900**	**22.87**	**13.92**	**61.91**	**5.66**	**0.99**	**C0764-063-3750-S**	**1.507**	**38.28**	**11.04**	**49.12**	**4.92**	**0.86**
C0764-063-4000-M	**0.764**	**19.41**	**0.063**	**1.60**	**4.000**	**101.60**	**1.372**	**34.85**	**0.953**	**24.22**	**13.92**	**61.91**	**5.30**	**0.93**	**C0764-063-4000-S**	**1.602**	**40.69**	**11.04**	**49.12**	**4.61**	**0.81**
C0764-063-4250-M	**0.764**	**19.41**	**0.063**	**1.60**	**4.250**	**107.95**	**1.452**	**36.89**	**1.006**	**25.56**	**13.92**	**61.91**	**4.98**	**0.87**	**C0764-063-4250-S**	**1.697**	**43.11**	**11.04**	**49.12**	**4.33**	**0.76**
C0764-063-4500-M	**0.764**	**19.41**	**0.063**	**1.60**	**4.500**	**114.30**	**1.533**	**38.93**	**1.059**	**26.91**	**13.92**	**61.91**	**4.69**	**0.82**	**C0764-063-4500-S**	**1.793**	**45.53**	**11.04**	**49.12**	**4.08**	**0.71**
C0764-063-4750-M	**0.764**	**19.41**	**0.063**	**1.60**	**4.750**	**120.65**	**1.613**	**40.97**	**1.112**	**28.26**	**13.92**	**61.91**	**4.44**	**0.78**	**C0764-063-4750-S**	**1.888**	**47.95**	**11.04**	**49.12**	**3.86**	**0.68**
C0764-063-5000-M	**0.764**	**19.41**	**0.063**	**1.60**	**5.000**	**127.00**	**1.693**	**43.01**	**1.165**	**29.60**	**13.92**	**61.91**	**4.21**	**0.74**	**C0764-063-5000-S**	**1.983**	**50.37**	**11.04**	**49.12**	**3.66**	**0.64**
C0764-063-5250-M	**0.764**	**19.41**	**0.063**	**1.60**	**5.250**	**133.35**	**1.774**	**45.06**	**1.218**	**30.95**	**13.92**	**61.91**	**4.00**	**0.70**	**C0764-063-5250-S**	**2.078**	**52.79**	**11.04**	**49.12**	**3.48**	**0.61**

Part Numbers with an "*" are squared and not ground. **Part Numbers in bold** represent the newly expanded Associated Spring RAYMOND compression spring offering.

MUSIC WIRE															STAINLESS STEEL						
Catalog #	Outside Diameter (OD)		Wire Diameter (d)		Free Length (L) Approx		Load Length (L_1)		Solid Height (Sh) Approx		Load (P) at L_1		Spring Rate (R)		Catalog #	Load Length (L_1)		Load (P) at L_1		Spring Rate (R)	
	in	mm	in	mm	in	mm	in	mm	in	mm	lb	N	lb/in	N/mm		in	mm	lb	N	lb/in	N/mm
C0764-063-5500-M	0.764	19.41	0.063	1.60	5.500	139.70	1.854	47.10	1.271	32.29	13.92	61.91	3.82	0.67	**C0764-063-5500-S**	2.174	55.21	11.04	49.12	3.32	0.58
C0764-063-5750-M	0.764	19.41	0.063	1.60	5.750	146.05	1.935	49.14	1.324	33.64	13.92	61.91	3.65	0.64	**C0764-063-5750-S**	2.269	57.63	11.04	49.12	3.17	0.56
C0764-063-6000-M	0.764	19.41	0.063	1.60	6.000	152.40	2.015	51.18	1.377	34.99	13.92	61.91	3.49	0.61	**C0764-063-6000-S**	2.364	60.05	11.04	49.12	3.04	0.53
C0764-063-6250-M	0.764	19.41	0.063	1.60	6.250	158.75	2.095	53.22	1.430	36.33	13.92	61.91	3.35	0.59	**C0764-063-6250-S**	2.460	62.47	11.04	49.12	2.91	0.51
C0764-063-6500-M	0.764	19.41	0.063	1.60	6.500	165.10	2.176	55.27	1.483	37.68	13.92	61.91	3.22	0.56	**C0764-063-6500-S**	2.555	64.89	11.04	49.12	2.80	0.49
C0764-063-6750-M	0.764	19.41	0.063	1.60	6.750	171.45	2.256	57.31	1.536	39.02	13.92	61.91	3.10	0.54	**C0764-063-6750-S**	2.650	67.31	11.04	49.12	2.69	0.47
C0764-063-7000-M	0.764	19.41	0.063	1.60	7.000	177.80	2.337	59.35	1.589	40.37	13.92	61.91	2.98	0.52	**C0764-063-7000-S**	2.745	69.73	11.04	49.12	2.60	0.45
C0764-063-7500-M	0.764	19.41	0.063	1.60	7.500	190.50	2.497	63.43	1.695	43.06	13.92	61.91	2.78	0.49	**C0764-063-7500-S**	2.936	74.57	11.04	49.12	2.42	0.42
C0764-063-8000-M	0.764	19.41	0.063	1.60	8.000	203.20	2.658	67.52	1.801	45.75	13.92	61.91	2.61	0.46	**C0764-063-8000-S**	3.126	79.41	11.04	49.12	2.27	0.40
C0764-063-8500-M	0.764	19.41	0.063	1.60	8.500	215.90	2.819	71.60	1.907	48.45	13.92	61.91	2.45	0.43	**C0764-063-8500-S**	3.317	84.25	11.04	49.12	2.13	0.37
C0764-063-9000-M	0.764	19.41	0.063	1.60	9.000	228.60	2.980	75.69	2.013	51.14	13.92	61.91	2.31	0.40	**C0764-063-9000-S**	3.507	89.09	11.04	49.12	2.01	0.35
C0764-063-9500-M	0.764	19.41	0.063	1.60	9.500	241.30	3.141	79.77	2.119	53.83	13.92	61.91	2.19	0.38	**C0764-063-9500-S**	3.698	93.93	11.04	49.12	1.90	0.33
C0764-068-1375-M	0.764	19.41	0.068	1.73	1.375	34.93	0.569	14.44	0.448	11.37	17.22	76.58	21.35	3.74	**C0764-068-1375-S**	0.641	16.28	13.63	60.64	18.57	3.25
C0764-068-1500-M	0.764	19.41	0.068	1.73	1.500	38.10	0.612	15.55	0.478	12.15	17.22	76.58	19.39	3.39	**C0764-068-1500-S**	0.692	17.57	13.63	60.64	16.86	2.95
C0764-068-1625-M	0.764	19.41	0.068	1.73	1.625	41.28	0.656	16.66	0.509	12.93	17.22	76.58	17.77	3.11	**C0764-068-1625-S**	0.743	18.86	13.63	60.64	15.45	2.70
C0764-068-1750-M	0.764	19.41	0.068	1.73	1.750	44.45	0.700	17.77	0.540	13.71	17.22	76.58	16.39	2.87	**C0764-068-1750-S**	0.794	20.16	13.63	60.64	14.25	2.49
C0764-068-1875-M	0.764	19.41	0.068	1.73	1.875	47.63	0.743	18.88	0.571	14.50	17.22	76.58	15.21	2.66	**C0764-068-1875-S**	0.844	21.45	13.63	60.64	13.23	2.31
C0764-068-2000-M	0.764	19.41	0.068	1.73	2.000	50.80	0.787	19.99	0.601	15.28	17.22	76.58	14.19	2.48	**C0764-068-2000-S**	0.895	22.74	13.63	60.64	12.34	2.16
C0764-068-2125-M	0.764	19.41	0.068	1.73	2.125	53.98	0.831	21.10	0.632	16.06	17.22	76.58	13.30	2.33	**C0764-068-2125-S**	0.946	24.04	13.63	60.64	11.57	2.02
C0764-068-2250-M	0.764	19.41	0.068	1.73	2.250	57.15	0.874	22.20	0.663	16.84	17.22	76.58	12.51	2.19	**C0764-068-2250-S**	0.997	25.33	13.63	60.64	10.88	1.90
C0764-068-2375-M	0.764	19.41	0.068	1.73	2.375	60.33	0.918	23.31	0.694	17.62	17.22	76.58	11.82	2.07	**C0764-068-2375-S**	1.048	26.62	13.63	60.64	10.27	1.80
C0764-068-2500-M	0.764	19.41	0.068	1.73	2.500	63.50	0.961	24.42	0.724	18.40	17.22	76.58	11.19	1.96	**C0764-068-2500-S**	1.099	27.92	13.63	60.64	9.73	1.70
C0764-068-2625-M	0.764	19.41	0.068	1.73	2.625	66.68	1.005	25.53	0.755	19.18	17.22	76.58	10.63	1.86	**C0764-068-2625-S**	1.150	29.21	13.63	60.64	9.24	1.62
C0764-068-2750-M	0.764	19.41	0.068	1.73	2.750	69.85	1.049	26.64	0.786	19.96	17.22	76.58	10.12	1.77	**C0764-068-2750-S**	1.201	30.50	13.63	60.64	8.80	1.54
C0764-068-2875-M	0.764	19.41	0.068	1.73	2.875	73.03	1.092	27.75	0.817	20.75	17.22	76.58	9.66	1.69	**C0764-068-2875-S**	1.252	31.80	13.63	60.64	8.40	1.47
C0764-068-3000-M	0.764	19.41	0.068	1.73	3.000	76.20	1.136	28.86	0.848	21.53	17.22	76.58	9.24	1.62	**C0764-068-3000-S**	1.303	33.09	13.63	60.64	8.03	1.41
C0764-068-3250-M	0.764	19.41	0.068	1.73	3.250	82.55	1.223	31.07	0.909	23.09	17.22	76.58	8.50	1.49	**C0764-068-3250-S**	1.405	35.68	13.63	60.64	7.39	1.29
C0764-068-3500-M	0.764	19.41	0.068	1.73	3.500	88.90	1.311	33.29	0.971	24.65	17.22	76.58	7.86	1.38	**C0764-068-3500-S**	1.506	38.26	13.63	60.64	6.84	1.20
C0764-068-3750-M	0.764	19.41	0.068	1.73	3.750	95.25	1.398	35.51	1.032	26.21	17.22	76.58	7.32	1.28	**C0764-068-3750-S**	1.608	40.85	13.63	60.64	6.37	1.11
C0764-068-4000-M	0.764	19.41	0.068	1.73	4.000	101.60	1.485	37.73	1.094	27.78	17.22	76.58	6.85	1.20	**C0764-068-4000-S**	1.710	43.44	13.63	60.64	5.95	1.04
C0764-068-4250-M	0.764	19.41	0.068	1.73	4.250	107.95	1.573	39.94	1.155	29.34	17.22	76.58	6.43	1.13	**C0764-068-4250-S**	1.812	46.02	13.63	60.64	5.59	0.98
C0764-068-4500-M	0.764	19.41	0.068	1.73	4.500	114.30	1.660	42.16	1.217	30.90	17.22	76.58	6.06	1.06	**C0764-068-4500-S**	1.914	48.61	13.63	60.64	5.27	0.92
C0764-068-4750-M	0.764	19.41	0.068	1.73	4.750	120.65	1.747	44.38	1.278	32.46	17.22	76.58	5.73	1.00	**C0764-068-4750-S**	2.016	51.20	13.63	60.64	4.99	0.87
C0764-068-5000-M	0.764	19.41	0.068	1.73	5.000	127.00	1.834	46.60	1.340	34.03	17.22	76.58	5.44	0.95	**C0764-068-5000-S**	2.118	53.79	13.63	60.64	4.73	0.83
C0764-068-5250-M	0.764	19.41	0.068	1.73	5.250	133.35	1.922	48.81	1.401	35.59	17.22	76.58	5.17	0.91	**C0764-068-5250-S**	2.219	56.37	13.63	60.64	4.50	0.79
C0764-068-5500-M	0.764	19.41	0.068	1.73	5.500	139.70	2.009	51.03	1.463	37.15	17.22	76.58	4.93	0.86	**C0764-068-5500-S**	2.321	58.96	13.63	60.64	4.29	0.75
C0764-068-5750-M	0.764	19.41	0.068	1.73	5.750	146.05	2.096	53.25	1.524	38.71	17.22	76.58	4.71	0.82	**C0764-068-5750-S**	2.423	61.55	13.63	60.64	4.10	0.72
C0764-068-6000-M	0.764	19.41	0.068	1.73	6.000	152.40	2.184	55.46	1.586	40.28	17.22	76.58	4.51	0.79	**C0764-068-6000-S**	2.525	64.13	13.63	60.64	3.92	0.69
C0764-068-6250-M	0.764	19.41	0.068	1.73	6.250	158.75	2.271	57.68	1.647	41.84	17.22	76.58	4.33	0.76	**C0764-068-6250-S**	2.627	66.72	13.63	60.64	3.76	0.66
C0764-068-6500-M	0.764	19.41	0.068	1.73	6.500	165.10	2.358	59.90	1.709	43.40	17.22	76.58	4.16	0.73	**C0764-068-6500-S**	2.729	69.31	13.63	60.64	3.62	0.63
C0764-068-6750-M	0.764	19.41	0.068	1.73	6.750	171.45	2.446	62.12	1.770	44.96	17.22	76.58	4.00	0.70	**C0764-068-6750-S**	2.830	71.89	13.63	60.64	3.48	0.61
C0764-068-7000-M	0.764	19.41	0.068	1.73	7.000	177.80	2.533	64.33	1.832	46.53	17.22	76.58	3.85	0.67	**C0764-068-7000-S**	2.932	74.48	13.63	60.64	3.35	0.59
C0764-068-7500-M	0.764	19.41	0.068	1.73	7.500	190.50	2.707	68.77	1.955	49.65	17.22	76.58	3.59	0.63	**C0764-068-7500-S**	3.136	79.65	13.63	60.64	3.12	0.55
C0764-068-8000-M	0.764	19.41	0.068	1.73	8.000	203.20	2.882	73.20	2.078	52.78	17.22	76.58	3.36	0.59	**C0764-068-8000-S**	3.340	84.83	13.63	60.64	2.93	0.51
C0764-068-8500-M	0.764	19.41	0.068	1.73	8.500	215.90	3.057	77.64	2.201	55.90	17.22	76.58	3.16	0.55	**C0764-068-8500-S**	3.543	90.00	13.63	60.64	2.75	0.48
C0764-068-9000-M	0.764	19.41	0.068	1.73	9.000	228.60	3.231	82.07	2.324	59.03	17.22	76.58	2.98	0.52	**C0764-068-9000-S**	3.747	95.18	13.63	60.64	2.60	0.45
C0764-068-9500-M	0.764	19.41	0.068	1.73	9.500	241.30	3.406	86.51	2.447	62.15	17.22	76.58	2.83	0.49	**C0764-068-9500-S**	3.951	100.35	13.63	60.64	2.46	0.43
C0764-072-1250-M	0.764	19.41	0.072	1.83	1.250	31.75	0.555	14.11	0.455	11.54	20.18	89.77	29.06	5.08	**C0764-072-1250-S**	0.619	15.72	15.95	70.95	25.27	4.42
C0764-072-1375-M	0.764	19.41	0.072	1.83	1.375	34.93	0.602	15.29	0.489	12.42	20.18	89.77	26.11	4.57	**C0764-072-1375-S**	0.672	17.08	15.95	70.95	22.70	3.97
C0764-072-1500-M	0.764	19.41	0.072	1.83	1.500	38.10	0.648	16.47	0.523	13.29	20.18	89.77	23.70	4.15	**C0764-072-1500-S**	0.726	18.44	15.95	70.95	20.61	3.61
C0764-072-1625-M	0.764	19.41	0.072	1.83	1.625	41.28	0.695	17.65	0.557	14.16	20.18	89.77	21.70	3.80	**C0764-072-1625-S**	0.780	19.80	15.95	70.95	18.87	3.30
C0764-072-1750-M	0.764	19.41	0.072	1.83	1.750	44.45	0.741	18.83	0.592	15.03	20.18	89.77	20.01	3.50	**C0764-072-1750-S**	0.833	21.17	15.95	70.95	17.40	3.05
C0764-072-1875-M	0.764	19.41	0.072	1.83	1.875	47.63	0.788	20.01	0.626	15.90	20.18	89.77	18.57	3.25	**C0764-072-1875-S**	0.887	22.53	15.95	70.95	16.14	2.83
C0764-072-2000-M	0.764	19.41	0.072	1.83	2.000	50.80	0.834	21.20	0.660	16.77	20.18	89.77	17.32	3.03	**C0764-072-2000-S**	0.941	23.89	15.95	70.95	15.06	2.63
C0764-072-2125-M	0.764	19.41	0.072	1.83	2.125	53.98	0.881	22.38	0.694	17.64	20.18	89.77	16.22	2.84	**C0764-072-2125-S**	0.994	25.25	15.95	70.95	14.11	2.47
C0764-072-2250-M	0.764	19.41	0.072	1.83	2.250	57.15	0.927	23.56	0.729	18.51	20.18	89.77	15.26	2.67	**C0764-072-2250-S**	1.048	26.62	15.95	70.95	13.27	2.32
C0764-072-2375-M	0.764	19.41	0.072	1.83	2.375	60.33	0.974	24.74	0.763	19.38	20.18	89.77	14.40	2.52	**C0764-072-2375-S**	1.102	27.98	15.95	70.95	12.53	2.19
C0764-072-2500-M	0.764	19.41	0.072	1.83	2.500	63.50	1.020	25.92	0.797	20.25	20.18	89.77	13.64	2.39	**C0764-072-2500-S**	1.155	29.34	15.95	70.95	11.86	2.08
C0764-072-2625-M	0.764	19.41	0.072	1.83	2.625	66.68	1.067	27.10	0.832	21.12	20.18	89.77	12.95	2.27	**C0764-072-2625-S**	1.209	30.71	15.95	70.95	11.26	1.97
C0764-072-2750-M	0.764	19.41	0.072	1.83	2.750	69.85	1.113	28.28	0.866	21.99	20.18	89.77	12.33	2.16	**C0764-072-2750-S**	1.263	32.07	15.95	70.95	10.72	1.88
C0764-072-2875-M	0.764	19.41	0.072	1.83	2.875	73.03	1.160	29.46	0.900	22.86	20.18	89.77	11.77	2.06	**C0764-072-2875-S**	1.316	33.43	15.95	70.95	10.23	1.79
C0764-072-3000-M	0.764	19.41	0.072	1.83	3.000	76.20	1.206	30.64	0.934	23.74	20.18	89.77	11.25	1.97	**C0764-072-3000-S**	1.370	34.79	15.95	70.95	9.78	1.71
C0764-072-3250-M	0.764	19.41	0.072	1.83	3.250	82.55	1.299	33.01	1.003	25.48	20.18	89.77	10.35	1.81	**C0764-072-3250-S**	1.477	37.52	15.95	70.95	9.00	1.57
C0764-072-3500-M	0.764	19.41	0.072	1.83	3.500	88.90	1.392	35.37	1.072	27.22	20.18	89.77	9.58	1.68	**C0764-072-3500-S**	1.584	40.24	15.95	70.95	8.33	1.46

FOR INFORMATION ON ALTERNATIVE FINISHES, SEE PAGE 311

Part Numbers with an "*" are squared and not ground. **Part Numbers in bold** represent the newly expanded Associated Spring RAYMOND compression spring offering.

(OD) 0.764 - 0.764

MUSIC WIRE															STAINLESS STEEL						
Catalog #	Outside Diameter (OD)		Wire Diameter (d)		Free Length (L) Approx		Load Length (L_1)		Solid Height (Sh) Approx		Load (P) at L_1		Spring Rate (R)		Catalog #	Load Length (L_1)		Load (P) at L_1		Spring Rate (R)	
	in	mm	in	mm	in	mm	in	mm	in	mm	lb	N	lb/in	N/mm		in	mm	lb	N	lb/in	N/mm
C0764-072-3750-M	0.764	19.41	0.072	1.83	3.750	95.25	1.485	37.73	1.140	28.96	20.18	89.77	8.91	1.56	**C0764-072-3750-S**	1.692	42.97	15.95	70.95	7.75	1.36
C0764-072-4000-M	0.764	19.41	0.072	1.83	4.000	101.60	1.578	40.09	1.209	30.70	20.18	89.77	8.33	1.46	**C0764-072-4000-S**	1.799	45.70	15.95	70.95	7.25	1.27
C0764-072-4250-M	0.764	19.41	0.072	1.83	4.250	107.95	1.671	42.46	1.277	32.44	20.18	89.77	7.83	1.37	**C0764-072-4250-S**	1.906	48.42	15.95	70.95	6.81	1.19
C0764-072-4500-M	0.764	19.41	0.072	1.83	4.500	114.30	1.764	44.82	1.346	34.18	20.18	89.77	7.38	1.29	**C0764-072-4500-S**	2.014	51.15	15.95	70.95	6.42	1.12
C0764-072-4750-M	0.764	19.41	0.072	1.83	4.750	120.65	1.857	47.18	1.414	35.93	20.18	89.77	6.98	1.22	**C0764-072-4750-S**	2.121	53.87	15.95	70.95	6.07	1.06
C0764-072-5000-M	0.764	19.41	0.072	1.83	5.000	127.00	1.951	49.54	1.483	37.67	20.18	89.77	6.62	1.16	**C0764-072-5000-S**	2.228	56.60	15.95	70.95	5.76	1.01
C0764-072-5250-M	0.764	19.41	0.072	1.83	5.250	133.35	2.044	51.91	1.552	39.41	20.18	89.77	6.29	1.10	**C0764-072-5250-S**	2.336	59.32	15.95	70.95	5.47	0.96
C0764-072-5500-M	0.764	19.41	0.072	1.83	5.500	139.70	2.137	54.27	1.620	41.15	20.18	89.77	6.00	1.05	**C0764-072-5500-S**	2.443	62.05	15.95	70.95	5.22	0.91
C0764-072-5750-M	0.764	19.41	0.072	1.83	5.750	146.05	2.230	56.63	1.689	42.89	20.18	89.77	5.73	1.00	**C0764-072-5750-S**	2.550	64.77	15.95	70.95	4.99	0.87
C0764-072-6000-M	0.764	19.41	0.072	1.83	6.000	152.40	2.323	58.99	1.757	44.63	20.18	89.77	5.49	0.96	**C0764-072-6000-S**	2.657	67.50	15.95	70.95	4.77	0.84
C0764-072-6250-M	0.764	19.41	0.072	1.83	6.250	158.75	2.416	61.35	1.826	46.38	20.18	89.77	5.26	0.92	**C0764-072-6250-S**	2.765	70.22	15.95	70.95	4.58	0.80
C0764-072-6500-M	0.764	19.41	0.072	1.83	6.500	165.10	2.509	63.72	1.894	48.12	20.18	89.77	5.06	0.88	**C0764-072-6500-S**	2.872	72.95	15.95	70.95	4.40	0.77
C0764-072-6750-M	0.764	19.41	0.072	1.83	6.750	171.45	2.602	66.08	1.963	49.86	20.18	89.77	4.87	0.85	**C0764-072-6750-S**	2.979	75.68	15.95	70.95	4.23	0.74
C0764-072-7000-M	0.764	19.41	0.072	1.83	7.000	177.80	2.695	68.44	2.031	51.60	20.18	89.77	4.69	0.82	**C0764-072-7000-S**	3.087	78.40	15.95	70.95	4.08	0.71
C0764-072-7500-M	0.764	19.41	0.072	1.83	7.500	190.50	2.881	73.17	2.169	55.08	20.18	89.77	4.37	0.76	**C0764-072-7500-S**	3.301	83.85	15.95	70.95	3.80	0.66
C0764-072-8000-M	0.764	19.41	0.072	1.83	8.000	203.20	3.067	77.89	2.306	58.57	20.18	89.77	4.09	0.72	**C0764-072-8000-S**	3.516	89.30	15.95	70.95	3.56	0.62
C0764-072-8500-M	0.764	19.41	0.072	1.83	8.500	215.90	3.253	82.61	2.443	62.05	20.18	89.77	3.85	0.67	**C0764-072-8500-S**	3.730	94.75	15.95	70.95	3.34	0.59
C0764-072-9000-M	0.764	19.41	0.072	1.83	9.000	228.60	3.439	87.34	2.580	65.53	20.18	89.77	3.63	0.64	**C0764-072-9000-S**	3.945	100.21	15.95	70.95	3.16	0.55
C0764-072-9500-M	0.764	19.41	0.072	1.83	9.500	241.30	3.625	92.06	2.717	69.01	20.18	89.77	3.44	0.60	**C0764-072-9500-S**	4.160	105.66	15.95	70.95	2.99	0.52
C0764-085-1250-M	0.764	19.41	0.085	2.16	1.250	31.75	0.655	16.63	0.577	14.66	31.96	142.17	53.68	9.39	**C0764-085-1250-S**	0.713	18.10	25.08	111.58	46.68	8.17
C0764-085-1375-M	0.764	19.41	0.085	2.16	1.375	34.93	0.711	18.05	0.623	15.83	31.96	142.17	48.11	8.42	**C0764-085-1375-S**	0.775	19.70	25.08	111.58	41.84	7.32
C0764-085-1500-M	0.764	19.41	0.085	2.16	1.500	38.10	0.767	19.48	0.669	17.00	31.96	142.17	43.59	7.63	**C0764-085-1500-S**	0.838	21.29	25.08	111.58	37.91	6.63
C0764-085-1625-M	0.764	19.41	0.085	2.16	1.625	41.28	0.823	20.90	0.715	18.17	31.96	142.17	39.85	6.97	**C0764-085-1625-S**	0.901	22.89	25.08	111.58	34.65	6.06
C0764-085-1750-M	0.764	19.41	0.085	2.16	1.750	44.45	0.879	22.33	0.762	19.34	31.96	142.17	36.69	6.42	**C0764-085-1750-S**	0.964	24.48	25.08	111.58	31.91	5.58
C0764-085-1875-M	0.764	19.41	0.085	2.16	1.875	47.63	0.935	23.75	0.808	20.51	31.96	142.17	34.00	5.95	**C0764-085-1875-S**	1.027	26.08	25.08	111.58	29.57	5.17
C0764-085-2000-M	0.764	19.41	0.085	2.16	2.000	50.80	0.991	25.18	0.854	21.69	31.96	142.17	31.68	5.54	**C0764-085-2000-S**	1.089	27.67	25.08	111.58	27.55	4.82
C0764-085-2125-M	0.764	19.41	0.085	2.16	2.125	53.98	1.047	26.60	0.900	22.86	31.96	142.17	29.66	5.19	**C0764-085-2125-S**	1.152	29.27	25.08	111.58	25.79	4.51
C0764-085-2250-M	0.764	19.41	0.085	2.16	2.250	57.15	1.103	28.02	0.946	24.03	31.96	142.17	27.87	4.88	**C0764-085-2250-S**	1.215	30.86	25.08	111.58	24.24	4.24
C0764-085-2375-M	0.764	19.41	0.085	2.16	2.375	60.33	1.159	29.45	0.992	25.20	31.96	142.17	26.29	4.60	**C0764-085-2375-S**	1.278	32.46	25.08	111.58	22.86	4.00
C0764-085-2500-M	0.764	19.41	0.085	2.16	2.500	63.50	1.216	30.87	1.038	26.37	31.96	142.17	24.88	4.35	**C0764-085-2500-S**	1.341	34.05	25.08	111.58	21.64	3.79
C0764-085-2625-M	0.764	19.41	0.085	2.16	2.625	66.68	1.272	32.30	1.084	27.54	31.96	142.17	23.62	4.13	**C0764-085-2625-S**	1.403	35.65	25.08	111.58	20.54	3.59
C0764-085-2750-M	0.764	19.41	0.085	2.16	2.750	69.85	1.328	33.72	1.131	28.72	31.96	142.17	22.47	3.93	**C0764-085-2750-S**	1.466	37.24	25.08	111.58	19.54	3.42
C0764-085-2875-M	0.764	19.41	0.085	2.16	2.875	73.03	1.384	35.15	1.177	29.89	31.96	142.17	21.43	3.75	**C0764-085-2875-S**	1.529	38.84	25.08	111.58	18.64	3.26
C0764-085-3000-M	0.764	19.41	0.085	2.16	3.000	76.20	1.440	36.57	1.223	31.06	31.96	142.17	20.49	3.59	**C0764-085-3000-S**	1.592	40.43	25.08	111.58	17.81	3.12
C0764-085-3250-M	0.764	19.41	0.085	2.16	3.250	82.55	1.552	39.42	1.315	33.40	31.96	142.17	18.82	3.29	**C0764-085-3250-S**	1.717	43.62	25.08	111.58	16.37	2.86
C0764-085-3500-M	0.764	19.41	0.085	2.16	3.500	88.90	1.664	42.27	1.407	35.74	31.96	142.17	17.41	3.05	**C0764-085-3500-S**	1.843	46.81	25.08	111.58	15.14	2.65
C0764-085-3750-M	0.764	19.41	0.085	2.16	3.750	95.25	1.776	45.12	1.500	38.09	31.96	142.17	16.20	2.83	**C0764-085-3750-S**	1.969	50.01	25.08	111.58	14.08	2.46
C0764-085-4000-M	0.764	19.41	0.085	2.16	4.000	101.60	1.889	47.97	1.592	40.43	31.96	142.17	15.14	2.65	**C0764-085-4000-S**	2.094	53.20	25.08	111.58	13.16	2.30
C0764-085-4250-M	0.764	19.41	0.085	2.16	4.250	107.95	2.001	50.82	1.684	42.77	31.96	142.17	14.21	2.49	**C0764-085-4250-S**	2.220	56.39	25.08	111.58	12.36	2.16
C0764-085-4500-M	0.764	19.41	0.085	2.16	4.500	114.30	2.113	53.67	1.776	45.12	31.96	142.17	13.39	2.34	**C0764-085-4500-S**	2.346	59.58	25.08	111.58	11.64	2.04
C0764-085-4750-M	0.764	19.41	0.085	2.16	4.750	120.65	2.225	56.52	1.869	47.46	31.96	142.17	12.66	2.22	**C0764-085-4750-S**	2.471	62.77	25.08	111.58	11.01	1.93
C0764-085-5000-M	0.764	19.41	0.085	2.16	5.000	127.00	2.337	59.37	1.961	49.80	31.96	142.17	12.00	2.10	**C0764-085-5000-S**	2.597	65.96	25.08	111.58	10.44	1.83
C0764-085-5250-M	0.764	19.41	0.085	2.16	5.250	133.35	2.449	62.22	2.053	52.15	31.96	142.17	11.41	2.00	**C0764-085-5250-S**	2.722	69.15	25.08	111.58	9.92	1.74
C0764-085-5500-M	0.764	19.41	0.085	2.16	5.500	139.70	2.562	65.07	2.145	54.49	31.96	142.17	10.88	1.90	**C0764-085-5500-S**	2.848	72.34	25.08	111.58	9.46	1.66
C0764-085-5750-M	0.764	19.41	0.085	2.16	5.750	146.05	2.674	67.92	2.238	56.83	31.96	142.17	10.39	1.82	**C0764-085-5750-S**	2.974	75.53	25.08	111.58	9.04	1.58
C0764-085-6000-M	0.764	19.41	0.085	2.16	6.000	152.40	2.786	70.76	2.330	59.18	31.96	142.17	9.95	1.74	**C0764-085-6000-S**	3.099	78.72	25.08	111.58	8.65	1.51
C0764-085-6250-M	0.764	19.41	0.085	2.16	6.250	158.75	2.898	73.61	2.422	61.52	31.96	142.17	9.54	1.67	**C0764-085-6250-S**	3.225	81.91	25.08	111.58	8.29	1.45
C0764-085-6500-M	0.764	19.41	0.085	2.16	6.500	165.10	3.010	76.46	2.514	63.86	31.96	142.17	9.16	1.60	**C0764-085-6500-S**	3.350	85.10	25.08	111.58	7.96	1.39
C0764-085-6750-M	0.764	19.41	0.085	2.16	6.750	171.45	3.123	79.31	2.607	66.21	31.96	142.17	8.81	1.54	**C0764-085-6750-S**	3.476	88.29	25.08	111.58	7.66	1.34
C0764-085-7000-M	0.764	19.41	0.085	2.16	7.000	177.80	3.235	82.16	2.699	68.55	31.96	142.17	8.49	1.49	**C0764-085-7000-S**	3.602	91.48	25.08	111.58	7.38	1.29
C0764-085-7500-M	0.764	19.41	0.085	2.16	7.500	190.50	3.459	87.86	2.883	73.24	31.96	142.17	7.91	1.38	**C0764-085-7500-S**	3.853	97.86	25.08	111.58	6.88	1.20
C0764-085-8000-M	0.764	19.41	0.085	2.16	8.000	203.20	3.683	93.56	3.068	77.92	31.96	142.17	7.40	1.30	**C0764-085-8000-S**	4.104	104.24	25.08	111.58	6.44	1.13
C0764-085-8500-M	0.764	19.41	0.085	2.16	8.500	215.90	3.908	99.26	3.252	82.61	31.96	142.17	6.96	1.22	**C0764-085-8500-S**	4.355	110.62	25.08	111.58	6.05	1.06
C0764-085-9000-M	0.764	19.41	0.085	2.16	9.000	228.60	4.132	104.96	3.437	87.29	31.96	142.17	6.57	1.15	**C0764-085-9000-S**	4.606	117.00	25.08	111.58	5.71	1.00
C0764-085-9500-M	0.764	19.41	0.085	2.16	9.500	241.30	4.357	110.66	3.621	91.98	31.96	142.17	6.21	1.09	**C0764-085-9500-S**	4.858	123.38	25.08	111.58	5.40	0.95
C0764-092-1125-M	0.764	19.41	0.092	2.34	1.125	28.58	0.645	16.39	0.589	14.95	39.76	176.85	82.88	14.50	**C0764-092-1125-S**	0.694	17.63	31.07	138.20	72.07	12.61
C0764-092-1250-M	0.764	19.41	0.092	2.34	1.250	31.75	0.707	17.95	0.641	16.29	39.76	176.85	73.17	12.80	**C0764-092-1250-S**	0.762	19.35	31.07	138.20	63.62	11.13
C0764-092-1375-M	0.764	19.41	0.092	2.34	1.375	34.93	0.768	19.50	0.694	17.62	39.76	176.85	65.49	11.46	**C0764-092-1375-S**	0.829	21.07	31.07	138.20	56.94	9.97
C0764-092-1500-M	0.764	19.41	0.092	2.34	1.500	38.10	0.829	21.06	0.746	18.96	39.76	176.85	59.27	10.37	**C0764-092-1500-S**	0.897	22.79	31.07	138.20	51.54	9.02
C0764-092-1625-M	0.764	19.41	0.092	2.34	1.625	41.28	0.890	22.62	0.799	20.29	39.76	176.85	54.13	9.47	**C0764-092-1625-S**	0.965	24.51	31.07	138.20	47.07	8.24
C0764-092-1750-M	0.764	19.41	0.092	2.34	1.750	44.45	0.952	24.17	0.851	21.63	39.76	176.85	49.80	8.72	**C0764-092-1750-S**	1.033	26.23	31.07	138.20	43.31	7.58
C0764-092-1875-M	0.764	19.41	0.092	2.34	1.875	47.63	1.013	25.73	0.904	22.96	39.76	176.85	46.12	8.07	**C0764-092-1875-S**	1.100	27.95	31.07	138.20	40.11	7.02
C0764-092-2000-M	0.764	19.41	0.092	2.34	2.000	50.80	1.074	27.29	0.956	24.29	39.76	176.85	42.95	7.52	**C0764-092-2000-S**	1.168	29.67	31.07	138.20	37.35	6.54
C0764-092-2125-M	0.764	19.41	0.092	2.34	2.125	53.98	1.136	28.84	1.009	25.63	39.76	176.85	40.18	7.03	**C0764-092-2125-S**	1.236	31.39	31.07	138.20	34.94	6.11

Part Numbers with an "*" are squared and not ground. **Part Numbers in bold** represent the newly expanded Associated Spring RAYMOND compression spring offering.

MUSIC WIRE															STAINLESS STEEL						
Catalog #	Outside Diameter (OD)		Wire Diameter (d)		Free Length (L) Approx		Load Length (L_1)		Solid Height (Sh) Approx		Load (P) at L_1		Spring Rate (R)		Catalog #	Load Length (L_1)		Load (P) at L_1		Spring Rate (R)	
	in	mm	in	mm	in	mm	in	mm	in	mm	lb	N	lb/in	N/mm		in	mm	lb	N	lb/in	N/mm
C0764-092-2250-M	0.764	19.41	0.092	2.34	2.250	57.15	1.197	30.40	1.062	26.96	39.76	176.85	37.75	6.61	**C0764-092-2250-S**	1.304	33.11	31.07	138.20	32.83	5.74
C0764-092-2375-M	0.764	19.41	0.092	2.34	2.375	60.33	1.258	31.96	1.114	28.30	39.76	176.85	35.60	6.23	**C0764-092-2375-S**	1.371	34.83	31.07	138.20	30.95	5.42
C0764-092-2500-M	0.764	19.41	0.092	2.34	2.500	63.50	1.319	33.51	1.167	29.63	39.76	176.85	33.68	5.89	**C0764-092-2500-S**	1.439	36.55	31.07	138.20	29.28	5.12
C0764-092-2625-M	0.764	19.41	0.092	2.34	2.625	66.68	1.381	35.07	1.219	30.97	39.76	176.85	31.95	5.59	**C0764-092-2625-S**	1.507	38.27	31.07	138.20	27.78	4.86
C0764-092-2750-M	0.764	19.41	0.092	2.34	2.750	69.85	1.442	36.63	1.272	32.30	39.76	176.85	30.40	5.32	**C0764-092-2750-S**	1.575	39.99	31.07	138.20	26.43	4.63
C0764-092-2875-M	0.764	19.41	0.092	2.34	2.875	73.03	1.503	38.18	1.324	33.64	39.76	176.85	28.98	5.07	**C0764-092-2875-S**	1.642	41.71	31.07	138.20	25.20	4.41
C0764-092-3000-M	0.764	19.41	0.092	2.34	3.000	76.20	1.565	39.74	1.377	34.97	39.76	176.85	27.70	4.85	**C0764-092-3000-S**	1.710	43.43	31.07	138.20	24.08	4.21
C0764-092-3250-M	0.764	19.41	0.092	2.34	3.250	82.55	1.687	42.85	1.482	37.64	39.76	176.85	25.44	4.45	**C0764-092-3250-S**	1.845	46.87	31.07	138.20	22.12	3.87
C0764-092-3500-M	0.764	19.41	0.092	2.34	3.500	88.90	1.810	45.97	1.587	40.31	39.76	176.85	23.52	4.12	**C0764-092-3500-S**	1.981	50.32	31.07	138.20	20.45	3.58
C0764-092-3750-M	0.764	19.41	0.092	2.34	3.750	95.25	1.932	49.08	1.692	42.98	39.76	176.85	21.87	3.83	**C0764-092-3750-S**	2.116	53.76	31.07	138.20	19.02	3.33
C0764-092-4000-M	0.764	19.41	0.092	2.34	4.000	101.60	2.055	52.19	1.797	45.65	39.76	176.85	20.44	3.58	**C0764-092-4000-S**	2.252	57.20	31.07	138.20	17.77	3.11
C0764-092-4250-M	0.764	19.41	0.092	2.34	4.250	107.95	2.177	55.30	1.902	48.32	39.76	176.85	19.18	3.36	**C0764-092-4250-S**	2.387	60.64	31.07	138.20	16.68	2.92
C0764-092-4500-M	0.764	19.41	0.092	2.34	4.500	114.30	2.300	58.42	2.007	50.98	39.76	176.85	18.07	3.16	**C0764-092-4500-S**	2.523	64.08	31.07	138.20	15.71	2.75
C0764-092-4750-M	0.764	19.41	0.092	2.34	4.750	120.65	2.422	61.53	2.112	53.65	39.76	176.85	17.08	2.99	**C0764-092-4750-S**	2.658	67.52	31.07	138.20	14.85	2.60
C0764-092-5000-M	0.764	19.41	0.092	2.34	5.000	127.00	2.545	64.64	2.217	56.32	39.76	176.85	16.20	2.83	**C0764-092-5000-S**	2.794	70.96	31.07	138.20	14.08	2.46
C0764-092-5250-M	0.764	19.41	0.092	2.34	5.250	133.35	2.668	67.76	2.322	58.99	39.76	176.85	15.40	2.69	**C0764-092-5250-S**	2.929	74.40	31.07	138.20	13.39	2.34
C0764-092-5500-M	0.764	19.41	0.092	2.34	5.500	139.70	2.790	70.87	2.428	61.66	39.76	176.85	14.67	2.57	**C0764-092-5500-S**	3.065	77.84	31.07	138.20	12.76	2.23
C0764-092-5750-M	0.764	19.41	0.092	2.34	5.750	146.05	2.913	73.98	2.533	64.33	39.76	176.85	14.01	2.45	**C0764-092-5750-S**	3.200	81.29	31.07	138.20	12.19	2.13
C0764-092-6000-M	0.764	19.41	0.092	2.34	6.000	152.40	3.035	77.10	2.638	67.00	39.76	176.85	13.41	2.35	**C0764-092-6000-S**	3.336	84.73	31.07	138.20	11.66	2.04
C0764-092-6250-M	0.764	19.41	0.092	2.34	6.250	158.75	3.158	80.21	2.743	69.67	39.76	176.85	12.86	2.25	**C0764-092-6250-S**	3.471	88.17	31.07	138.20	11.18	1.96
C0764-092-6500-M	0.764	19.41	0.092	2.34	6.500	165.10	3.280	83.32	2.848	72.34	39.76	176.85	12.35	2.16	**C0764-092-6500-S**	3.607	91.61	31.07	138.20	10.74	1.88
C0764-092-6750-M	0.764	19.41	0.092	2.34	6.750	171.45	3.403	86.44	2.953	75.01	39.76	176.85	11.88	2.08	**C0764-092-6750-S**	3.742	95.05	31.07	138.20	10.33	1.81
C0764-092-7000-M	0.764	19.41	0.092	2.34	7.000	177.80	3.526	89.55	3.058	77.67	39.76	176.85	11.44	2.00	**C0764-092-7000-S**	3.878	98.49	31.07	138.20	9.95	1.74
C0764-092-7500-M	0.764	19.41	0.092	2.34	7.500	190.50	3.771	95.78	3.268	83.01	39.76	176.85	10.66	1.87	**C0764-092-7500-S**	4.149	105.37	31.07	138.20	9.27	1.62
C0764-092-8000-M	0.764	19.41	0.092	2.34	8.000	203.20	4.016	102.00	3.478	88.35	39.76	176.85	9.98	1.75	**C0764-092-8000-S**	4.419	112.25	31.07	138.20	8.68	1.52
C0764-092-8500-M	0.764	19.41	0.092	2.34	8.500	215.90	4.261	108.23	3.688	93.69	39.76	176.85	9.38	1.64	**C0764-092-8500-S**	4.690	119.14	31.07	138.20	8.16	1.43
C0764-092-9000-M	0.764	19.41	0.092	2.34	9.000	228.60	4.506	114.45	3.899	99.03	39.76	176.85	8.85	1.55	**C0764-092-9000-S**	4.961	126.02	31.07	138.20	7.69	1.35
C0764-092-9500-M	0.764	19.41	0.092	2.34	9.500	241.30	4.751	120.68	4.109	104.36	39.76	176.85	8.37	1.47	**C0764-092-9500-S**	5.232	132.90	31.07	138.20	7.28	1.27
C0764-098-1125-M	0.764	19.41	0.098	2.49	1.125	28.58	0.684	17.37	0.636	16.17	47.30	210.40	107.25	18.77	**C0764-098-1125-S**	0.730	18.55	36.82	163.78	93.26	16.32
C0764-098-1250-M	0.764	19.41	0.098	2.49	1.250	31.75	0.750	19.04	0.694	17.64	47.30	210.40	94.53	16.54	**C0764-098-1250-S**	0.802	20.37	36.82	163.78	82.20	14.38
C0764-098-1375-M	0.764	19.41	0.098	2.49	1.375	34.93	0.815	20.71	0.752	19.11	47.30	210.40	84.51	14.79	**C0764-098-1375-S**	0.874	22.20	36.82	163.78	73.48	12.86
C0764-098-1500-M	0.764	19.41	0.098	2.49	1.500	38.10	0.881	22.38	0.810	20.58	47.30	210.40	76.41	13.37	**C0764-098-1500-S**	0.946	24.02	36.82	163.78	66.44	11.63
C0764-098-1625-M	0.764	19.41	0.098	2.49	1.625	41.28	0.947	24.04	0.868	22.05	47.30	210.40	69.72	12.20	**C0764-098-1625-S**	1.018	25.85	36.82	163.78	60.63	10.61
C0764-098-1750-M	0.764	19.41	0.098	2.49	1.750	44.45	1.012	25.71	0.926	23.52	47.30	210.40	64.11	11.22	**C0764-098-1750-S**	1.090	27.68	36.82	163.78	55.75	9.76
C0764-098-1875-M	0.764	19.41	0.098	2.49	1.875	47.63	1.078	27.38	0.984	25.00	47.30	210.40	59.34	10.38	**C0764-098-1875-S**	1.161	29.50	36.82	163.78	51.60	9.03
C0764-098-2000-M	0.764	19.41	0.098	2.49	2.000	50.80	1.144	29.05	1.042	26.47	47.30	210.40	55.23	9.67	**C0764-098-2000-S**	1.233	31.33	36.82	163.78	48.03	8.40
C0764-098-2125-M	0.764	19.41	0.098	2.49	2.125	53.98	1.209	30.71	1.100	27.94	47.30	210.40	51.65	9.04	**C0764-098-2125-S**	1.305	33.15	36.82	163.78	44.91	7.86
C0764-098-2250-M	0.764	19.41	0.098	2.49	2.250	57.15	1.275	32.38	1.158	29.41	47.30	210.40	48.51	8.49	**C0764-098-2250-S**	1.377	34.98	36.82	163.78	42.18	7.38
C0764-098-2375-M	0.764	19.41	0.098	2.49	2.375	60.33	1.341	34.05	1.216	30.88	47.30	210.40	45.72	8.00	**C0764-098-2375-S**	1.449	36.80	36.82	163.78	39.76	6.96
C0764-098-2500-M	0.764	19.41	0.098	2.49	2.500	63.50	1.406	35.72	1.274	32.36	47.30	210.40	43.24	7.57	**C0764-098-2500-S**	1.521	38.63	36.82	163.78	37.60	6.58
C0764-098-2625-M	0.764	19.41	0.098	2.49	2.625	66.68	1.472	37.39	1.332	33.83	47.30	210.40	41.02	7.18	**C0764-098-2625-S**	1.593	40.46	36.82	163.78	35.67	6.24
C0764-098-2750-M	0.764	19.41	0.098	2.49	2.750	69.85	1.538	39.05	1.390	35.30	47.30	210.40	39.01	6.83	**C0764-098-2750-S**	1.665	42.28	36.82	163.78	33.92	5.94
C0764-098-2875-M	0.764	19.41	0.098	2.49	2.875	73.03	1.603	40.72	1.448	36.77	47.30	210.40	37.19	6.51	**C0764-098-2875-S**	1.736	44.11	36.82	163.78	32.34	5.66
C0764-098-3000-M	0.764	19.41	0.098	2.49	3.000	76.20	1.669	42.39	1.506	38.24	47.30	210.40	35.53	6.22	**C0764-098-3000-S**	1.808	45.93	36.82	163.78	30.90	5.41
C0764-098-3250-M	0.764	19.41	0.098	2.49	3.250	82.55	1.800	45.72	1.622	41.19	47.30	210.40	32.62	5.71	**C0764-098-3250-S**	1.952	49.58	36.82	163.78	28.37	4.96
C0764-098-3500-M	0.764	19.41	0.098	2.49	3.500	88.90	1.931	49.06	1.737	44.13	47.30	210.40	30.16	5.28	**C0764-098-3500-S**	2.096	53.24	36.82	163.78	26.22	4.59
C0764-098-3750-M	0.764	19.41	0.098	2.49	3.750	95.25	2.063	52.39	1.853	47.07	47.30	210.40	28.03	4.91	**C0764-098-3750-S**	2.240	56.89	36.82	163.78	24.38	4.27
C0764-098-4000-M	0.764	19.41	0.098	2.49	4.000	101.60	2.194	55.73	1.969	50.02	47.30	210.40	26.19	4.58	**C0764-098-4000-S**	2.383	60.54	36.82	163.78	22.78	3.99
C0764-098-4250-M	0.764	19.41	0.098	2.49	4.250	107.95	2.325	59.07	2.085	52.96	47.30	210.40	24.58	4.30	**C0764-098-4250-S**	2.527	64.19	36.82	163.78	21.37	3.74
C0764-098-4500-M	0.764	19.41	0.098	2.49	4.500	114.30	2.457	62.40	2.201	55.90	47.30	210.40	23.15	4.05	**C0764-098-4500-S**	2.671	67.84	36.82	163.78	20.13	3.52
C0764-098-4750-M	0.764	19.41	0.098	2.49	4.750	120.65	2.588	65.74	2.317	58.85	47.30	210.40	21.88	3.83	**C0764-098-4750-S**	2.815	71.49	36.82	163.78	19.02	3.33
C0764-098-5000-M	0.764	19.41	0.098	2.49	5.000	127.00	2.719	69.07	2.433	61.79	47.30	210.40	20.74	3.63	**C0764-098-5000-S**	2.958	75.14	36.82	163.78	18.03	3.16
C0764-098-5250-M	0.764	19.41	0.098	2.49	5.250	133.35	2.851	72.41	2.549	64.74	47.30	210.40	19.71	3.45	**C0764-098-5250-S**	3.102	78.80	36.82	163.78	17.14	3.00
C0764-098-5500-M	0.764	19.41	0.098	2.49	5.500	139.70	2.982	75.74	2.665	67.68	47.30	210.40	18.78	3.29	**C0764-098-5500-S**	3.246	82.45	36.82	163.78	16.33	2.86
C0764-098-5750-M	0.764	19.41	0.098	2.49	5.750	146.05	3.113	79.08	2.780	70.62	47.30	210.40	17.94	3.14	**C0764-098-5750-S**	3.390	86.10	36.82	163.78	15.60	2.73
C0764-098-6000-M	0.764	19.41	0.098	2.49	6.000	152.40	3.245	82.41	2.896	73.57	47.30	210.40	17.17	3.00	**C0764-098-6000-S**	3.533	89.75	36.82	163.78	14.93	2.61
C0764-098-6250-M	0.764	19.41	0.098	2.49	6.250	158.75	3.376	85.75	3.012	76.51	47.30	210.40	16.46	2.88	**C0764-098-6250-S**	3.677	93.40	36.82	163.78	14.31	2.50
C0764-098-6500-M	0.764	19.41	0.098	2.49	6.500	165.10	3.507	89.08	3.128	79.45	47.30	210.40	15.81	2.77	**C0764-098-6500-S**	3.821	97.05	36.82	163.78	13.74	2.41
C0764-098-6750-M	0.764	19.41	0.098	2.49	6.750	171.45	3.639	92.42	3.244	82.40	47.30	210.40	15.20	2.66	**C0764-098-6750-S**	3.965	100.70	36.82	163.78	13.22	2.31
C0764-098-7000-M	0.764	19.41	0.098	2.49	7.000	177.80	3.770	95.76	3.360	85.34	47.30	210.40	14.64	2.56	**C0764-098-7000-S**	4.108	104.36	36.82	163.78	12.73	2.23
C0764-098-7500-M	0.764	19.41	0.098	2.49	7.500	190.50	4.033	102.43	3.592	91.23	47.30	210.40	13.64	2.39	**C0764-098-7500-S**	4.396	111.66	36.82	163.78	11.86	2.08
C0764-098-8000-M	0.764	19.41	0.098	2.49	8.000	203.20	4.295	109.10	3.823	97.11	47.30	210.40	12.77	2.23	**C0764-098-8000-S**	4.684	118.96	36.82	163.78	11.10	1.94
C0764-098-8500-M	0.764	19.41	0.098	2.49	8.500	215.90	4.558	115.77	4.055	103.00	47.30	210.40	12.00	2.10	**C0764-098-8500-S**	4.971	126.26	36.82	163.78	10.43	1.83
C0764-098-9000-M	0.764	19.41	0.098	2.49	9.000	228.60	4.820	122.44	4.287	108.89	47.30	210.40	11.32	1.98	**C0764-098-9000-S**	5.259	133.57	36.82	163.78	9.84	1.72

FOR INFORMATION ON ALTERNATIVE FINISHES, SEE PAGE 311

Part Numbers with an "*" are squared and not ground. **Part Numbers in bold** represent the newly expanded Associated Spring RAYMOND compression spring offering.

(OD) 0.764 - 0.764

MUSIC WIRE															STAINLESS STEEL						
Catalog #	Outside Diameter (OD)		Wire Diameter (d)		Free Length (L) Approx		Load Length (L_1)		Solid Height (Sh) Approx		Load (P) at L_1		Spring Rate (R)		Catalog #	Load Length (L_1)		Load (P) at L_1		Spring Rate (R)	
	in	mm	in	mm	in	mm	in	mm	in	mm	lb	N	lb/in	N/mm		in	mm	lb	N	lb/in	N/mm
C0764-098-9500-M	0.764	19.41	0.098	2.49	9.500	241.30	5.083	129.11	4.519	114.78	47.30	210.40	10.71	1.87	**C0764-098-9500-S**	5.546	140.87	36.82	163.78	9.31	1.63
C0764-105-1125-M	0.764	19.41	0.105	2.67	1.125	28.58	0.727	18.46	0.689	17.51	57.14	254.19	143.53	25.12	C0764-105-1125-S	0.770	19.57	44.27	196.92	124.81	21.84
C0764-105-1250-M	0.764	19.41	0.105	2.67	1.250	31.75	0.797	20.26	0.754	19.14	57.14	254.19	126.28	22.10	C0764-105-1250-S	0.847	21.51	44.27	196.92	109.81	19.22
C0764-105-1375-M	0.764	19.41	0.105	2.67	1.375	34.93	0.868	22.05	0.818	20.77	57.14	254.19	112.73	19.73	C0764-105-1375-S	0.923	23.45	44.27	196.92	98.03	17.15
C0764-105-1500-M	0.764	19.41	0.105	2.67	1.500	38.10	0.939	23.84	0.882	22.39	57.14	254.19	101.81	17.82	C0764-105-1500-S	1.000	25.40	44.27	196.92	88.53	15.49
C0764-105-1625-M	0.764	19.41	0.105	2.67	1.625	41.28	1.009	25.64	0.946	24.02	57.14	254.19	92.82	16.24	C0764-105-1625-S	1.076	27.34	44.27	196.92	80.71	14.12
C0764-105-1750-M	0.764	19.41	0.105	2.67	1.750	44.45	1.080	27.43	1.010	25.65	57.14	254.19	85.28	14.92	C0764-105-1750-S	1.153	29.29	44.27	196.92	74.16	12.98
C0764-105-1875-M	0.764	19.41	0.105	2.67	1.875	47.63	1.151	29.22	1.074	27.28	57.14	254.19	78.88	13.80	C0764-105-1875-S	1.230	31.23	44.27	196.92	68.59	12.00
C0764-105-2000-M	0.764	19.41	0.105	2.67	2.000	50.80	1.221	31.02	1.138	28.90	57.14	254.19	73.37	12.84	C0764-105-2000-S	1.306	33.18	44.27	196.92	63.80	11.17
C0764-105-2125-M	0.764	19.41	0.105	2.67	2.125	53.98	1.292	32.81	1.202	30.53	57.14	254.19	68.58	12.00	C0764-105-2125-S	1.383	35.12	44.27	196.92	59.64	10.44
C0764-105-2250-M	0.764	19.41	0.105	2.67	2.250	57.15	1.362	34.60	1.266	32.16	57.14	254.19	64.38	11.27	C0764-105-2250-S	1.459	37.06	44.27	196.92	55.98	9.80
C0764-105-2375-M	0.764	19.41	0.105	2.67	2.375	60.33	1.433	36.40	1.330	33.78	57.14	254.19	60.66	10.62	C0764-105-2375-S	1.536	39.01	44.27	196.92	52.75	9.23
C0764-105-2500-M	0.764	19.41	0.105	2.67	2.500	63.50	1.504	38.19	1.394	35.41	57.14	254.19	57.35	10.04	C0764-105-2500-S	1.612	40.95	44.27	196.92	49.87	8.73
C0764-105-2625-M	0.764	19.41	0.105	2.67	2.625	66.68	1.574	39.99	1.458	37.04	57.14	254.19	54.38	9.52	C0764-105-2625-S	1.689	42.90	44.27	196.92	47.29	8.28
C0764-105-2750-M	0.764	19.41	0.105	2.67	2.750	69.85	1.645	41.78	1.522	38.67	57.14	254.19	51.71	9.05	C0764-105-2750-S	1.765	44.84	44.27	196.92	44.96	7.87
C0764-105-2875-M	0.764	19.41	0.105	2.67	2.875	73.03	1.715	43.57	1.586	40.29	57.14	254.19	49.28	8.62	C0764-105-2875-S	1.842	46.79	44.27	196.92	42.85	7.50
C0764-105-3000-M	0.764	19.41	0.105	2.67	3.000	76.20	1.786	45.37	1.650	41.92	57.14	254.19	47.07	8.24	C0764-105-3000-S	1.918	48.73	44.27	196.92	40.93	7.16
C0764-105-3250-M	0.764	19.41	0.105	2.67	3.250	82.55	1.927	48.95	1.779	45.18	57.14	254.19	43.20	7.56	C0764-105-3250-S	2.072	52.62	44.27	196.92	37.57	6.57
C0764-105-3500-M	0.764	19.41	0.105	2.67	3.500	88.90	2.069	52.54	1.907	48.43	57.14	254.19	39.92	6.99	C0764-105-3500-S	2.225	56.51	44.27	196.92	34.71	6.07
C0764-105-3750-M	0.764	19.41	0.105	2.67	3.750	95.25	2.210	56.13	2.035	51.68	57.14	254.19	37.10	6.49	C0764-105-3750-S	2.378	60.39	44.27	196.92	32.26	5.65
C0764-105-4000-M	0.764	19.41	0.105	2.67	4.000	101.60	2.351	59.71	2.163	54.94	57.14	254.19	34.65	6.06	C0764-105-4000-S	2.531	64.28	44.27	196.92	30.13	5.27
C0764-105-4250-M	0.764	19.41	0.105	2.67	4.250	107.95	2.492	63.30	2.291	58.19	57.14	254.19	32.51	5.69	C0764-105-4250-S	2.684	68.17	44.27	196.92	28.27	4.95
C0764-105-4500-M	0.764	19.41	0.105	2.67	4.500	114.30	2.633	66.89	2.419	61.45	57.14	254.19	30.61	5.36	C0764-105-4500-S	2.837	72.06	44.27	196.92	26.62	4.66
C0764-105-4750-M	0.764	19.41	0.105	2.67	4.750	120.65	2.775	70.48	2.547	64.70	57.14	254.19	28.93	5.06	C0764-105-4750-S	2.990	75.95	44.27	196.92	25.16	4.40
C0764-105-5000-M	0.764	19.41	0.105	2.67	5.000	127.00	2.916	74.06	2.675	67.96	57.14	254.19	27.42	4.80	C0764-105-5000-S	3.143	79.84	44.27	196.92	23.84	4.17
C0764-105-5250-M	0.764	19.41	0.105	2.67	5.250	133.35	3.057	77.65	2.804	71.21	57.14	254.19	26.06	4.56	C0764-105-5250-S	3.296	83.73	44.27	196.92	22.66	3.97
C0764-105-5500-M	0.764	19.41	0.105	2.67	5.500	139.70	3.198	81.24	2.932	74.47	57.14	254.19	24.83	4.34	C0764-105-5500-S	3.449	87.61	44.27	196.92	21.59	3.78
C0764-105-5750-M	0.764	19.41	0.105	2.67	5.750	146.05	3.340	84.82	3.060	77.72	57.14	254.19	23.71	4.15	C0764-105-5750-S	3.602	91.50	44.27	196.92	20.61	3.61
C0764-105-6000-M	0.764	19.41	0.105	2.67	6.000	152.40	3.481	88.41	3.188	80.98	57.14	254.19	22.68	3.97	C0764-105-6000-S	3.756	95.39	44.27	196.92	19.72	3.45
C0764-105-6250-M	0.764	19.41	0.105	2.67	6.250	158.75	3.622	92.00	3.316	84.23	57.14	254.19	21.74	3.81	C0764-105-6250-S	3.909	99.28	44.27	196.92	18.91	3.31
C0764-105-6500-M	0.764	19.41	0.105	2.67	6.500	165.10	3.763	95.59	3.444	87.48	57.14	254.19	20.88	3.65	C0764-105-6500-S	4.062	103.17	44.27	196.92	18.16	3.18
C0764-105-6750-M	0.764	19.41	0.105	2.67	6.750	171.45	3.904	99.17	3.572	90.74	57.14	254.19	20.08	3.51	C0764-105-6750-S	4.215	107.06	44.27	196.92	17.46	3.06
C0764-105-7000-M	0.764	19.41	0.105	2.67	7.000	177.80	4.046	102.76	3.701	93.99	57.14	254.19	19.34	3.38	C0764-105-7000-S	4.368	110.94	44.27	196.92	16.82	2.94
C0764-105-7500-M	0.764	19.41	0.105	2.67	7.500	190.50	4.328	109.93	3.957	100.50	57.14	254.19	18.02	3.15	C0764-105-7500-S	4.674	118.72	44.27	196.92	15.67	2.74
C0764-105-8000-M	0.764	19.41	0.105	2.67	8.000	203.20	4.611	117.11	4.213	107.01	57.14	254.19	16.86	2.95	C0764-105-8000-S	4.980	126.50	44.27	196.92	14.66	2.57
C0764-105-8500-M	0.764	19.41	0.105	2.67	8.500	215.90	4.893	124.28	4.469	113.52	57.14	254.19	15.84	2.77	C0764-105-8500-S	5.286	134.28	44.27	196.92	13.78	2.41
C0764-105-9000-M	0.764	19.41	0.105	2.67	9.000	228.60	5.175	131.46	4.726	120.03	57.14	254.19	14.94	2.61	C0764-105-9000-S	5.593	142.05	44.27	196.92	12.99	2.27
C0764-105-9500-M	0.764	19.41	0.105	2.67	9.500	241.30	5.458	138.63	4.982	126.54	57.14	254.19	14.14	2.47	C0764-105-9500-S	5.899	149.83	44.27	196.92	12.29	2.15
C0764-112-1125-M	0.764	19.41	0.112	2.85	1.125	28.58	0.767	19.48	0.739	18.77	68.15	303.16	190.44	33.33	C0764-112-1125-S	0.808	20.52	52.54	233.71	165.60	28.98
C0764-112-1250-M	0.764	19.41	0.112	2.85	1.250	31.75	0.842	21.40	0.809	20.55	68.15	303.16	167.24	29.27	C0764-112-1250-S	0.889	22.57	52.54	233.71	145.42	25.45
C0764-112-1375-M	0.764	19.41	0.112	2.85	1.375	34.93	0.918	23.31	0.879	22.33	68.15	303.16	149.07	26.09	C0764-112-1375-S	0.970	24.63	52.54	233.71	129.63	22.68
C0764-112-1500-M	0.764	19.41	0.112	2.85	1.500	38.10	0.993	25.23	0.949	24.10	68.15	303.16	134.47	23.53	C0764-112-1500-S	1.051	26.69	52.54	233.71	116.93	20.46
C0764-112-1625-M	0.764	19.41	0.112	2.85	1.625	41.28	1.069	27.14	1.019	25.88	68.15	303.16	122.47	21.43	C0764-112-1625-S	1.132	28.74	52.54	233.71	106.50	18.64
C0764-112-1750-M	0.764	19.41	0.112	2.85	1.750	44.45	1.144	29.05	1.089	27.65	68.15	303.16	112.44	19.68	C0764-112-1750-S	1.213	30.80	52.54	233.71	97.77	17.11
C0764-112-1875-M	0.764	19.41	0.112	2.85	1.875	47.63	1.219	30.97	1.159	29.43	68.15	303.16	103.93	18.19	C0764-112-1875-S	1.294	32.86	52.54	233.71	90.37	15.81
C0764-112-2000-M	0.764	19.41	0.112	2.85	2.000	50.80	1.295	32.88	1.229	31.21	68.15	303.16	96.61	16.91	C0764-112-2000-S	1.375	34.91	52.54	233.71	84.01	14.70
C0764-112-2125-M	0.764	19.41	0.112	2.85	2.125	53.98	1.370	34.80	1.298	32.98	68.15	303.16	90.26	15.80	C0764-112-2125-S	1.456	36.97	52.54	233.71	78.49	13.74
C0764-112-2250-M	0.764	19.41	0.112	2.85	2.250	57.15	1.445	36.71	1.368	34.76	68.15	303.16	84.69	14.82	C0764-112-2250-S	1.537	39.03	52.54	233.71	73.64	12.89
C0764-112-2375-M	0.764	19.41	0.112	2.85	2.375	60.33	1.521	38.62	1.438	36.53	68.15	303.16	79.77	13.96	C0764-112-2375-S	1.618	41.09	52.54	233.71	69.36	12.14
C0764-112-2500-M	0.764	19.41	0.112	2.85	2.500	63.50	1.596	40.54	1.508	38.31	68.15	303.16	75.39	13.19	C0764-112-2500-S	1.699	43.14	52.54	233.71	65.56	11.47
C0764-112-2625-M	0.764	19.41	0.112	2.85	2.625	66.68	1.671	42.45	1.578	40.09	68.15	303.16	71.46	12.51	C0764-112-2625-S	1.780	45.20	52.54	233.71	62.14	10.87
C0764-112-2750-M	0.764	19.41	0.112	2.85	2.750	69.85	1.747	44.37	1.648	41.86	68.15	303.16	67.93	11.89	C0764-112-2750-S	1.860	47.26	52.54	233.71	59.07	10.34
C0764-112-2875-M	0.764	19.41	0.112	2.85	2.875	73.03	1.822	46.28	1.718	43.64	68.15	303.16	64.72	11.33	C0764-112-2875-S	1.941	49.31	52.54	233.71	56.28	9.85
C0764-112-3000-M	0.764	19.41	0.112	2.85	3.000	76.20	1.897	48.19	1.788	45.41	68.15	303.16	61.81	10.82	C0764-112-3000-S	2.022	51.37	52.54	233.71	53.75	9.41
C0764-112-3250-M	0.764	19.41	0.112	2.85	3.250	82.55	2.048	52.02	1.928	48.96	68.15	303.16	56.70	9.92	C0764-112-3250-S	2.184	55.48	52.54	233.71	49.31	8.63
C0764-112-3500-M	0.764	19.41	0.112	2.85	3.500	88.90	2.199	55.85	2.068	52.52	68.15	303.16	52.38	9.17	C0764-112-3500-S	2.346	59.60	52.54	233.71	45.54	7.97
C0764-112-3750-M	0.764	19.41	0.112	2.85	3.750	95.25	2.349	59.68	2.207	56.07	68.15	303.16	48.66	8.52	C0764-112-3750-S	2.508	63.71	52.54	233.71	42.32	7.41
C0764-112-4000-M	0.764	19.41	0.112	2.85	4.000	101.60	2.500	63.50	2.347	59.62	68.15	303.16	45.44	7.95	C0764-112-4000-S	2.670	67.83	52.54	233.71	39.51	6.91
C0764-112-4250-M	0.764	19.41	0.112	2.85	4.250	107.95	2.651	67.33	2.487	63.17	68.15	303.16	42.62	7.46	C0764-112-4250-S	2.832	71.94	52.54	233.71	37.06	6.49
C0764-112-4500-M	0.764	19.41	0.112	2.85	4.500	114.30	2.802	71.16	2.627	66.72	68.15	303.16	40.13	7.02	C0764-112-4500-S	2.994	76.05	52.54	233.71	34.89	6.11
C0764-112-4750-M	0.764	19.41	0.112	2.85	4.750	120.65	2.952	74.99	2.767	70.28	68.15	303.16	37.91	6.63	C0764-112-4750-S	3.156	80.17	52.54	233.71	32.97	5.77
C0764-112-5000-M	0.764	19.41	0.112	2.85	5.000	127.00	3.103	78.81	2.907	73.83	68.15	303.16	35.93	6.29	C0764-112-5000-S	3.318	84.28	52.54	233.71	31.24	5.47
C0764-112-5250-M	0.764	19.41	0.112	2.85	5.250	133.35	3.254	82.64	3.046	77.38	68.15	303.16	34.14	5.97	C0764-112-5250-S	3.480	88.40	52.54	233.71	29.69	5.20
C0764-112-5500-M	0.764	19.41	0.112	2.85	5.500	139.70	3.404	86.47	3.186	80.93	68.15	303.16	32.52	5.69	C0764-112-5500-S	3.642	92.51	52.54	233.71	28.28	4.95

Part Numbers with an "*" are squared and not ground. **Part Numbers in bold** represent the newly expanded Associated Spring RAYMOND compression spring offering.

MUSIC WIRE															STAINLESS STEEL						
Catalog #	Outside Diameter (OD)		Wire Diameter (d)		Free Length (L) Approx		Load Length (L_1)		Solid Height (Sh) Approx		Load (P) at L_1		Spring Rate (R)		Catalog #	Load Length (L_1)		Load (P) at L_1		Spring Rate (R)	
	in	mm	in	mm	in	mm	in	mm	in	mm	lb	N	lb/in	N/mm		in	mm	lb	N	lb/in	N/mm
C0764-112-5750-M	0.764	19.41	0.112	2.85	5.750	146.05	3.555	90.30	3.326	84.48	68.15	303.16	31.05	5.43	**C0764-112-5750-S**	3.804	96.62	52.54	233.71	27.00	4.73
C0764-112-6000-M	0.764	19.41	0.112	2.85	6.000	152.40	3.706	94.13	3.466	88.03	68.15	303.16	29.71	5.20	**C0764-112-6000-S**	3.966	100.74	52.54	233.71	25.83	4.52
C0764-112-6250-M	0.764	19.41	0.112	2.85	6.250	158.75	3.856	97.95	3.606	91.59	68.15	303.16	28.47	4.98	**C0764-112-6250-S**	4.128	104.85	52.54	233.71	24.76	4.33
C0764-112-6500-M	0.764	19.41	0.112	2.85	6.500	165.10	4.007	101.78	3.746	95.14	68.15	303.16	27.34	4.78	**C0764-112-6500-S**	4.290	108.96	52.54	233.71	23.77	4.16
C0764-112-6750-M	0.764	19.41	0.112	2.85	6.750	171.45	4.158	105.61	3.885	98.69	68.15	303.16	26.29	4.60	**C0764-112-6750-S**	4.452	113.08	52.54	233.71	22.86	4.00
C0764-112-7000-M	0.764	19.41	0.112	2.85	7.000	177.80	4.309	109.44	4.025	102.24	68.15	303.16	25.32	4.43	**C0764-112-7000-S**	4.614	117.19	52.54	233.71	22.02	3.85
C0764-112-7500-M	0.764	19.41	0.112	2.85	7.500	190.50	4.610	117.09	4.305	109.34	68.15	303.16	23.58	4.13	**C0764-112-7500-S**	4.938	125.42	52.54	233.71	20.51	3.59
C0764-112-8000-M	0.764	19.41	0.112	2.85	8.000	203.20	4.911	124.75	4.585	116.45	68.15	303.16	22.07	3.86	**C0764-112-8000-S**	5.262	133.65	52.54	233.71	19.19	3.36
C0764-112-8500-M	0.764	19.41	0.112	2.85	8.500	215.90	5.213	132.40	4.864	123.55	68.15	303.16	20.73	3.63	**C0764-112-8500-S**	5.586	141.88	52.54	233.71	18.03	3.15
C0764-112-9000-M	0.764	19.41	0.112	2.85	9.000	228.60	5.514	140.06	5.144	130.66	68.15	303.16	19.55	3.42	**C0764-112-9000-S**	5.910	150.10	52.54	233.71	17.00	2.98
C0764-112-9500-M	0.764	19.41	0.112	2.85	9.500	241.30	5.816	147.71	5.424	137.76	68.15	303.16	18.50	3.24	**C0764-112-9500-S**	6.234	158.33	52.54	233.71	16.09	2.81
C0764-125-1125-M	0.764	19.41	0.125	3.18	1.125	28.58	0.834	21.19	0.822	20.88	91.82	408.43	315.61	55.23	**C0764-125-1125-S**	0.870	22.09	70.12	311.90	274.44	48.03
C0764-125-1250-M	0.764	19.41	0.125	3.18	1.250	31.75	0.918	23.30	0.902	22.91	91.82	408.43	276.16	48.33	**C0764-125-1250-S**	0.958	24.33	70.12	311.90	240.14	42.02
C0764-125-1375-M	0.764	19.41	0.125	3.18	1.375	34.93	1.001	25.42	0.982	24.93	91.82	408.43	245.47	42.96	**C0764-125-1375-S**	1.047	26.58	70.12	311.90	213.45	37.35
C0764-125-1500-M	0.764	19.41	0.125	3.18	1.500	38.10	1.084	27.54	1.062	26.96	91.82	408.43	220.93	38.66	**C0764-125-1500-S**	1.135	28.83	70.12	311.90	192.11	33.62
C0764-125-1625-M	0.764	19.41	0.125	3.18	1.625	41.28	1.168	29.66	1.142	28.99	91.82	408.43	200.84	35.15	**C0764-125-1625-S**	1.224	31.08	70.12	311.90	174.64	30.56
C0764-125-1750-M	0.764	19.41	0.125	3.18	1.750	44.45	1.251	31.78	1.221	31.02	91.82	408.43	184.10	32.22	**C0764-125-1750-S**	1.312	33.33	70.12	311.90	160.09	28.02
C0764-125-1875-M	0.764	19.41	0.125	3.18	1.875	47.63	1.335	33.90	1.301	33.05	91.82	408.43	169.94	29.74	**C0764-125-1875-S**	1.401	35.57	70.12	311.90	147.78	25.86
C0764-125-2000-M	0.764	19.41	0.125	3.18	2.000	50.80	1.418	36.02	1.381	35.08	91.82	408.43	157.80	27.62	**C0764-125-2000-S**	1.489	37.82	70.12	311.90	137.22	24.01
C0764-125-2125-M	0.764	19.41	0.125	3.18	2.125	53.98	1.502	38.14	1.461	37.11	91.82	408.43	147.28	25.77	**C0764-125-2125-S**	1.578	40.07	70.12	311.90	128.07	22.41
C0764-125-2250-M	0.764	19.41	0.125	3.18	2.250	57.15	1.585	40.26	1.541	39.14	91.82	408.43	138.08	24.16	**C0764-125-2250-S**	1.666	42.32	70.12	311.90	120.07	21.01
C0764-125-2375-M	0.764	19.41	0.125	3.18	2.375	60.33	1.668	42.38	1.621	41.17	91.82	408.43	129.96	22.74	**C0764-125-2375-S**	1.755	44.56	70.12	311.90	113.01	19.78
C0764-125-2500-M	0.764	19.41	0.125	3.18	2.500	63.50	1.752	44.50	1.701	43.20	91.82	408.43	122.74	21.48	**C0764-125-2500-S**	1.843	46.81	70.12	311.90	106.73	18.68
C0764-125-2625-M	0.764	19.41	0.125	3.18	2.625	66.68	1.835	46.62	1.781	45.23	91.82	408.43	116.28	20.35	**C0764-125-2625-S**	1.932	49.06	70.12	311.90	101.11	17.69
C0764-125-2750-M	0.764	19.41	0.125	3.18	2.750	69.85	1.919	48.74	1.861	47.26	91.82	408.43	110.46	19.33	**C0764-125-2750-S**	2.020	51.31	70.12	311.90	96.05	16.81
C0764-125-2875-M	0.764	19.41	0.125	3.18	2.875	73.03	2.002	50.86	1.941	49.29	91.82	408.43	105.20	18.41	**C0764-125-2875-S**	2.109	53.56	70.12	311.90	91.48	16.01
C0764-125-3000-M	0.764	19.41	0.125	3.18	3.000	76.20	2.086	52.98	2.021	51.32	91.82	408.43	100.42	17.57	**C0764-125-3000-S**	2.197	55.80	70.12	311.90	87.32	15.28
C0764-125-3250-M	0.764	19.41	0.125	3.18	3.250	82.55	2.253	57.21	2.180	55.38	91.82	408.43	92.05	16.11	**C0764-125-3250-S**	2.374	60.30	70.12	311.90	80.05	14.01
C0764-125-3500-M	0.764	19.41	0.125	3.18	3.500	88.90	2.419	61.45	2.340	59.44	91.82	408.43	84.97	14.87	**C0764-125-3500-S**	2.551	64.80	70.12	311.90	73.89	12.93
C0764-125-3750-M	0.764	19.41	0.125	3.18	3.750	95.25	2.586	65.69	2.500	63.50	91.82	408.43	78.90	13.81	**C0764-125-3750-S**	2.728	69.29	70.12	311.90	68.61	12.01
C0764-125-4000-M	0.764	19.41	0.125	3.18	4.000	101.60	2.753	69.93	2.660	67.56	91.82	408.43	73.64	12.89	**C0764-125-4000-S**	2.905	73.79	70.12	311.90	64.04	11.21
C0764-125-4250-M	0.764	19.41	0.125	3.18	4.250	107.95	2.920	74.17	2.820	71.62	91.82	408.43	69.04	12.08	**C0764-125-4250-S**	3.082	78.28	70.12	311.90	60.03	10.51
C0764-125-4500-M	0.764	19.41	0.125	3.18	4.500	114.30	3.087	78.41	2.979	75.68	91.82	408.43	64.98	11.37	**C0764-125-4500-S**	3.259	82.78	70.12	311.90	56.50	9.89
C0764-125-4750-M	0.764	19.41	0.125	3.18	4.750	120.65	3.254	82.65	3.139	79.74	91.82	408.43	61.37	10.74	**C0764-125-4750-S**	3.436	87.28	70.12	311.90	53.36	9.34
C0764-125-5000-M	0.764	19.41	0.125	3.18	5.000	127.00	3.421	86.89	3.299	83.80	91.82	408.43	58.14	10.17	**C0764-125-5000-S**	3.613	91.77	70.12	311.90	50.56	8.85
C0764-125-5250-M	0.764	19.41	0.125	3.18	5.250	133.35	3.588	91.12	3.459	87.86	91.82	408.43	55.23	9.67	**C0764-125-5250-S**	3.790	96.27	70.12	311.90	48.03	8.40
C0764-125-5500-M	0.764	19.41	0.125	3.18	5.500	139.70	3.754	95.36	3.619	91.92	91.82	408.43	52.60	9.21	**C0764-125-5500-S**	3.967	100.76	70.12	311.90	45.74	8.00
C0764-125-5750-M	0.764	19.41	0.125	3.18	5.750	146.05	3.921	99.60	3.779	95.97	91.82	408.43	50.21	8.79	**C0764-125-5750-S**	4.144	105.26	70.12	311.90	43.66	7.64
C0764-125-6000-M	0.764	19.41	0.125	3.18	6.000	152.40	4.088	103.84	3.938	100.03	91.82	408.43	48.03	8.40	**C0764-125-6000-S**	4.321	109.76	70.12	311.90	41.76	7.31
C0764-125-6250-M	0.764	19.41	0.125	3.18	6.250	158.75	4.255	108.08	4.098	104.09	91.82	408.43	46.03	8.05	**C0764-125-6250-S**	4.498	114.25	70.12	311.90	40.02	7.00
C0764-125-6500-M	0.764	19.41	0.125	3.18	6.500	165.10	4.422	112.32	4.258	108.15	91.82	408.43	44.19	7.73	**C0764-125-6500-S**	4.675	118.75	70.12	311.90	38.42	6.72
C0764-125-6750-M	0.764	19.41	0.125	3.18	6.750	171.45	4.589	116.56	4.418	112.21	91.82	408.43	42.49	7.44	**C0764-125-6750-S**	4.852	123.24	70.12	311.90	36.94	6.47
C0764-125-7000-M	0.764	19.41	0.125	3.18	7.000	177.80	4.756	120.79	4.578	116.27	91.82	408.43	40.91	7.16	**C0764-125-7000-S**	5.029	127.74	70.12	311.90	35.58	6.23
C0764-125-7500-M	0.764	19.41	0.125	3.18	7.500	190.50	5.089	129.27	4.897	124.39	91.82	408.43	38.09	6.67	**C0764-125-7500-S**	5.383	136.73	70.12	311.90	33.12	5.80
C0764-125-8000-M	0.764	19.41	0.125	3.18	8.000	203.20	5.423	137.75	5.217	132.51	91.82	408.43	35.63	6.24	**C0764-125-8000-S**	5.737	145.72	70.12	311.90	30.99	5.42
C0764-125-8500-M	0.764	19.41	0.125	3.18	8.500	215.90	5.757	146.23	5.537	140.63	91.82	408.43	33.47	5.86	**C0764-125-8500-S**	6.091	154.71	70.12	311.90	29.11	5.09
C0764-125-9000-M	0.764	19.41	0.125	3.18	9.000	228.60	6.091	154.70	5.856	148.75	91.82	408.43	31.56	5.52	**C0764-125-9000-S**	6.445	163.71	70.12	311.90	27.44	4.80
C0764-125-9500-M	0.764	19.41	0.125	3.18	9.500	241.30	6.424	163.18	6.176	156.87	91.82	408.43	29.86	5.22	**C0764-125-9500-S**	6.799	172.70	70.12	311.90	25.96	4.54
C0764-135-1125-M	0.764	19.41	0.135	3.43	1.125	28.58	0.879	22.32	0.877	22.27	112.97	502.51	458.38	80.22	**C0764-135-1125-S**	0.910	23.12	85.62	380.87	398.60	69.75
C0764-135-1250-M	0.764	19.41	0.135	3.43	1.250	31.75	0.968	24.58	0.964	24.47	112.97	502.51	399.92	69.99	**C0764-135-1250-S**	1.004	25.50	85.62	380.87	347.75	60.86
C0764-135-1375-M	0.764	19.41	0.135	3.43	1.375	34.93	1.056	26.83	1.050	26.68	112.97	502.51	354.68	62.07	**C0764-135-1375-S**	1.097	27.87	85.62	380.87	308.42	53.97
C0764-135-1500-M	0.764	19.41	0.135	3.43	1.500	38.10	1.145	29.09	1.137	28.88	112.97	502.51	318.63	55.76	**C0764-135-1500-S**	1.191	30.25	85.62	380.87	277.07	48.49
C0764-135-1625-M	0.764	19.41	0.135	3.43	1.625	41.28	1.234	31.35	1.224	31.08	112.97	502.51	289.24	50.62	**C0764-135-1625-S**	1.285	32.63	85.62	380.87	251.51	44.01
C0764-135-1750-M	0.764	19.41	0.135	3.43	1.750	44.45	1.323	33.61	1.311	33.29	112.97	502.51	264.81	46.34	**C0764-135-1750-S**	1.378	35.01	85.62	380.87	230.27	40.30
C0764-135-1875-M	0.764	19.41	0.135	3.43	1.875	47.63	1.412	35.87	1.397	35.49	112.97	502.51	244.19	42.73	**C0764-135-1875-S**	1.472	37.38	85.62	380.87	212.34	37.16
C0764-135-2000-M	0.764	19.41	0.135	3.43	2.000	50.80	1.501	38.13	1.484	37.69	112.97	502.51	226.54	39.65	**C0764-135-2000-S**	1.565	39.76	85.62	380.87	196.99	34.47
C0764-135-2125-M	0.764	19.41	0.135	3.43	2.125	53.98	1.590	40.39	1.571	39.90	112.97	502.51	211.28	36.97	**C0764-135-2125-S**	1.659	42.14	85.62	380.87	183.72	32.15
C0764-135-2250-M	0.764	19.41	0.135	3.43	2.250	57.15	1.679	42.65	1.657	42.10	112.97	502.51	197.94	34.64	**C0764-135-2250-S**	1.753	44.51	85.62	380.87	172.12	30.12
C0764-135-2375-M	0.764	19.41	0.135	3.43	2.375	60.33	1.768	44.91	1.744	44.30	112.97	502.51	186.19	32.58	**C0764-135-2375-S**	1.846	46.89	85.62	380.87	161.90	28.33
C0764-135-2500-M	0.764	19.41	0.135	3.43	2.500	63.50	1.857	47.17	1.831	46.51	112.97	502.51	175.75	30.76	**C0764-135-2500-S**	1.940	49.27	85.62	380.87	152.83	26.74
C0764-135-2625-M	0.764	19.41	0.135	3.43	2.625	66.68	1.946	49.43	1.918	48.71	112.97	502.51	166.42	29.12	**C0764-135-2625-S**	2.033	51.65	85.62	380.87	144.71	25.32
C0764-135-2750-M	0.764	19.41	0.135	3.43	2.750	69.85	2.035	51.69	2.004	50.91	112.97	502.51	158.03	27.66	**C0764-135-2750-S**	2.127	54.02	85.62	380.87	137.42	24.05
C0764-135-2875-M	0.764	19.41	0.135	3.43	2.875	73.03	2.124	53.95	2.091	53.12	112.97	502.51	150.45	26.33	**C0764-135-2875-S**	2.221	56.40	85.62	380.87	130.83	22.89
C0764-135-3000-M	0.764	19.41	0.135	3.43	3.000	76.20	2.213	56.21	2.178	55.32	112.97	502.51	143.56	25.12	**C0764-135-3000-S**	2.314	58.78	85.62	380.87	124.84	21.85

FOR INFORMATION ON ALTERNATIVE FINISHES, SEE PAGE 311

Part Numbers with an "*" are squared and not ground. **Part Numbers in bold** represent the newly expanded Associated Spring RAYMOND compression spring offering.

(OD) 0.764 - 0.813

MUSIC WIRE															STAINLESS STEEL						
Catalog #	Outside Diameter (OD)		Wire Diameter (d)		Free Length (L) Approx		Load Length (L_1)		Solid Height (Sh) Approx		Load (P) at L_1		Spring Rate (R)		Catalog #	Load Length (L_1)		Load (P) at L_1		Spring Rate (R)	
	in	mm	in	mm	in	mm	in	mm	in	mm	lb	N	lb/in	N/mm		in	mm	lb	N	lb/in	N/mm
C0764-135-3250-M	**0.764**	**19.41**	**0.135**	**3.43**	**3.250**	**82.55**	**2.391**	**60.73**	**2.351**	**59.73**	**112.97**	**502.51**	**131.52**	**23.02**	**C0764-135-3250-S**	**2.501**	**63.53**	**85.62**	**380.87**	**114.36**	**20.01**
C0764-135-3500-M	**0.764**	**19.41**	**0.135**	**3.43**	**3.500**	**88.90**	**2.569**	**65.25**	**2.525**	**64.13**	**112.97**	**502.51**	**121.34**	**21.23**	**C0764-135-3500-S**	**2.688**	**68.29**	**85.62**	**380.87**	**105.51**	**18.46**
C0764-135-3750-M	**0.764**	**19.41**	**0.135**	**3.43**	**3.750**	**95.25**	**2.747**	**69.77**	**2.698**	**68.54**	**112.97**	**502.51**	**112.62**	**19.71**	**C0764-135-3750-S**	**2.876**	**73.04**	**85.62**	**380.87**	**97.93**	**17.14**
C0764-135-4000-M	**0.764**	**19.41**	**0.135**	**3.43**	**4.000**	**101.60**	**2.925**	**74.29**	**2.872**	**72.95**	**112.97**	**502.51**	**105.07**	**18.39**	**C0764-135-4000-S**	**3.063**	**77.80**	**85.62**	**380.87**	**91.37**	**15.99**
C0764-135-4250-M	**0.764**	**19.41**	**0.135**	**3.43**	**4.250**	**107.95**	**3.103**	**78.81**	**3.045**	**77.35**	**112.97**	**502.51**	**98.47**	**17.23**	**C0764-135-4250-S**	**3.250**	**82.55**	**85.62**	**380.87**	**85.63**	**14.98**
C0764-135-4500-M	**0.764**	**19.41**	**0.135**	**3.43**	**4.500**	**114.30**	**3.281**	**83.33**	**3.219**	**81.76**	**112.97**	**502.51**	**92.65**	**16.21**	**C0764-135-4500-S**	**3.437**	**87.31**	**85.62**	**380.87**	**80.57**	**14.10**
C0764-135-4750-M	**0.764**	**19.41**	**0.135**	**3.43**	**4.750**	**120.65**	**3.459**	**87.85**	**3.392**	**86.17**	**112.97**	**502.51**	**87.48**	**15.31**	**C0764-135-4750-S**	**3.624**	**92.06**	**85.62**	**380.87**	**76.07**	**13.31**
C0764-135-5000-M	**0.764**	**19.41**	**0.135**	**3.43**	**5.000**	**127.00**	**3.637**	**92.37**	**3.566**	**90.57**	**112.97**	**502.51**	**82.86**	**14.50**	**C0764-135-5000-S**	**3.812**	**96.82**	**85.62**	**380.87**	**72.05**	**12.61**
C0764-135-5250-M	**0.764**	**19.41**	**0.135**	**3.43**	**5.250**	**133.35**	**3.815**	**96.89**	**3.739**	**94.98**	**112.97**	**502.51**	**78.70**	**13.77**	**C0764-135-5250-S**	**3.999**	**101.57**	**85.62**	**380.87**	**68.43**	**11.98**
C0764-135-5500-M	**0.764**	**19.41**	**0.135**	**3.43**	**5.500**	**139.70**	**3.992**	**101.41**	**3.913**	**99.38**	**112.97**	**502.51**	**74.94**	**13.11**	**C0764-135-5500-S**	**4.186**	**106.32**	**85.62**	**380.87**	**65.16**	**11.40**
C0764-135-5750-M	**0.764**	**19.41**	**0.135**	**3.43**	**5.750**	**146.05**	**4.170**	**105.93**	**4.086**	**103.79**	**112.97**	**502.51**	**71.52**	**12.52**	**C0764-135-5750-S**	**4.373**	**111.08**	**85.62**	**380.87**	**62.19**	**10.88**
C0764-135-6000-M	**0.764**	**19.41**	**0.135**	**3.43**	**6.000**	**152.40**	**4.348**	**110.45**	**4.260**	**108.20**	**112.97**	**502.51**	**68.40**	**11.97**	**C0764-135-6000-S**	**4.560**	**115.83**	**85.62**	**380.87**	**59.48**	**10.41**
C0764-135-6250-M	**0.764**	**19.41**	**0.135**	**3.43**	**6.250**	**158.75**	**4.526**	**114.97**	**4.433**	**112.60**	**112.97**	**502.51**	**65.54**	**11.47**	**C0764-135-6250-S**	**4.748**	**120.59**	**85.62**	**380.87**	**56.99**	**9.97**
C0764-135-6500-M	**0.764**	**19.41**	**0.135**	**3.43**	**6.500**	**165.10**	**4.704**	**119.49**	**4.607**	**117.01**	**112.97**	**502.51**	**62.91**	**11.01**	**C0764-135-6500-S**	**4.935**	**125.34**	**85.62**	**380.87**	**54.70**	**9.57**
C0764-135-6750-M	**0.764**	**19.41**	**0.135**	**3.43**	**6.750**	**171.45**	**4.882**	**124.01**	**4.780**	**121.42**	**112.97**	**502.51**	**60.48**	**10.58**	**C0764-135-6750-S**	**5.122**	**130.10**	**85.62**	**380.87**	**52.59**	**9.20**
C0764-135-7000-M	**0.764**	**19.41**	**0.135**	**3.43**	**7.000**	**177.80**	**5.060**	**128.53**	**4.954**	**125.82**	**112.97**	**502.51**	**58.24**	**10.19**	**C0764-135-7000-S**	**5.309**	**134.85**	**85.62**	**380.87**	**50.64**	**8.86**
C0764-135-7500-M	**0.764**	**19.41**	**0.135**	**3.43**	**7.500**	**190.50**	**5.416**	**137.57**	**5.301**	**134.64**	**112.97**	**502.51**	**54.21**	**9.49**	**C0764-135-7500-S**	**5.684**	**144.36**	**85.62**	**380.87**	**47.14**	**8.25**
C0764-135-8000-M	**0.764**	**19.41**	**0.135**	**3.43**	**8.000**	**203.20**	**5.772**	**146.61**	**5.648**	**143.45**	**112.97**	**502.51**	**50.70**	**8.87**	**C0764-135-8000-S**	**6.058**	**153.87**	**85.62**	**380.87**	**44.09**	**7.72**
C0764-135-8500-M	**0.764**	**19.41**	**0.135**	**3.43**	**8.500**	**215.90**	**6.128**	**155.64**	**5.995**	**152.26**	**112.97**	**502.51**	**47.62**	**8.33**	**C0764-135-8500-S**	**6.432**	**163.38**	**85.62**	**380.87**	**41.41**	**7.25**
C0764-135-9000-M	**0.764**	**19.41**	**0.135**	**3.43**	**9.000**	**228.60**	**6.484**	**164.68**	**6.342**	**161.08**	**112.97**	**502.51**	**44.89**	**7.86**	**C0764-135-9000-S**	**6.807**	**172.89**	**85.62**	**380.87**	**39.04**	**6.83**
C0764-135-9500-M	**0.764**	**19.41**	**0.135**	**3.43**	**9.500**	**241.30**	**6.840**	**173.72**	**6.689**	**169.89**	**112.97**	**502.51**	**42.46**	**7.43**	**C0764-135-9500-S**	**7.181**	**182.40**	**85.62**	**380.87**	**36.92**	**6.46**
C0764-148-1125-M	**0.764**	**19.41**	**0.148**	**3.76**	**1.125**	**28.58**	**0.966**	**24.53**	**0.937**	**23.81**	**116.63**	**518.79**	**731.68**	**128.04**	**C0764-148-1125-S**	**0.955**	**24.25**	**108.37**	**482.03**	**636.25**	**111.34**
C0764-148-1250-M	**0.764**	**19.41**	**0.148**	**3.76**	**1.250**	**31.75**	**1.065**	**27.04**	**1.032**	**26.21**	**117.84**	**524.16**	**635.81**	**111.27**	**C0764-148-1250-S**	**1.054**	**26.77**	**108.37**	**482.03**	**552.88**	**96.75**
C0764-148-1375-M	**0.764**	**19.41**	**0.148**	**3.76**	**1.375**	**34.93**	**1.164**	**29.56**	**1.126**	**28.61**	**118.76**	**528.28**	**562.16**	**98.38**	**C0764-148-1375-S**	**1.153**	**29.29**	**108.37**	**482.03**	**488.83**	**85.55**
C0764-148-1500-M	**0.764**	**19.41**	**0.148**	**3.76**	**1.500**	**38.10**	**1.263**	**32.08**	**1.221**	**31.01**	**119.50**	**531.54**	**503.79**	**88.16**	**C0764-148-1500-S**	**1.253**	**31.82**	**108.37**	**482.03**	**438.08**	**76.66**
C0764-148-1625-M	**0.764**	**19.41**	**0.148**	**3.76**	**1.625**	**41.28**	**1.362**	**34.59**	**1.315**	**33.41**	**120.09**	**534.20**	**456.41**	**79.87**	**C0764-148-1625-S**	**1.352**	**34.34**	**108.37**	**482.03**	**396.88**	**69.45**
C0764-148-1750-M	**0.764**	**19.41**	**0.148**	**3.76**	**1.750**	**44.45**	**1.461**	**37.11**	**1.410**	**35.81**	**120.59**	**536.39**	**417.17**	**73.00**	**C0764-148-1750-S**	**1.451**	**36.86**	**108.37**	**482.03**	**362.76**	**63.48**
C0764-148-1875-M	**0.764**	**19.41**	**0.148**	**3.76**	**1.875**	**47.63**	**1.560**	**39.62**	**1.504**	**38.21**	**121.00**	**538.24**	**384.15**	**67.23**	**C0764-148-1875-S**	**1.551**	**39.39**	**108.37**	**482.03**	**334.04**	**58.46**
C0764-148-2000-M	**0.764**	**19.41**	**0.148**	**3.76**	**2.000**	**50.80**	**1.659**	**42.14**	**1.599**	**40.61**	**121.36**	**539.82**	**355.97**	**62.29**	**C0764-148-2000-S**	**1.650**	**41.91**	**108.37**	**482.03**	**309.54**	**54.17**
C0764-148-2125-M	**0.764**	**19.41**	**0.148**	**3.76**	**2.125**	**53.98**	**1.758**	**44.66**	**1.693**	**43.01**	**121.66**	**541.18**	**331.64**	**58.04**	**C0764-148-2125-S**	**1.749**	**44.43**	**108.37**	**482.03**	**288.38**	**50.47**
C0764-148-2250-M	**0.764**	**19.41**	**0.148**	**3.76**	**2.250**	**57.15**	**1.857**	**47.17**	**1.788**	**45.41**	**121.93**	**542.36**	**310.42**	**54.32**	**C0764-148-2250-S**	**1.849**	**46.95**	**108.37**	**482.03**	**269.93**	**47.24**
C0764-148-2375-M	**0.764**	**19.41**	**0.148**	**3.76**	**2.375**	**60.33**	**1.956**	**49.69**	**1.882**	**47.81**	**122.16**	**543.41**	**291.76**	**51.06**	**C0764-148-2375-S**	**1.948**	**49.48**	**108.37**	**482.03**	**253.70**	**44.40**
C0764-148-2500-M	**0.764**	**19.41**	**0.148**	**3.76**	**2.500**	**63.50**	**2.055**	**52.21**	**1.977**	**50.21**	**122.37**	**544.34**	**275.21**	**48.16**	**C0764-148-2500-S**	**2.047**	**52.00**	**108.37**	**482.03**	**239.31**	**41.88**
C0764-148-2625-M	**0.764**	**19.41**	**0.148**	**3.76**	**2.625**	**66.68**	**2.154**	**54.72**	**2.071**	**52.61**	**122.56**	**545.16**	**260.44**	**45.58**	**C0764-148-2625-S**	**2.147**	**54.52**	**108.37**	**482.03**	**226.47**	**39.63**
C0764-148-2750-M	**0.764**	**19.41**	**0.148**	**3.76**	**2.750**	**69.85**	**2.253**	**57.24**	**2.166**	**55.01**	**122.72**	**545.90**	**247.17**	**43.26**	**C0764-148-2750-S**	**2.246**	**57.04**	**108.37**	**482.03**	**214.93**	**37.61**
C0764-148-2875-M	**0.764**	**19.41**	**0.148**	**3.76**	**2.875**	**73.03**	**2.261**	**57.43**	**2.260**	**57.41**	**144.39**	**642.29**	**235.19**	**41.16**	**C0764-148-2875-S**	**2.345**	**59.57**	**108.37**	**482.03**	**204.52**	**35.79**
C0764-148-3000-M	**0.764**	**19.41**	**0.148**	**3.76**	**3.000**	**76.20**	**2.356**	**59.85**	**2.355**	**59.81**	**144.39**	**642.29**	**224.32**	**39.26**	**C0764-148-3000-S**	**2.444**	**62.09**	**108.37**	**482.03**	**195.06**	**34.14**
C0764-148-3250-M	**0.764**	**19.41**	**0.148**	**3.76**	**3.250**	**82.55**	**2.547**	**64.69**	**2.544**	**64.61**	**144.39**	**642.29**	**205.34**	**35.93**	**C0764-148-3250-S**	**2.643**	**67.13**	**108.37**	**482.03**	**178.55**	**31.25**
C0764-148-3500-M	**0.764**	**19.41**	**0.148**	**3.76**	**3.500**	**88.90**	**2.737**	**69.53**	**2.733**	**69.41**	**144.39**	**642.29**	**189.32**	**33.13**	**C0764-148-3500-S**	**2.842**	**72.18**	**108.37**	**482.03**	**164.62**	**28.81**
C0764-148-3750-M	**0.764**	**19.41**	**0.148**	**3.76**	**3.750**	**95.25**	**2.928**	**74.37**	**2.922**	**74.21**	**144.39**	**642.29**	**175.61**	**30.73**	**C0764-148-3750-S**	**3.040**	**77.23**	**108.37**	**482.03**	**152.71**	**26.72**
C0764-148-4000-M	**0.764**	**19.41**	**0.148**	**3.76**	**4.000**	**101.60**	**3.118**	**79.20**	**3.111**	**79.01**	**144.39**	**642.29**	**163.76**	**28.66**	**C0764-148-4000-S**	**3.239**	**82.27**	**108.37**	**482.03**	**142.40**	**24.92**
C0764-148-4250-M	**0.764**	**19.41**	**0.148**	**3.76**	**4.250**	**107.95**	**3.309**	**84.04**	**3.300**	**83.81**	**144.39**	**642.29**	**153.41**	**26.85**	**C0764-148-4250-S**	**3.438**	**87.32**	**108.37**	**482.03**	**133.40**	**23.34**
C0764-148-4500-M	**0.764**	**19.41**	**0.148**	**3.76**	**4.500**	**114.30**	**3.499**	**88.88**	**3.489**	**88.61**	**144.39**	**642.29**	**144.28**	**25.25**	**C0764-148-4500-S**	**3.636**	**92.36**	**108.37**	**482.03**	**125.46**	**21.96**
C0764-148-4750-M	**0.764**	**19.41**	**0.148**	**3.76**	**4.750**	**120.65**	**3.690**	**93.72**	**3.678**	**93.41**	**144.39**	**642.29**	**136.18**	**23.83**	**C0764-148-4750-S**	**3.835**	**97.41**	**108.37**	**482.03**	**118.42**	**20.72**
C0764-148-5000-M	**0.764**	**19.41**	**0.148**	**3.76**	**5.000**	**127.00**	**3.880**	**98.56**	**3.867**	**98.21**	**144.39**	**642.29**	**128.95**	**22.57**	**C0764-148-5000-S**	**4.034**	**102.45**	**108.37**	**482.03**	**112.13**	**19.62**
C0764-148-5250-M	**0.764**	**19.41**	**0.148**	**3.76**	**5.250**	**133.35**	**4.071**	**103.40**	**4.056**	**103.02**	**144.39**	**642.29**	**122.44**	**21.43**	**C0764-148-5250-S**	**4.232**	**107.50**	**108.37**	**482.03**	**106.47**	**18.63**
C0764-148-5500-M	**0.764**	**19.41**	**0.148**	**3.76**	**5.500**	**139.70**	**4.261**	**108.23**	**4.245**	**107.82**	**144.39**	**642.29**	**116.56**	**20.40**	**C0764-148-5500-S**	**4.431**	**112.54**	**108.37**	**482.03**	**101.35**	**17.74**
C0764-148-5750-M	**0.764**	**19.41**	**0.148**	**3.76**	**5.750**	**146.05**	**4.452**	**113.07**	**4.434**	**112.62**	**144.39**	**642.29**	**111.22**	**19.46**	**C0764-148-5750-S**	**4.629**	**117.59**	**108.37**	**482.03**	**96.71**	**16.92**
C0764-148-6000-M	**0.764**	**19.41**	**0.148**	**3.76**	**6.000**	**152.40**	**4.642**	**117.91**	**4.623**	**117.42**	**144.39**	**642.29**	**106.34**	**18.61**	**C0764-148-6000-S**	**4.828**	**122.63**	**108.37**	**482.03**	**92.47**	**16.18**
C0764-148-6250-M	**0.764**	**19.41**	**0.148**	**3.76**	**6.250**	**158.75**	**4.833**	**122.75**	**4.812**	**122.22**	**144.39**	**642.29**	**101.88**	**17.83**	**C0764-148-6250-S**	**5.027**	**127.68**	**108.37**	**482.03**	**88.59**	**15.50**
C0764-148-6500-M	**0.764**	**19.41**	**0.148**	**3.76**	**6.500**	**165.10**	**5.023**	**127.59**	**5.001**	**127.02**	**144.39**	**642.29**	**97.77**	**17.11**	**C0764-148-6500-S**	**5.225**	**132.72**	**108.37**	**482.03**	**85.02**	**14.88**
C0764-148-6750-M	**0.764**	**19.41**	**0.148**	**3.76**	**6.750**	**171.45**	**5.214**	**132.43**	**5.190**	**131.82**	**144.39**	**642.29**	**93.98**	**16.45**	**C0764-148-6750-S**	**5.424**	**137.77**	**108.37**	**482.03**	**81.72**	**14.30**
C0764-148-7000-M	**0.764**	**19.41**	**0.148**	**3.76**	**7.000**	**177.80**	**5.404**	**137.26**	**5.379**	**136.62**	**144.39**	**642.29**	**90.48**	**15.83**	**C0764-148-7000-S**	**5.623**	**142.82**	**108.37**	**482.03**	**78.68**	**13.77**
C0764-148-7500-M	**0.764**	**19.41**	**0.148**	**3.76**	**7.500**	**190.50**	**5.785**	**146.94**	**5.757**	**146.22**	**144.39**	**642.29**	**84.20**	**14.73**	**C0764-148-7500-S**	**6.020**	**152.91**	**108.37**	**482.03**	**73.22**	**12.81**
C0764-148-8000-M	**0.764**	**19.41**	**0.148**	**3.76**	**8.000**	**203.20**	**6.166**	**156.62**	**6.135**	**155.82**	**144.39**	**642.29**	**78.73**	**13.78**	**C0764-148-8000-S**	**6.417**	**163.00**	**108.37**	**482.03**	**68.46**	**11.98**
C0764-148-8500-M	**0.764**	**19.41**	**0.148**	**3.76**	**8.500**	**215.90**	**6.547**	**166.29**	**6.513**	**165.42**	**144.39**	**642.29**	**73.94**	**12.94**	**C0764-148-8500-S**	**6.814**	**173.09**	**108.37**	**482.03**	**64.29**	**11.25**
C0764-148-9000-M	**0.764**	**19.41**	**0.148**	**3.76**	**9.000**	**228.60**	**6.928**	**175.97**	**6.890**	**175.02**	**144.39**	**642.29**	**69.69**	**12.20**	**C0764-148-9000-S**	**7.212**	**183.18**	**108.37**	**482.03**	**60.60**	**10.60**
C0764-148-9500-M	**0.764**	**19.41**	**0.148**	**3.76**	**9.500**	**241.30**	**7.309**	**185.65**	**7.268**	**184.62**	**144.39**	**642.29**	**65.90**	**11.53**	**C0764-148-9500-S**	**7.609**	**193.27**	**108.37**	**482.03**	**57.31**	**10.03**
D13230	0.787	20.00	0.110	2.80	1.071	27.20	0.646	16.40	0.606	15.40	85.32	379.52	200.63	35.11	D23230	0.646	16.40	71.10	316.27	167.14	29.25
D13240	0.787	20.00	0.110	2.80	1.555	39.50	0.886	22.50	0.827	21.00	85.32	379.52	127.77	22.36	D23240	0.886	22.50	71.10	316.27	106.46	18.63
D13250	0.787	20.00	0.110	2.80	2.528	64.20	1.374	34.90	1.268	32.20	85.32	379.52	73.94	12.94	D23250	1.374	34.90	71.10	316.27	61.60	10.78
C0813-135-1500-M	**0.813**	**20.65**	**0.135**	**3.43**	**1.500**	**38.10**	**1.146**	**29.11**	**0.970**	**24.63**	**111.95**	**497.96**	**316.43**	**55.38**	**C0813-135-1500-S**	**1.192**	**30.28**	**81.14**	**360.91**	**263.59**	**46.13**
C0813-135-1750-M	**0.813**	**20.65**	**0.135**	**3.43**	**1.750**	**44.45**	**1.324**	**33.64**	**1.109**	**28.18**	**111.95**	**497.96**	**262.98**	**46.02**	**C0813-135-1750-S**	**1.380**	**35.04**	**81.14**	**360.91**	**219.06**	**38.34**
C0813-135-2000-M	**0.813**	**20.65**	**0.135**	**3.43**	**2.000**	**50.80**	**1.502**	**38.16**	**1.249**	**31.72**	**111.95**	**497.96**	**224.97**	**39.37**	**C0813-135-2000-S**	**1.567**	**39.80**	**81.14**	**360.91**	**187.40**	**32.80**

Part Numbers with an "*" are squared and not ground. **Part Numbers in bold** represent the newly expanded Associated Spring RAYMOND compression spring offering.

MUSIC WIRE															STAINLESS STEEL					
Catalog #	Outside Diameter (OD)		Wire Diameter (d)		Free Length (L) Approx		Load Length (L_1)		Solid Height (Sh) Approx		Load (P) at L_1		Spring Rate (R)		Catalog #	Load Length (L_1)		Load (P) at L_1		Spring Rate (R)	
	in	mm	in	mm	in	mm	in	mm	in	mm	lb	N	lb/in	N/mm		in	mm	lb	N	lb/in	N/mm
C0813-135-2250-M	0.813	20.65	0.135	3.43	2.250	57.15	1.681	42.68	1.388	35.26	111.95	497.96	196.57	34.40	**C0813-135-2250-S**	1.754	44.56	81.14	360.91	163.74	28.66
C0813-135-2500-M	0.813	20.65	0.135	3.43	2.500	63.50	1.859	47.21	1.528	38.80	111.95	497.96	174.53	30.54	**C0813-135-2500-S**	1.942	49.32	81.14	360.91	145.38	25.44
C0813-135-3000-M	0.813	20.65	0.135	3.43	3.000	76.20	2.215	56.26	1.807	45.89	111.95	497.96	142.57	24.95	**C0813-135-3000-S**	2.317	58.85	81.14	360.91	118.76	20.78
C0813-135-3500-M	0.813	20.65	0.135	3.43	3.500	88.90	2.571	65.30	2.086	52.98	111.95	497.96	120.50	21.09	**C0813-135-3500-S**	2.692	68.37	81.14	360.91	100.38	17.57
C0813-135-3750-M	0.813	20.65	0.135	3.43	3.750	95.25	2.749	69.83	2.225	56.52	111.95	497.96	111.84	19.57	**C0813-135-3750-S**	2.879	73.13	81.14	360.91	93.16	16.30
C0813-135-4000-M	0.813	20.65	0.135	3.43	4.000	101.60	2.927	74.35	2.365	60.06	111.95	497.96	104.34	18.26	**C0813-135-4000-S**	3.066	77.89	81.14	360.91	86.92	15.21
C0823-068-1500-M	0.823	20.90	0.068	1.73	1.500	38.10	0.578	14.68	0.436	11.07	16.03	71.33	17.39	3.04	**C0823-068-1500-S**	0.660	16.77	12.70	56.48	15.12	2.65
C0823-068-1625-M	0.823	20.90	0.068	1.73	1.625	41.28	0.618	15.71	0.463	11.76	16.03	71.33	15.93	2.79	**C0823-068-1625-S**	0.708	18.00	12.70	56.48	13.85	2.42
C0823-068-1750-M	0.823	20.90	0.068	1.73	1.750	44.45	0.659	16.74	0.490	12.44	16.03	71.33	14.70	2.57	**C0823-068-1750-S**	0.757	19.22	12.70	56.48	12.78	2.24
C0823-068-1875-M	0.823	20.90	0.068	1.73	1.875	47.63	0.699	17.77	0.517	13.12	16.03	71.33	13.64	2.39	**C0823-068-1875-S**	0.805	20.44	12.70	56.48	11.86	2.08
C0823-068-2000-M	0.823	20.90	0.068	1.73	2.000	50.80	0.740	18.80	0.544	13.80	16.03	71.33	12.73	2.23	**C0823-068-2000-S**	0.853	21.66	12.70	56.48	11.07	1.94
C0823-068-2125-M	0.823	20.90	0.068	1.73	2.125	53.98	0.780	19.82	0.570	14.49	16.03	71.33	11.93	2.09	**C0823-068-2125-S**	0.901	22.88	12.70	56.48	10.37	1.81
C0823-068-2250-M	0.823	20.90	0.068	1.73	2.250	57.15	0.821	20.85	0.597	15.17	16.03	71.33	11.22	1.96	**C0823-068-2250-S**	0.949	24.10	12.70	56.48	9.76	1.71
C0823-068-2375-M	0.823	20.90	0.068	1.73	2.375	60.33	0.861	21.88	0.624	15.85	16.03	71.33	10.59	1.85	**C0823-068-2375-S**	0.997	25.32	12.70	56.48	9.21	1.61
C0823-068-2500-M	0.823	20.90	0.068	1.73	2.500	63.50	0.902	22.91	0.651	16.54	16.03	71.33	10.03	1.76	**C0823-068-2500-S**	1.045	26.54	12.70	56.48	8.73	1.53
C0823-068-2625-M	0.823	20.90	0.068	1.73	2.625	66.68	0.942	23.94	0.678	17.22	16.03	71.33	9.53	1.67	**C0823-068-2625-S**	1.093	27.76	12.70	56.48	8.29	1.45
C0823-068-2750-M	0.823	20.90	0.068	1.73	2.750	69.85	0.983	24.97	0.705	17.90	16.03	71.33	9.07	1.59	**C0823-068-2750-S**	1.141	28.98	12.70	56.48	7.89	1.38
C0823-068-2875-M	0.823	20.90	0.068	1.73	2.875	73.03	1.023	26.00	0.732	18.58	16.03	71.33	8.66	1.52	**C0823-068-2875-S**	1.189	30.20	12.70	56.48	7.53	1.32
C0823-068-3000-M	0.823	20.90	0.068	1.73	3.000	76.20	1.064	27.03	0.758	19.27	16.03	71.33	8.28	1.45	**C0823-068-3000-S**	1.237	31.42	12.70	56.48	7.20	1.26
C0823-068-3250-M	0.823	20.90	0.068	1.73	3.250	82.55	1.145	29.08	0.812	20.63	16.03	71.33	7.62	1.33	**C0823-068-3250-S**	1.333	33.86	12.70	56.48	6.62	1.16
C0823-068-3500-M	0.823	20.90	0.068	1.73	3.500	88.90	1.226	31.14	0.866	22.00	16.03	71.33	7.05	1.23	**C0823-068-3500-S**	1.429	36.31	12.70	56.48	6.13	1.07
C0823-068-3750-M	0.823	20.90	0.068	1.73	3.750	95.25	1.307	33.20	0.920	23.36	16.03	71.33	6.56	1.15	**C0823-068-3750-S**	1.525	38.75	12.70	56.48	5.71	1.00
C0823-068-4000-M	0.823	20.90	0.068	1.73	4.000	101.60	1.388	35.26	0.973	24.73	16.03	71.33	6.14	1.07	**C0823-068-4000-S**	1.622	41.19	12.70	56.48	5.34	0.93
C0823-068-4250-M	0.823	20.90	0.068	1.73	4.250	107.95	1.469	37.31	1.027	26.09	16.03	71.33	5.77	1.01	**C0823-068-4250-S**	1.718	43.63	12.70	56.48	5.01	0.88
C0823-068-4500-M	0.823	20.90	0.068	1.73	4.500	114.30	1.550	39.37	1.081	27.46	16.03	71.33	5.44	0.95	**C0823-068-4500-S**	1.814	46.07	12.70	56.48	4.73	0.83
C0823-068-4750-M	0.823	20.90	0.068	1.73	4.750	120.65	1.631	41.43	1.135	28.82	16.03	71.33	5.14	0.90	**C0823-068-4750-S**	1.910	48.51	12.70	56.48	4.47	0.78
C0823-068-5000-M	0.823	20.90	0.068	1.73	5.000	127.00	1.712	43.49	1.188	30.19	16.03	71.33	4.88	0.85	**C0823-068-5000-S**	2.006	50.95	12.70	56.48	4.24	0.74
C0823-068-5250-M	0.823	20.90	0.068	1.73	5.250	133.35	1.793	45.54	1.242	31.55	16.03	71.33	4.64	0.81	**C0823-068-5250-S**	2.102	53.40	12.70	56.48	4.03	0.71
C0823-068-5500-M	0.823	20.90	0.068	1.73	5.500	139.70	1.874	47.60	1.296	32.92	16.03	71.33	4.42	0.77	**C0823-068-5500-S**	2.198	55.84	12.70	56.48	3.85	0.67
C0823-068-5750-M	0.823	20.90	0.068	1.73	5.750	146.05	1.955	49.66	1.350	34.28	16.03	71.33	4.23	0.74	**C0823-068-5750-S**	2.294	58.28	12.70	56.48	3.67	0.64
C0823-068-6000-M	0.823	20.90	0.068	1.73	6.000	152.40	2.036	51.72	1.403	35.65	16.03	71.33	4.05	0.71	**C0823-068-6000-S**	2.391	60.72	12.70	56.48	3.52	0.62
C0823-068-6250-M	0.823	20.90	0.068	1.73	6.250	158.75	2.117	53.77	1.457	37.01	16.03	71.33	3.88	0.68	**C0823-068-6250-S**	2.487	63.16	12.70	56.48	3.37	0.59
C0823-068-6500-M	0.823	20.90	0.068	1.73	6.500	165.10	2.198	55.83	1.511	38.38	16.03	71.33	3.73	0.65	**C0823-068-6500-S**	2.583	65.60	12.70	56.48	3.24	0.57
C0823-068-6750-M	0.823	20.90	0.068	1.73	6.750	171.45	2.279	57.89	1.565	39.74	16.03	71.33	3.59	0.63	**C0823-068-6750-S**	2.679	68.04	12.70	56.48	3.12	0.55
C0823-068-7000-M	0.823	20.90	0.068	1.73	7.000	177.80	2.360	59.95	1.618	41.11	16.03	71.33	3.46	0.60	**C0823-068-7000-S**	2.775	70.49	12.70	56.48	3.01	0.53
C0823-068-7500-M	0.823	20.90	0.068	1.73	7.500	190.50	2.522	64.06	1.726	43.84	16.03	71.33	3.22	0.56	**C0823-068-7500-S**	2.967	75.37	12.70	56.48	2.80	0.49
C0823-068-8000-M	0.823	20.90	0.068	1.73	8.000	203.20	2.684	68.18	1.833	46.57	16.03	71.33	3.02	0.53	**C0823-068-8000-S**	3.159	80.25	12.70	56.48	2.62	0.46
C0823-068-8500-M	0.823	20.90	0.068	1.73	8.500	215.90	2.846	72.29	1.941	49.30	16.03	71.33	2.84	0.50	**C0823-068-8500-S**	3.352	85.13	12.70	56.48	2.47	0.43
C0823-068-9000-M	0.823	20.90	0.068	1.73	9.000	228.60	3.008	76.41	2.048	52.03	16.03	71.33	2.68	0.47	**C0823-068-9000-S**	3.544	90.02	12.70	56.48	2.33	0.41
C0823-068-9500-M	0.823	20.90	0.068	1.73	9.500	241.30	3.170	80.52	2.156	54.76	16.03	71.33	2.53	0.44	**C0823-068-9500-S**	3.736	94.90	12.70	56.48	2.20	0.39
C0823-072-1500-M	0.823	20.90	0.072	1.83	1.500	38.10	0.611	15.53	0.477	12.12	18.80	83.63	21.16	3.70	**C0823-072-1500-S**	0.692	17.58	14.86	66.10	18.40	3.22
C0823-072-1625-M	0.823	20.90	0.072	1.83	1.625	41.28	0.654	16.62	0.507	12.88	18.80	83.63	19.37	3.39	**C0823-072-1625-S**	0.743	18.87	14.86	66.10	16.84	2.95
C0823-072-1750-M	0.823	20.90	0.072	1.83	1.750	44.45	0.697	17.71	0.537	13.65	18.80	83.63	17.86	3.13	**C0823-072-1750-S**	0.793	20.15	14.86	66.10	15.53	2.72
C0823-072-1875-M	0.823	20.90	0.072	1.83	1.875	47.63	0.740	18.81	0.567	14.41	18.80	83.63	16.57	2.90	**C0823-072-1875-S**	0.844	21.43	14.86	66.10	14.41	2.52
C0823-072-2000-M	0.823	20.90	0.072	1.83	2.000	50.80	0.784	19.90	0.597	15.17	18.80	83.63	15.46	2.70	**C0823-072-2000-S**	0.894	22.72	14.86	66.10	13.44	2.35
C0823-072-2125-M	0.823	20.90	0.072	1.83	2.125	53.98	0.827	21.00	0.627	15.94	18.80	83.63	14.48	2.53	**C0823-072-2125-S**	0.945	24.00	14.86	66.10	12.59	2.20
C0823-072-2250-M	0.823	20.90	0.072	1.83	2.250	57.15	0.870	22.09	0.657	16.70	18.80	83.63	13.62	2.38	**C0823-072-2250-S**	0.995	25.28	14.86	66.10	11.84	2.07
C0823-072-2375-M	0.823	20.90	0.072	1.83	2.375	60.33	0.913	23.18	0.687	17.46	18.80	83.63	12.86	2.25	**C0823-072-2375-S**	1.046	26.57	14.86	66.10	11.18	1.96
C0823-072-2500-M	0.823	20.90	0.072	1.83	2.500	63.50	0.956	24.28	0.718	18.22	18.80	83.63	12.18	2.13	**C0823-072-2500-S**	1.096	27.85	14.86	66.10	10.59	1.85
C0823-072-2625-M	0.823	20.90	0.072	1.83	2.625	66.68	0.999	25.37	0.748	18.99	18.80	83.63	11.56	2.02	**C0823-072-2625-S**	1.147	29.13	14.86	66.10	10.05	1.76
C0823-072-2750-M	0.823	20.90	0.072	1.83	2.750	69.85	1.042	26.47	0.778	19.75	18.80	83.63	11.01	1.93	**C0823-072-2750-S**	1.198	30.42	14.86	66.10	9.57	1.68
C0823-072-2875-M	0.823	20.90	0.072	1.83	2.875	73.03	1.085	27.56	0.808	20.51	18.80	83.63	10.50	1.84	**C0823-072-2875-S**	1.248	31.70	14.86	66.10	9.13	1.60
C0823-072-3000-M	0.823	20.90	0.072	1.83	3.000	76.20	1.128	28.65	0.838	21.28	18.80	83.63	10.04	1.76	**C0823-072-3000-S**	1.299	32.98	14.86	66.10	8.73	1.53
C0823-072-3250-M	0.823	20.90	0.072	1.83	3.250	82.55	1.214	30.84	0.898	22.80	18.80	83.63	9.24	1.62	**C0823-072-3250-S**	1.400	35.55	14.86	66.10	8.03	1.41
C0823-072-3500-M	0.823	20.90	0.072	1.83	3.500	88.90	1.300	33.03	0.958	24.33	18.80	83.63	8.55	1.50	**C0823-072-3500-S**	1.501	38.12	14.86	66.10	7.43	1.30
C0823-072-3750-M	0.823	20.90	0.072	1.83	3.750	95.25	1.387	35.22	1.018	25.86	18.80	83.63	7.96	1.39	**C0823-072-3750-S**	1.602	40.69	14.86	66.10	6.92	1.21
C0823-072-4000-M	0.823	20.90	0.072	1.83	4.000	101.60	1.473	37.41	1.078	27.38	18.80	83.63	7.44	1.30	**C0823-072-4000-S**	1.703	43.25	14.86	66.10	6.47	1.13
C0823-072-4250-M	0.823	20.90	0.072	1.83	4.250	107.95	1.559	39.59	1.138	28.91	18.80	83.63	6.99	1.22	**C0823-072-4250-S**	1.804	45.82	14.86	66.10	6.08	1.06
C0823-072-4500-M	0.823	20.90	0.072	1.83	4.500	114.30	1.645	41.78	1.198	30.44	18.80	83.63	6.59	1.15	**C0823-072-4500-S**	1.905	48.39	14.86	66.10	5.73	1.00
C0823-072-4750-M	0.823	20.90	0.072	1.83	4.750	120.65	1.731	43.97	1.258	31.96	18.80	83.63	6.23	1.09	**C0823-072-4750-S**	2.006	50.96	14.86	66.10	5.42	0.95
C0823-072-5000-M	0.823	20.90	0.072	1.83	5.000	127.00	1.817	46.16	1.318	33.49	18.80	83.63	5.91	1.03	**C0823-072-5000-S**	2.107	53.52	14.86	66.10	5.14	0.90
C0823-072-5250-M	0.823	20.90	0.072	1.83	5.250	133.35	1.903	48.35	1.379	35.01	18.80	83.63	5.62	0.98	**C0823-072-5250-S**	2.208	56.09	14.86	66.10	4.89	0.85
C0823-072-5500-M	0.823	20.90	0.072	1.83	5.500	139.70	1.990	50.54	1.439	36.54	18.80	83.63	5.36	0.94	**C0823-072-5500-S**	2.309	58.66	14.86	66.10	4.66	0.81
C0823-072-5750-M	0.823	20.90	0.072	1.83	5.750	146.05	2.076	52.72	1.499	38.07	18.80	83.63	5.12	0.90	**C0823-072-5750-S**	2.410	61.22	14.86	66.10	4.45	0.78

FOR INFORMATION ON ALTERNATIVE FINISHES, SEE PAGE 311

Part Numbers with an "*" are squared and not ground. **Part Numbers in bold** represent the newly expanded Associated Spring RAYMOND compression spring offering.

(OD) 0.823 - 0.823

MUSIC WIRE															STAINLESS STEEL						
Catalog #	Outside Diameter (OD)		Wire Diameter (d)		Free Length (L) Approx		Load Length (L_1)		Solid Height (Sh) Approx		Load (P) at L_1		Spring Rate (R)		Catalog #	Load Length (L_1)		Load (P) at L_1		Spring Rate (R)	
	in	mm	in	mm	in	mm	in	mm	in	mm	lb	N	lb/in	N/mm		in	mm	lb	N	lb/in	N/mm
C0823-072-6000-M	0.823	20.90	0.072	1.83	6.000	152.40	2.162	54.91	1.559	39.59	18.80	83.63	4.90	0.86	**C0823-072-6000-S**	2.511	63.79	14.86	66.10	4.26	0.75
C0823-072-6250-M	0.823	20.90	0.072	1.83	6.250	158.75	2.248	57.10	1.619	41.12	18.80	83.63	4.70	0.82	**C0823-072-6250-S**	2.613	66.36	14.86	66.10	4.09	0.71
C0823-072-6500-M	0.823	20.90	0.072	1.83	6.500	165.10	2.334	59.29	1.679	42.65	18.80	83.63	4.51	0.79	**C0823-072-6500-S**	2.714	68.93	14.86	66.10	3.92	0.69
C0823-072-6750-M	0.823	20.90	0.072	1.83	6.750	171.45	2.420	61.48	1.739	44.17	18.80	83.63	4.34	0.76	**C0823-072-6750-S**	2.815	71.49	14.86	66.10	3.78	0.66
C0823-072-7000-M	0.823	20.90	0.072	1.83	7.000	177.80	2.506	63.66	1.799	45.70	18.80	83.63	4.18	0.73	**C0823-072-7000-S**	2.916	74.06	14.86	66.10	3.64	0.64
C0823-072-7500-M	0.823	20.90	0.072	1.83	7.500	190.50	2.679	68.04	1.919	48.75	18.80	83.63	3.90	0.68	**C0823-072-7500-S**	3.118	79.19	14.86	66.10	3.39	0.59
C0823-072-8000-M	0.823	20.90	0.072	1.83	8.000	203.20	2.851	72.42	2.040	51.80	18.80	83.63	3.65	0.64	**C0823-072-8000-S**	3.320	84.33	14.86	66.10	3.18	0.56
C0823-072-8500-M	0.823	20.90	0.072	1.83	8.500	215.90	3.023	76.79	2.160	54.86	18.80	83.63	3.43	0.60	**C0823-072-8500-S**	3.522	89.46	14.86	66.10	2.99	0.52
C0823-072-9000-M	0.823	20.90	0.072	1.83	9.000	228.60	3.196	81.17	2.280	57.91	18.80	83.63	3.24	0.57	**C0823-072-9000-S**	3.724	94.60	14.86	66.10	2.82	0.49
C0823-072-9500-M	0.823	20.90	0.072	1.83	9.500	241.30	3.368	85.55	2.400	60.96	18.80	83.63	3.07	0.54	**C0823-072-9500-S**	3.926	99.73	14.86	66.10	2.67	0.47
C0823-085-1375-M	0.823	20.90	0.085	2.16	1.375	34.93	0.670	17.01	0.573	14.55	29.81	132.58	42.27	7.40	**C0823-085-1375-S**	0.739	18.76	23.39	104.05	36.76	6.43
C0823-085-1500-M	0.823	20.90	0.085	2.16	1.500	38.10	0.722	18.33	0.614	15.58	29.81	132.58	38.30	6.70	**C0823-085-1500-S**	0.798	20.26	23.39	104.05	33.30	5.83
C0823-085-1625-M	0.823	20.90	0.085	2.16	1.625	41.28	0.774	19.65	0.654	16.62	29.81	132.58	35.01	6.13	**C0823-085-1625-S**	0.857	21.76	23.39	104.05	30.44	5.33
C0823-085-1750-M	0.823	20.90	0.085	2.16	1.750	44.45	0.825	20.97	0.695	17.66	29.81	132.58	32.24	5.64	**C0823-085-1750-S**	0.916	23.25	23.39	104.05	28.03	4.91
C0823-085-1875-M	0.823	20.90	0.085	2.16	1.875	47.63	0.877	22.28	0.736	18.70	29.81	132.58	29.87	5.23	**C0823-085-1875-S**	0.974	24.75	23.39	104.05	25.98	4.55
C0823-085-2000-M	0.823	20.90	0.085	2.16	2.000	50.80	0.929	23.60	0.777	19.74	29.81	132.58	27.83	4.87	**C0823-085-2000-S**	1.033	26.25	23.39	104.05	24.20	4.24
C0823-085-2125-M	0.823	20.90	0.085	2.16	2.125	53.98	0.981	24.92	0.818	20.78	29.81	132.58	26.05	4.56	**C0823-085-2125-S**	1.092	27.75	23.39	104.05	22.66	3.96
C0823-085-2250-M	0.823	20.90	0.085	2.16	2.250	57.15	1.033	26.23	0.859	21.82	29.81	132.58	24.49	4.29	**C0823-085-2250-S**	1.151	29.25	23.39	104.05	21.29	3.73
C0823-085-2375-M	0.823	20.90	0.085	2.16	2.375	60.33	1.085	27.55	0.900	22.86	29.81	132.58	23.10	4.04	**C0823-085-2375-S**	1.210	30.74	23.39	104.05	20.09	3.52
C0823-085-2500-M	0.823	20.90	0.085	2.16	2.500	63.50	1.137	28.87	0.941	23.89	29.81	132.58	21.86	3.83	**C0823-085-2500-S**	1.269	32.24	23.39	104.05	19.01	3.33
C0823-085-2625-M	0.823	20.90	0.085	2.16	2.625	66.68	1.188	30.18	0.982	24.93	29.81	132.58	20.75	3.63	**C0823-085-2625-S**	1.328	33.74	23.39	104.05	18.04	3.16
C0823-085-2750-M	0.823	20.90	0.085	2.16	2.750	69.85	1.240	31.50	1.022	25.97	29.81	132.58	19.74	3.45	**C0823-085-2750-S**	1.387	35.24	23.39	104.05	17.17	3.00
C0823-085-2875-M	0.823	20.90	0.085	2.16	2.875	73.03	1.292	32.82	1.063	27.01	29.81	132.58	18.83	3.30	**C0823-085-2875-S**	1.446	36.74	23.39	104.05	16.37	2.87
C0823-085-3000-M	0.823	20.90	0.085	2.16	3.000	76.20	1.344	34.14	1.104	28.05	29.81	132.58	18.00	3.15	**C0823-085-3000-S**	1.505	38.23	23.39	104.05	15.65	2.74
C0823-085-3250-M	0.823	20.90	0.085	2.16	3.250	82.55	1.448	36.77	1.186	30.13	29.81	132.58	16.54	2.89	**C0823-085-3250-S**	1.623	41.23	23.39	104.05	14.38	2.52
C0823-085-3500-M	0.823	20.90	0.085	2.16	3.500	88.90	1.551	39.40	1.268	32.20	29.81	132.58	15.30	2.68	**C0823-085-3500-S**	1.741	44.23	23.39	104.05	13.30	2.33
C0823-085-3750-M	0.823	20.90	0.085	2.16	3.750	95.25	1.655	42.04	1.350	34.28	29.81	132.58	14.23	2.49	**C0823-085-3750-S**	1.859	47.22	23.39	104.05	12.37	2.17
C0823-085-4000-M	0.823	20.90	0.085	2.16	4.000	101.60	1.759	44.67	1.431	36.36	29.81	132.58	13.30	2.33	**C0823-085-4000-S**	1.977	50.22	23.39	104.05	11.56	2.02
C0823-085-4250-M	0.823	20.90	0.085	2.16	4.250	107.95	1.862	47.31	1.513	38.43	29.81	132.58	12.48	2.18	**C0823-085-4250-S**	2.095	53.22	23.39	104.05	10.86	1.90
C0823-085-4500-M	0.823	20.90	0.085	2.16	4.500	114.30	1.966	49.94	1.595	40.51	29.81	132.58	11.76	2.06	**C0823-085-4500-S**	2.213	56.21	23.39	104.05	10.23	1.79
C0823-085-4750-M	0.823	20.90	0.085	2.16	4.750	120.65	2.070	52.57	1.677	42.59	29.81	132.58	11.12	1.95	**C0823-085-4750-S**	2.331	59.21	23.39	104.05	9.67	1.69
C0823-085-5000-M	0.823	20.90	0.085	2.16	5.000	127.00	2.174	55.21	1.759	44.67	29.81	132.58	10.55	1.85	**C0823-085-5000-S**	2.449	62.20	23.39	104.05	9.17	1.60
C0823-085-5250-M	0.823	20.90	0.085	2.16	5.250	133.35	2.277	57.84	1.840	46.74	29.81	132.58	10.03	1.75	**C0823-085-5250-S**	2.567	65.20	23.39	104.05	8.72	1.53
C0823-085-5500-M	0.823	20.90	0.085	2.16	5.500	139.70	2.381	60.48	1.922	48.82	29.81	132.58	9.56	1.67	**C0823-085-5500-S**	2.685	68.20	23.39	104.05	8.31	1.45
C0823-085-5750-M	0.823	20.90	0.085	2.16	5.750	146.05	2.485	63.11	2.004	50.90	29.81	132.58	9.13	1.60	**C0823-085-5750-S**	2.803	71.19	23.39	104.05	7.94	1.39
C0823-085-6000-M	0.823	20.90	0.085	2.16	6.000	152.40	2.588	65.75	2.086	52.98	29.81	132.58	8.74	1.53	**C0823-085-6000-S**	2.921	74.19	23.39	104.05	7.60	1.33
C0823-085-6250-M	0.823	20.90	0.085	2.16	6.250	158.75	2.692	68.38	2.167	55.05	29.81	132.58	8.38	1.47	**C0823-085-6250-S**	3.039	77.18	23.39	104.05	7.29	1.27
C0823-085-6500-M	0.823	20.90	0.085	2.16	6.500	165.10	2.796	71.01	2.249	57.13	29.81	132.58	8.05	1.41	**C0823-085-6500-S**	3.157	80.18	23.39	104.05	7.00	1.22
C0823-085-6750-M	0.823	20.90	0.085	2.16	6.750	171.45	2.899	73.65	2.331	59.21	29.81	132.58	7.74	1.35	**C0823-085-6750-S**	3.275	83.18	23.39	104.05	6.73	1.18
C0823-085-7000-M	0.823	20.90	0.085	2.16	7.000	177.80	3.003	76.28	2.413	61.28	29.81	132.58	7.46	1.30	**C0823-085-7000-S**	3.393	86.17	23.39	104.05	6.49	1.13
C0823-085-7500-M	0.823	20.90	0.085	2.16	7.500	190.50	3.211	81.55	2.576	65.44	29.81	132.58	6.95	1.22	**C0823-085-7500-S**	3.629	92.17	23.39	104.05	6.04	1.06
C0823-085-8000-M	0.823	20.90	0.085	2.16	8.000	203.20	3.418	86.82	2.740	69.59	29.81	132.58	6.51	1.14	**C0823-085-8000-S**	3.864	98.16	23.39	104.05	5.66	0.99
C0823-085-8500-M	0.823	20.90	0.085	2.16	8.500	215.90	3.625	92.09	2.903	73.75	29.81	132.58	6.11	1.07	**C0823-085-8500-S**	4.100	104.15	23.39	104.05	5.32	0.93
C0823-085-9000-M	0.823	20.90	0.085	2.16	9.000	228.60	3.833	97.35	3.067	77.90	29.81	132.58	5.77	1.01	**C0823-085-9000-S**	4.336	110.14	23.39	104.05	5.02	0.88
C0823-085-9500-M*	0.823	20.90	0.085	2.16	9.500	241.30	4.090	103.89	3.292	83.62	29.81	132.58	5.51	0.96	**C0823-085-9500-S***	4.617	117.27	23.39	104.05	4.79	0.84
C0823-092-1250-M	0.823	20.90	0.092	2.34	1.250	31.75	0.668	16.96	0.593	15.06	37.10	165.01	63.69	11.15	**C0823-092-1250-S**	0.727	18.46	28.99	128.95	55.39	9.69
C0823-092-1375-M	0.823	20.90	0.092	2.34	1.375	34.93	0.724	18.40	0.640	16.25	37.10	165.01	57.01	9.98	**C0823-092-1375-S**	0.790	20.07	28.99	128.95	49.57	8.68
C0823-092-1500-M	0.823	20.90	0.092	2.34	1.500	38.10	0.781	19.84	0.687	17.45	37.10	165.01	51.59	9.03	**C0823-092-1500-S**	0.854	21.69	28.99	128.95	44.86	7.85
C0823-092-1625-M	0.823	20.90	0.092	2.34	1.625	41.28	0.838	21.28	0.734	18.64	37.10	165.01	47.12	8.25	**C0823-092-1625-S**	0.917	23.30	28.99	128.95	40.97	7.17
C0823-092-1750-M	0.823	20.90	0.092	2.34	1.750	44.45	0.894	22.72	0.781	19.83	37.10	165.01	43.36	7.59	**C0823-092-1750-S**	0.981	24.92	28.99	128.95	37.70	6.60
C0823-092-1875-M	0.823	20.90	0.092	2.34	1.875	47.63	0.951	24.16	0.827	21.02	37.10	165.01	40.15	7.03	**C0823-092-1875-S**	1.045	26.54	28.99	128.95	34.92	6.11
C0823-092-2000-M	0.823	20.90	0.092	2.34	2.000	50.80	1.008	25.60	0.874	22.21	37.10	165.01	37.39	6.54	**C0823-092-2000-S**	1.108	28.15	28.99	128.95	32.51	5.69
C0823-092-2125-M	0.823	20.90	0.092	2.34	2.125	53.98	1.065	27.04	0.921	23.40	37.10	165.01	34.98	6.12	**C0823-092-2125-S**	1.172	29.77	28.99	128.95	30.42	5.32
C0823-092-2250-M	0.823	20.90	0.092	2.34	2.250	57.15	1.121	28.48	0.968	24.59	37.10	165.01	32.86	5.75	**C0823-092-2250-S**	1.236	31.38	28.99	128.95	28.58	5.00
C0823-092-2375-M	0.823	20.90	0.092	2.34	2.375	60.33	1.178	29.92	1.015	25.78	37.10	165.01	30.99	5.42	**C0823-092-2375-S**	1.299	33.00	28.99	128.95	26.95	4.72
C0823-092-2500-M	0.823	20.90	0.092	2.34	2.500	63.50	1.235	31.36	1.062	26.97	37.10	165.01	29.32	5.13	**C0823-092-2500-S**	1.363	34.62	28.99	128.95	25.49	4.46
C0823-092-2625-M	0.823	20.90	0.092	2.34	2.625	66.68	1.291	32.80	1.109	28.16	37.10	165.01	27.82	4.87	**C0823-092-2625-S**	1.426	36.23	28.99	128.95	24.19	4.23
C0823-092-2750-M	0.823	20.90	0.092	2.34	2.750	69.85	1.348	34.24	1.156	29.35	37.10	165.01	26.46	4.63	**C0823-092-2750-S**	1.490	37.85	28.99	128.95	23.01	4.03
C0823-092-2875-M	0.823	20.90	0.092	2.34	2.875	73.03	1.405	35.68	1.203	30.54	37.10	165.01	25.23	4.42	**C0823-092-2875-S**	1.554	39.46	28.99	128.95	21.94	3.84
C0823-092-3000-M	0.823	20.90	0.092	2.34	3.000	76.20	1.461	37.12	1.249	31.74	37.10	165.01	24.11	4.22	**C0823-092-3000-S**	1.617	41.08	28.99	128.95	20.97	3.67
C0823-092-3250-M	0.823	20.90	0.092	2.34	3.250	82.55	1.575	40.00	1.343	34.12	37.10	165.01	22.15	3.88	**C0823-092-3250-S**	1.745	44.31	28.99	128.95	19.26	3.37
C0823-092-3500-M	0.823	20.90	0.092	2.34	3.500	88.90	1.688	42.88	1.437	36.50	37.10	165.01	20.48	3.58	**C0823-092-3500-S**	1.872	47.54	28.99	128.95	17.81	3.12
C0823-092-3750-M	0.823	20.90	0.092	2.34	3.750	95.25	1.802	45.76	1.531	38.88	37.10	165.01	19.04	3.33	**C0823-092-3750-S**	1.999	50.78	28.99	128.95	16.56	2.90
C0823-092-4000-M	0.823	20.90	0.092	2.34	4.000	101.60	1.915	48.64	1.625	41.26	37.10	165.01	17.79	3.11	**C0823-092-4000-S**	2.126	54.01	28.99	128.95	15.47	2.71

Part Numbers with an "*" are squared and not ground. **Part Numbers in bold** represent the newly expanded Associated Spring RAYMOND compression spring offering.

MUSIC WIRE															STAINLESS STEEL						
Catalog #	Outside Diameter (OD)		Wire Diameter (d)		Free Length (L) Approx		Load Length (L_1)		Solid Height (Sh) Approx		Load (P) at L_1		Spring Rate (R)		Catalog #	Load Length (L_1)		Load (P) at L_1		Spring Rate (R)	
	in	mm	in	mm	in	mm	in	mm	in	mm	lb	N	lb/in	N/mm		in	mm	lb	N	lb/in	N/mm
C0823-092-4250-M	0.823	20.90	0.092	2.34	4.250	107.95	2.029	51.52	1.718	43.64	37.10	165.01	16.70	2.92	**C0823-092-4250-S**	2.254	57.24	28.99	128.95	14.52	2.54
C0823-092-4500-M	0.823	20.90	0.092	2.34	4.500	114.30	2.142	54.40	1.812	46.03	37.10	165.01	15.73	2.75	**C0823-092-4500-S**	2.381	60.47	28.99	128.95	13.68	2.39
C0823-092-4750-M	0.823	20.90	0.092	2.34	4.750	120.65	2.255	57.29	1.906	48.41	37.10	165.01	14.87	2.60	**C0823-092-4750-S**	2.508	63.71	28.99	128.95	12.93	2.26
C0823-092-5000-M	0.823	20.90	0.092	2.34	5.000	127.00	2.369	60.17	2.000	50.79	37.10	165.01	14.10	2.47	**C0823-092-5000-S**	2.635	66.94	28.99	128.95	12.26	2.15
C0823-092-5250-M	0.823	20.90	0.092	2.34	5.250	133.35	2.482	63.05	2.093	53.17	37.10	165.01	13.40	2.35	**C0823-092-5250-S**	2.763	70.17	28.99	128.95	11.65	2.04
C0823-092-5500-M	0.823	20.90	0.092	2.34	5.500	139.70	2.596	65.93	2.187	55.55	37.10	165.01	12.77	2.24	**C0823-092-5500-S**	2.890	73.40	28.99	128.95	11.11	1.94
C0823-092-5750-M	0.823	20.90	0.092	2.34	5.750	146.05	2.709	68.81	2.281	57.94	37.10	165.01	12.20	2.13	**C0823-092-5750-S**	3.017	76.63	28.99	128.95	10.61	1.86
C0823-092-6000-M	0.823	20.90	0.092	2.34	6.000	152.40	2.822	71.69	2.375	60.32	37.10	165.01	11.67	2.04	**C0823-092-6000-S**	3.144	79.87	28.99	128.95	10.15	1.78
C0823-092-6250-M	0.823	20.90	0.092	2.34	6.250	158.75	2.936	74.57	2.468	62.70	37.10	165.01	11.19	1.96	**C0823-092-6250-S**	3.272	83.10	28.99	128.95	9.73	1.70
C0823-092-6500-M	0.823	20.90	0.092	2.34	6.500	165.10	3.049	77.45	2.562	65.08	37.10	165.01	10.75	1.88	**C0823-092-6500-S**	3.399	86.33	28.99	128.95	9.35	1.64
C0823-092-6750-M	0.823	20.90	0.092	2.34	6.750	171.45	3.163	80.33	2.656	67.46	37.10	165.01	10.34	1.81	**C0823-092-6750-S**	3.526	89.56	28.99	128.95	8.99	1.57
C0823-092-7000-M	0.823	20.90	0.092	2.34	7.000	177.80	3.276	83.21	2.750	69.84	37.10	165.01	9.96	1.74	**C0823-092-7000-S**	3.653	92.79	28.99	128.95	8.66	1.52
C0823-092-7500-M	0.823	20.90	0.092	2.34	7.500	190.50	3.503	88.97	2.937	74.61	37.10	165.01	9.28	1.62	**C0823-092-7500-S**	3.908	99.26	28.99	128.95	8.07	1.41
C0823-092-8000-M	0.823	20.90	0.092	2.34	8.000	203.20	3.730	94.73	3.125	79.37	37.10	165.01	8.69	1.52	**C0823-092-8000-S**	4.162	105.72	28.99	128.95	7.55	1.32
C0823-092-8500-M	0.823	20.90	0.092	2.34	8.500	215.90	3.956	100.49	3.312	84.14	37.10	165.01	8.17	1.43	**C0823-092-8500-S**	4.417	112.19	28.99	128.95	7.10	1.24
C0823-092-9000-M	0.823	20.90	0.092	2.34	9.000	228.60	4.183	106.26	3.500	88.90	37.10	165.01	7.70	1.35	**C0823-092-9000-S**	4.671	118.65	28.99	128.95	6.70	1.17
C0823-092-9500-M	0.823	20.90	0.092	2.34	9.500	241.30	4.410	112.02	3.687	93.66	37.10	165.01	7.29	1.28	**C0823-092-9500-S**	4.926	125.12	28.99	128.95	6.34	1.11
C0823-098-1250-M	0.823	20.90	0.098	2.49	1.250	31.75	0.709	18.01	0.644	16.37	44.16	196.42	81.64	14.29	**C0823-098-1250-S**	0.766	19.45	34.37	152.90	70.99	12.42
C0823-098-1375-M	0.823	20.90	0.098	2.49	1.375	34.93	0.770	19.56	0.696	17.69	44.16	196.42	72.98	12.77	**C0823-098-1375-S**	0.833	21.17	34.37	152.90	63.46	11.11
C0823-098-1500-M	0.823	20.90	0.098	2.49	1.500	38.10	0.831	21.10	0.748	19.01	44.16	196.42	65.99	11.55	**C0823-098-1500-S**	0.901	22.88	34.37	152.90	57.38	10.04
C0823-098-1625-M	0.823	20.90	0.098	2.49	1.625	41.28	0.892	22.65	0.800	20.33	44.16	196.42	60.22	10.54	**C0823-098-1625-S**	0.969	24.60	34.37	152.90	52.36	9.16
C0823-098-1750-M	0.823	20.90	0.098	2.49	1.750	44.45	0.953	24.19	0.852	21.65	44.16	196.42	55.37	9.69	**C0823-098-1750-S**	1.036	26.32	34.37	152.90	48.15	8.43
C0823-098-1875-M	0.823	20.90	0.098	2.49	1.875	47.63	1.013	25.74	0.904	22.97	44.16	196.42	51.25	8.97	**C0823-098-1875-S**	1.104	28.03	34.37	152.90	44.57	7.80
C0823-098-2000-M	0.823	20.90	0.098	2.49	2.000	50.80	1.074	27.29	0.956	24.29	44.16	196.42	47.70	8.35	**C0823-098-2000-S**	1.171	29.75	34.37	152.90	41.48	7.26
C0823-098-2125-M	0.823	20.90	0.098	2.49	2.125	53.98	1.135	28.83	1.008	25.61	44.16	196.42	44.61	7.81	**C0823-098-2125-S**	1.239	31.47	34.37	152.90	38.79	6.79
C0823-098-2250-M	0.823	20.90	0.098	2.49	2.250	57.15	1.196	30.38	1.060	26.93	44.16	196.42	41.89	7.33	**C0823-098-2250-S**	1.306	33.18	34.37	152.90	36.43	6.37
C0823-098-2375-M	0.823	20.90	0.098	2.49	2.375	60.33	1.257	31.92	1.112	28.26	44.16	196.42	39.49	6.91	**C0823-098-2375-S**	1.374	34.90	34.37	152.90	34.34	6.01
C0823-098-2500-M	0.823	20.90	0.098	2.49	2.500	63.50	1.318	33.47	1.164	29.58	44.16	196.42	37.35	6.54	**C0823-098-2500-S**	1.442	36.62	34.37	152.90	32.48	5.68
C0823-098-2625-M	0.823	20.90	0.098	2.49	2.625	66.68	1.378	35.01	1.216	30.90	44.16	196.42	35.43	6.20	**C0823-098-2625-S**	1.509	38.33	34.37	152.90	30.80	5.39
C0823-098-2750-M	0.823	20.90	0.098	2.49	2.750	69.85	1.439	36.56	1.268	32.22	44.16	196.42	33.69	5.90	**C0823-098-2750-S**	1.577	40.05	34.37	152.90	29.30	5.13
C0823-098-2875-M	0.823	20.90	0.098	2.49	2.875	73.03	1.500	38.11	1.320	33.54	44.16	196.42	32.12	5.62	**C0823-098-2875-S**	1.644	41.77	34.37	152.90	27.93	4.89
C0823-098-3000-M	0.823	20.90	0.098	2.49	3.000	76.20	1.561	39.65	1.372	34.86	44.16	196.42	30.69	5.37	**C0823-098-3000-S**	1.712	43.48	34.37	152.90	26.69	4.67
C0823-098-3250-M	0.823	20.90	0.098	2.49	3.250	82.55	1.683	42.74	1.477	37.50	44.16	196.42	28.18	4.93	**C0823-098-3250-S**	1.847	46.92	34.37	152.90	24.50	4.29
C0823-098-3500-M	0.823	20.90	0.098	2.49	3.500	88.90	1.804	45.83	1.581	40.15	44.16	196.42	26.04	4.56	**C0823-098-3500-S**	1.982	50.35	34.37	152.90	22.65	3.96
C0823-098-3750-M	0.823	20.90	0.098	2.49	3.750	95.25	1.926	48.92	1.685	42.79	44.16	196.42	24.21	4.24	**C0823-098-3750-S**	2.117	53.78	34.37	152.90	21.05	3.68
C0823-098-4000-M	0.823	20.90	0.098	2.49	4.000	101.60	2.048	52.02	1.789	45.43	44.16	196.42	22.62	3.96	**C0823-098-4000-S**	2.253	57.21	34.37	152.90	19.67	3.44
C0823-098-4250-M	0.823	20.90	0.098	2.49	4.250	107.95	2.170	55.11	1.893	48.07	44.16	196.42	21.23	3.71	**C0823-098-4250-S**	2.388	60.65	34.37	152.90	18.46	3.23
C0823-098-4500-M	0.823	20.90	0.098	2.49	4.500	114.30	2.291	58.20	1.997	50.71	44.16	196.42	19.99	3.50	**C0823-098-4500-S**	2.523	64.08	34.37	152.90	17.39	3.04
C0823-098-4750-M	0.823	20.90	0.098	2.49	4.750	120.65	2.413	61.29	2.101	53.36	44.16	196.42	18.90	3.31	**C0823-098-4750-S**	2.658	67.51	34.37	152.90	16.43	2.88
C0823-098-5000-M	0.823	20.90	0.098	2.49	5.000	127.00	2.535	64.38	2.205	56.00	44.16	196.42	17.91	3.13	**C0823-098-5000-S**	2.793	70.95	34.37	152.90	15.58	2.73
C0823-098-5250-M	0.823	20.90	0.098	2.49	5.250	133.35	2.656	67.47	2.309	58.64	44.16	196.42	17.03	2.98	**C0823-098-5250-S**	2.928	74.38	34.37	152.90	14.81	2.59
C0823-098-5500-M	0.823	20.90	0.098	2.49	5.500	139.70	2.778	70.56	2.413	61.28	44.16	196.42	16.22	2.84	**C0823-098-5500-S**	3.063	77.81	34.37	152.90	14.11	2.47
C0823-098-5750-M	0.823	20.90	0.098	2.49	5.750	146.05	2.900	73.66	2.517	63.92	44.16	196.42	15.49	2.71	**C0823-098-5750-S**	3.199	81.24	34.37	152.90	13.47	2.36
C0823-098-6000-M	0.823	20.90	0.098	2.49	6.000	152.40	3.022	76.75	2.621	66.57	44.16	196.42	14.83	2.59	**C0823-098-6000-S**	3.334	84.68	34.37	152.90	12.89	2.26
C0823-098-6250-M	0.823	20.90	0.098	2.49	6.250	158.75	3.143	79.84	2.725	69.21	44.16	196.42	14.21	2.49	**C0823-098-6250-S**	3.469	88.11	34.37	152.90	12.36	2.16
C0823-098-6500-M	0.823	20.90	0.098	2.49	6.500	165.10	3.265	82.93	2.829	71.85	44.16	196.42	13.65	2.39	**C0823-098-6500-S**	3.604	91.54	34.37	152.90	11.87	2.08
C0823-098-6750-M	0.823	20.90	0.098	2.49	6.750	171.45	3.387	86.02	2.933	74.49	44.16	196.42	13.13	2.30	**C0823-098-6750-S**	3.739	94.98	34.37	152.90	11.42	2.00
C0823-098-7000-M	0.823	20.90	0.098	2.49	7.000	177.80	3.508	89.11	3.037	77.13	44.16	196.42	12.65	2.21	**C0823-098-7000-S**	3.874	98.41	34.37	152.90	11.00	1.92
C0823-098-7500-M	0.823	20.90	0.098	2.49	7.500	190.50	3.752	95.30	3.245	82.42	44.16	196.42	11.78	2.06	**C0823-098-7500-S**	4.145	105.27	34.37	152.90	10.24	1.79
C0823-098-8000-M	0.823	20.90	0.098	2.49	8.000	203.20	3.995	101.48	3.453	87.70	44.16	196.42	11.03	1.93	**C0823-098-8000-S**	4.415	112.14	34.37	152.90	9.59	1.68
C0823-098-8500-M	0.823	20.90	0.098	2.49	8.500	215.90	4.239	107.66	3.661	92.99	44.16	196.42	10.36	1.81	**C0823-098-8500-S**	4.685	119.01	34.37	152.90	9.01	1.58
C0823-098-9000-M	0.823	20.90	0.098	2.49	9.000	228.60	4.482	113.84	3.869	98.27	44.16	196.42	9.77	1.71	**C0823-098-9000-S**	4.956	125.87	34.37	152.90	8.50	1.49
C0823-098-9500-M	0.823	20.90	0.098	2.49	9.500	241.30	4.725	120.03	4.077	103.56	44.16	196.42	9.25	1.62	**C0823-098-9500-S**	5.226	132.74	34.37	152.90	8.04	1.41
C0823-105-1250-M	0.823	20.90	0.105	2.67	1.250	31.75	0.756	19.20	0.702	17.84	53.38	237.46	108.05	18.91	**C0823-105-1250-S**	0.810	20.57	41.36	183.97	93.96	16.44
C0823-105-1375-M	0.823	20.90	0.105	2.67	1.375	34.93	0.822	20.87	0.760	19.31	53.38	237.46	96.46	16.88	**C0823-105-1375-S**	0.882	22.40	41.36	183.97	83.87	14.68
C0823-105-1500-M	0.823	20.90	0.105	2.67	1.500	38.10	0.887	22.53	0.818	20.78	53.38	237.46	87.11	15.24	**C0823-105-1500-S**	0.954	24.23	41.36	183.97	75.75	13.26
C0823-105-1625-M	0.823	20.90	0.105	2.67	1.625	41.28	0.953	24.20	0.876	22.25	53.38	237.46	79.41	13.90	**C0823-105-1625-S**	1.026	26.06	41.36	183.97	69.06	12.08
C0823-105-1750-M	0.823	20.90	0.105	2.67	1.750	44.45	1.018	25.87	0.934	23.72	53.38	237.46	72.97	12.77	**C0823-105-1750-S**	1.098	27.89	41.36	183.97	63.45	11.10
C0823-105-1875-M	0.823	20.90	0.105	2.67	1.875	47.63	1.084	27.53	0.992	25.19	53.38	237.46	67.49	11.81	**C0823-105-1875-S**	1.170	29.73	41.36	183.97	58.69	10.27
C0823-105-2000-M	0.823	20.90	0.105	2.67	2.000	50.80	1.150	29.20	1.050	26.66	53.38	237.46	62.78	10.99	**C0823-105-2000-S**	1.242	31.56	41.36	183.97	54.59	9.55
C0823-105-2125-M	0.823	20.90	0.105	2.67	2.125	53.98	1.215	30.87	1.107	28.13	53.38	237.46	58.68	10.27	**C0823-105-2125-S**	1.314	33.39	41.36	183.97	51.03	8.93
C0823-105-2250-M	0.823	20.90	0.105	2.67	2.250	57.15	1.281	32.53	1.165	29.60	53.38	237.46	55.08	9.64	**C0823-105-2250-S**	1.387	35.22	41.36	183.97	47.90	8.38
C0823-105-2375-M	0.823	20.90	0.105	2.67	2.375	60.33	1.346	34.20	1.223	31.07	53.38	237.46	51.90	9.08	**C0823-105-2375-S**	1.459	37.05	41.36	183.97	45.13	7.90
C0823-105-2500-M	0.823	20.90	0.105	2.67	2.500	63.50	1.412	35.87	1.281	32.54	53.38	237.46	49.07	8.59	**C0823-105-2500-S**	1.531	38.88	41.36	183.97	42.67	7.47

FOR INFORMATION ON ALTERNATIVE FINISHES, SEE PAGE 311

Part Numbers with an "*" are squared and not ground. **Part Numbers in bold** represent the newly expanded Associated Spring RAYMOND compression spring offering.

MUSIC WIRE															STAINLESS STEEL						
Catalog #	Outside Diameter (OD)		Wire Diameter (d)		Free Length (L) Approx		Load Length (L_1)		Solid Height (Sh) Approx		Load (P) at L_1		Spring Rate (R)		Catalog #	Load Length (L_1)		Load (P) at L_1		Spring Rate (R)	
	in	mm	in	mm	in	mm	in	mm	in	mm	lb	N	lb/in	N/mm		in	mm	lb	N	lb/in	N/mm
C0823-105-2625-M	**0.823**	**20.90**	**0.105**	**2.67**	**2.625**	**66.68**	**1.478**	**37.53**	**1.339**	**34.01**	**53.38**	**237.46**	**46.53**	**8.14**	**C0823-105-2625-S**	**1.603**	**40.71**	**41.36**	**183.97**	**40.46**	**7.08**
C0823-105-2750-M	**0.823**	**20.90**	**0.105**	**2.67**	**2.750**	**69.85**	**1.543**	**39.20**	**1.397**	**35.48**	**53.38**	**237.46**	**44.24**	**7.74**	**C0823-105-2750-S**	**1.675**	**42.54**	**41.36**	**183.97**	**38.47**	**6.73**
C0823-105-2875-M	**0.823**	**20.90**	**0.105**	**2.67**	**2.875**	**73.03**	**1.609**	**40.87**	**1.455**	**36.95**	**53.38**	**237.46**	**42.17**	**7.38**	**C0823-105-2875-S**	**1.747**	**44.37**	**41.36**	**183.97**	**36.67**	**6.42**
C0823-105-3000-M	**0.823**	**20.90**	**0.105**	**2.67**	**3.000**	**76.20**	**1.675**	**42.53**	**1.513**	**38.42**	**53.38**	**237.46**	**40.28**	**7.05**	**C0823-105-3000-S**	**1.819**	**46.21**	**41.36**	**183.97**	**35.02**	**6.13**
C0823-105-3250-M	**0.823**	**20.90**	**0.105**	**2.67**	**3.250**	**82.55**	**1.806**	**45.87**	**1.628**	**41.36**	**53.38**	**237.46**	**36.96**	**6.47**	**C0823-105-3250-S**	**1.963**	**49.87**	**41.36**	**183.97**	**32.14**	**5.62**
C0823-105-3500-M	**0.823**	**20.90**	**0.105**	**2.67**	**3.500**	**88.90**	**1.937**	**49.20**	**1.744**	**44.30**	**53.38**	**237.46**	**34.16**	**5.98**	**C0823-105-3500-S**	**2.108**	**53.53**	**41.36**	**183.97**	**29.70**	**5.20**
C0823-105-3750-M	**0.823**	**20.90**	**0.105**	**2.67**	**3.750**	**95.25**	**2.068**	**52.53**	**1.860**	**47.25**	**53.38**	**237.46**	**31.74**	**5.56**	**C0823-105-3750-S**	**2.252**	**57.19**	**41.36**	**183.97**	**27.60**	**4.83**
C0823-105-4000-M	**0.823**	**20.90**	**0.105**	**2.67**	**4.000**	**101.60**	**2.199**	**55.87**	**1.976**	**50.19**	**53.38**	**237.46**	**29.65**	**5.19**	**C0823-105-4000-S**	**2.396**	**60.86**	**41.36**	**183.97**	**25.78**	**4.51**
C0823-105-4250-M	**0.823**	**20.90**	**0.105**	**2.67**	**4.250**	**107.95**	**2.331**	**59.20**	**2.092**	**53.13**	**53.38**	**237.46**	**27.81**	**4.87**	**C0823-105-4250-S**	**2.540**	**64.52**	**41.36**	**183.97**	**24.19**	**4.23**
C0823-105-4500-M	**0.823**	**20.90**	**0.105**	**2.67**	**4.500**	**114.30**	**2.462**	**62.53**	**2.207**	**56.07**	**53.38**	**237.46**	**26.19**	**4.58**	**C0823-105-4500-S**	**2.684**	**68.18**	**41.36**	**183.97**	**22.78**	**3.99**
C0823-105-4750-M	**0.823**	**20.90**	**0.105**	**2.67**	**4.750**	**120.65**	**2.593**	**65.87**	**2.323**	**59.01**	**53.38**	**237.46**	**24.75**	**4.33**	**C0823-105-4750-S**	**2.828**	**71.84**	**41.36**	**183.97**	**21.52**	**3.77**
C0823-105-5000-M	**0.823**	**20.90**	**0.105**	**2.67**	**5.000**	**127.00**	**2.724**	**69.20**	**2.439**	**61.95**	**53.38**	**237.46**	**23.46**	**4.11**	**C0823-105-5000-S**	**2.973**	**75.50**	**41.36**	**183.97**	**20.40**	**3.57**
C0823-105-5250-M	**0.823**	**20.90**	**0.105**	**2.67**	**5.250**	**133.35**	**2.856**	**72.53**	**2.555**	**64.89**	**53.38**	**237.46**	**22.30**	**3.90**	**C0823-105-5250-S**	**3.117**	**79.17**	**41.36**	**183.97**	**19.39**	**3.39**
C0823-105-5500-M	**0.823**	**20.90**	**0.105**	**2.67**	**5.500**	**139.70**	**2.987**	**75.87**	**2.671**	**67.83**	**53.38**	**237.46**	**21.24**	**3.72**	**C0823-105-5500-S**	**3.261**	**82.83**	**41.36**	**183.97**	**18.47**	**3.23**
C0823-105-5750-M	**0.823**	**20.90**	**0.105**	**2.67**	**5.750**	**146.05**	**3.118**	**79.20**	**2.786**	**70.77**	**53.38**	**237.46**	**20.28**	**3.55**	**C0823-105-5750-S**	**3.405**	**86.49**	**41.36**	**183.97**	**17.64**	**3.09**
C0823-105-6000-M	**0.823**	**20.90**	**0.105**	**2.67**	**6.000**	**152.40**	**3.249**	**82.53**	**2.902**	**73.71**	**53.38**	**237.46**	**19.41**	**3.40**	**C0823-105-6000-S**	**3.549**	**90.15**	**41.36**	**183.97**	**16.88**	**2.95**
C0823-105-6250-M	**0.823**	**20.90**	**0.105**	**2.67**	**6.250**	**158.75**	**3.381**	**85.87**	**3.018**	**76.66**	**53.38**	**237.46**	**18.60**	**3.26**	**C0823-105-6250-S**	**3.694**	**93.82**	**41.36**	**183.97**	**16.18**	**2.83**
C0823-105-6500-M	**0.823**	**20.90**	**0.105**	**2.67**	**6.500**	**165.10**	**3.512**	**89.20**	**3.134**	**79.60**	**53.38**	**237.46**	**17.87**	**3.13**	**C0823-105-6500-S**	**3.838**	**97.48**	**41.36**	**183.97**	**15.54**	**2.72**
C0823-105-6750-M	**0.823**	**20.90**	**0.105**	**2.67**	**6.750**	**171.45**	**3.643**	**92.53**	**3.249**	**82.54**	**53.38**	**237.46**	**17.18**	**3.01**	**C0823-105-6750-S**	**3.982**	**101.14**	**41.36**	**183.97**	**14.94**	**2.61**
C0823-105-7000-M	**0.823**	**20.90**	**0.105**	**2.67**	**7.000**	**177.80**	**3.774**	**95.87**	**3.365**	**85.48**	**53.38**	**237.46**	**16.55**	**2.90**	**C0823-105-7000-S**	**4.126**	**104.80**	**41.36**	**183.97**	**14.39**	**2.52**
C0823-105-7500-M	**0.823**	**20.90**	**0.105**	**2.67**	**7.500**	**190.50**	**4.037**	**102.53**	**3.597**	**91.36**	**53.38**	**237.46**	**15.41**	**2.70**	**C0823-105-7500-S**	**4.414**	**112.13**	**41.36**	**183.97**	**13.40**	**2.35**
C0823-105-8000-M	**0.823**	**20.90**	**0.105**	**2.67**	**8.000**	**203.20**	**4.299**	**109.20**	**3.828**	**97.24**	**53.38**	**237.46**	**14.43**	**2.52**	**C0823-105-8000-S**	**4.703**	**119.45**	**41.36**	**183.97**	**12.54**	**2.20**
C0823-105-8500-M	**0.823**	**20.90**	**0.105**	**2.67**	**8.500**	**215.90**	**4.562**	**115.87**	**4.060**	**103.12**	**53.38**	**237.46**	**13.56**	**2.37**	**C0823-105-8500-S**	**4.991**	**126.78**	**41.36**	**183.97**	**11.79**	**2.06**
C0823-105-9000-M	**0.823**	**20.90**	**0.105**	**2.67**	**9.000**	**228.60**	**4.824**	**122.53**	**4.292**	**109.01**	**53.38**	**237.46**	**12.78**	**2.24**	**C0823-105-9000-S**	**5.280**	**134.10**	**41.36**	**183.97**	**11.12**	**1.95**
C0823-105-9500-M	**0.823**	**20.90**	**0.105**	**2.67**	**9.500**	**241.30**	**5.087**	**129.20**	**4.523**	**114.89**	**53.38**	**237.46**	**12.10**	**2.12**	**C0823-105-9500-S**	**5.568**	**141.43**	**41.36**	**183.97**	**10.52**	**1.84**
C0823-112-1250-M	**0.823**	**20.90**	**0.112**	**2.85**	**1.250**	**31.75**	**0.801**	**20.33**	**0.757**	**19.23**	**63.72**	**283.42**	**141.76**	**24.81**	**C0823-112-1250-S**	**0.852**	**21.63**	**49.12**	**218.49**	**123.27**	**21.57**
C0823-112-1375-M	**0.823**	**20.90**	**0.112**	**2.85**	**1.375**	**34.93**	**0.871**	**22.12**	**0.821**	**20.85**	**63.72**	**283.42**	**126.36**	**22.11**	**C0823-112-1375-S**	**0.928**	**23.57**	**49.12**	**218.49**	**109.88**	**19.23**
C0823-112-1500-M	**0.823**	**20.90**	**0.112**	**2.85**	**1.500**	**38.10**	**0.941**	**23.90**	**0.884**	**22.47**	**63.72**	**283.42**	**113.98**	**19.95**	**C0823-112-1500-S**	**1.004**	**25.51**	**49.12**	**218.49**	**99.12**	**17.35**
C0823-112-1625-M	**0.823**	**20.90**	**0.112**	**2.85**	**1.625**	**41.28**	**1.011**	**25.69**	**0.948**	**24.08**	**63.72**	**283.42**	**103.81**	**18.17**	**C0823-112-1625-S**	**1.081**	**27.45**	**49.12**	**218.49**	**90.27**	**15.80**
C0823-112-1750-M	**0.823**	**20.90**	**0.112**	**2.85**	**1.750**	**44.45**	**1.081**	**27.47**	**1.012**	**25.70**	**63.72**	**283.42**	**95.31**	**16.68**	**C0823-112-1750-S**	**1.157**	**29.40**	**49.12**	**218.49**	**82.88**	**14.50**
C0823-112-1875-M	**0.823**	**20.90**	**0.112**	**2.85**	**1.875**	**47.63**	**1.152**	**29.25**	**1.075**	**27.31**	**63.72**	**283.42**	**88.09**	**15.42**	**C0823-112-1875-S**	**1.234**	**31.34**	**49.12**	**218.49**	**76.60**	**13.41**
C0823-112-2000-M	**0.823**	**20.90**	**0.112**	**2.85**	**2.000**	**50.80**	**1.222**	**31.04**	**1.139**	**28.93**	**63.72**	**283.42**	**81.89**	**14.33**	**C0823-112-2000-S**	**1.310**	**33.28**	**49.12**	**218.49**	**71.21**	**12.46**
C0823-112-2125-M	**0.823**	**20.90**	**0.112**	**2.85**	**2.125**	**53.98**	**1.292**	**32.82**	**1.203**	**30.54**	**63.72**	**283.42**	**76.51**	**13.39**	**C0823-112-2125-S**	**1.387**	**35.22**	**49.12**	**218.49**	**66.53**	**11.64**
C0823-112-2250-M	**0.823**	**20.90**	**0.112**	**2.85**	**2.250**	**57.15**	**1.362**	**34.61**	**1.266**	**32.16**	**63.72**	**283.42**	**71.79**	**12.56**	**C0823-112-2250-S**	**1.463**	**37.16**	**49.12**	**218.49**	**62.42**	**10.92**
C0823-112-2375-M	**0.823**	**20.90**	**0.112**	**2.85**	**2.375**	**60.33**	**1.433**	**36.39**	**1.330**	**33.78**	**63.72**	**283.42**	**67.62**	**11.83**	**C0823-112-2375-S**	**1.540**	**39.11**	**49.12**	**218.49**	**58.80**	**10.29**
C0823-112-2500-M	**0.823**	**20.90**	**0.112**	**2.85**	**2.500**	**63.50**	**1.503**	**38.17**	**1.393**	**35.39**	**63.72**	**283.42**	**63.90**	**11.18**	**C0823-112-2500-S**	**1.616**	**41.05**	**49.12**	**218.49**	**55.57**	**9.72**
C0823-112-2625-M	**0.823**	**20.90**	**0.112**	**2.85**	**2.625**	**66.68**	**1.573**	**39.96**	**1.457**	**37.01**	**63.72**	**283.42**	**60.58**	**10.60**	**C0823-112-2625-S**	**1.693**	**42.99**	**49.12**	**218.49**	**52.68**	**9.22**
C0823-112-2750-M	**0.823**	**20.90**	**0.112**	**2.85**	**2.750**	**69.85**	**1.643**	**41.74**	**1.521**	**38.62**	**63.72**	**283.42**	**57.58**	**10.08**	**C0823-112-2750-S**	**1.769**	**44.93**	**49.12**	**218.49**	**50.07**	**8.76**
C0823-112-2875-M	**0.823**	**20.90**	**0.112**	**2.85**	**2.875**	**73.03**	**1.714**	**43.53**	**1.584**	**40.24**	**63.72**	**283.42**	**54.86**	**9.60**	**C0823-112-2875-S**	**1.845**	**46.87**	**49.12**	**218.49**	**47.71**	**8.35**
C0823-112-3000-M	**0.823**	**20.90**	**0.112**	**2.85**	**3.000**	**76.20**	**1.784**	**45.31**	**1.648**	**41.85**	**63.72**	**283.42**	**52.39**	**9.17**	**C0823-112-3000-S**	**1.922**	**48.82**	**49.12**	**218.49**	**45.56**	**7.97**
C0823-112-3250-M	**0.823**	**20.90**	**0.112**	**2.85**	**3.250**	**82.55**	**1.924**	**48.88**	**1.775**	**45.08**	**63.72**	**283.42**	**48.06**	**8.41**	**C0823-112-3250-S**	**2.075**	**52.70**	**49.12**	**218.49**	**41.80**	**7.31**
C0823-112-3500-M	**0.823**	**20.90**	**0.112**	**2.85**	**3.500**	**88.90**	**2.065**	**52.45**	**1.902**	**48.32**	**63.72**	**283.42**	**44.40**	**7.77**	**C0823-112-3500-S**	**2.228**	**56.58**	**49.12**	**218.49**	**38.61**	**6.76**
C0823-112-3750-M	**0.823**	**20.90**	**0.112**	**2.85**	**3.750**	**95.25**	**2.205**	**56.02**	**2.029**	**51.55**	**63.72**	**283.42**	**41.25**	**7.22**	**C0823-112-3750-S**	**2.381**	**60.47**	**49.12**	**218.49**	**35.87**	**6.28**
C0823-112-4000-M	**0.823**	**20.90**	**0.112**	**2.85**	**4.000**	**101.60**	**2.346**	**59.58**	**2.157**	**54.78**	**63.72**	**283.42**	**38.52**	**6.74**	**C0823-112-4000-S**	**2.533**	**64.35**	**49.12**	**218.49**	**33.49**	**5.86**
C0823-112-4250-M	**0.823**	**20.90**	**0.112**	**2.85**	**4.250**	**107.95**	**2.486**	**63.15**	**2.284**	**58.01**	**63.72**	**283.42**	**36.13**	**6.32**	**C0823-112-4250-S**	**2.686**	**68.23**	**49.12**	**218.49**	**31.41**	**5.50**
C0823-112-4500-M	**0.823**	**20.90**	**0.112**	**2.85**	**4.500**	**114.30**	**2.627**	**66.72**	**2.411**	**61.24**	**63.72**	**283.42**	**34.01**	**5.95**	**C0823-112-4500-S**	**2.839**	**72.12**	**49.12**	**218.49**	**29.58**	**5.18**
C0823-112-4750-M	**0.823**	**20.90**	**0.112**	**2.85**	**4.750**	**120.65**	**2.767**	**70.29**	**2.538**	**64.47**	**63.72**	**283.42**	**32.14**	**5.62**	**C0823-112-4750-S**	**2.992**	**76.00**	**49.12**	**218.49**	**27.94**	**4.89**
C0823-112-5000-M	**0.823**	**20.90**	**0.112**	**2.85**	**5.000**	**127.00**	**2.908**	**73.86**	**2.665**	**67.70**	**63.72**	**283.42**	**30.45**	**5.33**	**C0823-112-5000-S**	**3.145**	**79.89**	**49.12**	**218.49**	**26.48**	**4.63**
C0823-112-5250-M	**0.823**	**20.90**	**0.112**	**2.85**	**5.250**	**133.35**	**3.048**	**77.42**	**2.793**	**70.93**	**63.72**	**283.42**	**28.94**	**5.06**	**C0823-112-5250-S**	**3.298**	**83.77**	**49.12**	**218.49**	**25.16**	**4.40**
C0823-112-5500-M	**0.823**	**20.90**	**0.112**	**2.85**	**5.500**	**139.70**	**3.189**	**80.99**	**2.920**	**74.16**	**63.72**	**283.42**	**27.57**	**4.82**	**C0823-112-5500-S**	**3.451**	**87.65**	**49.12**	**218.49**	**23.97**	**4.19**
C0823-112-5750-M	**0.823**	**20.90**	**0.112**	**2.85**	**5.750**	**146.05**	**3.329**	**84.56**	**3.047**	**77.40**	**63.72**	**283.42**	**26.32**	**4.61**	**C0823-112-5750-S**	**3.604**	**91.54**	**49.12**	**218.49**	**22.89**	**4.01**
C0823-112-6000-M	**0.823**	**20.90**	**0.112**	**2.85**	**6.000**	**152.40**	**3.470**	**88.13**	**3.174**	**80.63**	**63.72**	**283.42**	**25.18**	**4.41**	**C0823-112-6000-S**	**3.757**	**95.42**	**49.12**	**218.49**	**21.90**	**3.83**
C0823-112-6250-M	**0.823**	**20.90**	**0.112**	**2.85**	**6.250**	**158.75**	**3.610**	**91.70**	**3.302**	**83.86**	**63.72**	**283.42**	**24.14**	**4.22**	**C0823-112-6250-S**	**3.910**	**99.31**	**49.12**	**218.49**	**20.99**	**3.67**
C0823-112-6500-M	**0.823**	**20.90**	**0.112**	**2.85**	**6.500**	**165.10**	**3.751**	**95.27**	**3.429**	**87.09**	**63.72**	**283.42**	**23.17**	**4.06**	**C0823-112-6500-S**	**4.063**	**103.19**	**49.12**	**218.49**	**20.15**	**3.53**
C0823-112-6750-M	**0.823**	**20.90**	**0.112**	**2.85**	**6.750**	**171.45**	**3.891**	**98.83**	**3.556**	**90.32**	**63.72**	**283.42**	**22.29**	**3.90**	**C0823-112-6750-S**	**4.215**	**107.07**	**49.12**	**218.49**	**19.38**	**3.39**
C0823-112-7000-M	**0.823**	**20.90**	**0.112**	**2.85**	**7.000**	**177.80**	**4.032**	**102.40**	**3.683**	**93.55**	**63.72**	**283.42**	**21.46**	**3.76**	**C0823-112-7000-S**	**4.368**	**110.96**	**49.12**	**218.49**	**18.67**	**3.27**
C0823-112-7500-M	**0.823**	**20.90**	**0.112**	**2.85**	**7.500**	**190.50**	**4.313**	**109.54**	**3.938**	**100.01**	**63.72**	**283.42**	**19.99**	**3.50**	**C0823-112-7500-S**	**4.674**	**118.72**	**49.12**	**218.49**	**17.38**	**3.04**
C0823-112-8000-M	**0.823**	**20.90**	**0.112**	**2.85**	**8.000**	**203.20**	**4.594**	**116.68**	**4.192**	**106.48**	**63.72**	**283.42**	**18.70**	**3.27**	**C0823-112-8000-S**	**4.980**	**126.49**	**49.12**	**218.49**	**16.26**	**2.85**
C0823-112-8500-M	**0.823**	**20.90**	**0.112**	**2.85**	**8.500**	**215.90**	**4.874**	**123.81**	**4.446**	**112.94**	**63.72**	**283.42**	**17.57**	**3.08**	**C0823-112-8500-S**	**5.286**	**134.26**	**49.12**	**218.49**	**15.28**	**2.67**
C0823-112-9000-M	**0.823**	**20.90**	**0.112**	**2.85**	**9.000**	**228.60**	**5.155**	**130.95**	**4.701**	**119.40**	**63.72**	**283.42**	**16.57**	**2.90**	**C0823-112-9000-S**	**5.592**	**142.03**	**49.12**	**218.49**	**14.41**	**2.52**
C0823-112-9500-M	**0.823**	**20.90**	**0.112**	**2.85**	**9.500**	**241.30**	**5.436**	**138.08**	**4.955**	**125.86**	**63.72**	**283.42**	**15.68**	**2.74**	**C0823-112-9500-S**	**5.897**	**149.79**	**49.12**	**218.49**	**13.63**	**2.39**
C0823-125-1250-M	**0.823**	**20.90**	**0.125**	**3.18**	**1.250**	**31.75**	**0.876**	**22.26**	**0.851**	**21.62**	**85.97**	**382.41**	**230.14**	**40.27**	**C0823-125-1250-S**	**0.922**	**23.42**	**65.65**	**292.02**	**200.12**	**35.02**
C0823-125-1375-M	**0.823**	**20.90**	**0.125**	**3.18**	**1.375**	**34.93**	**0.955**	**24.25**	**0.925**	**23.49**	**85.97**	**382.41**	**204.57**	**35.80**	**C0823-125-1375-S**	**1.006**	**25.55**	**65.65**	**292.02**	**177.89**	**31.13**
C0823-125-1500-M	**0.823**	**20.90**	**0.125**	**3.18**	**1.500**	**38.10**	**1.033**	**26.24**	**0.998**	**25.35**	**85.97**	**382.41**	**184.11**	**32.22**	**C0823-125-1500-S**	**1.090**	**27.68**	**65.65**	**292.02**	**160.10**	**28.02**

Part Numbers with an "*" are squared and not ground. **Part Numbers in bold** represent the newly expanded Associated Spring RAYMOND compression spring offering.

MUSIC WIRE															STAINLESS STEEL						
Catalog #	Outside Diameter (OD)		Wire Diameter (d)		Free Length (L) Approx		Load Length (L_1)		Solid Height (Sh) Approx		Load (P) at L_1		Spring Rate (R)		Catalog #	Load Length (L_1)		Load (P) at L_1		Spring Rate (R)	
	in	mm	in	mm	in	mm	in	mm	in	mm	lb	N	lb/in	N/mm		in	mm	lb	N	lb/in	N/mm
C0823-125-1625-M	0.823	20.90	0.125	3.18	1.625	41.28	1.111	28.23	1.072	27.22	85.97	382.41	167.38	29.29	**C0823-125-1625-S**	1.174	29.82	65.65	292.02	145.54	25.47
C0823-125-1750-M	0.823	20.90	0.125	3.18	1.750	44.45	1.190	30.22	1.145	29.09	85.97	382.41	153.43	26.85	**C0823-125-1750-S**	1.258	31.95	65.65	292.02	133.41	23.35
C0823-125-1875-M	0.823	20.90	0.125	3.18	1.875	47.63	1.268	32.21	1.219	30.96	85.97	382.41	141.63	24.78	**C0823-125-1875-S**	1.342	34.08	65.65	292.02	123.15	21.55
C0823-125-2000-M	0.823	20.90	0.125	3.18	2.000	50.80	1.346	34.20	1.292	32.83	85.97	382.41	131.51	23.01	**C0823-125-2000-S**	1.426	36.22	65.65	292.02	114.36	20.01
C0823-125-2125-M	0.823	20.90	0.125	3.18	2.125	53.98	1.425	36.18	1.366	34.70	85.97	382.41	122.74	21.48	**C0823-125-2125-S**	1.510	38.35	65.65	292.02	106.73	18.68
C0823-125-2250-M	0.823	20.90	0.125	3.18	2.250	57.15	1.503	38.17	1.440	36.57	85.97	382.41	115.07	20.14	**C0823-125-2250-S**	1.594	40.49	65.65	292.02	100.06	17.51
C0823-125-2375-M	0.823	20.90	0.125	3.18	2.375	60.33	1.581	40.16	1.513	38.43	85.97	382.41	108.30	18.95	**C0823-125-2375-S**	1.678	42.62	65.65	292.02	94.18	16.48
C0823-125-2500-M	0.823	20.90	0.125	3.18	2.500	63.50	1.660	42.15	1.587	40.30	85.97	382.41	102.28	17.90	**C0823-125-2500-S**	1.762	44.75	65.65	292.02	88.94	15.57
C0823-125-2625-M	0.823	20.90	0.125	3.18	2.625	66.68	1.738	44.14	1.660	42.17	85.97	382.41	96.90	16.96	**C0823-125-2625-S**	1.846	46.89	65.65	292.02	84.26	14.75
C0823-125-2750-M	0.823	20.90	0.125	3.18	2.750	69.85	1.816	46.13	1.734	44.04	85.97	382.41	92.06	16.11	**C0823-125-2750-S**	1.930	49.02	65.65	292.02	80.05	14.01
C0823-125-2875-M	0.823	20.90	0.125	3.18	2.875	73.03	1.894	48.12	1.807	45.91	85.97	382.41	87.67	15.34	**C0823-125-2875-S**	2.014	51.15	65.65	292.02	76.24	13.34
C0823-125-3000-M	0.823	20.90	0.125	3.18	3.000	76.20	1.973	50.11	1.881	47.78	85.97	382.41	83.69	14.65	**C0823-125-3000-S**	2.098	53.29	65.65	292.02	72.77	12.74
C0823-125-3250-M	0.823	20.90	0.125	3.18	3.250	82.55	2.129	54.09	2.028	51.52	85.97	382.41	76.71	13.42	**C0823-125-3250-S**	2.266	57.55	65.65	292.02	66.71	11.67
C0823-125-3500-M	0.823	20.90	0.125	3.18	3.500	88.90	2.286	58.06	2.175	55.25	85.97	382.41	70.81	12.39	**C0823-125-3500-S**	2.434	61.82	65.65	292.02	61.58	10.78
C0823-125-3750-M	0.823	20.90	0.125	3.18	3.750	95.25	2.443	62.04	2.322	58.99	85.97	382.41	65.75	11.51	**C0823-125-3750-S**	2.602	66.09	65.65	292.02	57.18	10.01
C0823-125-4000-M	0.823	20.90	0.125	3.18	4.000	101.60	2.599	66.02	2.470	62.73	85.97	382.41	61.37	10.74	**C0823-125-4000-S**	2.770	70.35	65.65	292.02	53.37	9.34
C0823-125-4250-M	0.823	20.90	0.125	3.18	4.250	107.95	2.756	70.00	2.617	66.46	85.97	382.41	57.54	10.07	**C0823-125-4250-S**	2.938	74.62	65.65	292.02	50.03	8.76
C0823-125-4500-M	0.823	20.90	0.125	3.18	4.500	114.30	2.912	73.98	2.764	70.20	85.97	382.41	54.15	9.48	**C0823-125-4500-S**	3.106	78.89	65.65	292.02	47.09	8.24
C0823-125-4750-M	0.823	20.90	0.125	3.18	4.750	120.65	3.069	77.95	2.911	73.94	85.97	382.41	51.14	8.95	**C0823-125-4750-S**	3.274	83.15	65.65	292.02	44.47	7.78
C0823-125-5000-M	0.823	20.90	0.125	3.18	5.000	127.00	3.226	81.93	3.058	77.68	85.97	382.41	48.45	8.48	**C0823-125-5000-S**	3.442	87.42	65.65	292.02	42.13	7.37
C0823-125-5250-M	0.823	20.90	0.125	3.18	5.250	133.35	3.382	85.91	3.205	81.41	85.97	382.41	46.03	8.05	**C0823-125-5250-S**	3.610	91.69	65.65	292.02	40.02	7.00
C0823-125-5500-M	0.823	20.90	0.125	3.18	5.500	139.70	3.539	89.89	3.352	85.15	85.97	382.41	43.84	7.67	**C0823-125-5500-S**	3.778	95.96	65.65	292.02	38.12	6.67
C0823-125-5750-M	0.823	20.90	0.125	3.18	5.750	146.05	3.695	93.87	3.500	88.89	85.97	382.41	41.84	7.32	**C0823-125-5750-S**	3.946	100.22	65.65	292.02	36.39	6.37
C0823-125-6000-M	0.823	20.90	0.125	3.18	6.000	152.40	3.852	97.84	3.647	92.63	85.97	382.41	40.02	7.00	**C0823-125-6000-S**	4.114	104.49	65.65	292.02	34.80	6.09
C0823-125-6250-M	0.823	20.90	0.125	3.18	6.250	158.75	4.009	101.82	3.794	96.36	85.97	382.41	38.36	6.71	**C0823-125-6250-S**	4.282	108.76	65.65	292.02	33.35	5.84
C0823-125-6500-M	0.823	20.90	0.125	3.18	6.500	165.10	4.165	105.80	3.941	100.10	85.97	382.41	36.82	6.44	**C0823-125-6500-S**	4.450	113.02	65.65	292.02	32.02	5.60
C0823-125-6750-M	0.823	20.90	0.125	3.18	6.750	171.45	4.322	109.78	4.088	103.84	85.97	382.41	35.41	6.20	**C0823-125-6750-S**	4.618	117.29	65.65	292.02	30.79	5.39
C0823-125-7000-M	0.823	20.90	0.125	3.18	7.000	177.80	4.479	113.76	4.235	107.58	85.97	382.41	34.10	5.97	**C0823-125-7000-S**	4.786	121.56	65.65	292.02	29.65	5.19
C0823-125-7500-M	0.823	20.90	0.125	3.18	7.500	190.50	4.792	121.71	4.530	115.05	85.97	382.41	31.74	5.56	**C0823-125-7500-S**	5.122	130.09	65.65	292.02	27.60	4.83
C0823-125-8000-M	0.823	20.90	0.125	3.18	8.000	203.20	5.105	129.67	4.824	122.53	85.97	382.41	29.70	5.20	**C0823-125-8000-S**	5.458	138.62	65.65	292.02	25.82	4.52
C0823-125-8500-M	0.823	20.90	0.125	3.18	8.500	215.90	5.418	137.62	5.118	130.00	85.97	382.41	27.90	4.88	**C0823-125-8500-S**	5.794	147.16	65.65	292.02	24.26	4.24
C0823-125-9000-M	0.823	20.90	0.125	3.18	9.000	228.60	5.731	145.58	5.412	137.47	85.97	382.41	26.30	4.60	**C0823-125-9000-S**	6.130	155.69	65.65	292.02	22.87	4.00
C0823-125-9500-M	0.823	20.90	0.125	3.18	9.500	241.30	6.045	153.53	5.707	144.95	85.97	382.41	24.88	4.35	**C0823-125-9500-S**	6.466	164.23	65.65	292.02	21.64	3.79
C0823-135-1250-M	0.823	20.90	0.135	3.43	1.250	31.75	0.928	23.58	0.915	23.24	105.91	471.11	329.11	57.59	**C0823-135-1250-S**	0.970	24.63	80.27	357.07	286.18	50.08
C0823-135-1375-M	0.823	20.90	0.135	3.43	1.375	34.93	1.012	25.71	0.996	25.29	105.91	471.11	291.88	51.08	**C0823-135-1375-S**	1.059	26.89	80.27	357.07	253.81	44.42
C0823-135-1500-M	0.823	20.90	0.135	3.43	1.500	38.10	1.096	27.84	1.076	27.33	105.91	471.11	262.22	45.89	**C0823-135-1500-S**	1.148	29.16	80.27	357.07	228.02	39.90
C0823-135-1625-M	0.823	20.90	0.135	3.43	1.625	41.28	1.180	29.97	1.157	29.38	105.91	471.11	238.03	41.66	**C0823-135-1625-S**	1.237	31.42	80.27	357.07	206.98	36.22
C0823-135-1750-M	0.823	20.90	0.135	3.43	1.750	44.45	1.264	32.11	1.237	31.42	105.91	471.11	217.93	38.14	**C0823-135-1750-S**	1.326	33.69	80.27	357.07	189.50	33.16
C0823-135-1875-M	0.823	20.90	0.135	3.43	1.875	47.63	1.348	34.24	1.318	33.47	105.91	471.11	200.95	35.17	**C0823-135-1875-S**	1.416	35.96	80.27	357.07	174.74	30.58
C0823-135-2000-M	0.823	20.90	0.135	3.43	2.000	50.80	1.432	36.37	1.398	35.52	105.91	471.11	186.43	32.63	**C0823-135-2000-S**	1.505	38.22	80.27	357.07	162.12	28.37
C0823-135-2125-M	0.823	20.90	0.135	3.43	2.125	53.98	1.516	38.50	1.479	37.56	105.91	471.11	173.87	30.43	**C0823-135-2125-S**	1.594	40.49	80.27	357.07	151.19	26.46
C0823-135-2250-M	0.823	20.90	0.135	3.43	2.250	57.15	1.600	40.64	1.559	39.61	105.91	471.11	162.89	28.51	**C0823-135-2250-S**	1.683	42.76	80.27	357.07	141.65	24.79
C0823-135-2375-M	0.823	20.90	0.135	3.43	2.375	60.33	1.684	42.77	1.640	41.65	105.91	471.11	153.22	26.81	**C0823-135-2375-S**	1.773	45.02	80.27	357.07	133.24	23.32
C0823-135-2500-M	0.823	20.90	0.135	3.43	2.500	63.50	1.768	44.90	1.720	43.70	105.91	471.11	144.63	25.31	**C0823-135-2500-S**	1.862	47.29	80.27	357.07	125.77	22.01
C0823-135-2625-M	0.823	20.90	0.135	3.43	2.625	66.68	1.852	47.03	1.801	45.74	105.91	471.11	136.96	23.97	**C0823-135-2625-S**	1.951	49.55	80.27	357.07	119.09	20.84
C0823-135-2750-M	0.823	20.90	0.135	3.43	2.750	69.85	1.936	49.17	1.882	47.79	105.91	471.11	130.05	22.76	**C0823-135-2750-S**	2.040	51.82	80.27	357.07	113.09	19.79
C0823-135-2875-M	0.823	20.90	0.135	3.43	2.875	73.03	2.020	51.30	1.962	49.84	105.91	471.11	123.81	21.67	**C0823-135-2875-S**	2.129	54.09	80.27	357.07	107.66	18.84
C0823-135-3000-M	0.823	20.90	0.135	3.43	3.000	76.20	2.104	53.43	2.043	51.88	105.91	471.11	118.14	20.68	**C0823-135-3000-S**	2.219	56.35	80.27	357.07	102.73	17.98
C0823-135-3250-M	0.823	20.90	0.135	3.43	3.250	82.55	2.271	57.69	2.204	55.97	105.91	471.11	108.23	18.94	**C0823-135-3250-S**	2.397	60.89	80.27	357.07	94.11	16.47
C0823-135-3500-M	0.823	20.90	0.135	3.43	3.500	88.90	2.439	61.96	2.365	60.07	105.91	471.11	99.85	17.47	**C0823-135-3500-S**	2.576	65.42	80.27	357.07	86.83	15.20
C0823-135-3750-M	0.823	20.90	0.135	3.43	3.750	95.25	2.607	66.22	2.526	64.16	105.91	471.11	92.68	16.22	**C0823-135-3750-S**	2.754	69.95	80.27	357.07	80.59	14.10
C0823-135-4000-M	0.823	20.90	0.135	3.43	4.000	101.60	2.775	70.49	2.687	68.25	105.91	471.11	86.47	15.13	**C0823-135-4000-S**	2.932	74.48	80.27	357.07	75.19	13.16
C0823-135-4250-M	0.823	20.90	0.135	3.43	4.250	107.95	2.943	74.75	2.848	72.34	105.91	471.11	81.04	14.18	**C0823-135-4250-S**	3.111	79.02	80.27	357.07	70.47	12.33
C0823-135-4500-M	0.823	20.90	0.135	3.43	4.500	114.30	3.111	79.02	3.009	76.43	105.91	471.11	76.25	13.34	**C0823-135-4500-S**	3.289	83.55	80.27	357.07	66.30	11.60
C0823-135-4750-M	0.823	20.90	0.135	3.43	4.750	120.65	3.279	83.28	3.170	80.52	105.91	471.11	71.99	12.60	**C0823-135-4750-S**	3.468	88.08	80.27	357.07	62.60	10.96
C0823-135-5000-M	0.823	20.90	0.135	3.43	5.000	127.00	3.447	87.55	3.331	84.62	105.91	471.11	68.19	11.93	**C0823-135-5000-S**	3.646	92.61	80.27	357.07	59.29	10.38
C0823-135-5250-M	0.823	20.90	0.135	3.43	5.250	133.35	3.615	91.81	3.492	88.71	105.91	471.11	64.77	11.33	**C0823-135-5250-S**	3.825	97.15	80.27	357.07	56.32	9.86
C0823-135-5500-M	0.823	20.90	0.135	3.43	5.500	139.70	3.783	96.08	3.654	92.80	105.91	471.11	61.67	10.79	**C0823-135-5500-S**	4.003	101.68	80.27	357.07	53.63	9.38
C0823-135-5750-M	0.823	20.90	0.135	3.43	5.750	146.05	3.951	100.34	3.815	96.89	105.91	471.11	58.86	10.30	**C0823-135-5750-S**	4.182	106.21	80.27	357.07	51.18	8.96
C0823-135-6000-M	0.823	20.90	0.135	3.43	6.000	152.40	4.118	104.61	3.976	100.98	105.91	471.11	56.29	9.85	**C0823-135-6000-S**	4.360	110.74	80.27	357.07	48.95	8.57
C0823-135-6250-M	0.823	20.90	0.135	3.43	6.250	158.75	4.286	108.87	4.137	105.07	105.91	471.11	53.94	9.44	**C0823-135-6250-S**	4.538	115.28	80.27	357.07	46.90	8.21
C0823-135-6500-M	0.823	20.90	0.135	3.43	6.500	165.10	4.454	113.14	4.298	109.17	105.91	471.11	51.77	9.06	**C0823-135-6500-S**	4.717	119.81	80.27	357.07	45.02	7.88
C0823-135-6750-M	0.823	20.90	0.135	3.43	6.750	171.45	4.622	117.40	4.459	113.26	105.91	471.11	49.77	8.71	**C0823-135-6750-S**	4.895	124.34	80.27	357.07	43.28	7.57
C0823-135-7000-M	0.823	20.90	0.135	3.43	7.000	177.80	4.790	121.67	4.620	117.35	105.91	471.11	47.92	8.39	**C0823-135-7000-S**	5.074	128.87	80.27	357.07	41.67	7.29

FOR INFORMATION ON ALTERNATIVE FINISHES, SEE PAGE 311

Part Numbers with an "*" are squared and not ground. **Part Numbers in bold** represent the newly expanded Associated Spring RAYMOND compression spring offering.

MUSIC WIRE																STAINLESS STEEL						
Catalog #	Outside Diameter (OD)		Wire Diameter (d)		Free Length (L) Approx		Load Length (L_1)		Solid Height (Sh) Approx		Load (P) at L_1		Spring Rate (R)		Catalog #	Load Length (L_1)		Load (P) at L_1		Spring Rate (R)	
	in	mm	in	mm	in	mm	in	mm	in	mm	lb	N	lb/in	N/mm		in	mm	lb	N	lb/in	N/mm
C0823-135-7500-M	**0.823**	**20.90**	**0.135**	**3.43**	**7.500**	**190.50**	**5.126**	**130.20**	**4.942**	**125.53**	**105.91**	**471.11**	**44.61**	**7.81**	**C0823-135-7500-S**	**5.431**	**137.94**	**80.27**	**357.07**	**38.79**	**6.79**
C0823-135-8000-M	**0.823**	**20.90**	**0.135**	**3.43**	**8.000**	**203.20**	**5.462**	**138.73**	**5.264**	**133.72**	**105.91**	**471.11**	**41.72**	**7.30**	**C0823-135-8000-S**	**5.788**	**147.00**	**80.27**	**357.07**	**36.28**	**6.35**
C0823-135-8500-M	**0.823**	**20.90**	**0.135**	**3.43**	**8.500**	**215.90**	**5.798**	**147.26**	**5.587**	**141.90**	**105.91**	**471.11**	**39.19**	**6.86**	**C0823-135-8500-S**	**6.144**	**156.07**	**80.27**	**357.07**	**34.08**	**5.96**
C0823-135-9000-M	**0.823**	**20.90**	**0.135**	**3.43**	**9.000**	**228.60**	**6.133**	**155.79**	**5.909**	**150.08**	**105.91**	**471.11**	**36.95**	**6.47**	**C0823-135-9000-S**	**6.501**	**165.13**	**80.27**	**357.07**	**32.13**	**5.62**
C0823-135-9500-M	**0.823**	**20.90**	**0.135**	**3.43**	**9.500**	**241.30**	**6.469**	**164.32**	**6.231**	**158.27**	**105.91**	**471.11**	**34.94**	**6.12**	**C0823-135-9500-S**	**6.858**	**174.20**	**80.27**	**357.07**	**30.39**	**5.32**
C0823-148-1250-M	**0.823**	**20.90**	**0.148**	**3.76**	**1.250**	**31.75**	**1.027**	**26.08**	**0.987**	**25.08**	**115.05**	**511.77**	**515.17**	**90.15**	**C0823-148-1250-S**	**1.023**	**25.98**	**101.79**	**452.80**	**447.97**	**78.40**
C0823-148-1375-M	**0.823**	**20.90**	**0.148**	**3.76**	**1.375**	**34.93**	**1.077**	**27.36**	**1.076**	**27.33**	**135.64**	**603.35**	**455.49**	**79.71**	**C0823-148-1375-S**	**1.118**	**28.40**	**101.79**	**452.80**	**396.08**	**69.31**
C0823-148-1500-M	**0.823**	**20.90**	**0.148**	**3.76**	**1.500**	**38.10**	**1.168**	**29.66**	**1.165**	**29.58**	**135.64**	**603.35**	**408.20**	**71.43**	**C0823-148-1500-S**	**1.213**	**30.82**	**101.79**	**452.80**	**354.96**	**62.12**
C0823-148-1625-M	**0.823**	**20.90**	**0.148**	**3.76**	**1.625**	**41.28**	**1.258**	**31.96**	**1.253**	**31.83**	**135.64**	**603.35**	**369.81**	**64.72**	**C0823-148-1625-S**	**1.308**	**33.23**	**101.79**	**452.80**	**321.57**	**56.27**
C0823-148-1750-M	**0.823**	**20.90**	**0.148**	**3.76**	**1.750**	**44.45**	**1.349**	**34.26**	**1.342**	**34.08**	**135.64**	**603.35**	**338.01**	**59.15**	**C0823-148-1750-S**	**1.404**	**35.65**	**101.79**	**452.80**	**293.93**	**51.44**
C0823-148-1875-M	**0.823**	**20.90**	**0.148**	**3.76**	**1.875**	**47.63**	**1.439**	**36.56**	**1.430**	**36.33**	**135.64**	**603.35**	**311.26**	**54.47**	**C0823-148-1875-S**	**1.499**	**38.07**	**101.79**	**452.80**	**270.66**	**47.36**
C0823-148-2000-M	**0.823**	**20.90**	**0.148**	**3.76**	**2.000**	**50.80**	**1.530**	**38.86**	**1.519**	**38.58**	**135.64**	**603.35**	**288.42**	**50.47**	**C0823-148-2000-S**	**1.594**	**40.49**	**101.79**	**452.80**	**250.80**	**43.89**
C0823-148-2125-M	**0.823**	**20.90**	**0.148**	**3.76**	**2.125**	**53.98**	**1.620**	**41.15**	**1.608**	**40.84**	**135.64**	**603.35**	**268.71**	**47.02**	**C0823-148-2125-S**	**1.689**	**42.91**	**101.79**	**452.80**	**233.66**	**40.89**
C0823-148-2250-M	**0.823**	**20.90**	**0.148**	**3.76**	**2.250**	**57.15**	**1.711**	**43.45**	**1.696**	**43.09**	**135.64**	**603.35**	**251.52**	**44.02**	**C0823-148-2250-S**	**1.785**	**45.33**	**101.79**	**452.80**	**218.71**	**38.27**
C0823-148-2375-M	**0.823**	**20.90**	**0.148**	**3.76**	**2.375**	**60.33**	**1.801**	**45.75**	**1.785**	**45.34**	**135.64**	**603.35**	**236.40**	**41.37**	**C0823-148-2375-S**	**1.880**	**47.75**	**101.79**	**452.80**	**205.56**	**35.97**
C0823-148-2500-M	**0.823**	**20.90**	**0.148**	**3.76**	**2.500**	**63.50**	**1.892**	**48.05**	**1.874**	**47.59**	**135.64**	**603.35**	**222.99**	**39.02**	**C0823-148-2500-S**	**1.975**	**50.17**	**101.79**	**452.80**	**193.91**	**33.93**
C0823-148-2625-M	**0.823**	**20.90**	**0.148**	**3.76**	**2.625**	**66.68**	**1.982**	**50.35**	**1.962**	**49.84**	**135.64**	**603.35**	**211.02**	**36.93**	**C0823-148-2625-S**	**2.070**	**52.58**	**101.79**	**452.80**	**183.50**	**32.11**
C0823-148-2750-M	**0.823**	**20.90**	**0.148**	**3.76**	**2.750**	**69.85**	**2.073**	**52.65**	**2.051**	**52.09**	**135.64**	**603.35**	**200.27**	**35.05**	**C0823-148-2750-S**	**2.165**	**55.00**	**101.79**	**452.80**	**174.15**	**30.48**
C0823-148-2875-M	**0.823**	**20.90**	**0.148**	**3.76**	**2.875**	**73.03**	**2.163**	**54.95**	**2.140**	**54.34**	**135.64**	**603.35**	**190.57**	**33.35**	**C0823-148-2875-S**	**2.261**	**57.42**	**101.79**	**452.80**	**165.71**	**29.00**
C0823-148-3000-M	**0.823**	**20.90**	**0.148**	**3.76**	**3.000**	**76.20**	**2.254**	**57.25**	**2.228**	**56.60**	**135.64**	**603.35**	**181.76**	**31.81**	**C0823-148-3000-S**	**2.356**	**59.84**	**101.79**	**452.80**	**158.05**	**27.66**
C0823-148-3250-M	**0.823**	**20.90**	**0.148**	**3.76**	**3.250**	**82.55**	**2.435**	**61.84**	**2.405**	**61.10**	**135.64**	**603.35**	**166.38**	**29.12**	**C0823-148-3250-S**	**2.546**	**64.68**	**101.79**	**452.80**	**144.67**	**25.32**
C0823-148-3500-M	**0.823**	**20.90**	**0.148**	**3.76**	**3.500**	**88.90**	**2.616**	**66.44**	**2.583**	**65.60**	**135.64**	**603.35**	**153.39**	**26.84**	**C0823-148-3500-S**	**2.737**	**69.52**	**101.79**	**452.80**	**133.39**	**23.34**
C0823-148-3750-M	**0.823**	**20.90**	**0.148**	**3.76**	**3.750**	**95.25**	**2.797**	**71.04**	**2.760**	**70.10**	**135.64**	**603.35**	**142.29**	**24.90**	**C0823-148-3750-S**	**2.927**	**74.35**	**101.79**	**452.80**	**123.73**	**21.65**
C0823-148-4000-M	**0.823**	**20.90**	**0.148**	**3.76**	**4.000**	**101.60**	**2.978**	**75.64**	**2.937**	**74.61**	**135.64**	**603.35**	**132.69**	**23.22**	**C0823-148-4000-S**	**3.118**	**79.19**	**101.79**	**452.80**	**115.38**	**20.19**
C0823-148-4250-M	**0.823**	**20.90**	**0.148**	**3.76**	**4.250**	**107.95**	**3.159**	**80.23**	**3.115**	**79.11**	**135.64**	**603.35**	**124.30**	**21.75**	**C0823-148-4250-S**	**3.308**	**84.03**	**101.79**	**452.80**	**108.09**	**18.91**
C0823-148-4500-M	**0.823**	**20.90**	**0.148**	**3.76**	**4.500**	**114.30**	**3.340**	**84.83**	**3.292**	**83.61**	**135.64**	**603.35**	**116.91**	**20.46**	**C0823-148-4500-S**	**3.499**	**88.87**	**101.79**	**452.80**	**101.66**	**17.79**
C0823-148-4750-M	**0.823**	**20.90**	**0.148**	**3.76**	**4.750**	**120.65**	**3.521**	**89.43**	**3.469**	**88.11**	**135.64**	**603.35**	**110.34**	**19.31**	**C0823-148-4750-S**	**3.689**	**93.70**	**101.79**	**452.80**	**95.95**	**16.79**
C0823-148-5000-M	**0.823**	**20.90**	**0.148**	**3.76**	**5.000**	**127.00**	**3.702**	**94.03**	**3.646**	**92.62**	**135.64**	**603.35**	**104.48**	**18.28**	**C0823-148-5000-S**	**3.880**	**98.54**	**101.79**	**452.80**	**90.85**	**15.90**
C0823-148-5250-M	**0.823**	**20.90**	**0.148**	**3.76**	**5.250**	**133.35**	**3.883**	**98.62**	**3.824**	**97.12**	**135.64**	**603.35**	**99.21**	**17.36**	**C0823-148-5250-S**	**4.070**	**103.38**	**101.79**	**452.80**	**86.27**	**15.10**
C0823-148-5500-M	**0.823**	**20.90**	**0.148**	**3.76**	**5.500**	**139.70**	**4.064**	**103.22**	**4.001**	**101.62**	**135.64**	**603.35**	**94.44**	**16.53**	**C0823-148-5500-S**	**4.260**	**108.22**	**101.79**	**452.80**	**82.12**	**14.37**
C0823-148-5750-M	**0.823**	**20.90**	**0.148**	**3.76**	**5.750**	**146.05**	**4.245**	**107.82**	**4.178**	**106.12**	**135.64**	**603.35**	**90.11**	**15.77**	**C0823-148-5750-S**	**4.451**	**113.05**	**101.79**	**452.80**	**78.36**	**13.71**
C0823-148-6000-M	**0.823**	**20.90**	**0.148**	**3.76**	**6.000**	**152.40**	**4.426**	**112.42**	**4.355**	**110.63**	**135.64**	**603.35**	**86.16**	**15.08**	**C0823-148-6000-S**	**4.641**	**117.89**	**101.79**	**452.80**	**74.92**	**13.11**
C0823-148-6250-M	**0.823**	**20.90**	**0.148**	**3.76**	**6.250**	**158.75**	**4.607**	**117.01**	**4.533**	**115.13**	**135.64**	**603.35**	**82.55**	**14.45**	**C0823-148-6250-S**	**4.832**	**122.73**	**101.79**	**452.80**	**71.78**	**12.56**
C0823-148-6500-M	**0.823**	**20.90**	**0.148**	**3.76**	**6.500**	**165.10**	**4.788**	**121.61**	**4.710**	**119.63**	**135.64**	**603.35**	**79.22**	**13.86**	**C0823-148-6500-S**	**5.022**	**127.57**	**101.79**	**452.80**	**68.89**	**12.06**
C0823-148-6750-M	**0.823**	**20.90**	**0.148**	**3.76**	**6.750**	**171.45**	**4.969**	**126.21**	**4.887**	**124.14**	**135.64**	**603.35**	**76.15**	**13.33**	**C0823-148-6750-S**	**5.213**	**132.40**	**101.79**	**452.80**	**66.22**	**11.59**
C0823-148-7000-M	**0.823**	**20.90**	**0.148**	**3.76**	**7.000**	**177.80**	**5.150**	**130.81**	**5.064**	**128.64**	**135.64**	**603.35**	**73.31**	**12.83**	**C0823-148-7000-S**	**5.403**	**137.24**	**101.79**	**452.80**	**63.75**	**11.16**
C0823-148-7500-M	**0.823**	**20.90**	**0.148**	**3.76**	**7.500**	**190.50**	**5.512**	**140.00**	**5.419**	**137.64**	**135.64**	**603.35**	**68.22**	**11.94**	**C0823-148-7500-S**	**5.784**	**146.92**	**101.79**	**452.80**	**59.32**	**10.38**
C0823-148-8000-M	**0.823**	**20.90**	**0.148**	**3.76**	**8.000**	**203.20**	**5.874**	**149.20**	**5.774**	**146.65**	**135.64**	**603.35**	**63.79**	**11.16**	**C0823-148-8000-S**	**6.165**	**156.59**	**101.79**	**452.80**	**55.47**	**9.71**
C0823-148-8500-M	**0.823**	**20.90**	**0.148**	**3.76**	**8.500**	**215.90**	**6.236**	**158.39**	**6.128**	**155.65**	**135.64**	**603.35**	**59.91**	**10.48**	**C0823-148-8500-S**	**6.546**	**166.27**	**101.79**	**452.80**	**52.09**	**9.12**
C0823-148-9000-M	**0.823**	**20.90**	**0.148**	**3.76**	**9.000**	**228.60**	**6.598**	**167.59**	**6.483**	**164.66**	**135.64**	**603.35**	**56.47**	**9.88**	**C0823-148-9000-S**	**6.927**	**175.94**	**101.79**	**452.80**	**49.10**	**8.59**
C0823-148-9500-M	**0.823**	**20.90**	**0.148**	**3.76**	**9.500**	**241.30**	**6.960**	**176.78**	**6.837**	**173.66**	**135.64**	**603.35**	**53.40**	**9.34**	**C0823-148-9500-S**	**7.308**	**185.62**	**101.79**	**452.80**	**46.43**	**8.13**
C0823-162-1250-M	**0.823**	**20.90**	**0.162**	**4.12**	**1.250**	**31.75**	**1.082**	**27.48**	**1.052**	**26.73**	**137.69**	**612.48**	**819.00**	**143.32**	**C0823-162-1250-S**	**1.070**	**27.18**	**128.13**	**569.95**	**712.17**	**124.63**
C0823-162-1375-M	**0.823**	**20.90**	**0.162**	**4.12**	**1.375**	**34.93**	**1.182**	**30.03**	**1.148**	**29.17**	**139.03**	**618.45**	**721.59**	**126.28**	**C0823-162-1375-S**	**1.171**	**29.74**	**128.13**	**569.95**	**627.47**	**109.81**
C0823-162-1500-M	**0.823**	**20.90**	**0.162**	**4.12**	**1.500**	**38.10**	**1.283**	**32.58**	**1.244**	**31.61**	**140.09**	**623.15**	**644.89**	**112.86**	**C0823-162-1500-S**	**1.272**	**32.30**	**128.13**	**569.95**	**560.78**	**98.14**
C0823-162-1625-M	**0.823**	**20.90**	**0.162**	**4.12**	**1.625**	**41.28**	**1.383**	**35.13**	**1.341**	**34.05**	**140.94**	**626.94**	**582.93**	**102.01**	**C0823-162-1625-S**	**1.372**	**34.85**	**128.13**	**569.95**	**506.90**	**88.71**
C0823-162-1750-M	**0.823**	**20.90**	**0.162**	**4.12**	**1.750**	**44.45**	**1.484**	**37.69**	**1.437**	**36.49**	**141.65**	**630.07**	**531.83**	**93.07**	**C0823-162-1750-S**	**1.473**	**37.41**	**128.13**	**569.95**	**462.46**	**80.93**
C0823-162-1875-M	**0.823**	**20.90**	**0.162**	**4.12**	**1.875**	**47.63**	**1.584**	**40.24**	**1.533**	**38.93**	**142.24**	**632.70**	**488.97**	**85.57**	**C0823-162-1875-S**	**1.574**	**39.97**	**128.13**	**569.95**	**425.19**	**74.41**
C0823-162-2000-M	**0.823**	**20.90**	**0.162**	**4.12**	**2.000**	**50.80**	**1.685**	**42.79**	**1.629**	**41.37**	**142.74**	**634.93**	**452.50**	**79.19**	**C0823-162-2000-S**	**1.674**	**42.53**	**128.13**	**569.95**	**393.48**	**68.86**
C0823-162-2125-M	**0.823**	**20.90**	**0.162**	**4.12**	**2.125**	**53.98**	**1.785**	**45.34**	**1.725**	**43.82**	**143.17**	**636.86**	**421.10**	**73.69**	**C0823-162-2125-S**	**1.775**	**45.09**	**128.13**	**569.95**	**366.17**	**64.08**
C0823-162-2250-M	**0.823**	**20.90**	**0.162**	**4.12**	**2.250**	**57.15**	**1.885**	**47.89**	**1.821**	**46.26**	**143.55**	**638.53**	**393.77**	**68.91**	**C0823-162-2250-S**	**1.876**	**47.65**	**128.13**	**569.95**	**342.41**	**59.92**
C0823-162-2375-M	**0.823**	**20.90**	**0.162**	**4.12**	**2.375**	**60.33**	**1.986**	**50.44**	**1.917**	**48.70**	**143.88**	**640.00**	**369.77**	**64.71**	**C0823-162-2375-S**	**1.977**	**50.20**	**128.13**	**569.95**	**321.54**	**56.27**
C0823-162-2500-M	**0.823**	**20.90**	**0.162**	**4.12**	**2.500**	**63.50**	**2.086**	**52.99**	**2.013**	**51.14**	**144.17**	**641.30**	**348.53**	**60.99**	**C0823-162-2500-S**	**2.077**	**52.76**	**128.13**	**569.95**	**303.07**	**53.04**
C0823-162-2625-M	**0.823**	**20.90**	**0.162**	**4.12**	**2.625**	**66.68**	**2.187**	**55.54**	**2.109**	**53.58**	**144.43**	**642.46**	**329.59**	**57.68**	**C0823-162-2625-S**	**2.178**	**55.32**	**128.13**	**569.95**	**286.60**	**50.16**
C0823-162-2750-M	**0.823**	**20.90**	**0.162**	**4.12**	**2.750**	**69.85**	**2.287**	**58.10**	**2.206**	**56.02**	**144.67**	**643.50**	**312.61**	**54.71**	**C0823-162-2750-S**	**2.279**	**57.88**	**128.13**	**569.95**	**271.84**	**47.57**
C0823-162-2875-M	**0.823**	**20.90**	**0.162**	**4.12**	**2.875**	**73.03**	**2.388**	**60.65**	**2.302**	**58.46**	**144.88**	**644.44**	**297.29**	**52.03**	**C0823-162-2875-S**	**2.379**	**60.44**	**128.13**	**569.95**	**258.52**	**45.24**
C0823-162-3000-M	**0.823**	**20.90**	**0.162**	**4.12**	**3.000**	**76.20**	**2.488**	**63.20**	**2.398**	**60.90**	**145.07**	**645.29**	**283.41**	**49.60**	**C0823-162-3000-S**	**2.480**	**62.99**	**128.13**	**569.95**	**246.44**	**43.13**
C0823-162-3250-M	**0.823**	**20.90**	**0.162**	**4.12**	**3.250**	**82.55**	**2.689**	**68.30**	**2.590**	**65.79**	**145.40**	**646.77**	**259.19**	**45.36**	**C0823-162-3250-S**	**2.682**	**68.11**	**128.13**	**569.95**	**225.38**	**39.44**
C0823-162-3500-M	**0.823**	**20.90**	**0.162**	**4.12**	**3.500**	**88.90**	**2.890**	**73.40**	**2.782**	**70.67**	**145.68**	**648.02**	**238.79**	**41.79**	**C0823-162-3500-S**	**2.883**	**73.23**	**128.13**	**569.95**	**207.64**	**36.34**
C0823-162-3750-M	**0.823**	**20.90**	**0.162**	**4.12**	**3.750**	**95.25**	**3.091**	**78.51**	**2.974**	**75.55**	**145.92**	**649.09**	**221.36**	**38.74**	**C0823-162-3750-S**	**3.084**	**78.34**	**128.13**	**569.95**	**192.49**	**33.69**
C0823-162-4000-M	**0.823**	**20.90**	**0.162**	**4.12**	**4.000**	**101.60**	**3.292**	**83.61**	**3.167**	**80.43**	**146.13**	**650.01**	**206.31**	**36.10**	**C0823-162-4000-S**	**3.286**	**83.46**	**128.13**	**569.95**	**179.40**	**31.39**
C0823-162-4250-M	**0.823**	**20.90**	**0.162**	**4.12**	**4.250**	**107.95**	**3.493**	**88.71**	**3.359**	**85.32**	**146.31**	**650.82**	**193.17**	**33.81**	**C0823-162-4250-S**	**3.487**	**88.58**	**128.13**	**569.95**	**167.98**	**29.40**
C0823-162-4500-M	**0.823**	**20.90**	**0.162**	**4.12**	**4.500**	**114.30**	**3.693**	**93.81**	**3.551**	**90.20**	**146.47**	**651.53**	**181.61**	**31.78**	**C0823-162-4500-S**	**3.689**	**93.69**	**128.13**	**569.95**	**157.92**	**27.64**
C0823-162-4750-M	**0.823**	**20.90**	**0.162**	**4.12**	**4.750**	**120.65**	**3.894**	**98.92**	**3.743**	**95.08**	**146.61**	**652.15**	**171.35**	**29.99**	**C0823-162-4750-S**	**3.890**	**98.81**	**128.13**	**569.95**	**149.00**	**26.07**
C0823-162-5000-M	**0.823**	**20.90**	**0.162**	**4.12**	**5.000**	**127.00**	**3.936**	**99.97**	**3.936**	**99.96**	**172.57**	**767.64**	**162.19**	**28.38**	**C0823-162-5000-S**	**4.091**	**103.92**	**128.13**	**569.95**	**141.03**	**24.68**

Part Numbers with an "*" are squared and not ground. **Part Numbers in bold** represent the newly expanded Associated Spring RAYMOND compression spring offering.

MUSIC WIRE															STAINLESS STEEL					
Catalog #	Outside Diameter (OD)		Wire Diameter (d)		Free Length (L) Approx		Load Length (L_1)		Solid Height (Sh) Approx		Load (P) at L_1		Spring Rate (R)		Catalog #	Load Length (L_1)		Load (P) at L_1		Spring Rate (R)	
	in	mm	in	mm	in	mm	in	mm	in	mm	lb	N	lb/in	N/mm		in	mm	lb	N	lb/in	N/mm
C0823-162-5250-M	0.823	20.90	0.162	4.12	5.250	133.35	4.129	104.88	4.128	104.85	172.57	767.64	153.96	26.94	**C0823-162-5250-S**	4.293	109.04	128.13	569.95	133.88	23.43
C0823-162-5500-M	0.823	20.90	0.162	4.12	5.500	139.70	4.322	109.78	4.320	109.73	172.57	767.64	146.52	25.64	**C0823-162-5500-S**	4.494	114.16	128.13	569.95	127.41	22.30
C0823-162-5750-M	0.823	20.90	0.162	4.12	5.750	146.05	4.515	114.69	4.512	114.61	172.57	767.64	139.77	24.46	**C0823-162-5750-S**	4.696	119.27	128.13	569.95	121.54	21.27
C0823-162-6000-M	0.823	20.90	0.162	4.12	6.000	152.40	4.708	119.59	4.705	119.49	172.57	767.64	133.61	23.38	**C0823-162-6000-S**	4.897	124.39	128.13	569.95	116.19	20.33
C0823-162-6250-M	0.823	20.90	0.162	4.12	6.250	158.75	4.902	124.50	4.897	124.38	172.57	767.64	127.98	22.40	**C0823-162-6250-S**	5.099	129.51	128.13	569.95	111.28	19.47
C0823-162-6500-M	0.823	20.90	0.162	4.12	6.500	165.10	5.095	129.40	5.089	129.26	172.57	767.64	122.80	21.49	**C0823-162-6500-S**	5.300	134.62	128.13	569.95	106.78	18.69
C0823-162-6750-M	0.823	20.90	0.162	4.12	6.750	171.45	5.288	134.31	5.281	134.14	172.57	767.64	118.02	20.65	**C0823-162-6750-S**	5.501	139.74	128.13	569.95	102.63	17.96
C0823-162-7000-M	0.823	20.90	0.162	4.12	7.000	177.80	5.481	139.21	5.473	139.03	172.57	767.64	113.60	19.88	**C0823-162-7000-S**	5.703	144.85	128.13	569.95	98.78	17.29
C0823-162-7500-M	0.823	20.90	0.162	4.12	7.500	190.50	5.867	149.02	5.858	148.79	172.57	767.64	105.68	18.49	**C0823-162-7500-S**	6.106	155.09	128.13	569.95	91.90	16.08
C0823-162-8000-M	0.823	20.90	0.162	4.12	8.000	203.20	6.253	158.83	6.242	158.56	172.57	767.64	98.80	17.29	**C0823-162-8000-S**	6.509	165.32	128.13	569.95	85.91	15.03
C0823-162-8500-M	0.823	20.90	0.162	4.12	8.500	215.90	6.640	168.64	6.627	168.32	172.57	767.64	92.76	16.23	**C0823-162-8500-S**	6.911	175.55	128.13	569.95	80.66	14.12
C0823-162-9000-M	0.823	20.90	0.162	4.12	9.000	228.60	7.026	178.45	7.011	178.09	172.57	767.64	87.41	15.30	**C0823-162-9000-S**	7.314	185.78	128.13	569.95	76.01	13.30
C0823-162-9500-M	0.823	20.90	0.162	4.12	9.500	241.30	7.412	188.26	7.396	187.85	172.57	767.64	82.65	14.46	**C0823-162-9500-S**	7.717	196.02	128.13	569.95	71.87	12.58
C0845-050-0750-M	0.845	21.46	0.050	1.27	0.750	19.05	0.244	6.19	0.162	4.11	6.58	29.29	13.00	2.28	**C0845-050-0750-S**	0.264	6.70	5.26	23.41	10.83	1.90
C0845-050-0875-M	0.845	21.46	0.050	1.27	0.875	22.23	0.275	6.98	0.177	4.50	6.54	29.10	10.90	1.91	**C0845-050-0875-S**	0.295	7.50	5.26	23.41	9.08	1.59
C0845-050-1000-M	0.845	21.46	0.050	1.27	1.000	25.40	0.306	7.77	0.193	4.89	6.52	29.02	9.40	1.65	**C0845-050-1000-S**	0.328	8.33	5.26	23.41	7.83	1.37
C0845-050-1250-M	0.845	21.46	0.050	1.27	1.250	31.75	0.369	9.38	0.225	5.70	6.43	28.60	7.30	1.28	**C0845-050-1250-S**	0.384	9.76	5.26	23.41	6.08	1.06
C0845-050-1500-M	0.845	21.46	0.050	1.27	1.500	38.10	0.432	10.97	0.256	6.49	6.41	28.51	6.00	1.05	**C0845-050-1500-S**	0.447	11.35	5.26	23.41	5.00	0.87
C0845-050-2000-M	0.845	21.46	0.050	1.27	2.000	50.80	0.558	14.17	0.318	8.09	6.35	28.23	4.40	0.77	**C0845-050-2000-S**	0.564	14.32	5.26	23.41	3.67	0.64
C0845-050-2500-M	0.845	21.46	0.050	1.27	2.500	63.50	0.677	17.20	0.373	9.48	6.38	28.38	3.50	0.61	**C0845-050-2500-S**	0.695	17.64	5.26	23.41	2.92	0.51
C0845-050-3000-M	0.845	21.46	0.050	1.27	3.000	76.20	0.797	20.24	0.429	10.89	6.39	28.42	2.90	0.51	**C0845-050-3000-S**	0.821	20.85	5.26	23.41	2.42	0.42
C0845-050-3500-M	0.845	21.46	0.050	1.27	3.500	88.90	0.914	23.21	0.480	12.20	6.47	28.76	2.50	0.44	**C0845-050-3500-S**	0.972	24.70	5.26	23.41	2.08	0.36
C0845-050-4000-M	0.845	21.46	0.050	1.27	4.000	101.60	1.030	26.17	0.532	13.51	6.53	29.06	2.20	0.39	**C0845-050-4000-S**	1.128	28.64	5.26	23.41	1.83	0.32
C0845-055-0750-M	0.845	21.46	0.055	1.40	0.750	19.05	0.262	6.65	0.185	4.69	8.81	39.18	18.05	3.16	**C0845-055-0750-S**	0.293	7.44	6.87	30.56	15.04	2.63
C0845-055-0875-M	0.845	21.46	0.055	1.40	0.875	22.23	0.296	7.51	0.203	5.16	8.75	38.91	15.10	2.64	**C0845-055-0875-S**	0.329	8.35	6.87	30.56	12.58	2.20
C0845-055-1000-M	0.845	21.46	0.055	1.40	1.000	25.40	0.329	8.37	0.222	5.63	8.70	38.71	12.98	2.27	**C0845-055-1000-S**	0.365	9.26	6.87	30.56	10.81	1.89
C0845-055-1250-M	0.845	21.46	0.055	1.40	1.250	31.75	0.397	10.08	0.259	6.57	8.64	38.44	10.13	1.77	**C0845-055-1250-S**	0.436	11.07	6.87	30.56	8.44	1.48
C0845-055-1500-M	0.845	21.46	0.055	1.40	1.500	38.10	0.464	11.80	0.296	7.51	8.61	38.28	8.31	1.45	**C0845-055-1500-S**	0.507	12.89	6.87	30.56	6.92	1.21
C0845-055-2000-M	0.845	21.46	0.055	1.40	2.000	50.80	0.598	15.18	0.368	9.34	8.57	38.11	6.11	1.07	**C0845-055-2000-S**	0.650	16.51	6.87	30.56	5.09	0.89
C0845-055-2500-M	0.845	21.46	0.055	1.40	2.500	63.50	0.727	18.46	0.434	11.04	8.56	38.10	4.83	0.85	**C0845-055-2500-S**	0.792	20.12	6.87	30.56	4.02	0.70
C0845-055-3000-M	0.845	21.46	0.055	1.40	3.000	76.20	0.855	21.73	0.501	12.72	8.58	38.16	4.00	0.70	**C0845-055-3000-S**	0.938	23.82	6.87	30.56	3.33	0.58
C0845-055-3500-M	0.845	21.46	0.055	1.40	3.500	88.90	0.984	25.00	0.567	14.41	8.58	38.16	3.41	0.60	**C0845-055-3500-S**	1.081	27.46	6.87	30.56	2.84	0.50
C0845-055-4000-M	0.845	21.46	0.055	1.40	4.000	101.60	1.113	28.28	0.634	16.11	8.57	38.13	2.97	0.52	**C0845-055-4000-S**	1.223	31.06	6.87	30.56	2.47	0.43
C0845-067-0750-M	0.845	21.46	0.067	1.70	0.750	19.05	0.315	8.00	0.250	6.36	14.85	66.07	34.15	5.98	**C0845-067-0750-S**	0.332	8.44	11.88	52.86	28.45	4.98
C0845-067-0875-M	0.845	21.46	0.067	1.70	0.875	22.23	0.357	9.06	0.279	7.08	14.72	65.48	28.41	4.97	**C0845-067-0875-S**	0.373	9.47	11.88	52.86	23.67	4.14
C0845-067-1000-M	0.845	21.46	0.067	1.70	1.000	25.40	0.399	10.13	0.307	7.80	14.63	65.06	24.32	4.26	**C0845-067-1000-S**	0.413	10.50	11.88	52.86	20.26	3.55
C0845-067-1250-M	0.845	21.46	0.067	1.70	1.250	31.75	0.482	12.25	0.364	9.25	14.50	64.48	18.88	3.30	**C0845-067-1250-S**	0.494	12.56	11.88	52.86	15.73	2.75
C0845-067-1500-M	0.845	21.46	0.067	1.70	1.500	38.10	0.566	14.39	0.422	10.71	14.38	63.96	15.40	2.70	**C0845-067-1500-S**	0.574	14.57	11.88	52.86	12.83	2.24
C0845-067-2000-M	0.845	21.46	0.067	1.70	2.000	50.80	0.725	18.42	0.525	13.34	14.36	63.86	11.26	1.97	**C0845-067-2000-S**	0.733	18.62	11.88	52.86	9.38	1.64
C0845-067-2500-M	0.845	21.46	0.067	1.70	2.500	63.50	0.883	22.43	0.627	15.94	14.38	63.95	8.89	1.56	**C0845-067-2500-S**	0.895	22.74	11.88	52.86	7.41	1.30
C0845-067-3000-M	0.845	21.46	0.067	1.70	3.000	76.20	1.041	26.45	0.730	18.55	14.38	63.96	7.34	1.28	**C0845-067-3000-S**	1.056	26.83	11.88	52.86	6.11	1.07
C0845-067-3500-M	0.845	21.46	0.067	1.70	3.500	88.90	1.199	30.46	0.833	21.16	14.38	63.96	6.25	1.09	**C0845-067-3500-S**	1.218	30.92	11.88	52.86	5.21	0.91
C0845-067-4000-M	0.845	21.46	0.067	1.70	4.000	101.60	1.357	34.46	0.935	23.74	14.41	64.08	5.45	0.95	**C0845-067-4000-S**	1.382	35.11	11.88	52.86	4.54	0.79
C0845-072-0750-M	0.845	21.46	0.072	1.83	0.750	19.05	0.348	8.83	0.291	7.38	16.33	72.64	40.60	7.11	**C0845-072-0750-S**	0.348	8.83	13.60	60.51	33.82	5.92
C0845-072-0875-M	0.845	21.46	0.072	1.83	0.875	22.23	0.389	9.89	0.319	8.10	16.95	75.41	34.91	6.11	**C0845-072-0875-S**	0.389	9.89	14.12	62.82	29.08	5.09
C0845-072-1000-M	0.845	21.46	0.072	1.83	1.000	25.40	0.457	11.61	0.379	9.63	14.58	64.85	26.85	4.70	**C0845-072-1000-S**	0.457	11.61	12.14	54.02	22.37	3.91
C0845-072-1250-M	0.845	21.46	0.072	1.83	1.250	31.75	0.543	13.80	0.440	11.17	15.42	68.59	21.82	3.82	**C0845-072-1250-S**	0.543	13.80	12.84	57.13	18.18	3.18
C0845-072-1500-M	0.845	21.46	0.072	1.83	1.500	38.10	0.626	15.90	0.495	12.58	16.05	71.41	18.37	3.21	**C0845-072-1500-S**	0.626	15.90	13.37	59.49	15.30	2.68
C0845-072-2000-M	0.845	21.46	0.072	1.83	2.000	50.80	0.803	20.40	0.546	13.87	19.17	85.28	16.02	2.80	**C0845-072-2000-S**	0.914	23.22	14.49	64.45	13.35	2.34
C0845-072-2500-M	0.845	21.46	0.072	1.83	2.500	63.50	0.964	24.48	0.658	16.71	19.17	85.28	12.48	2.18	**C0845-072-2500-S**	1.106	28.10	14.49	64.45	10.40	1.82
C0845-072-3000-M	0.845	21.46	0.072	1.83	3.000	76.20	1.155	29.33	0.760	19.30	19.17	85.28	10.39	1.82	**C0845-072-3000-S**	1.326	33.68	14.49	64.45	8.66	1.51
C0845-072-3500-M	0.845	21.46	0.072	1.83	3.500	88.90	1.331	33.81	0.866	22.01	19.17	85.28	8.84	1.55	**C0845-072-3500-S**	1.532	38.92	14.49	64.45	7.36	1.29
C0845-075-0880-M	0.845	21.46	0.075	1.91	0.880	22.35	0.407	10.34	0.340	8.63	18.96	84.34	40.10	7.02	**C0845-075-0880-S**	0.407	10.34	15.79	70.26	33.40	5.85
C0845-075-1000-M	0.845	21.46	0.075	1.91	1.000	25.40	0.454	11.53	0.376	9.54	18.80	83.63	34.44	6.03	**C0845-075-1000-S**	0.454	11.53	15.66	69.67	28.69	5.02
C0845-075-1250-M	0.845	21.46	0.075	1.91	1.250	31.75	0.552	14.02	0.450	11.43	18.58	82.64	26.61	4.66	**C0845-075-1250-S**	0.552	14.02	15.47	68.84	22.17	3.88
C0845-075-1500-M	0.845	21.46	0.075	1.91	1.500	38.10	0.645	16.39	0.519	13.19	18.53	82.41	21.68	3.79	**C0845-075-1500-S**	0.645	16.39	15.43	68.65	18.06	3.16
C0845-075-1750-M	0.845	21.46	0.075	1.91	1.750	44.45	0.737	18.72	0.586	14.89	18.54	82.46	18.30	3.20	**C0845-075-1750-S**	0.737	18.72	15.44	68.69	15.24	2.67
C0845-075-2000-M	0.845	21.46	0.075	1.91	2.000	50.80	0.829	21.06	0.653	16.60	18.53	82.41	15.82	2.77	**C0845-075-2000-S**	0.829	21.06	15.43	68.64	13.18	2.31
C0845-075-2250-M	0.845	21.46	0.075	1.91	2.250	57.15	0.921	23.38	0.720	18.30	18.53	82.43	13.94	2.44	**C0845-075-2250-S**	0.921	23.38	15.44	68.67	11.61	2.03
C0845-075-2500-M	0.845	21.46	0.075	1.91	2.500	63.50	1.012	25.71	0.787	19.99	18.54	82.46	12.46	2.18	**C0845-075-2500-S**	1.012	25.71	15.44	68.69	10.38	1.82
C0845-075-2750-M	0.845	21.46	0.075	1.91	2.750	69.85	1.104	28.04	0.854	21.70	18.53	82.44	11.26	1.97	**C0845-075-2750-S**	1.104	28.04	15.44	68.67	9.38	1.64
C0845-075-3000-M	0.845	21.46	0.075	1.91	3.000	76.20	1.196	30.38	0.921	23.40	18.53	82.42	10.27	1.80	**C0845-075-3000-S**	1.196	30.38	15.43	68.65	8.56	1.50
C0845-075-3500-M	0.845	21.46	0.075	1.91	3.500	88.90	1.379	35.03	1.055	26.80	18.54	82.45	8.74	1.53	**C0845-075-3500-S**	1.379	35.03	15.44	68.68	7.28	1.27
C0845-080-0750-M	0.845	21.46	0.080	2.03	0.750	19.05	0.370	9.41	0.312	7.92	25.70	114.31	67.70	11.85	**C0845-080-0750-S**	0.407	10.34	19.34	86.03	56.39	9.87

FOR INFORMATION ON ALTERNATIVE FINISHES, SEE PAGE 311

Part Numbers with an "*" are squared and not ground. **Part Numbers in bold** represent the newly expanded Associated Spring RAYMOND compression spring offering.

(OD) 0.845 - 0.850

MUSIC WIRE															STAINLESS STEEL						
Catalog #	Outside Diameter (OD)		Wire Diameter (d)		Free Length (L) Approx		Load Length (L_1)		Solid Height (Sh) Approx		Load (P) at L_1		Spring Rate (R)		Catalog #	Load Length (L_1)		Load (P) at L_1		Spring Rate (R)	
	in	mm	in	mm	in	mm	in	mm	in	mm	lb	N	lb/in	N/mm		in	mm	lb	N	lb/in	N/mm
C0845-080-0875-M	**0.845**	**21.46**	**0.080**	**2.03**	**0.875**	**22.23**	**0.426**	**10.81**	**0.345**	**8.77**	**25.70**	**114.31**	**57.20**	**10.01**	**C0845-080-0875-S**	**0.469**	**11.91**	**19.34**	**86.03**	**47.65**	**8.34**
C0845-080-1000-M	**0.845**	**21.46**	**0.080**	**2.03**	**1.000**	**25.40**	**0.470**	**11.94**	**0.384**	**9.75**	**25.70**	**114.31**	**48.50**	**8.49**	**C0845-080-1000-S**	**0.521**	**13.24**	**19.34**	**86.03**	**40.40**	**7.07**
C0845-080-1250-M	**0.845**	**21.46**	**0.080**	**2.03**	**1.250**	**31.75**	**0.574**	**14.57**	**0.454**	**11.52**	**25.70**	**114.31**	**38.00**	**6.65**	**C0845-080-1250-S**	**0.639**	**16.23**	**19.34**	**86.03**	**31.65**	**5.54**
C0845-080-1375-M	**0.845**	**21.46**	**0.080**	**2.03**	**1.375**	**34.93**	**0.619**	**15.73**	**0.492**	**12.49**	**25.70**	**114.31**	**34.00**	**5.95**	**C0845-080-1375-S**	**0.692**	**17.58**	**19.34**	**86.03**	**28.32**	**4.96**
C0845-080-1500-M	**0.845**	**21.46**	**0.080**	**2.03**	**1.500**	**38.10**	**0.671**	**17.04**	**0.524**	**13.32**	**25.70**	**114.31**	**31.00**	**5.43**	**C0845-080-1500-S**	**0.751**	**19.08**	**19.34**	**86.03**	**25.82**	**4.52**
C0845-080-1750-M	**0.845**	**21.46**	**0.080**	**2.03**	**1.750**	**44.45**	**0.762**	**19.35**	**0.593**	**15.06**	**25.70**	**114.31**	**26.00**	**4.55**	**C0845-080-1750-S**	**0.857**	**21.77**	**19.34**	**86.03**	**21.66**	**3.79**
C0845-080-2000-M	**0.845**	**21.46**	**0.080**	**2.03**	**2.000**	**50.80**	**0.843**	**21.40**	**0.670**	**17.02**	**25.46**	**113.27**	**22.00**	**3.85**	**C0845-080-2000-S**	**0.945**	**23.99**	**19.34**	**86.03**	**18.33**	**3.21**
C0845-080-2250-M	**0.845**	**21.46**	**0.080**	**2.03**	**2.250**	**57.15**	**0.932**	**23.68**	**0.735**	**18.66**	**25.70**	**114.31**	**19.50**	**3.41**	**C0845-080-2250-S**	**1.059**	**26.91**	**19.34**	**86.03**	**16.24**	**2.84**
C0845-080-2500-M	**0.845**	**21.46**	**0.080**	**2.03**	**2.500**	**63.50**	**1.032**	**26.20**	**0.799**	**20.30**	**25.70**	**114.31**	**17.50**	**3.06**	**C0845-080-2500-S**	**1.173**	**29.80**	**19.34**	**86.03**	**14.58**	**2.55**
C0845-080-2750-M	**0.845**	**21.46**	**0.080**	**2.03**	**2.750**	**69.85**	**1.125**	**28.59**	**0.881**	**22.37**	**25.18**	**112.01**	**15.50**	**2.71**	**C0845-080-2750-S**	**1.252**	**31.80**	**19.34**	**86.03**	**12.91**	**2.26**
C0845-080-3000-M	**0.845**	**21.46**	**0.080**	**2.03**	**3.000**	**76.20**	**1.228**	**31.19**	**0.930**	**23.62**	**25.70**	**114.31**	**14.50**	**2.54**	**C0845-080-3000-S**	**1.399**	**35.53**	**19.34**	**86.03**	**12.08**	**2.11**
C0845-080-3500-M	**0.845**	**21.46**	**0.080**	**2.03**	**3.500**	**88.90**	**1.406**	**35.72**	**1.089**	**27.65**	**25.12**	**111.76**	**12.00**	**2.10**	**C0845-080-3500-S**	**1.565**	**39.75**	**19.34**	**86.03**	**10.00**	**1.75**
C0850-068-0750-M	0.850	21.59	0.068	1.73	0.750	19.05	0.445	11.30	0.292	7.42	10.94	48.66	35.90	6.28	C0850-068-0750-S	0.445	11.30	9.11	40.54	29.91	5.23
C0850-068-0875-M	0.850	21.59	0.068	1.73	0.880	22.35	0.513	13.03	0.317	8.05	10.94	48.66	29.80	5.22	C0850-068-0875-S	0.513	13.03	9.11	40.54	24.82	4.34
C0850-068-1000-M	0.850	21.59	0.068	1.73	1.000	25.40	0.571	14.50	0.342	8.69	10.94	48.66	25.50	4.46	C0850-068-1000-S	0.571	14.50	9.11	40.54	21.24	3.72
C0850-068-1250-M	0.850	21.59	0.068	1.73	1.250	31.75	0.696	17.68	0.391	9.93	10.94	48.66	19.80	3.47	C0850-068-1250-S	0.696	17.68	9.11	40.54	16.49	2.89
C0850-068-1500-M	0.850	21.59	0.068	1.73	1.500	38.10	0.822	20.88	0.441	11.20	10.94	48.66	16.10	2.82	C0850-068-1500-S	0.822	20.88	9.11	40.54	13.41	2.35
C0850-068-1750-M	0.850	21.59	0.068	1.73	1.750	44.45	0.948	24.08	0.490	12.45	10.94	48.66	13.60	2.38	C0850-068-1750-S	0.948	24.08	9.11	40.54	11.33	1.98
C0850-068-2000-M	0.850	21.59	0.068	1.73	2.000	50.80	1.074	27.28	0.540	13.72	10.94	48.66	11.80	2.07	C0850-068-2000-S	1.074	27.28	9.11	40.54	9.83	1.72
C0850-068-2250-M	0.850	21.59	0.068	1.73	2.250	57.15	1.200	30.48	0.590	14.99	10.94	48.66	10.40	1.82	C0850-068-2250-S	1.200	30.48	9.11	40.54	8.66	1.52
C0850-068-2500-M	0.850	21.59	0.068	1.73	2.500	63.50	1.325	33.66	0.639	16.23	10.94	48.66	9.30	1.63	C0850-068-2500-S	1.325	33.66	9.11	40.54	7.75	1.36
C0850-068-3000-M	0.850	21.59	0.068	1.73	3.000	76.20	1.577	40.06	0.739	18.77	10.94	48.66	7.70	1.35	C0850-068-3000-S	1.577	40.06	9.11	40.54	6.41	1.12
C0850-068-3500-M	0.850	21.59	0.068	1.73	3.500	88.90	1.828	46.43	0.838	21.29	10.94	48.66	6.50	1.14	C0850-068-3500-S	1.828	46.43	9.11	40.54	5.42	0.95
C0850-068-4000-M	0.850	21.59	0.068	1.73	4.000	101.60	2.080	52.83	0.937	23.80	10.94	48.66	5.70	1.00	C0850-068-4000-S	2.080	52.83	9.11	40.54	4.75	0.83
C0850-074-0875-M	0.850	21.59	0.074	1.88	0.880	22.35	0.534	13.56	0.355	9.02	13.86	61.65	40.10	7.02	C0850-074-0875-S	0.534	13.56	11.55	51.36	33.40	5.85
C0850-074-1000-M	0.850	21.59	0.074	1.88	1.000	25.40	0.595	15.11	0.384	9.75	13.86	61.65	34.20	5.99	C0850-074-1000-S	0.595	15.11	11.55	51.36	28.49	4.99
C0850-074-1250-M	0.850	21.59	0.074	1.88	1.250	31.75	0.727	18.47	0.443	11.25	13.86	61.65	26.50	4.64	C0850-074-1250-S	0.727	18.47	11.55	51.36	22.08	3.86
C0850-074-1500-M	0.850	21.59	0.074	1.88	1.500	38.10	0.858	21.79	0.501	12.73	13.86	61.65	21.60	3.78	C0850-074-1500-S	0.858	21.79	11.55	51.36	17.99	3.15
C0850-074-2000-M	0.850	21.59	0.074	1.88	2.000	50.80	1.120	28.45	0.618	15.70	13.86	61.65	15.80	2.77	C0850-074-2000-S	1.120	28.45	11.55	51.36	13.16	2.30
C0850-074-2500-M	0.850	21.59	0.074	1.88	2.500	63.50	1.383	35.13	0.735	18.67	13.86	61.65	12.40	2.17	C0850-074-2500-S	1.383	35.13	11.55	51.36	10.33	1.81
C0850-074-3000-M	0.850	21.59	0.074	1.88	3.000	76.20	1.645	41.78	0.852	21.64	13.86	61.65	10.20	1.79	C0850-074-3000-S	1.645	41.78	11.55	51.36	8.50	1.49
C0850-074-3500-M	0.850	21.59	0.074	1.88	3.500	88.90	1.908	48.46	0.969	24.61	13.86	61.65	8.70	1.52	C0850-074-3500-S	1.908	48.46	11.55	51.36	7.25	1.27
C0850-081-0750-M	0.850	21.59	0.081	2.06	0.750	19.05	0.486	12.34	0.365	9.27	17.83	79.31	67.70	11.85	C0850-081-0750-S	0.486	12.34	14.85	66.07	56.39	9.87
C0850-081-0875-M	0.850	21.59	0.081	2.06	0.880	22.35	0.560	14.22	0.400	10.16	17.83	79.31	55.80	9.77	C0850-081-0875-S	0.560	14.22	14.85	66.07	46.48	8.13
C0850-081-1000-M	0.850	21.59	0.081	2.06	1.000	25.40	0.624	15.85	0.435	11.05	17.83	79.31	47.50	8.31	C0850-081-1000-S	0.624	15.85	14.85	66.07	39.57	6.92
C0850-081-1250-M	0.850	21.59	0.081	2.06	1.250	31.75	0.762	19.35	0.504	12.80	17.83	79.31	36.60	6.41	C0850-081-1250-S	0.762	19.35	14.85	66.07	30.49	5.34
C0850-081-1500-M	0.850	21.59	0.081	2.06	1.500	38.10	0.900	22.86	0.573	14.55	17.83	79.31	29.70	5.20	C0850-081-1500-S	0.900	22.86	14.85	66.07	24.74	4.33
C0850-081-1750-M	0.850	21.59	0.081	2.06	1.750	44.45	1.038	26.37	0.642	16.31	17.83	79.31	25.10	4.39	C0850-081-1750-S	1.038	26.37	14.85	66.07	20.91	3.66
C0850-081-2000-M	0.850	21.59	0.081	2.06	2.000	50.80	1.176	29.87	0.712	18.08	17.83	79.31	21.60	3.78	C0850-081-2000-S	1.176	29.87	14.85	66.07	17.99	3.15
C0850-081-2250-M	0.850	21.59	0.081	2.06	2.250	57.15	1.314	33.38	0.781	19.84	17.83	79.31	19.10	3.34	C0850-081-2250-S	1.314	33.38	14.85	66.07	15.91	2.78
C0850-081-2500-M	0.850	21.59	0.081	2.06	2.500	63.50	1.452	36.88	0.850	21.59	17.83	79.31	17.00	2.98	C0850-081-2500-S	1.452	36.88	14.85	66.07	14.16	2.48
C0850-081-2750-M	0.850	21.59	0.081	2.06	2.750	69.85	1.590	40.39	0.920	23.37	17.83	79.31	15.40	2.70	C0850-081-2750-S	1.590	40.39	14.85	66.07	12.83	2.24
C0850-081-3000-M	0.850	21.59	0.081	2.06	3.000	76.20	1.728	43.89	0.989	25.12	17.83	79.31	14.00	2.45	C0850-081-3000-S	1.728	43.89	14.85	66.07	11.66	2.04
C0850-081-3500-M	0.850	21.59	0.081	2.06	3.500	88.90	2.004	50.90	1.127	28.63	17.83	79.31	11.90	2.08	C0850-081-3500-S	2.004	50.90	14.85	66.07	9.91	1.73
C0850-085-0750-M	0.850	21.59	0.085	2.16	0.750	19.05	0.499	12.67	0.388	9.86	20.39	90.70	81.30	14.23	C0850-085-0750-S	0.499	12.67	16.98	75.55	67.72	11.85
C0850-085-0875-M	0.850	21.59	0.085	2.16	0.880	22.35	0.575	14.61	0.426	10.82	20.39	90.70	66.90	11.71	C0850-085-0875-S	0.575	14.61	16.98	75.55	55.73	9.75
C0850-085-1000-M	0.850	21.59	0.085	2.16	1.000	25.40	0.641	16.28	0.463	11.76	20.39	90.70	56.80	9.94	C0850-085-1000-S	0.641	16.28	16.98	75.55	47.31	8.28
C0850-085-1250-M	0.850	21.59	0.085	2.16	1.250	31.75	0.783	19.89	0.539	13.69	20.39	90.70	43.60	7.63	C0850-085-1250-S	0.783	19.89	16.98	75.55	36.32	6.36
C0850-085-1500-M	0.850	21.59	0.085	2.16	1.500	38.10	0.925	23.50	0.615	15.62	20.39	90.70	35.40	6.20	C0850-085-1500-S	0.925	23.50	16.98	75.55	29.49	5.16
C0850-085-1750-M	0.850	21.59	0.085	2.16	1.750	44.45	1.067	27.10	0.690	17.53	20.39	90.70	29.80	5.22	C0850-085-1750-S	1.067	27.10	16.98	75.55	24.82	4.34
C0850-085-2000-M	0.850	21.59	0.085	2.16	2.000	50.80	1.208	30.68	0.766	19.46	20.39	90.70	25.80	4.52	C0850-085-2000-S	1.208	30.68	16.98	75.55	21.49	3.76
C0850-085-2250-M	0.850	21.59	0.085	2.16	2.250	57.15	1.350	34.29	0.841	21.36	20.39	90.70	22.70	3.97	C0850-085-2250-S	1.350	34.29	16.98	75.55	18.91	3.31
C0850-085-2500-M	0.850	21.59	0.085	2.16	2.500	63.50	1.492	37.90	0.917	23.29	20.39	90.70	20.20	3.54	C0850-085-2500-S	1.492	37.90	16.98	75.55	16.83	2.94
C0850-085-2750-M	0.850	21.59	0.085	2.16	2.750	69.85	1.634	41.50	0.992	25.20	20.39	90.70	18.30	3.20	C0850-085-2750-S	1.634	41.50	16.98	75.55	15.24	2.67
C0850-085-3000-M	0.850	21.59	0.085	2.16	3.000	76.20	1.776	45.11	1.068	27.13	20.39	90.70	16.70	2.92	C0850-085-3000-S	1.776	45.11	16.98	75.55	13.91	2.43
C0850-085-3250-M	0.850	21.59	0.085	2.16	3.250	82.55	1.918	48.72	1.144	29.06	20.39	90.70	15.30	2.68	C0850-085-3250-S	1.918	48.72	16.98	75.55	12.75	2.23
C0850-085-3500-M	0.850	21.59	0.085	2.16	3.500	88.90	2.059	52.30	1.219	30.96	20.39	90.70	14.20	2.49	C0850-085-3500-S	2.059	52.30	16.98	75.55	11.83	2.07
C0850-085-4000-M	0.850	21.59	0.085	2.16	4.000	101.60	2.343	59.51	1.370	34.80	20.39	90.70	12.30	2.15	C0850-085-4000-S	2.343	59.51	16.98	75.55	10.25	1.79
C0850-092-0880-M	0.850	21.59	0.092	2.34	0.880	22.35	0.598	15.19	0.471	11.96	25.39	112.94	90.10	15.77	C0850-092-0880-S	0.598	15.19	21.15	94.08	75.05	13.13
C0850-092-1000-M	0.850	21.59	0.092	2.34	1.000	25.40	0.670	17.02	0.513	13.03	25.39	112.94	76.90	13.46	C0850-092-1000-S	0.670	17.02	21.15	94.08	64.06	11.21
C0850-092-1250-M	0.850	21.59	0.092	2.34	1.250	31.75	0.818	20.78	0.600	15.24	25.39	112.94	58.80	10.29	C0850-092-1250-S	0.818	20.78	21.15	94.08	48.98	8.57
C0850-092-1500-M	0.850	21.59	0.092	2.34	1.500	38.10	0.967	24.56	0.686	17.42	25.39	112.94	47.70	8.35	C0850-092-1500-S	0.967	24.56	21.15	94.08	39.73	6.95
C0850-092-1750-M	0.850	21.59	0.092	2.34	1.750	44.45	1.116	28.35	0.773	19.63	25.39	112.94	40.00	7.00	C0850-092-1750-S	1.116	28.35	21.15	94.08	33.32	5.83
C0850-092-2000-M	0.850	21.59	0.092	2.34	2.000	50.80	1.265	32.13	0.860	21.84	25.39	112.94	34.50	6.04	C0850-092-2000-S	1.265	32.13	21.15	94.08	28.74	5.03

Part Numbers with an "*" are squared and not ground. **Part Numbers in bold** represent the newly expanded Associated Spring RAYMOND compression spring offering.

MUSIC WIRE															STAINLESS STEEL						
Catalog #	Outside Diameter (OD)		Wire Diameter (d)		Free Length (L) Approx		Load Length (L_1)		Solid Height (Sh) Approx		Load (P) at L_1		Spring Rate (R)		Catalog #	Load Length (L_1)		Load (P) at L_1		Spring Rate (R)	
	in	mm	in	mm	in	mm	in	mm	in	mm	lb	N	lb/in	N/mm		in	mm	lb	N	lb/in	N/mm
C0850-092-2250-M	0.850	21.59	0.092	2.34	2.250	57.15	1.413	35.89	0.947	24.05	25.39	112.94	30.40	5.32	C0850-092-2250-S	1.413	35.89	21.15	94.08	25.32	4.43
C0850-092-2500-M	0.850	21.59	0.092	2.34	2.500	63.50	1.562	39.67	1.033	26.24	25.39	112.94	27.10	4.74	C0850-092-2500-S	1.562	39.67	21.15	94.08	22.57	3.95
C0850-092-2750-M	0.850	21.59	0.092	2.34	2.750	69.85	1.711	43.46	1.120	28.45	25.39	112.94	24.40	4.27	C0850-092-2750-S	1.711	43.46	21.15	94.08	20.33	3.56
C0850-092-3000-M	0.850	21.59	0.092	2.34	3.000	76.20	1.860	47.24	1.207	30.66	25.39	112.94	22.30	3.90	C0850-092-3000-S	1.860	47.24	21.15	94.08	18.58	3.25
C0850-092-3500-M	0.850	21.59	0.092	2.34	3.500	88.90	2.157	54.79	1.380	35.05	25.39	112.94	18.90	3.31	C0850-092-3500-S	2.157	54.79	21.15	94.08	15.74	2.76
C0850-098-1000-M	0.850	21.59	0.098	2.49	1.000	25.40	0.694	17.63	0.555	14.10	30.24	134.51	98.70	17.27	C0850-098-1000-S	0.694	17.63	25.19	112.05	82.22	14.39
C0850-098-1250-M	0.850	21.59	0.098	2.49	1.250	31.75	0.848	21.54	0.651	16.54	30.24	134.51	75.30	13.18	C0850-098-1250-S	0.848	21.54	25.19	112.05	62.73	10.98
C0850-098-1500-M	0.850	21.59	0.098	2.49	1.500	38.10	1.003	25.48	0.747	18.97	30.24	134.51	60.80	10.64	C0850-098-1500-S	1.003	25.48	25.19	112.05	50.65	8.86
C0850-098-1750-M	0.850	21.59	0.098	2.49	1.750	44.45	1.158	29.41	0.843	21.41	30.24	134.51	51.10	8.94	C0850-098-1750-S	1.158	29.41	25.19	112.05	42.57	7.45
C0850-098-2000-M	0.850	21.59	0.098	2.49	2.000	50.80	1.312	33.32	0.940	23.88	30.24	134.51	44.00	7.70	C0850-098-2000-S	1.312	33.32	25.19	112.05	36.65	6.41
C0850-098-2250-M	0.850	21.59	0.098	2.49	2.250	57.15	1.467	37.26	1.036	26.31	30.24	134.51	38.60	6.76	C0850-098-2250-S	1.467	37.26	25.19	112.05	32.15	5.63
C0850-098-2500-M	0.850	21.59	0.098	2.49	2.500	63.50	1.622	41.20	1.132	28.75	30.24	134.51	34.40	6.02	C0850-098-2500-S	1.622	41.20	25.19	112.05	28.66	5.01
C0850-098-2750-M	0.850	21.59	0.098	2.49	2.750	69.85	1.776	45.11	1.229	31.22	30.24	134.51	31.10	5.44	C0850-098-2750-S	1.776	45.11	25.19	112.05	25.91	4.53
C0850-098-3000-M	0.850	21.59	0.098	2.49	3.000	76.20	1.931	49.05	1.325	33.66	30.24	134.51	28.30	4.95	C0850-098-3000-S	1.931	49.05	25.19	112.05	23.57	4.13
C0850-098-3500-M	0.850	21.59	0.098	2.49	3.500	88.90	2.240	56.90	1.517	38.53	30.24	134.51	24.00	4.20	C0850-098-3500-S	2.240	56.90	25.19	112.05	19.99	3.50
D12550	0.850	21.60	0.063	1.60	1.890	48.00	0.488	12.40	0.346	8.80	19.07	84.83	13.60	2.38	D22550	0.488	12.40	15.89	70.66	11.31	1.98
D12560	0.850	21.60	0.063	1.60	2.894	73.50	0.693	17.60	0.472	12.00	19.07	84.83	8.69	1.52	D22560	0.693	17.60	15.89	70.66	7.26	1.27
D12570	0.850	21.60	0.063	1.60	4.331	110.00	1.004	25.50	0.661	16.80	19.07	84.83	5.66	0.99	D22570	1.004	25.50	15.89	70.66	4.69	0.82
D12580	0.850	21.60	0.063	1.60	6.496	165.00	1.417	36.00	0.913	23.20	19.07	84.83	3.83	0.67	D22580	1.417	36.00	15.89	70.66	3.20	0.56
D12590	0.850	21.60	0.063	1.60	9.449	240.00	2.039	51.80	1.291	32.80	19.07	84.83	2.57	0.45	D22590	2.039	51.80	15.89	70.66	2.11	0.37
D12750	0.866	22.00	0.079	2.00	1.614	41.00	0.535	13.60	0.433	11.00	35.72	158.87	33.31	5.83	D22750	0.535	13.60	29.75	132.34	27.77	4.86
D12760	0.866	22.00	0.079	2.00	2.441	62.00	0.756	19.20	0.591	15.00	35.72	158.87	21.20	3.71	D22760	0.756	19.20	29.75	132.34	17.66	3.09
D12770	0.866	22.00	0.079	2.00	3.701	94.00	1.087	27.60	0.827	21.00	35.72	158.87	13.66	2.39	D22770	1.087	27.60	29.75	132.34	11.37	1.99
D12780	0.866	22.00	0.079	2.00	5.315	135.00	1.528	38.80	1.142	29.00	35.72	158.87	9.31	1.63	D22780	1.528	38.80	29.75	132.34	7.77	1.36
D12790	0.866	22.00	0.079	2.00	7.874	200.00	2.189	55.60	1.614	41.00	35.72	158.87	6.29	1.10	D22790	2.189	55.60	29.75	132.34	5.26	0.92
C0875-092-0875-M	**0.875**	**22.23**	**0.092**	**2.34**	**0.875**	**22.23**	**0.471**	**11.97**	**0.420**	**10.66**	**34.49**	**153.44**	**85.41**	**14.95**	**C0875-092-0875-S**	**0.490**	**12.45**	**27.37**	**121.75**	**71.15**	**12.45**
C0875-092-1000-M	**0.875**	**22.23**	**0.092**	**2.34**	**1.000**	**25.40**	**0.529**	**13.45**	**0.469**	**11.90**	**34.04**	**151.43**	**72.33**	**12.66**	**C0875-092-1000-S**	**0.546**	**13.86**	**27.37**	**121.75**	**60.25**	**10.54**
C0875-092-1500-M	**0.875**	**22.23**	**0.092**	**2.34**	**1.500**	**38.10**	**0.755**	**19.19**	**0.655**	**16.64**	**33.39**	**148.54**	**44.85**	**7.85**	**C0875-092-1500-S**	**0.767**	**19.49**	**27.37**	**121.75**	**37.36**	**6.54**
C0875-092-1750-M	**0.875**	**22.23**	**0.092**	**2.34**	**1.750**	**44.45**	**0.864**	**21.95**	**0.743**	**18.87**	**33.39**	**148.54**	**37.69**	**6.60**	**C0875-092-1750-S**	**0.878**	**22.31**	**27.37**	**121.75**	**31.40**	**5.49**
C0875-092-2000-M	**0.875**	**22.23**	**0.092**	**2.34**	**2.000**	**50.80**	**0.973**	**24.70**	**0.831**	**21.10**	**33.39**	**148.53**	**32.50**	**5.69**	**C0875-092-2000-S**	**0.989**	**25.12**	**27.37**	**121.75**	**27.07**	**4.74**
C0875-092-2500-M	**0.875**	**22.23**	**0.092**	**2.34**	**2.500**	**63.50**	**1.190**	**30.22**	**1.007**	**25.57**	**33.38**	**148.50**	**25.48**	**4.46**	**C0875-092-2500-S**	**1.210**	**30.75**	**27.37**	**121.75**	**21.23**	**3.71**
C0875-092-2750-M	**0.875**	**22.23**	**0.092**	**2.34**	**2.750**	**69.85**	**1.298**	**32.98**	**1.094**	**27.79**	**33.39**	**148.52**	**23.00**	**4.03**	**C0875-092-2750-S**	**1.321**	**33.56**	**27.37**	**121.75**	**19.16**	**3.35**
C0875-092-3063-M	**0.875**	**22.23**	**0.092**	**2.34**	**3.063**	**77.80**	**1.434**	**36.43**	**1.204**	**30.58**	**33.39**	**148.53**	**20.50**	**3.59**	**C0875-092-3063-S**	**1.460**	**37.09**	**27.37**	**121.75**	**17.08**	**2.99**
C0875-092-3500-M	**0.875**	**22.23**	**0.092**	**2.34**	**3.500**	**88.90**	**1.624**	**41.25**	**1.357**	**34.48**	**33.40**	**148.55**	**17.80**	**3.12**	**C0875-092-3500-S**	**1.654**	**42.01**	**27.37**	**121.75**	**14.83**	**2.59**
C0875-092-4000-M	**0.875**	**22.23**	**0.092**	**2.34**	**4.000**	**101.60**	**1.841**	**46.76**	**1.533**	**38.93**	**33.40**	**148.58**	**15.47**	**2.71**	**C0875-092-4000-S**	**1.876**	**47.65**	**27.37**	**121.75**	**12.89**	**2.26**
C0875-120-1500-M	**0.875**	**22.23**	**0.120**	**3.05**	**1.500**	**38.10**	**0.995**	**25.27**	**0.831**	**21.12**	**76.11**	**338.54**	**150.62**	**26.36**	**C0875-120-1500-S**	**1.055**	**26.81**	**55.78**	**248.13**	**125.47**	**21.96**
C0875-120-2000-M	**0.875**	**22.23**	**0.120**	**3.05**	**2.000**	**50.80**	**1.294**	**32.87**	**1.061**	**26.96**	**76.11**	**338.54**	**107.83**	**18.87**	**C0875-120-2000-S**	**1.379**	**35.03**	**55.78**	**248.13**	**89.82**	**15.72**
C0875-120-2250-M	**0.875**	**22.23**	**0.120**	**3.05**	**2.250**	**57.15**	**1.444**	**36.68**	**1.176**	**29.88**	**76.11**	**338.54**	**94.42**	**16.52**	**C0875-120-2250-S**	**1.541**	**39.14**	**55.78**	**248.13**	**78.65**	**13.76**
C0875-120-2500-M	**0.875**	**22.23**	**0.120**	**3.05**	**2.500**	**63.50**	**1.594**	**40.48**	**1.291**	**32.80**	**76.11**	**338.54**	**83.97**	**14.69**	**C0875-120-2500-S**	**1.703**	**43.24**	**55.78**	**248.13**	**69.95**	**12.24**
C0875-120-3000-M	**0.875**	**22.23**	**0.120**	**3.05**	**3.000**	**76.20**	**1.893**	**48.09**	**1.521**	**38.64**	**76.11**	**338.54**	**68.76**	**12.03**	**C0875-120-3000-S**	**2.026**	**51.46**	**55.78**	**248.13**	**57.28**	**10.02**
C0875-120-3500-M	**0.875**	**22.23**	**0.120**	**3.05**	**3.500**	**88.90**	**2.193**	**55.69**	**1.751**	**44.48**	**76.11**	**338.54**	**58.21**	**10.19**	**C0875-120-3500-S**	**2.350**	**59.68**	**55.78**	**248.13**	**48.49**	**8.49**
C0875-120-4000-M	**0.875**	**22.23**	**0.120**	**3.05**	**4.000**	**101.60**	**2.492**	**63.30**	**1.981**	**50.32**	**76.11**	**338.54**	**50.47**	**8.83**	**C0875-120-4000-S**	**2.673**	**67.90**	**55.78**	**248.13**	**42.04**	**7.36**
C0875-120-4500-M	**0.875**	**22.23**	**0.120**	**3.05**	**4.500**	**114.30**	**2.792**	**70.91**	**2.211**	**56.16**	**76.11**	**338.54**	**44.55**	**7.80**	**C0875-120-4500-S**	**2.997**	**76.12**	**55.78**	**248.13**	**37.11**	**6.49**
C0875-120-5000-M	**0.875**	**22.23**	**0.120**	**3.05**	**5.000**	**127.00**	**3.091**	**78.51**	**2.441**	**62.00**	**76.11**	**338.54**	**39.87**	**6.98**	**C0875-120-5000-S**	**3.320**	**84.34**	**55.78**	**248.13**	**33.21**	**5.81**
C0875-120-5500-M	**0.875**	**22.23**	**0.120**	**3.05**	**5.500**	**139.70**	**3.391**	**86.12**	**2.671**	**67.84**	**76.11**	**338.54**	**36.08**	**6.31**	**C0875-120-5500-S**	**3.644**	**92.56**	**55.78**	**248.13**	**30.06**	**5.26**
C0875-148-2500-M	**0.875**	**22.23**	**0.148**	**3.76**	**2.500**	**63.50**	**1.825**	**46.36**	**1.709**	**43.42**	**134.55**	**598.52**	**199.44**	**34.90**	**C0875-148-2500-S**	**1.919**	**48.74**	**96.56**	**429.53**	**166.13**	**29.07**
C0881-068-1750-M	**0.881**	**22.38**	**0.068**	**1.73**	**1.750**	**44.45**	**0.626**	**15.89**	**0.449**	**11.39**	**15.02**	**66.81**	**13.36**	**2.34**	**C0881-068-1750-S**	**0.726**	**18.44**	**11.89**	**52.90**	**11.62**	**2.03**
C0881-068-1875-M	**0.881**	**22.38**	**0.068**	**1.73**	**1.875**	**47.63**	**0.664**	**16.85**	**0.472**	**11.99**	**15.02**	**66.81**	**12.40**	**2.17**	**C0881-068-1875-S**	**0.772**	**19.60**	**11.89**	**52.90**	**10.78**	**1.89**
C0881-068-2000-M	**0.881**	**22.38**	**0.068**	**1.73**	**2.000**	**50.80**	**0.701**	**17.82**	**0.496**	**12.60**	**15.02**	**66.81**	**11.57**	**2.02**	**C0881-068-2000-S**	**0.818**	**20.77**	**11.89**	**52.90**	**10.06**	**1.76**
C0881-068-2125-M	**0.881**	**22.38**	**0.068**	**1.73**	**2.125**	**53.98**	**0.739**	**18.78**	**0.520**	**13.20**	**15.02**	**66.81**	**10.84**	**1.90**	**C0881-068-2125-S**	**0.863**	**21.93**	**11.89**	**52.90**	**9.43**	**1.65**
C0881-068-2250-M	**0.881**	**22.38**	**0.068**	**1.73**	**2.250**	**57.15**	**0.777**	**19.74**	**0.543**	**13.80**	**15.02**	**66.81**	**10.20**	**1.78**	**C0881-068-2250-S**	**0.909**	**23.09**	**11.89**	**52.90**	**8.87**	**1.55**
C0881-068-2375-M	**0.881**	**22.38**	**0.068**	**1.73**	**2.375**	**60.33**	**0.815**	**20.71**	**0.567**	**14.40**	**15.02**	**66.81**	**9.63**	**1.69**	**C0881-068-2375-S**	**0.955**	**24.25**	**11.89**	**52.90**	**8.37**	**1.47**
C0881-068-2500-M	**0.881**	**22.38**	**0.068**	**1.73**	**2.500**	**63.50**	**0.853**	**21.67**	**0.591**	**15.00**	**15.02**	**66.81**	**9.12**	**1.60**	**C0881-068-2500-S**	**1.000**	**25.41**	**11.89**	**52.90**	**7.93**	**1.39**
C0881-068-2625-M	**0.881**	**22.38**	**0.068**	**1.73**	**2.625**	**66.68**	**0.891**	**22.63**	**0.614**	**15.60**	**15.02**	**66.81**	**8.66**	**1.52**	**C0881-068-2625-S**	**1.046**	**26.57**	**11.89**	**52.90**	**7.53**	**1.32**
C0881-068-2750-M	**0.881**	**22.38**	**0.068**	**1.73**	**2.750**	**69.85**	**0.929**	**23.59**	**0.638**	**16.20**	**15.02**	**66.81**	**8.25**	**1.44**	**C0881-068-2750-S**	**1.092**	**27.73**	**11.89**	**52.90**	**7.17**	**1.26**
C0881-068-2875-M	**0.881**	**22.38**	**0.068**	**1.73**	**2.875**	**73.03**	**0.967**	**24.56**	**0.662**	**16.81**	**15.02**	**66.81**	**7.87**	**1.38**	**C0881-068-2875-S**	**1.137**	**28.89**	**11.89**	**52.90**	**6.85**	**1.20**
C0881-068-3000-M	**0.881**	**22.38**	**0.068**	**1.73**	**3.000**	**76.20**	**1.005**	**25.52**	**0.685**	**17.41**	**15.02**	**66.81**	**7.53**	**1.32**	**C0881-068-3000-S**	**1.183**	**30.05**	**11.89**	**52.90**	**6.55**	**1.15**
C0881-068-3250-M	**0.881**	**22.38**	**0.068**	**1.73**	**3.250**	**82.55**	**1.081**	**27.45**	**0.733**	**18.61**	**15.02**	**66.81**	**6.92**	**1.21**	**C0881-068-3250-S**	**1.275**	**32.37**	**11.89**	**52.90**	**6.02**	**1.05**
C0881-068-3500-M	**0.881**	**22.38**	**0.068**	**1.73**	**3.500**	**88.90**	**1.156**	**29.37**	**0.780**	**19.81**	**15.02**	**66.81**	**6.41**	**1.12**	**C0881-068-3500-S**	**1.366**	**34.70**	**11.89**	**52.90**	**5.57**	**0.98**
C0881-068-3750-M	**0.881**	**22.38**	**0.068**	**1.73**	**3.750**	**95.25**	**1.232**	**31.30**	**0.827**	**21.01**	**15.02**	**66.81**	**5.97**	**1.04**	**C0881-068-3750-S**	**1.457**	**37.02**	**11.89**	**52.90**	**5.19**	**0.91**
C0881-068-4000-M	**0.881**	**22.38**	**0.068**	**1.73**	**4.000**	**101.60**	**1.308**	**33.23**	**0.875**	**22.22**	**15.02**	**66.81**	**5.58**	**0.98**	**C0881-068-4000-S**	**1.549**	**39.34**	**11.89**	**52.90**	**4.85**	**0.85**
C0881-068-4250-M	**0.881**	**22.38**	**0.068**	**1.73**	**4.250**	**107.95**	**1.384**	**35.15**	**0.922**	**23.42**	**15.02**	**66.81**	**5.24**	**0.92**	**C0881-068-4250-S**	**1.640**	**41.66**	**11.89**	**52.90**	**4.56**	**0.80**
C0881-068-4500-M	**0.881**	**22.38**	**0.068**	**1.73**	**4.500**	**114.30**	**1.460**	**37.08**	**0.969**	**24.62**	**15.02**	**66.81**	**4.94**	**0.86**	**C0881-068-4500-S**	**1.732**	**43.98**	**11.89**	**52.90**	**4.30**	**0.75**
C0881-068-4750-M	**0.881**	**22.38**	**0.068**	**1.73**	**4.750**	**120.65**	**1.536**	**39.00**	**1.017**	**25.83**	**15.02**	**66.81**	**4.67**	**0.82**	**C0881-068-4750-S**	**1.823**	**46.31**	**11.89**	**52.90**	**4.06**	**0.71**

FOR INFORMATION ON ALTERNATIVE FINISHES, SEE PAGE 311

Part Numbers with an "*" are squared and not ground. **Part Numbers in bold** represent the newly expanded Associated Spring RAYMOND compression spring offering.

(OD) 0.881 - 0.881

MUSIC WIRE															STAINLESS STEEL						
Catalog #	Outside Diameter (OD)		Wire Diameter (d)		Free Length (L) Approx		Load Length (L_1)		Solid Height (Sh) Approx		Load (P) at L_1		Spring Rate (R)		Catalog #	Load Length (L_1)		Load (P) at L_1		Spring Rate (R)	
	in	mm	in	mm	in	mm	in	mm	in	mm	lb	N	lb/in	N/mm		in	mm	lb	N	lb/in	N/mm
C0881-068-5000-M	0.881	22.38	0.068	1.73	5.000	127.00	1.611	40.93	1.064	27.03	15.02	66.81	4.43	0.78	**C0881-068-5000-S**	1.914	48.63	11.89	52.90	3.85	0.67
C0881-068-5250-M	0.881	22.38	0.068	1.73	5.250	133.35	1.687	42.86	1.111	28.23	15.02	66.81	4.22	0.74	**C0881-068-5250-S**	2.006	50.95	11.89	52.90	3.67	0.64
C0881-068-5500-M	0.881	22.38	0.068	1.73	5.500	139.70	1.763	44.78	1.159	29.43	15.02	66.81	4.02	0.70	**C0881-068-5500-S**	2.097	53.27	11.89	52.90	3.50	0.61
C0881-068-5750-M	0.881	22.38	0.068	1.73	5.750	146.05	1.839	46.71	1.206	30.64	15.02	66.81	3.84	0.67	**C0881-068-5750-S**	2.189	55.59	11.89	52.90	3.34	0.58
C0881-068-6000-M	0.881	22.38	0.068	1.73	6.000	152.40	1.915	48.64	1.254	31.84	15.02	66.81	3.68	0.64	**C0881-068-6000-S**	2.280	57.91	11.89	52.90	3.20	0.56
C0881-068-6250-M	0.881	22.38	0.068	1.73	6.250	158.75	1.991	50.56	1.301	33.04	15.02	66.81	3.53	0.62	**C0881-068-6250-S**	2.372	60.24	11.89	52.90	3.07	0.54
C0881-068-6500-M	0.881	22.38	0.068	1.73	6.500	165.10	2.066	52.49	1.348	34.25	15.02	66.81	3.39	0.59	**C0881-068-6500-S**	2.463	62.56	11.89	52.90	2.95	0.52
C0881-068-6750-M	0.881	22.38	0.068	1.73	6.750	171.45	2.142	54.41	1.396	35.45	15.02	66.81	3.26	0.57	**C0881-068-6750-S**	2.554	64.88	11.89	52.90	2.84	0.50
C0881-068-7000-M	0.881	22.38	0.068	1.73	7.000	177.80	2.218	56.34	1.443	36.65	15.02	66.81	3.14	0.55	**C0881-068-7000-S**	2.646	67.20	11.89	52.90	2.73	0.48
C0881-068-7500-M	0.881	22.38	0.068	1.73	7.500	190.50	2.370	60.19	1.538	39.06	15.02	66.81	2.93	0.51	**C0881-068-7500-S**	2.829	71.85	11.89	52.90	2.55	0.45
C0881-068-8000-M	0.881	22.38	0.068	1.73	8.000	203.20	2.521	64.04	1.632	41.46	15.02	66.81	2.74	0.48	**C0881-068-8000-S**	3.011	76.49	11.89	52.90	2.38	0.42
C0881-068-8500-M	0.881	22.38	0.068	1.73	8.500	215.90	2.673	67.90	1.727	43.87	15.02	66.81	2.58	0.45	**C0881-068-8500-S**	3.194	81.13	11.89	52.90	2.24	0.39
C0881-068-9000-M	0.881	22.38	0.068	1.73	9.000	228.60	2.825	71.75	1.822	46.27	15.02	66.81	2.43	0.43	**C0881-068-9000-S**	3.377	85.78	11.89	52.90	2.12	0.37
C0881-068-9500-M	0.881	22.38	0.068	1.73	9.500	241.30	2.976	75.60	1.917	48.68	15.02	66.81	2.30	0.40	**C0881-068-9500-S**	3.560	90.42	11.89	52.90	2.00	0.35
C0881-072-1625-M	0.881	22.38	0.072	1.83	1.625	41.28	0.621	15.77	0.466	11.83	17.62	78.36	17.54	3.07	**C0881-072-1625-S**	0.712	18.09	13.92	61.93	15.25	2.67
C0881-072-1750-M	0.881	22.38	0.072	1.83	1.750	44.45	0.661	16.79	0.492	12.50	17.62	78.36	16.18	2.83	**C0881-072-1750-S**	0.760	19.31	13.92	61.93	14.07	2.46
C0881-072-1875-M	0.881	22.38	0.072	1.83	1.875	47.63	0.701	17.81	0.519	13.18	17.62	78.36	15.01	2.63	**C0881-072-1875-S**	0.808	20.53	13.92	61.93	13.05	2.28
C0881-072-2000-M	0.881	22.38	0.072	1.83	2.000	50.80	0.741	18.83	0.545	13.85	17.62	78.36	14.00	2.45	**C0881-072-2000-S**	0.856	21.74	13.92	61.93	12.17	2.13
C0881-072-2125-M	0.881	22.38	0.072	1.83	2.125	53.98	0.782	19.85	0.572	14.52	17.62	78.36	13.11	2.29	**C0881-072-2125-S**	0.904	22.96	13.92	61.93	11.40	2.00
C0881-072-2250-M	0.881	22.38	0.072	1.83	2.250	57.15	0.822	20.88	0.598	15.20	17.62	78.36	12.34	2.16	**C0881-072-2250-S**	0.952	24.18	13.92	61.93	10.73	1.88
C0881-072-2375-M	0.881	22.38	0.072	1.83	2.375	60.33	0.862	21.90	0.625	15.87	17.62	78.36	11.64	2.04	**C0881-072-2375-S**	1.000	25.40	13.92	61.93	10.13	1.77
C0881-072-2500-M	0.881	22.38	0.072	1.83	2.500	63.50	0.902	22.92	0.651	16.55	17.62	78.36	11.03	1.93	**C0881-072-2500-S**	1.048	26.62	13.92	61.93	9.59	1.68
C0881-072-2625-M	0.881	22.38	0.072	1.83	2.625	66.68	0.943	23.94	0.678	17.22	17.62	78.36	10.47	1.83	**C0881-072-2625-S**	1.096	27.83	13.92	61.93	9.11	1.59
C0881-072-2750-M	0.881	22.38	0.072	1.83	2.750	69.85	0.983	24.96	0.705	17.90	17.62	78.36	9.97	1.74	**C0881-072-2750-S**	1.144	29.05	13.92	61.93	8.67	1.52
C0881-072-2875-M	0.881	22.38	0.072	1.83	2.875	73.03	1.023	25.99	0.731	18.57	17.62	78.36	9.51	1.66	**C0881-072-2875-S**	1.192	30.27	13.92	61.93	8.27	1.45
C0881-072-3000-M	0.881	22.38	0.072	1.83	3.000	76.20	1.063	27.01	0.758	19.24	17.62	78.36	9.10	1.59	**C0881-072-3000-S**	1.240	31.49	13.92	61.93	7.91	1.38
C0881-072-3250-M	0.881	22.38	0.072	1.83	3.250	82.55	1.144	29.05	0.811	20.59	17.62	78.36	8.36	1.46	**C0881-072-3250-S**	1.336	33.92	13.92	61.93	7.27	1.27
C0881-072-3500-M	0.881	22.38	0.072	1.83	3.500	88.90	1.224	31.10	0.864	21.94	17.62	78.36	7.74	1.35	**C0881-072-3500-S**	1.432	36.36	13.92	61.93	6.73	1.18
C0881-072-3750-M	0.881	22.38	0.072	1.83	3.750	95.25	1.305	33.14	0.917	23.29	17.62	78.36	7.20	1.26	**C0881-072-3750-S**	1.527	38.80	13.92	61.93	6.26	1.10
C0881-072-4000-M	0.881	22.38	0.072	1.83	4.000	101.60	1.385	35.18	0.970	24.64	17.62	78.36	6.74	1.18	**C0881-072-4000-S**	1.623	41.23	13.92	61.93	5.86	1.03
C0881-072-4250-M	0.881	22.38	0.072	1.83	4.250	107.95	1.466	37.23	1.023	25.99	17.62	78.36	6.33	1.11	**C0881-072-4250-S**	1.719	43.67	13.92	61.93	5.50	0.96
C0881-072-4500-M	0.881	22.38	0.072	1.83	4.500	114.30	1.546	39.27	1.076	27.33	17.62	78.36	5.96	1.04	**C0881-072-4500-S**	1.815	46.11	13.92	61.93	5.19	0.91
C0881-072-4750-M	0.881	22.38	0.072	1.83	4.750	120.65	1.627	41.32	1.129	28.68	17.62	78.36	5.64	0.99	**C0881-072-4750-S**	1.911	48.54	13.92	61.93	4.90	0.86
C0881-072-5000-M	0.881	22.38	0.072	1.83	5.000	127.00	1.707	43.36	1.182	30.03	17.62	78.36	5.35	0.94	**C0881-072-5000-S**	2.007	50.98	13.92	61.93	4.65	0.81
C0881-072-5250-M	0.881	22.38	0.072	1.83	5.250	133.35	1.788	45.40	1.235	31.38	17.62	78.36	5.09	0.89	**C0881-072-5250-S**	2.103	53.41	13.92	61.93	4.42	0.77
C0881-072-5500-M	0.881	22.38	0.072	1.83	5.500	139.70	1.868	47.45	1.288	32.73	17.62	78.36	4.85	0.85	**C0881-072-5500-S**	2.199	55.85	13.92	61.93	4.22	0.74
C0881-072-5750-M	0.881	22.38	0.072	1.83	5.750	146.05	1.949	49.49	1.342	34.08	17.62	78.36	4.63	0.81	**C0881-072-5750-S**	2.295	58.29	13.92	61.93	4.03	0.71
C0881-072-6000-M	0.881	22.38	0.072	1.83	6.000	152.40	2.029	51.54	1.395	35.42	17.62	78.36	4.44	0.78	**C0881-072-6000-S**	2.391	60.72	13.92	61.93	3.86	0.67
C0881-072-6250-M	0.881	22.38	0.072	1.83	6.250	158.75	2.109	53.58	1.448	36.77	17.62	78.36	4.25	0.74	**C0881-072-6250-S**	2.487	63.16	13.92	61.93	3.70	0.65
C0881-072-6500-M	0.881	22.38	0.072	1.83	6.500	165.10	2.190	55.62	1.501	38.12	17.62	78.36	4.09	0.72	**C0881-072-6500-S**	2.582	65.60	13.92	61.93	3.55	0.62
C0881-072-6750-M	0.881	22.38	0.072	1.83	6.750	171.45	2.270	57.67	1.554	39.47	17.62	78.36	3.93	0.69	**C0881-072-6750-S**	2.678	68.03	13.92	61.93	3.42	0.60
C0881-072-7000-M	0.881	22.38	0.072	1.83	7.000	177.80	2.351	59.71	1.607	40.82	17.62	78.36	3.79	0.66	**C0881-072-7000-S**	2.774	70.47	13.92	61.93	3.30	0.58
C0881-072-7500-M	0.881	22.38	0.072	1.83	7.500	190.50	2.512	63.80	1.713	43.51	17.62	78.36	3.53	0.62	**C0881-072-7500-S**	2.966	75.34	13.92	61.93	3.07	0.54
C0881-072-8000-M	0.881	22.38	0.072	1.83	8.000	203.20	2.673	67.89	1.819	46.21	17.62	78.36	3.31	0.58	**C0881-072-8000-S**	3.158	80.21	13.92	61.93	2.88	0.50
C0881-072-8500-M	0.881	22.38	0.072	1.83	8.500	215.90	2.834	71.98	1.925	48.91	17.62	78.36	3.11	0.54	**C0881-072-8500-S**	3.350	85.08	13.92	61.93	2.70	0.47
C0881-072-9000-M	0.881	22.38	0.072	1.83	9.000	228.60	2.995	76.06	2.032	51.60	17.62	78.36	2.93	0.51	**C0881-072-9000-S**	3.542	89.96	13.92	61.93	2.55	0.45
C0881-072-9500-M	0.881	22.38	0.072	1.83	9.500	241.30	3.156	80.15	2.138	54.30	17.62	78.36	2.78	0.49	**C0881-072-9500-S**	3.733	94.83	13.92	61.93	2.41	0.42
C0881-085-1500-M	0.881	22.38	0.085	2.16	1.500	38.10	0.684	17.36	0.566	14.39	27.95	124.32	34.23	5.99	**C0881-085-1500-S**	0.763	19.38	21.93	97.57	29.77	5.21
C0881-085-1625-M	0.881	22.38	0.085	2.16	1.625	41.28	0.732	18.59	0.603	15.31	27.95	124.32	31.29	5.48	**C0881-085-1625-S**	0.819	20.80	21.93	97.57	27.21	4.76
C0881-085-1750-M	0.881	22.38	0.085	2.16	1.750	44.45	0.780	19.81	0.639	16.24	27.95	124.32	28.81	5.04	**C0881-085-1750-S**	0.875	22.21	21.93	97.57	25.06	4.38
C0881-085-1875-M	0.881	22.38	0.085	2.16	1.875	47.63	0.828	21.04	0.676	17.17	27.95	124.32	26.70	4.67	**C0881-085-1875-S**	0.930	23.63	21.93	97.57	23.22	4.06
C0881-085-2000-M	0.881	22.38	0.085	2.16	2.000	50.80	0.877	22.27	0.712	18.09	27.95	124.32	24.88	4.35	**C0881-085-2000-S**	0.986	25.05	21.93	97.57	21.63	3.79
C0881-085-2125-M	0.881	22.38	0.085	2.16	2.125	53.98	0.925	23.49	0.749	19.02	27.95	124.32	23.29	4.08	**C0881-085-2125-S**	1.042	26.46	21.93	97.57	20.25	3.54
C0881-085-2250-M	0.881	22.38	0.085	2.16	2.250	57.15	0.973	24.72	0.785	19.94	27.95	124.32	21.89	3.83	**C0881-085-2250-S**	1.098	27.88	21.93	97.57	19.03	3.33
C0881-085-2375-M	0.881	22.38	0.085	2.16	2.375	60.33	1.021	25.94	0.822	20.87	27.95	124.32	20.65	3.61	**C0881-085-2375-S**	1.153	29.29	21.93	97.57	17.95	3.14
C0881-085-2500-M	0.881	22.38	0.085	2.16	2.500	63.50	1.070	27.17	0.858	21.80	27.95	124.32	19.54	3.42	**C0881-085-2500-S**	1.209	30.71	21.93	97.57	16.99	2.97
C0881-085-2625-M	0.881	22.38	0.085	2.16	2.625	66.68	1.118	28.39	0.895	22.72	27.95	124.32	18.54	3.25	**C0881-085-2625-S**	1.265	32.12	21.93	97.57	16.13	2.82
C0881-085-2750-M	0.881	22.38	0.085	2.16	2.750	69.85	1.166	29.62	0.931	23.65	27.95	124.32	17.65	3.09	**C0881-085-2750-S**	1.320	33.54	21.93	97.57	15.34	2.69
C0881-085-2875-M	0.881	22.38	0.085	2.16	2.875	73.03	1.214	30.85	0.967	24.57	27.95	124.32	16.83	2.95	**C0881-085-2875-S**	1.376	34.96	21.93	97.57	14.64	2.56
C0881-085-3000-M	0.881	22.38	0.085	2.16	3.000	76.20	1.263	32.07	1.004	25.50	27.95	124.32	16.09	2.82	**C0881-085-3000-S**	1.432	36.37	21.93	97.57	13.99	2.45
C0881-085-3250-M	0.881	22.38	0.085	2.16	3.250	82.55	1.359	34.52	1.077	27.35	27.95	124.32	14.78	2.59	**C0881-085-3250-S**	1.543	39.20	21.93	97.57	12.85	2.25
C0881-085-3500-M	0.881	22.38	0.085	2.16	3.500	88.90	1.456	36.98	1.150	29.20	27.95	124.32	13.67	2.39	**C0881-085-3500-S**	1.655	42.04	21.93	97.57	11.89	2.08
C0881-085-3750-M	0.881	22.38	0.085	2.16	3.750	95.25	1.552	39.43	1.223	31.06	27.95	124.32	12.72	2.23	**C0881-085-3750-S**	1.766	44.87	21.93	97.57	11.06	1.94
C0881-085-4000-M	0.881	22.38	0.085	2.16	4.000	101.60	1.649	41.88	1.296	32.91	27.95	124.32	11.89	2.08	**C0881-085-4000-S**	1.878	47.70	21.93	97.57	10.34	1.81

Part Numbers with an "*" are squared and not ground. **Part Numbers in bold** represent the newly expanded Associated Spring RAYMOND compression spring offering.

MUSIC WIRE															STAINLESS STEEL						
Catalog #	Outside Diameter (OD)		Wire Diameter (d)		Free Length (L) Approx		Load Length (L_1)		Solid Height (Sh) Approx		Load (P) at L_1		Spring Rate (R)		Catalog #	Load Length (L_1)		Load (P) at L_1		Spring Rate (R)	
	in	mm	in	mm	in	mm	in	mm	in	mm	lb	N	lb/in	N/mm		in	mm	lb	N	lb/in	N/mm
C0881-085-4250-M	0.881	22.38	0.085	2.16	4.250	107.95	1.745	44.33	1.369	34.76	27.95	124.32	11.16	1.95	**C0881-085-4250-S**	1.989	50.53	21.93	97.57	9.70	1.70
C0881-085-4500-M	0.881	22.38	0.085	2.16	4.500	114.30	1.842	46.78	1.441	36.61	27.95	124.32	10.51	1.84	**C0881-085-4500-S**	2.101	53.36	21.93	97.57	9.14	1.60
C0881-085-4750-M	0.881	22.38	0.085	2.16	4.750	120.65	1.938	49.24	1.514	38.46	27.95	124.32	9.94	1.74	**C0881-085-4750-S**	2.212	56.19	21.93	97.57	8.64	1.51
C0881-085-5000-M	0.881	22.38	0.085	2.16	5.000	127.00	2.035	51.69	1.587	40.32	27.95	124.32	9.43	1.65	**C0881-085-5000-S**	2.324	59.03	21.93	97.57	8.20	1.43
C0881-085-5250-M	0.881	22.38	0.085	2.16	5.250	133.35	2.131	54.14	1.660	42.17	27.95	124.32	8.96	1.57	**C0881-085-5250-S**	2.435	61.86	21.93	97.57	7.79	1.36
C0881-085-5500-M	0.881	22.38	0.085	2.16	5.500	139.70	2.228	56.59	1.733	44.02	27.95	124.32	8.54	1.49	**C0881-085-5500-S**	2.547	64.69	21.93	97.57	7.43	1.30
C0881-085-5750-M	0.881	22.38	0.085	2.16	5.750	146.05	2.325	59.04	1.806	45.87	27.95	124.32	8.16	1.43	**C0881-085-5750-S**	2.658	67.52	21.93	97.57	7.10	1.24
C0881-085-6000-M	0.881	22.38	0.085	2.16	6.000	152.40	2.421	61.49	1.879	47.73	27.95	124.32	7.81	1.37	**C0881-085-6000-S**	2.770	70.35	21.93	97.57	6.79	1.19
C0881-085-6250-M	0.881	22.38	0.085	2.16	6.250	158.75	2.518	63.95	1.952	49.58	27.95	124.32	7.49	1.31	**C0881-085-6250-S**	2.881	73.18	21.93	97.57	6.51	1.14
C0881-085-6500-M	0.881	22.38	0.085	2.16	6.500	165.10	2.614	66.40	2.025	51.43	27.95	124.32	7.19	1.26	**C0881-085-6500-S**	2.993	76.02	21.93	97.57	6.25	1.09
C0881-085-6750-M	0.881	22.38	0.085	2.16	6.750	171.45	2.711	68.85	2.098	53.28	27.95	124.32	6.92	1.21	**C0881-085-6750-S**	3.104	78.85	21.93	97.57	6.02	1.05
C0881-085-7000-M	0.881	22.38	0.085	2.16	7.000	177.80	2.807	71.30	2.171	55.13	27.95	124.32	6.67	1.17	**C0881-085-7000-S**	3.216	81.68	21.93	97.57	5.80	1.01
C0881-085-7500-M	0.881	22.38	0.085	2.16	7.500	190.50	3.000	76.21	2.316	58.84	27.95	124.32	6.21	1.09	**C0881-085-7500-S**	3.439	87.34	21.93	97.57	5.40	0.95
C0881-085-8000-M	0.881	22.38	0.085	2.16	8.000	203.20	3.193	81.11	2.462	62.54	27.95	124.32	5.81	1.02	**C0881-085-8000-S**	3.662	93.01	21.93	97.57	5.06	0.88
C0881-085-8500-M*	0.881	22.38	0.085	2.16	8.500	215.90	3.439	87.34	2.673	67.88	27.95	124.32	5.52	0.97	**C0881-085-8500-S***	3.932	99.86	21.93	97.57	4.80	0.84
C0881-085-9000-M*	0.881	22.38	0.085	2.16	9.000	228.60	3.632	92.24	2.818	71.59	27.95	124.32	5.21	0.91	**C0881-085-9000-S***	4.155	105.53	21.93	97.57	4.53	0.79
C0881-085-9500-M*	0.881	22.38	0.085	2.16	9.500	241.30	3.825	97.15	2.964	75.29	27.95	124.32	4.92	0.86	**C0881-085-9500-S***	4.378	111.19	21.93	97.57	4.28	0.75
C0881-092-1375-M	0.881	22.38	0.092	2.34	1.375	34.93	0.687	17.45	0.594	15.08	34.80	154.80	50.57	8.85	**C0881-092-1375-S**	0.757	19.22	27.20	120.97	43.98	7.70
C0881-092-1500-M	0.881	22.38	0.092	2.34	1.500	38.10	0.740	18.79	0.636	16.15	34.80	154.80	45.77	8.01	**C0881-092-1500-S**	0.817	20.74	27.20	120.97	39.80	6.96
C0881-092-1625-M	0.881	22.38	0.092	2.34	1.625	41.28	0.792	20.13	0.678	17.22	34.80	154.80	41.80	7.31	**C0881-092-1625-S**	0.877	22.27	27.20	120.97	36.35	6.36
C0881-092-1750-M	0.881	22.38	0.092	2.34	1.750	44.45	0.845	21.47	0.720	18.28	34.80	154.80	38.46	6.73	**C0881-092-1750-S**	0.937	23.80	27.20	120.97	33.45	5.85
C0881-092-1875-M	0.881	22.38	0.092	2.34	1.875	47.63	0.898	22.81	0.762	19.35	34.80	154.80	35.62	6.23	**C0881-092-1875-S**	0.997	25.32	27.20	120.97	30.97	5.42
C0881-092-2000-M	0.881	22.38	0.092	2.34	2.000	50.80	0.951	24.15	0.804	20.42	34.80	154.80	33.17	5.80	**C0881-092-2000-S**	1.057	26.85	27.20	120.97	28.84	5.05
C0881-092-2125-M	0.881	22.38	0.092	2.34	2.125	53.98	1.004	25.49	0.846	21.49	34.80	154.80	31.03	5.43	**C0881-092-2125-S**	1.117	28.38	27.20	120.97	26.98	4.72
C0881-092-2250-M	0.881	22.38	0.092	2.34	2.250	57.15	1.056	26.83	0.888	22.55	34.80	154.80	29.15	5.10	**C0881-092-2250-S**	1.177	29.90	27.20	120.97	25.35	4.44
C0881-092-2375-M	0.881	22.38	0.092	2.34	2.375	60.33	1.109	28.17	0.930	23.62	34.80	154.80	27.49	4.81	**C0881-092-2375-S**	1.237	31.43	27.20	120.97	23.90	4.18
C0881-092-2500-M	0.881	22.38	0.092	2.34	2.500	63.50	1.162	29.51	0.972	24.69	34.80	154.80	26.01	4.55	**C0881-092-2500-S**	1.297	32.95	27.20	120.97	22.61	3.96
C0881-092-2625-M	0.881	22.38	0.092	2.34	2.625	66.68	1.215	30.85	1.014	25.76	34.80	154.80	24.68	4.32	**C0881-092-2625-S**	1.358	34.48	27.20	120.97	21.46	3.75
C0881-092-2750-M	0.881	22.38	0.092	2.34	2.750	69.85	1.267	32.19	1.056	26.82	34.80	154.80	23.47	4.11	**C0881-092-2750-S**	1.418	36.01	27.20	120.97	20.41	3.57
C0881-092-2875-M	0.881	22.38	0.092	2.34	2.875	73.03	1.320	33.53	1.098	27.89	34.80	154.80	22.38	3.92	**C0881-092-2875-S**	1.478	37.53	27.20	120.97	19.46	3.41
C0881-092-3000-M	0.881	22.38	0.092	2.34	3.000	76.20	1.373	34.87	1.140	28.96	34.80	154.80	21.39	3.74	**C0881-092-3000-S**	1.538	39.06	27.20	120.97	18.60	3.25
C0881-092-3250-M	0.881	22.38	0.092	2.34	3.250	82.55	1.479	37.55	1.224	31.09	34.80	154.80	19.65	3.44	**C0881-092-3250-S**	1.658	42.11	27.20	120.97	17.08	2.99
C0881-092-3500-M	0.881	22.38	0.092	2.34	3.500	88.90	1.584	40.24	1.308	33.23	34.80	154.80	18.16	3.18	**C0881-092-3500-S**	1.778	45.17	27.20	120.97	15.80	2.76
C0881-092-3750-M	0.881	22.38	0.092	2.34	3.750	95.25	1.690	42.92	1.392	35.37	34.80	154.80	16.89	2.96	**C0881-092-3750-S**	1.898	48.22	27.20	120.97	14.69	2.57
C0881-092-4000-M	0.881	22.38	0.092	2.34	4.000	101.60	1.795	45.60	1.476	37.50	34.80	154.80	15.78	2.76	**C0881-092-4000-S**	2.019	51.27	27.20	120.97	13.73	2.40
C0881-092-4250-M	0.881	22.38	0.092	2.34	4.250	107.95	1.901	48.28	1.560	39.64	34.80	154.80	14.81	2.59	**C0881-092-4250-S**	2.139	54.32	27.20	120.97	12.88	2.25
C0881-092-4500-M	0.881	22.38	0.092	2.34	4.500	114.30	2.006	50.96	1.645	41.77	34.80	154.80	13.96	2.44	**C0881-092-4500-S**	2.259	57.38	27.20	120.97	12.14	2.12
C0881-092-4750-M	0.881	22.38	0.092	2.34	4.750	120.65	2.112	53.64	1.729	43.91	34.80	154.80	13.19	2.31	**C0881-092-4750-S**	2.379	60.43	27.20	120.97	11.47	2.01
C0881-092-5000-M	0.881	22.38	0.092	2.34	5.000	127.00	2.217	56.32	1.813	46.04	34.80	154.80	12.51	2.19	**C0881-092-5000-S**	2.499	63.48	27.20	120.97	10.88	1.90
C0881-092-5250-M	0.881	22.38	0.092	2.34	5.250	133.35	2.323	59.00	1.897	48.18	34.80	154.80	11.89	2.08	**C0881-092-5250-S**	2.620	66.54	27.20	120.97	10.34	1.81
C0881-092-5500-M	0.881	22.38	0.092	2.34	5.500	139.70	2.429	61.68	1.981	50.31	34.80	154.80	11.33	1.98	**C0881-092-5500-S**	2.740	69.59	27.20	120.97	9.85	1.72
C0881-092-5750-M	0.881	22.38	0.092	2.34	5.750	146.05	2.534	64.37	2.065	52.45	34.80	154.80	10.82	1.89	**C0881-092-5750-S**	2.860	72.64	27.20	120.97	9.41	1.65
C0881-092-6000-M	0.881	22.38	0.092	2.34	6.000	152.40	2.640	67.05	2.149	54.58	34.80	154.80	10.36	1.81	**C0881-092-6000-S**	2.980	75.69	27.20	120.97	9.01	1.58
C0881-092-6250-M	0.881	22.38	0.092	2.34	6.250	158.75	2.745	69.73	2.233	56.72	34.80	154.80	9.93	1.74	**C0881-092-6250-S**	3.100	78.75	27.20	120.97	8.63	1.51
C0881-092-6500-M	0.881	22.38	0.092	2.34	6.500	165.10	2.851	72.41	2.317	58.85	34.80	154.80	9.54	1.67	**C0881-092-6500-S**	3.220	81.80	27.20	120.97	8.29	1.45
C0881-092-6750-M	0.881	22.38	0.092	2.34	6.750	171.45	2.956	75.09	2.401	60.99	34.80	154.80	9.17	1.61	**C0881-092-6750-S**	3.341	84.85	27.20	120.97	7.98	1.40
C0881-092-7000-M	0.881	22.38	0.092	2.34	7.000	177.80	3.062	77.77	2.485	63.12	34.80	154.80	8.84	1.55	**C0881-092-7000-S**	3.461	87.91	27.20	120.97	7.68	1.34
C0881-092-7500-M	0.881	22.38	0.092	2.34	7.500	190.50	3.273	83.13	2.653	67.39	34.80	154.80	8.23	1.44	**C0881-092-7500-S**	3.701	94.01	27.20	120.97	7.16	1.25
C0881-092-8000-M	0.881	22.38	0.092	2.34	8.000	203.20	3.484	88.49	2.821	71.67	34.80	154.80	7.71	1.35	**C0881-092-8000-S**	3.942	100.12	27.20	120.97	6.70	1.17
C0881-092-8500-M	0.881	22.38	0.092	2.34	8.500	215.90	3.695	93.86	2.990	75.94	34.80	154.80	7.24	1.27	**C0881-092-8500-S**	4.182	106.22	27.20	120.97	6.30	1.10
C0881-092-9000-M*	0.881	22.38	0.092	2.34	9.000	228.60	3.959	100.57	3.223	81.87	34.80	154.80	6.90	1.21	**C0881-092-9000-S***	4.470	113.54	27.20	120.97	6.00	1.05
C0881-092-9500-M*	0.881	22.38	0.092	2.34	9.500	241.30	4.171	105.93	3.392	86.15	34.80	154.80	6.53	1.14	**C0881-092-9500-S***	4.711	119.65	27.20	120.97	5.68	0.99
C0881-098-1375-M	0.881	22.38	0.098	2.49	1.375	34.93	0.731	18.56	0.648	16.45	41.44	184.34	64.31	11.25	**C0881-098-1375-S**	0.798	20.27	32.26	143.49	55.92	9.79
C0881-098-1500-M	0.881	22.38	0.098	2.49	1.500	38.10	0.787	20.00	0.695	17.64	41.44	184.34	58.15	10.18	**C0881-098-1500-S**	0.862	21.89	32.26	143.49	50.56	8.85
C0881-098-1625-M	0.881	22.38	0.098	2.49	1.625	41.28	0.844	21.44	0.741	18.83	41.44	184.34	53.06	9.29	**C0881-098-1625-S**	0.926	23.52	32.26	143.49	46.14	8.07
C0881-098-1750-M	0.881	22.38	0.098	2.49	1.750	44.45	0.901	22.88	0.788	20.02	41.44	184.34	48.79	8.54	**C0881-098-1750-S**	0.990	25.14	32.26	143.49	42.43	7.42
C0881-098-1875-M	0.881	22.38	0.098	2.49	1.875	47.63	0.957	24.32	0.835	21.21	41.44	184.34	45.16	7.90	**C0881-098-1875-S**	1.054	26.76	32.26	143.49	39.27	6.87
C0881-098-2000-M	0.881	22.38	0.098	2.49	2.000	50.80	1.014	25.76	0.882	22.40	41.44	184.34	42.03	7.36	**C0881-098-2000-S**	1.117	28.38	32.26	143.49	36.55	6.40
C0881-098-2125-M	0.881	22.38	0.098	2.49	2.125	53.98	1.071	27.20	0.929	23.59	41.44	184.34	39.31	6.88	**C0881-098-2125-S**	1.181	30.00	32.26	143.49	34.18	5.98
C0881-098-2250-M	0.881	22.38	0.098	2.49	2.250	57.15	1.127	28.64	0.976	24.78	41.44	184.34	36.92	6.46	**C0881-098-2250-S**	1.245	31.62	32.26	143.49	32.10	5.62
C0881-098-2375-M	0.881	22.38	0.098	2.49	2.375	60.33	1.184	30.07	1.023	25.97	41.44	184.34	34.80	6.09	**C0881-098-2375-S**	1.309	33.25	32.26	143.49	30.26	5.30
C0881-098-2500-M	0.881	22.38	0.098	2.49	2.500	63.50	1.241	31.51	1.069	27.16	41.44	184.34	32.91	5.76	**C0881-098-2500-S**	1.373	34.87	32.26	143.49	28.62	5.01
C0881-098-2625-M	0.881	22.38	0.098	2.49	2.625	66.68	1.297	32.95	1.116	28.35	41.44	184.34	31.22	5.46	**C0881-098-2625-S**	1.437	36.49	32.26	143.49	27.14	4.75
C0881-098-2750-M	0.881	22.38	0.098	2.49	2.750	69.85	1.354	34.39	1.163	29.54	41.44	184.34	29.69	5.20	**C0881-098-2750-S**	1.500	38.11	32.26	143.49	25.82	4.52

FOR INFORMATION ON ALTERNATIVE FINISHES, SEE PAGE 311

Part Numbers with an "*" are squared and not ground. **Part Numbers in bold** represent the newly expanded Associated Spring RAYMOND compression spring offering.

MUSIC WIRE															STAINLESS STEEL					
Catalog #	Outside Diameter (OD)		Wire Diameter (d)		Free Length (L) Approx		Load Length (L_1)		Solid Height (Sh) Approx		Load (P) at L_1		Spring Rate (R)		Catalog #	Load Length (L_1)		Load (P) at L_1		Spring Rate (R)	
	in	mm	in	mm	in	mm	in	mm	in	mm	lb	N	lb/in	N/mm		in	mm	lb	N	lb/in	N/mm
C0881-098-2875-M	0.881	22.38	0.098	2.49	2.875	73.03	1.411	35.83	1.210	30.73	41.44	184.34	28.30	4.95	**C0881-098-2875-S**	1.564	39.73	32.26	143.49	24.61	4.31
C0881-098-3000-M	0.881	22.38	0.098	2.49	3.000	76.20	1.467	37.27	1.257	31.92	41.44	184.34	27.04	4.73	**C0881-098-3000-S**	1.628	41.35	32.26	143.49	23.51	4.11
C0881-098-3250-M	0.881	22.38	0.098	2.49	3.250	82.55	1.581	40.15	1.351	34.30	41.44	184.34	24.83	4.34	**C0881-098-3250-S**	1.756	44.60	32.26	143.49	21.59	3.78
C0881-098-3500-M	0.881	22.38	0.098	2.49	3.500	88.90	1.694	43.03	1.444	36.68	41.44	184.34	22.95	4.02	**C0881-098-3500-S**	1.883	47.84	32.26	143.49	19.96	3.49
C0881-098-3750-M	0.881	22.38	0.098	2.49	3.750	95.25	1.808	45.91	1.538	39.06	41.44	184.34	21.33	3.73	**C0881-098-3750-S**	2.011	51.08	32.26	143.49	18.55	3.25
C0881-098-4000-M	0.881	22.38	0.098	2.49	4.000	101.60	1.921	48.79	1.632	41.44	41.44	184.34	19.93	3.49	**C0881-098-4000-S**	2.139	54.33	32.26	143.49	17.33	3.03
C0881-098-4250-M	0.881	22.38	0.098	2.49	4.250	107.95	2.034	51.67	1.725	43.82	41.44	184.34	18.70	3.27	**C0881-098-4250-S**	2.267	57.57	32.26	143.49	16.26	2.85
C0881-098-4500-M	0.881	22.38	0.098	2.49	4.500	114.30	2.148	54.55	1.819	46.21	41.44	184.34	17.62	3.08	**C0881-098-4500-S**	2.394	60.81	32.26	143.49	15.32	2.68
C0881-098-4750-M	0.881	22.38	0.098	2.49	4.750	120.65	2.261	57.43	1.913	48.59	41.44	184.34	16.65	2.91	**C0881-098-4750-S**	2.522	64.06	32.26	143.49	14.48	2.53
C0881-098-5000-M	0.881	22.38	0.098	2.49	5.000	127.00	2.374	60.31	2.007	50.97	41.44	184.34	15.78	2.76	**C0881-098-5000-S**	2.650	67.30	32.26	143.49	13.73	2.40
C0881-098-5250-M	0.881	22.38	0.098	2.49	5.250	133.35	2.488	63.19	2.100	53.35	41.44	184.34	15.00	2.63	**C0881-098-5250-S**	2.777	70.54	32.26	143.49	13.05	2.28
C0881-098-5500-M	0.881	22.38	0.098	2.49	5.500	139.70	2.601	66.07	2.194	55.73	41.44	184.34	14.30	2.50	**C0881-098-5500-S**	2.905	73.79	32.26	143.49	12.43	2.18
C0881-098-5750-M	0.881	22.38	0.098	2.49	5.750	146.05	2.714	68.95	2.288	58.11	41.44	184.34	13.65	2.39	**C0881-098-5750-S**	3.033	77.03	32.26	143.49	11.87	2.08
C0881-098-6000-M	0.881	22.38	0.098	2.49	6.000	152.40	2.828	71.83	2.381	60.49	41.44	184.34	13.06	2.29	**C0881-098-6000-S**	3.160	80.27	32.26	143.49	11.36	1.99
C0881-098-6250-M	0.881	22.38	0.098	2.49	6.250	158.75	2.941	74.70	2.475	62.87	41.44	184.34	12.52	2.19	**C0881-098-6250-S**	3.288	83.51	32.26	143.49	10.89	1.91
C0881-098-6500-M	0.881	22.38	0.098	2.49	6.500	165.10	3.054	77.58	2.569	65.25	41.44	184.34	12.03	2.10	**C0881-098-6500-S**	3.416	86.76	32.26	143.49	10.46	1.83
C0881-098-6750-M	0.881	22.38	0.098	2.49	6.750	171.45	3.168	80.46	2.662	67.63	41.44	184.34	11.57	2.02	**C0881-098-6750-S**	3.543	90.00	32.26	143.49	10.06	1.76
C0881-098-7000-M	0.881	22.38	0.098	2.49	7.000	177.80	3.281	83.34	2.756	70.01	41.44	184.34	11.14	1.95	**C0881-098-7000-S**	3.671	93.24	32.26	143.49	9.69	1.70
C0881-098-7500-M	0.881	22.38	0.098	2.49	7.500	190.50	3.508	89.10	2.944	74.77	41.44	184.34	10.38	1.82	**C0881-098-7500-S**	3.926	99.73	32.26	143.49	9.03	1.58
C0881-098-8000-M	0.881	22.38	0.098	2.49	8.000	203.20	3.735	94.86	3.131	79.53	41.44	184.34	9.72	1.70	**C0881-098-8000-S**	4.182	106.22	32.26	143.49	8.45	1.48
C0881-098-8500-M	0.881	22.38	0.098	2.49	8.500	215.90	3.961	100.62	3.318	84.29	41.44	184.34	9.13	1.60	**C0881-098-8500-S**	4.437	112.70	32.26	143.49	7.94	1.39
C0881-098-9000-M	0.881	22.38	0.098	2.49	9.000	228.60	4.188	106.38	3.506	89.05	41.44	184.34	8.61	1.51	**C0881-098-9000-S**	4.692	119.19	32.26	143.49	7.49	1.31
C0881-098-9500-M	0.881	22.38	0.098	2.49	9.500	241.30	4.415	112.14	3.693	93.81	41.44	184.34	8.15	1.43	**C0881-098-9500-S**	4.948	125.68	32.26	143.49	7.09	1.24
C0881-105-1375-M	0.881	22.38	0.105	2.67	1.375	34.93	0.781	19.83	0.709	18.02	50.13	222.97	84.32	14.76	**C0881-105-1375-S**	0.845	21.47	38.83	172.74	73.32	12.83
C0881-105-1500-M	0.881	22.38	0.105	2.67	1.500	38.10	0.842	21.38	0.762	19.35	50.13	222.97	76.15	13.33	**C0881-105-1500-S**	0.914	23.20	38.83	172.74	66.22	11.59
C0881-105-1625-M	0.881	22.38	0.105	2.67	1.625	41.28	0.903	22.94	0.814	20.68	50.13	222.97	69.42	12.15	**C0881-105-1625-S**	0.982	24.94	38.83	172.74	60.37	10.56
C0881-105-1750-M	0.881	22.38	0.105	2.67	1.750	44.45	0.964	24.49	0.867	22.02	50.13	222.97	63.79	11.16	**C0881-105-1750-S**	1.050	26.67	38.83	172.74	55.47	9.71
C0881-105-1875-M	0.881	22.38	0.105	2.67	1.875	47.63	1.025	26.04	0.919	23.35	50.13	222.97	59.00	10.33	**C0881-105-1875-S**	1.118	28.40	38.83	172.74	51.30	8.98
C0881-105-2000-M	0.881	22.38	0.105	2.67	2.000	50.80	1.087	27.60	0.972	24.68	50.13	222.97	54.88	9.60	**C0881-105-2000-S**	1.186	30.13	38.83	172.74	47.72	8.35
C0881-105-2125-M	0.881	22.38	0.105	2.67	2.125	53.98	1.148	29.15	1.024	26.01	50.13	222.97	51.30	8.98	**C0881-105-2125-S**	1.254	31.86	38.83	172.74	44.61	7.81
C0881-105-2250-M	0.881	22.38	0.105	2.67	2.250	57.15	1.209	30.71	1.077	27.35	50.13	222.97	48.15	8.43	**C0881-105-2250-S**	1.323	33.59	38.83	172.74	41.87	7.33
C0881-105-2375-M	0.881	22.38	0.105	2.67	2.375	60.33	1.270	32.26	1.129	28.68	50.13	222.97	45.37	7.94	**C0881-105-2375-S**	1.391	35.33	38.83	172.74	39.46	6.90
C0881-105-2500-M	0.881	22.38	0.105	2.67	2.500	63.50	1.331	33.82	1.182	30.01	50.13	222.97	42.90	7.51	**C0881-105-2500-S**	1.459	37.06	38.83	172.74	37.30	6.53
C0881-105-2625-M	0.881	22.38	0.105	2.67	2.625	66.68	1.393	35.37	1.234	31.34	50.13	222.97	40.68	7.12	**C0881-105-2625-S**	1.527	38.79	38.83	172.74	35.37	6.19
C0881-105-2750-M	0.881	22.38	0.105	2.67	2.750	69.85	1.454	36.93	1.286	32.68	50.13	222.97	38.68	6.77	**C0881-105-2750-S**	1.595	40.52	38.83	172.74	33.63	5.89
C0881-105-2875-M	0.881	22.38	0.105	2.67	2.875	73.03	1.515	38.48	1.339	34.01	50.13	222.97	36.86	6.45	**C0881-105-2875-S**	1.663	42.25	38.83	172.74	32.05	5.61
C0881-105-3000-M	0.881	22.38	0.105	2.67	3.000	76.20	1.576	40.04	1.391	35.34	50.13	222.97	35.21	6.16	**C0881-105-3000-S**	1.732	43.98	38.83	172.74	30.62	5.36
C0881-105-3250-M	0.881	22.38	0.105	2.67	3.250	82.55	1.699	43.15	1.496	38.00	50.13	222.97	32.31	5.65	**C0881-105-3250-S**	1.868	47.45	38.83	172.74	28.10	4.92
C0881-105-3500-M	0.881	22.38	0.105	2.67	3.500	88.90	1.821	46.26	1.601	40.67	50.13	222.97	29.86	5.23	**C0881-105-3500-S**	2.004	50.91	38.83	172.74	25.96	4.54
C0881-105-3750-M	0.881	22.38	0.105	2.67	3.750	95.25	1.944	49.37	1.706	43.33	50.13	222.97	27.75	4.86	**C0881-105-3750-S**	2.141	54.37	38.83	172.74	24.13	4.22
C0881-105-4000-M	0.881	22.38	0.105	2.67	4.000	101.60	2.066	52.48	1.811	46.00	50.13	222.97	25.92	4.54	**C0881-105-4000-S**	2.277	57.84	38.83	172.74	22.54	3.94
C0881-105-4250-M	0.881	22.38	0.105	2.67	4.250	107.95	2.188	55.59	1.916	48.66	50.13	222.97	24.32	4.26	**C0881-105-4250-S**	2.413	61.30	38.83	172.74	21.14	3.70
C0881-105-4500-M	0.881	22.38	0.105	2.67	4.500	114.30	2.311	58.70	2.021	51.33	50.13	222.97	22.90	4.01	**C0881-105-4500-S**	2.550	64.76	38.83	172.74	19.91	3.48
C0881-105-4750-M	0.881	22.38	0.105	2.67	4.750	120.65	2.433	61.81	2.126	53.99	50.13	222.97	21.64	3.79	**C0881-105-4750-S**	2.686	68.23	38.83	172.74	18.82	3.29
C0881-105-5000-M	0.881	22.38	0.105	2.67	5.000	127.00	2.556	64.92	2.231	56.66	50.13	222.97	20.51	3.59	**C0881-105-5000-S**	2.822	71.69	38.83	172.74	17.83	3.12
C0881-105-5250-M	0.881	22.38	0.105	2.67	5.250	133.35	2.678	68.03	2.336	59.32	50.13	222.97	19.49	3.41	**C0881-105-5250-S**	2.959	75.15	38.83	172.74	16.95	2.97
C0881-105-5500-M	0.881	22.38	0.105	2.67	5.500	139.70	2.801	71.14	2.440	61.99	50.13	222.97	18.57	3.25	**C0881-105-5500-S**	3.095	78.61	38.83	172.74	16.15	2.83
C0881-105-5750-M	0.881	22.38	0.105	2.67	5.750	146.05	2.923	74.25	2.545	64.65	50.13	222.97	17.73	3.10	**C0881-105-5750-S**	3.231	82.08	38.83	172.74	15.42	2.70
C0881-105-6000-M	0.881	22.38	0.105	2.67	6.000	152.40	3.045	77.36	2.650	67.32	50.13	222.97	16.97	2.97	**C0881-105-6000-S**	3.368	85.54	38.83	172.74	14.75	2.58
C0881-105-6250-M	0.881	22.38	0.105	2.67	6.250	158.75	3.168	80.47	2.755	69.98	50.13	222.97	16.26	2.85	**C0881-105-6250-S**	3.504	89.00	38.83	172.74	14.14	2.48
C0881-105-6500-M	0.881	22.38	0.105	2.67	6.500	165.10	3.290	83.58	2.860	72.65	50.13	222.97	15.62	2.73	**C0881-105-6500-S**	3.640	92.47	38.83	172.74	13.58	2.38
C0881-105-6750-M	0.881	22.38	0.105	2.67	6.750	171.45	3.413	86.68	2.965	75.31	50.13	222.97	15.02	2.63	**C0881-105-6750-S**	3.777	95.93	38.83	172.74	13.06	2.29
C0881-105-7000-M	0.881	22.38	0.105	2.67	7.000	177.80	3.535	89.79	3.070	77.98	50.13	222.97	14.47	2.53	**C0881-105-7000-S**	3.913	99.39	38.83	172.74	12.58	2.20
C0881-105-7500-M	0.881	22.38	0.105	2.67	7.500	190.50	3.780	96.01	3.280	83.31	50.13	222.97	13.48	2.36	**C0881-105-7500-S**	4.186	106.32	38.83	172.74	11.72	2.05
C0881-105-8000-M	0.881	22.38	0.105	2.67	8.000	203.20	4.025	102.23	3.490	88.64	50.13	222.97	12.61	2.21	**C0881-105-8000-S**	4.459	113.25	38.83	172.74	10.97	1.92
C0881-105-8500-M	0.881	22.38	0.105	2.67	8.500	215.90	4.270	108.45	3.699	93.97	50.13	222.97	11.85	2.07	**C0881-105-8500-S**	4.731	120.17	38.83	172.74	10.30	1.80
C0881-105-9000-M	0.881	22.38	0.105	2.67	9.000	228.60	4.515	114.67	3.909	99.30	50.13	222.97	11.18	1.96	**C0881-105-9000-S**	5.004	127.10	38.83	172.74	9.72	1.70
C0881-105-9500-M	0.881	22.38	0.105	2.67	9.500	241.30	4.760	120.89	4.119	104.63	50.13	222.97	10.57	1.85	**C0881-105-9500-S**	5.277	134.03	38.83	172.74	9.20	1.61
C0881-112-1250-M	0.881	22.38	0.112	2.85	1.250	31.75	0.763	19.38	0.711	18.06	59.86	266.28	122.94	21.51	**C0881-112-1250-S**	0.818	20.79	46.15	205.28	106.90	18.71
C0881-112-1375-M	0.881	22.38	0.112	2.85	1.375	34.93	0.829	21.05	0.769	19.53	59.86	266.28	109.59	19.18	**C0881-112-1375-S**	0.891	22.62	46.15	205.28	95.29	16.68
C0881-112-1500-M	0.881	22.38	0.112	2.85	1.500	38.10	0.894	22.72	0.827	21.00	59.86	266.28	98.85	17.30	**C0881-112-1500-S**	0.963	24.46	46.15	205.28	85.96	15.04
C0881-112-1625-M	0.881	22.38	0.112	2.85	1.625	41.28	0.960	24.39	0.885	22.48	59.86	266.28	90.03	15.76	**C0881-112-1625-S**	1.036	26.30	46.15	205.28	78.29	13.70
C0881-112-1750-M	0.881	22.38	0.112	2.85	1.750	44.45	1.026	26.05	0.943	23.95	59.86	266.28	82.66	14.46	**C0881-112-1750-S**	1.108	28.14	46.15	205.28	71.88	12.58
C0881-112-1875-M	0.881	22.38	0.112	2.85	1.875	47.63	1.091	27.72	1.001	25.42	59.86	266.28	76.40	13.37	**C0881-112-1875-S**	1.180	29.98	46.15	205.28	66.43	11.63

Part Numbers with an "*" are squared and not ground. **Part Numbers in bold** represent the newly expanded Associated Spring RAYMOND compression spring offering.

MUSIC WIRE															STAINLESS STEEL						
Catalog #	Outside Diameter (OD)		Wire Diameter (d)		Free Length (L) Approx		Load Length (L_1)		Solid Height (Sh) Approx		Load (P) at L_1		Spring Rate (R)		Catalog #	Load Length (L_1)		Load (P) at L_1		Spring Rate (R)	
	in	mm	in	mm	in	mm	in	mm	in	mm	lb	N	lb/in	N/mm		in	mm	lb	N	lb/in	N/mm
C0881-112-2000-M	**0.881**	**22.38**	**0.112**	**2.85**	**2.000**	**50.80**	**1.157**	**29.39**	**1.059**	**26.89**	**59.86**	**266.28**	**71.02**	**12.43**	**C0881-112-2000-S**	**1.253**	**31.82**	**46.15**	**205.28**	**61.76**	**10.81**
C0881-112-2125-M	**0.881**	**22.38**	**0.112**	**2.85**	**2.125**	**53.98**	**1.223**	**31.06**	**1.117**	**28.37**	**59.86**	**266.28**	**66.35**	**11.61**	**C0881-112-2125-S**	**1.325**	**33.66**	**46.15**	**205.28**	**57.70**	**10.10**
C0881-112-2250-M	**0.881**	**22.38**	**0.112**	**2.85**	**2.250**	**57.15**	**1.288**	**32.73**	**1.175**	**29.84**	**59.86**	**266.28**	**62.26**	**10.90**	**C0881-112-2250-S**	**1.398**	**35.50**	**46.15**	**205.28**	**54.14**	**9.47**
C0881-112-2375-M	**0.881**	**22.38**	**0.112**	**2.85**	**2.375**	**60.33**	**1.354**	**34.40**	**1.233**	**31.31**	**59.86**	**266.28**	**58.64**	**10.26**	**C0881-112-2375-S**	**1.470**	**37.34**	**46.15**	**205.28**	**50.99**	**8.92**
C0881-112-2500-M	**0.881**	**22.38**	**0.112**	**2.85**	**2.500**	**63.50**	**1.420**	**36.06**	**1.291**	**32.78**	**59.86**	**266.28**	**55.42**	**9.70**	**C0881-112-2500-S**	**1.542**	**39.18**	**46.15**	**205.28**	**48.19**	**8.43**
C0881-112-2625-M	**0.881**	**22.38**	**0.112**	**2.85**	**2.625**	**66.68**	**1.486**	**37.73**	**1.349**	**34.26**	**59.86**	**266.28**	**52.53**	**9.19**	**C0881-112-2625-S**	**1.615**	**41.02**	**46.15**	**205.28**	**45.68**	**7.99**
C0881-112-2750-M	**0.881**	**22.38**	**0.112**	**2.85**	**2.750**	**69.85**	**1.551**	**39.40**	**1.407**	**35.73**	**59.86**	**266.28**	**49.93**	**8.74**	**C0881-112-2750-S**	**1.687**	**42.85**	**46.15**	**205.28**	**43.42**	**7.60**
C0881-112-2875-M	**0.881**	**22.38**	**0.112**	**2.85**	**2.875**	**73.03**	**1.617**	**41.07**	**1.465**	**37.20**	**59.86**	**266.28**	**47.58**	**8.33**	**C0881-112-2875-S**	**1.760**	**44.69**	**46.15**	**205.28**	**41.37**	**7.24**
C0881-112-3000-M	**0.881**	**22.38**	**0.112**	**2.85**	**3.000**	**76.20**	**1.683**	**42.74**	**1.523**	**38.67**	**59.86**	**266.28**	**45.44**	**7.95**	**C0881-112-3000-S**	**1.832**	**46.53**	**46.15**	**205.28**	**39.51**	**6.91**
C0881-112-3250-M	**0.881**	**22.38**	**0.112**	**2.85**	**3.250**	**82.55**	**1.814**	**46.07**	**1.638**	**41.62**	**59.86**	**266.28**	**41.68**	**7.29**	**C0881-112-3250-S**	**1.977**	**50.21**	**46.15**	**205.28**	**36.25**	**6.34**
C0881-112-3500-M	**0.881**	**22.38**	**0.112**	**2.85**	**3.500**	**88.90**	**1.945**	**49.41**	**1.754**	**44.56**	**59.86**	**266.28**	**38.50**	**6.74**	**C0881-112-3500-S**	**2.122**	**53.89**	**46.15**	**205.28**	**33.48**	**5.86**
C0881-112-3750-M	**0.881**	**22.38**	**0.112**	**2.85**	**3.750**	**95.25**	**2.077**	**52.75**	**1.870**	**47.51**	**59.86**	**266.28**	**35.77**	**6.26**	**C0881-112-3750-S**	**2.266**	**57.57**	**46.15**	**205.28**	**31.11**	**5.44**
C0881-112-4000-M	**0.881**	**22.38**	**0.112**	**2.85**	**4.000**	**101.60**	**2.208**	**56.08**	**1.986**	**50.45**	**59.86**	**266.28**	**33.40**	**5.85**	**C0881-112-4000-S**	**2.411**	**61.25**	**46.15**	**205.28**	**29.05**	**5.08**
C0881-112-4250-M	**0.881**	**22.38**	**0.112**	**2.85**	**4.250**	**107.95**	**2.339**	**59.42**	**2.102**	**53.40**	**59.86**	**266.28**	**31.33**	**5.48**	**C0881-112-4250-S**	**2.556**	**64.92**	**46.15**	**205.28**	**27.24**	**4.77**
C0881-112-4500-M	**0.881**	**22.38**	**0.112**	**2.85**	**4.500**	**114.30**	**2.471**	**62.75**	**2.218**	**56.34**	**59.86**	**266.28**	**29.50**	**5.16**	**C0881-112-4500-S**	**2.701**	**68.60**	**46.15**	**205.28**	**25.65**	**4.49**
C0881-112-4750-M	**0.881**	**22.38**	**0.112**	**2.85**	**4.750**	**120.65**	**2.602**	**66.09**	**2.334**	**59.29**	**59.86**	**266.28**	**27.87**	**4.88**	**C0881-112-4750-S**	**2.846**	**72.28**	**46.15**	**205.28**	**24.23**	**4.24**
C0881-112-5000-M	**0.881**	**22.38**	**0.112**	**2.85**	**5.000**	**127.00**	**2.733**	**69.43**	**2.450**	**62.23**	**59.86**	**266.28**	**26.41**	**4.62**	**C0881-112-5000-S**	**2.991**	**75.96**	**46.15**	**205.28**	**22.97**	**4.02**
C0881-112-5250-M	**0.881**	**22.38**	**0.112**	**2.85**	**5.250**	**133.35**	**2.865**	**72.76**	**2.566**	**65.18**	**59.86**	**266.28**	**25.10**	**4.39**	**C0881-112-5250-S**	**3.135**	**79.64**	**46.15**	**205.28**	**21.82**	**3.82**
C0881-112-5500-M	**0.881**	**22.38**	**0.112**	**2.85**	**5.500**	**139.70**	**2.996**	**76.10**	**2.682**	**68.12**	**59.86**	**266.28**	**23.91**	**4.18**	**C0881-112-5500-S**	**3.280**	**83.32**	**46.15**	**205.28**	**20.79**	**3.64**
C0881-112-5750-M	**0.881**	**22.38**	**0.112**	**2.85**	**5.750**	**146.05**	**3.127**	**79.44**	**2.798**	**71.06**	**59.86**	**266.28**	**22.83**	**3.99**	**C0881-112-5750-S**	**3.425**	**86.99**	**46.15**	**205.28**	**19.85**	**3.47**
C0881-112-6000-M	**0.881**	**22.38**	**0.112**	**2.85**	**6.000**	**152.40**	**3.259**	**82.77**	**2.914**	**74.01**	**59.86**	**266.28**	**21.84**	**3.82**	**C0881-112-6000-S**	**3.570**	**90.67**	**46.15**	**205.28**	**18.99**	**3.32**
C0881-112-6250-M	**0.881**	**22.38**	**0.112**	**2.85**	**6.250**	**158.75**	**3.390**	**86.11**	**3.030**	**76.95**	**59.86**	**266.28**	**20.93**	**3.66**	**C0881-112-6250-S**	**3.715**	**94.35**	**46.15**	**205.28**	**18.20**	**3.19**
C0881-112-6500-M	**0.881**	**22.38**	**0.112**	**2.85**	**6.500**	**165.10**	**3.521**	**89.45**	**3.146**	**79.90**	**59.86**	**266.28**	**20.10**	**3.52**	**C0881-112-6500-S**	**3.859**	**98.03**	**46.15**	**205.28**	**17.48**	**3.06**
C0881-112-6750-M	**0.881**	**22.38**	**0.112**	**2.85**	**6.750**	**171.45**	**3.653**	**92.78**	**3.262**	**82.84**	**59.86**	**266.28**	**19.33**	**3.38**	**C0881-112-6750-S**	**4.004**	**101.71**	**46.15**	**205.28**	**16.81**	**2.94**
C0881-112-7000-M	**0.881**	**22.38**	**0.112**	**2.85**	**7.000**	**177.80**	**3.784**	**96.12**	**3.378**	**85.79**	**59.86**	**266.28**	**18.62**	**3.26**	**C0881-112-7000-S**	**4.149**	**105.39**	**46.15**	**205.28**	**16.19**	**2.83**
C0881-112-7500-M	**0.881**	**22.38**	**0.112**	**2.85**	**7.500**	**190.50**	**4.047**	**102.79**	**3.609**	**91.68**	**59.86**	**266.28**	**17.34**	**3.03**	**C0881-112-7500-S**	**4.439**	**112.74**	**46.15**	**205.28**	**15.07**	**2.64**
C0881-112-8000-M	**0.881**	**22.38**	**0.112**	**2.85**	**8.000**	**203.20**	**4.310**	**109.46**	**3.841**	**97.57**	**59.86**	**266.28**	**16.22**	**2.84**	**C0881-112-8000-S**	**4.728**	**120.10**	**46.15**	**205.28**	**14.11**	**2.47**
C0881-112-8500-M	**0.881**	**22.38**	**0.112**	**2.85**	**8.500**	**215.90**	**4.572**	**116.14**	**4.073**	**103.46**	**59.86**	**266.28**	**15.24**	**2.67**	**C0881-112-8500-S**	**5.018**	**127.45**	**46.15**	**205.28**	**13.25**	**2.32**
C0881-112-9000-M	**0.881**	**22.38**	**0.112**	**2.85**	**9.000**	**228.60**	**4.835**	**122.81**	**4.305**	**109.35**	**59.86**	**266.28**	**14.37**	**2.52**	**C0881-112-9000-S**	**5.308**	**134.81**	**46.15**	**205.28**	**12.50**	**2.19**
C0881-112-9500-M	**0.881**	**22.38**	**0.112**	**2.85**	**9.500**	**241.30**	**5.098**	**129.48**	**4.537**	**115.24**	**59.86**	**266.28**	**13.60**	**2.38**	**C0881-112-9500-S**	**5.597**	**142.17**	**46.15**	**205.28**	**11.82**	**2.07**
C0881-125-1250-M	**0.881**	**22.38**	**0.125**	**3.18**	**1.250**	**31.75**	**0.839**	**21.31**	**0.805**	**20.44**	**80.86**	**359.70**	**196.66**	**34.42**	**C0881-125-1250-S**	**0.889**	**22.58**	**61.75**	**274.68**	**171.01**	**29.93**
C0881-125-1375-M	**0.881**	**22.38**	**0.125**	**3.18**	**1.375**	**34.93**	**0.912**	**23.18**	**0.872**	**22.16**	**80.86**	**359.70**	**174.81**	**30.59**	**C0881-125-1375-S**	**0.969**	**24.61**	**61.75**	**274.68**	**152.01**	**26.60**
C0881-125-1500-M	**0.881**	**22.38**	**0.125**	**3.18**	**1.500**	**38.10**	**0.986**	**25.05**	**0.940**	**23.88**	**80.86**	**359.70**	**157.33**	**27.53**	**C0881-125-1500-S**	**1.049**	**26.64**	**61.75**	**274.68**	**136.81**	**23.94**
C0881-125-1625-M	**0.881**	**22.38**	**0.125**	**3.18**	**1.625**	**41.28**	**1.060**	**26.91**	**1.008**	**25.60**	**80.86**	**359.70**	**143.03**	**25.03**	**C0881-125-1625-S**	**1.128**	**28.66**	**61.75**	**274.68**	**124.37**	**21.77**
C0881-125-1750-M	**0.881**	**22.38**	**0.125**	**3.18**	**1.750**	**44.45**	**1.133**	**28.78**	**1.076**	**27.32**	**80.86**	**359.70**	**131.11**	**22.94**	**C0881-125-1750-S**	**1.208**	**30.69**	**61.75**	**274.68**	**114.01**	**19.95**
C0881-125-1875-M	**0.881**	**22.38**	**0.125**	**3.18**	**1.875**	**47.63**	**1.207**	**30.65**	**1.143**	**29.04**	**80.86**	**359.70**	**121.02**	**21.18**	**C0881-125-1875-S**	**1.288**	**32.72**	**61.75**	**274.68**	**105.24**	**18.42**
C0881-125-2000-M	**0.881**	**22.38**	**0.125**	**3.18**	**2.000**	**50.80**	**1.280**	**32.52**	**1.211**	**30.76**	**80.86**	**359.70**	**112.38**	**19.67**	**C0881-125-2000-S**	**1.368**	**34.75**	**61.75**	**274.68**	**97.72**	**17.10**
C0881-125-2125-M	**0.881**	**22.38**	**0.125**	**3.18**	**2.125**	**53.98**	**1.354**	**34.39**	**1.279**	**32.48**	**80.86**	**359.70**	**104.89**	**18.36**	**C0881-125-2125-S**	**1.448**	**36.78**	**61.75**	**274.68**	**91.21**	**15.96**
C0881-125-2250-M	**0.881**	**22.38**	**0.125**	**3.18**	**2.250**	**57.15**	**1.428**	**36.26**	**1.347**	**34.20**	**80.86**	**359.70**	**98.33**	**17.21**	**C0881-125-2250-S**	**1.528**	**38.81**	**61.75**	**274.68**	**85.51**	**14.96**
C0881-125-2375-M	**0.881**	**22.38**	**0.125**	**3.18**	**2.375**	**60.33**	**1.501**	**38.13**	**1.414**	**35.93**	**80.86**	**359.70**	**92.55**	**16.20**	**C0881-125-2375-S**	**1.608**	**40.84**	**61.75**	**274.68**	**80.48**	**14.08**
C0881-125-2500-M	**0.881**	**22.38**	**0.125**	**3.18**	**2.500**	**63.50**	**1.575**	**40.00**	**1.482**	**37.65**	**80.86**	**359.70**	**87.41**	**15.30**	**C0881-125-2500-S**	**1.688**	**42.86**	**61.75**	**274.68**	**76.01**	**13.30**
C0881-125-2625-M	**0.881**	**22.38**	**0.125**	**3.18**	**2.625**	**66.68**	**1.648**	**41.87**	**1.550**	**39.37**	**80.86**	**359.70**	**82.81**	**14.49**	**C0881-125-2625-S**	**1.767**	**44.89**	**61.75**	**274.68**	**72.01**	**12.60**
C0881-125-2750-M	**0.881**	**22.38**	**0.125**	**3.18**	**2.750**	**69.85**	**1.722**	**43.74**	**1.618**	**41.09**	**80.86**	**359.70**	**78.67**	**13.77**	**C0881-125-2750-S**	**1.847**	**46.92**	**61.75**	**274.68**	**68.41**	**11.97**
C0881-125-2875-M	**0.881**	**22.38**	**0.125**	**3.18**	**2.875**	**73.03**	**1.796**	**45.61**	**1.685**	**42.81**	**80.86**	**359.70**	**74.92**	**13.11**	**C0881-125-2875-S**	**1.927**	**48.95**	**61.75**	**274.68**	**65.15**	**11.40**
C0881-125-3000-M	**0.881**	**22.38**	**0.125**	**3.18**	**3.000**	**76.20**	**1.869**	**47.48**	**1.753**	**44.53**	**80.86**	**359.70**	**71.51**	**12.51**	**C0881-125-3000-S**	**2.007**	**50.98**	**61.75**	**274.68**	**62.19**	**10.88**
C0881-125-3250-M	**0.881**	**22.38**	**0.125**	**3.18**	**3.250**	**82.55**	**2.016**	**51.22**	**1.889**	**47.97**	**80.86**	**359.70**	**65.56**	**11.47**	**C0881-125-3250-S**	**2.167**	**55.03**	**61.75**	**274.68**	**57.00**	**9.98**
C0881-125-3500-M	**0.881**	**22.38**	**0.125**	**3.18**	**3.500**	**88.90**	**2.164**	**54.96**	**2.024**	**51.42**	**80.86**	**359.70**	**60.51**	**10.59**	**C0881-125-3500-S**	**2.326**	**59.09**	**61.75**	**274.68**	**52.62**	**9.21**
C0881-125-3750-M	**0.881**	**22.38**	**0.125**	**3.18**	**3.750**	**95.25**	**2.311**	**58.70**	**2.160**	**54.86**	**80.86**	**359.70**	**56.19**	**9.83**	**C0881-125-3750-S**	**2.486**	**63.15**	**61.75**	**274.68**	**48.86**	**8.55**
C0881-125-4000-M	**0.881**	**22.38**	**0.125**	**3.18**	**4.000**	**101.60**	**2.458**	**62.44**	**2.295**	**58.30**	**80.86**	**359.70**	**52.44**	**9.18**	**C0881-125-4000-S**	**2.646**	**67.21**	**61.75**	**274.68**	**45.60**	**7.98**
C0881-125-4250-M	**0.881**	**22.38**	**0.125**	**3.18**	**4.250**	**107.95**	**2.605**	**66.17**	**2.431**	**61.74**	**80.86**	**359.70**	**49.17**	**8.60**	**C0881-125-4250-S**	**2.806**	**71.26**	**61.75**	**274.68**	**42.75**	**7.48**
C0881-125-4500-M	**0.881**	**22.38**	**0.125**	**3.18**	**4.500**	**114.30**	**2.752**	**69.91**	**2.566**	**65.18**	**80.86**	**359.70**	**46.27**	**8.10**	**C0881-125-4500-S**	**2.965**	**75.32**	**61.75**	**274.68**	**40.24**	**7.04**
C0881-125-4750-M	**0.881**	**22.38**	**0.125**	**3.18**	**4.750**	**120.65**	**2.900**	**73.65**	**2.702**	**68.63**	**80.86**	**359.70**	**43.70**	**7.65**	**C0881-125-4750-S**	**3.125**	**79.38**	**61.75**	**274.68**	**38.00**	**6.65**
C0881-125-5000-M	**0.881**	**22.38**	**0.125**	**3.18**	**5.000**	**127.00**	**3.047**	**77.39**	**2.837**	**72.07**	**80.86**	**359.70**	**41.40**	**7.25**	**C0881-125-5000-S**	**3.285**	**83.43**	**61.75**	**274.68**	**36.00**	**6.30**
C0881-125-5250-M	**0.881**	**22.38**	**0.125**	**3.18**	**5.250**	**133.35**	**3.194**	**81.13**	**2.973**	**75.51**	**80.86**	**359.70**	**39.33**	**6.88**	**C0881-125-5250-S**	**3.445**	**87.49**	**61.75**	**274.68**	**34.20**	**5.99**
C0881-125-5500-M	**0.881**	**22.38**	**0.125**	**3.18**	**5.500**	**139.70**	**3.341**	**84.87**	**3.108**	**78.95**	**80.86**	**359.70**	**37.46**	**6.56**	**C0881-125-5500-S**	**3.604**	**91.55**	**61.75**	**274.68**	**32.57**	**5.70**
C0881-125-5750-M	**0.881**	**22.38**	**0.125**	**3.18**	**5.750**	**146.05**	**3.489**	**88.61**	**3.244**	**82.39**	**80.86**	**359.70**	**35.76**	**6.26**	**C0881-125-5750-S**	**3.764**	**95.61**	**61.75**	**274.68**	**31.09**	**5.44**
C0881-125-6000-M	**0.881**	**22.38**	**0.125**	**3.18**	**6.000**	**152.40**	**3.636**	**92.35**	**3.379**	**85.84**	**80.86**	**359.70**	**34.20**	**5.99**	**C0881-125-6000-S**	**3.924**	**99.66**	**61.75**	**274.68**	**29.74**	**5.20**
C0881-125-6250-M	**0.881**	**22.38**	**0.125**	**3.18**	**6.250**	**158.75**	**3.783**	**96.09**	**3.515**	**89.28**	**80.86**	**359.70**	**32.78**	**5.74**	**C0881-125-6250-S**	**4.083**	**103.72**	**61.75**	**274.68**	**28.50**	**4.99**
C0881-125-6500-M	**0.881**	**22.38**	**0.125**	**3.18**	**6.500**	**165.10**	**3.930**	**99.83**	**3.650**	**92.72**	**80.86**	**359.70**	**31.47**	**5.51**	**C0881-125-6500-S**	**4.243**	**107.78**	**61.75**	**274.68**	**27.36**	**4.79**
C0881-125-6750-M	**0.881**	**22.38**	**0.125**	**3.18**	**6.750**	**171.45**	**4.077**	**103.56**	**3.786**	**96.16**	**80.86**	**359.70**	**30.26**	**5.29**	**C0881-125-6750-S**	**4.403**	**111.83**	**61.75**	**274.68**	**26.31**	**4.60**
C0881-125-7000-M	**0.881**	**22.38**	**0.125**	**3.18**	**7.000**	**177.80**	**4.225**	**107.30**	**3.921**	**99.61**	**80.86**	**359.70**	**29.14**	**5.10**	**C0881-125-7000-S**	**4.563**	**115.89**	**61.75**	**274.68**	**25.34**	**4.43**
C0881-125-7500-M	**0.881**	**22.38**	**0.125**	**3.18**	**7.500**	**190.50**	**4.519**	**114.78**	**4.193**	**106.49**	**80.86**	**359.70**	**27.13**	**4.75**	**C0881-125-7500-S**	**4.882**	**124.00**	**61.75**	**274.68**	**23.59**	**4.13**
C0881-125-8000-M	**0.881**	**22.38**	**0.125**	**3.18**	**8.000**	**203.20**	**4.813**	**122.26**	**4.464**	**113.37**	**80.86**	**359.70**	**25.38**	**4.44**	**C0881-125-8000-S**	**5.202**	**132.12**	**61.75**	**274.68**	**22.07**	**3.86**
C0881-125-8500-M	**0.881**	**22.38**	**0.125**	**3.18**	**8.500**	**215.90**	**5.108**	**129.74**	**4.735**	**120.26**	**80.86**	**359.70**	**23.84**	**4.17**	**C0881-125-8500-S**	**5.521**	**140.23**	**61.75**	**274.68**	**20.73**	**3.63**

FOR INFORMATION ON ALTERNATIVE FINISHES, SEE PAGE 311

Part Numbers with an "*" are squared and not ground. **Part Numbers in bold** represent the newly expanded Associated Spring RAYMOND compression spring offering.

MUSIC WIRE																STAINLESS STEEL						
Catalog #	Outside Diameter (OD)		Wire Diameter (d)		Free Length (L) Approx		Load Length (L_1)		Solid Height (Sh) Approx		Load (P) at L_1		Spring Rate (R)		Catalog #	Load Length (L_1)		Load (P) at L_1		Spring Rate (R)	
	in	mm	in	mm	in	mm	in	mm	in	mm	lb	N	lb/in	N/mm		in	mm	lb	N	lb/in	N/mm
C0881-125-9000-M	0.881	22.38	0.125	3.18	9.000	228.60	5.402	137.22	5.006	127.14	80.86	359.70	22.48	3.93	**C0881-125-9000-S**	5.840	148.35	61.75	274.68	19.54	3.42
C0881-125-9500-M	0.881	22.38	0.125	3.18	9.500	241.30	5.697	144.69	5.277	134.03	80.86	359.70	21.26	3.72	**C0881-125-9500-S**	6.160	156.46	61.75	274.68	18.49	3.24
C0881-135-1250-M	0.881	22.38	0.135	3.43	1.250	31.75	0.891	22.64	0.870	22.09	99.72	443.59	278.14	48.68	**C0881-135-1250-S**	0.937	23.81	75.58	336.21	241.86	42.33
C0881-135-1375-M	0.881	22.38	0.135	3.43	1.375	34.93	0.971	24.66	0.944	23.99	99.72	443.59	246.68	43.17	**C0881-135-1375-S**	1.023	25.97	75.58	336.21	214.50	37.54
C0881-135-1500-M	0.881	22.38	0.135	3.43	1.500	38.10	1.050	26.67	1.019	25.89	99.72	443.59	221.61	38.78	**C0881-135-1500-S**	1.108	28.14	75.58	336.21	192.70	33.72
C0881-135-1625-M	0.881	22.38	0.135	3.43	1.625	41.28	1.129	28.68	1.094	27.78	99.72	443.59	201.17	35.20	**C0881-135-1625-S**	1.193	30.30	75.58	336.21	174.93	30.61
C0881-135-1750-M	0.881	22.38	0.135	3.43	1.750	44.45	1.209	30.70	1.169	29.68	99.72	443.59	184.18	32.23	**C0881-135-1750-S**	1.278	32.46	75.58	336.21	160.15	28.03
C0881-135-1875-M	0.881	22.38	0.135	3.43	1.875	47.63	1.288	32.71	1.243	31.58	99.72	443.59	169.83	29.72	**C0881-135-1875-S**	1.363	34.63	75.58	336.21	147.68	25.84
C0881-135-2000-M	0.881	22.38	0.135	3.43	2.000	50.80	1.367	34.72	1.318	33.48	99.72	443.59	157.56	27.57	**C0881-135-2000-S**	1.448	36.79	75.58	336.21	137.01	23.98
C0881-135-2125-M	0.881	22.38	0.135	3.43	2.125	53.98	1.446	36.74	1.393	35.38	99.72	443.59	146.94	25.72	**C0881-135-2125-S**	1.533	38.95	75.58	336.21	127.78	22.36
C0881-135-2250-M	0.881	22.38	0.135	3.43	2.250	57.15	1.526	38.75	1.468	37.28	99.72	443.59	137.67	24.09	**C0881-135-2250-S**	1.619	41.11	75.58	336.21	119.71	20.95
C0881-135-2375-M	0.881	22.38	0.135	3.43	2.375	60.33	1.605	40.76	1.542	39.18	99.72	443.59	129.49	22.66	**C0881-135-2375-S**	1.704	43.28	75.58	336.21	112.60	19.71
C0881-135-2500-M	0.881	22.38	0.135	3.43	2.500	63.50	1.684	42.78	1.617	41.08	99.72	443.59	122.23	21.39	**C0881-135-2500-S**	1.789	45.44	75.58	336.21	106.29	18.60
C0881-135-2625-M	0.881	22.38	0.135	3.43	2.625	66.68	1.763	44.79	1.692	42.98	99.72	443.59	115.75	20.26	**C0881-135-2625-S**	1.874	47.60	75.58	336.21	100.65	17.61
C0881-135-2750-M	0.881	22.38	0.135	3.43	2.750	69.85	1.843	46.80	1.767	44.87	99.72	443.59	109.91	19.23	**C0881-135-2750-S**	1.959	49.76	75.58	336.21	95.58	16.73
C0881-135-2875-M	0.881	22.38	0.135	3.43	2.875	73.03	1.922	48.82	1.841	46.77	99.72	443.59	104.64	18.31	**C0881-135-2875-S**	2.044	51.93	75.58	336.21	90.99	15.92
C0881-135-3000-M	0.881	22.38	0.135	3.43	3.000	76.20	2.001	50.83	1.916	48.67	99.72	443.59	99.85	17.47	**C0881-135-3000-S**	2.129	54.09	75.58	336.21	86.82	15.19
C0881-135-3250-M	0.881	22.38	0.135	3.43	3.250	82.55	2.160	54.86	2.066	52.47	99.72	443.59	91.47	16.01	**C0881-135-3250-S**	2.300	58.41	75.58	336.21	79.54	13.92
C0881-135-3500-M	0.881	22.38	0.135	3.43	3.500	88.90	2.318	58.89	2.215	56.27	99.72	443.59	84.39	14.77	**C0881-135-3500-S**	2.470	62.74	75.58	336.21	73.38	12.84
C0881-135-3750-M	0.881	22.38	0.135	3.43	3.750	95.25	2.477	62.91	2.365	60.07	99.72	443.59	78.33	13.71	**C0881-135-3750-S**	2.640	67.06	75.58	336.21	68.11	11.92
C0881-135-4000-M	0.881	22.38	0.135	3.43	4.000	101.60	2.635	66.94	2.514	63.86	99.72	443.59	73.08	12.79	**C0881-135-4000-S**	2.811	71.39	75.58	336.21	63.55	11.12
C0881-135-4250-M	0.881	22.38	0.135	3.43	4.250	107.95	2.794	70.97	2.664	67.66	99.72	443.59	68.49	11.99	**C0881-135-4250-S**	2.981	75.71	75.58	336.21	59.55	10.42
C0881-135-4500-M	0.881	22.38	0.135	3.43	4.500	114.30	2.952	74.99	2.813	71.46	99.72	443.59	64.44	11.28	**C0881-135-4500-S**	3.151	80.04	75.58	336.21	56.04	9.81
C0881-135-4750-M	0.881	22.38	0.135	3.43	4.750	120.65	3.111	79.02	2.963	75.26	99.72	443.59	60.84	10.65	**C0881-135-4750-S**	3.321	84.36	75.58	336.21	52.91	9.26
C0881-135-5000-M	0.881	22.38	0.135	3.43	5.000	127.00	3.270	83.05	3.112	79.05	99.72	443.59	57.63	10.08	**C0881-135-5000-S**	3.492	88.69	75.58	336.21	50.11	8.77
C0881-135-5250-M	0.881	22.38	0.135	3.43	5.250	133.35	3.428	87.07	3.262	82.85	99.72	443.59	54.74	9.58	**C0881-135-5250-S**	3.662	93.01	75.58	336.21	47.60	8.33
C0881-135-5500-M	0.881	22.38	0.135	3.43	5.500	139.70	3.587	91.10	3.411	86.65	99.72	443.59	52.12	9.12	**C0881-135-5500-S**	3.832	97.34	75.58	336.21	45.32	7.93
C0881-135-5750-M	0.881	22.38	0.135	3.43	5.750	146.05	3.745	95.13	3.561	90.45	99.72	443.59	49.74	8.70	**C0881-135-5750-S**	4.003	101.66	75.58	336.21	43.25	7.57
C0881-135-6000-M	0.881	22.38	0.135	3.43	6.000	152.40	3.904	99.15	3.710	94.25	99.72	443.59	47.57	8.32	**C0881-135-6000-S**	4.173	105.99	75.58	336.21	41.37	7.24
C0881-135-6250-M	0.881	22.38	0.135	3.43	6.250	158.75	4.062	103.18	3.860	98.04	99.72	443.59	45.58	7.98	**C0881-135-6250-S**	4.343	110.31	75.58	336.21	39.64	6.94
C0881-135-6500-M	0.881	22.38	0.135	3.43	6.500	165.10	4.221	107.21	4.010	101.84	99.72	443.59	43.75	7.66	**C0881-135-6500-S**	4.513	114.64	75.58	336.21	38.05	6.66
C0881-135-6750-M	0.881	22.38	0.135	3.43	6.750	171.45	4.379	111.23	4.159	105.64	99.72	443.59	42.07	7.36	**C0881-135-6750-S**	4.684	118.96	75.58	336.21	36.58	6.40
C0881-135-7000-M	0.881	22.38	0.135	3.43	7.000	177.80	4.538	115.26	4.309	109.44	99.72	443.59	40.50	7.09	**C0881-135-7000-S**	4.854	123.29	75.58	336.21	35.22	6.16
C0881-135-7500-M	0.881	22.38	0.135	3.43	7.500	190.50	4.855	123.32	4.608	117.03	99.72	443.59	37.70	6.60	**C0881-135-7500-S**	5.194	131.94	75.58	336.21	32.78	5.74
C0881-135-8000-M	0.881	22.38	0.135	3.43	8.000	203.20	5.172	131.37	4.907	124.63	99.72	443.59	35.26	6.17	**C0881-135-8000-S**	5.535	140.59	75.58	336.21	30.66	5.37
C0881-135-8500-M	0.881	22.38	0.135	3.43	8.500	215.90	5.489	139.42	5.206	132.22	99.72	443.59	33.12	5.80	**C0881-135-8500-S**	5.876	149.24	75.58	336.21	28.80	5.04
C0881-135-9000-M	0.881	22.38	0.135	3.43	9.000	228.60	5.806	147.48	5.505	139.82	99.72	443.59	31.22	5.46	**C0881-135-9000-S**	6.216	157.89	75.58	336.21	27.15	4.75
C0881-135-9500-M	0.881	22.38	0.135	3.43	9.500	241.30	6.123	155.53	5.804	147.41	99.72	443.59	29.53	5.17	**C0881-135-9500-S**	6.557	166.54	75.58	336.21	25.68	4.49
C0881-148-1250-M	0.881	22.38	0.148	3.76	1.250	31.75	0.952	24.18	0.945	23.99	127.90	568.95	429.41	75.15	**C0881-148-1250-S**	0.993	25.22	95.99	426.99	373.40	65.35
C0881-148-1375-M	0.881	22.38	0.148	3.76	1.375	34.93	1.038	26.37	1.028	26.10	127.90	568.95	379.66	66.44	**C0881-148-1375-S**	1.084	27.54	95.99	426.99	330.14	57.78
C0881-148-1625-M	0.881	22.38	0.148	3.76	1.625	41.28	1.210	30.74	1.194	30.32	127.90	568.95	308.25	53.94	**C0881-148-1625-S**	1.267	32.18	95.99	426.99	268.04	46.91
C0881-148-1750-M	0.881	22.38	0.148	3.76	1.750	44.45	1.296	32.92	1.277	32.43	127.90	568.95	281.75	49.31	**C0881-148-1750-S**	1.358	34.50	95.99	426.99	245.00	42.87
C0881-148-1875-M	0.881	22.38	0.148	3.76	1.875	47.63	1.382	35.10	1.360	34.54	127.90	568.95	259.44	45.40	**C0881-148-1875-S**	1.450	36.82	95.99	426.99	225.60	39.48
C0881-148-2000-M	0.881	22.38	0.148	3.76	2.000	50.80	1.468	37.29	1.443	36.65	127.90	568.95	240.41	42.07	**C0881-148-2000-S**	1.541	39.14	95.99	426.99	209.05	36.58
C0881-148-2125-M	0.881	22.38	0.148	3.76	2.125	53.98	1.554	39.47	1.526	38.76	127.90	568.95	223.98	39.20	**C0881-148-2125-S**	1.632	41.46	95.99	426.99	194.76	34.08
C0881-148-2250-M	0.881	22.38	0.148	3.76	2.250	57.15	1.640	41.65	1.609	40.87	127.90	568.95	209.65	36.69	**C0881-148-2250-S**	1.723	43.78	95.99	426.99	182.31	31.90
C0881-148-2375-M	0.881	22.38	0.148	3.76	2.375	60.33	1.726	43.84	1.692	42.97	127.90	568.95	197.05	34.48	**C0881-148-2375-S**	1.815	46.10	95.99	426.99	171.34	29.99
C0881-148-2500-M	0.881	22.38	0.148	3.76	2.500	63.50	1.812	46.02	1.775	45.08	127.90	568.95	185.87	32.53	**C0881-148-2500-S**	1.906	48.41	95.99	426.99	161.63	28.28
C0881-148-2625-M	0.881	22.38	0.148	3.76	2.625	66.68	1.898	48.20	1.858	47.19	127.90	568.95	175.89	30.78	**C0881-148-2625-S**	1.997	50.73	95.99	426.99	152.95	26.77
C0881-148-2750-M	0.881	22.38	0.148	3.76	2.750	69.85	1.984	50.39	1.941	49.30	127.90	568.95	166.94	29.21	**C0881-148-2750-S**	2.089	53.05	95.99	426.99	145.16	25.40
C0881-148-2875-M	0.881	22.38	0.148	3.76	2.875	73.03	2.070	52.57	2.024	51.41	127.90	568.95	158.84	27.80	**C0881-148-2875-S**	2.180	55.37	95.99	426.99	138.13	24.17
C0881-148-3000-M	0.881	22.38	0.148	3.76	3.000	76.20	2.156	54.76	2.107	53.52	127.90	568.95	151.50	26.51	**C0881-148-3000-S**	2.271	57.69	95.99	426.99	131.74	23.05
C0881-148-3250-M	0.881	22.38	0.148	3.76	3.250	82.55	2.328	59.12	2.273	57.74	127.90	568.95	138.68	24.27	**C0881-148-3250-S**	2.454	62.33	95.99	426.99	120.59	21.10
C0881-148-3500-M	0.881	22.38	0.148	3.76	3.500	88.90	2.500	63.49	2.439	61.96	127.90	568.95	127.86	22.38	**C0881-148-3500-S**	2.637	66.97	95.99	426.99	111.18	19.46
C0881-148-3750-M	0.881	22.38	0.148	3.76	3.750	95.25	2.672	67.86	2.605	66.18	127.90	568.95	118.60	20.76	**C0881-148-3750-S**	2.819	71.61	95.99	426.99	103.13	18.05
C0881-148-4000-M	0.881	22.38	0.148	3.76	4.000	101.60	2.844	72.23	2.771	70.39	127.90	568.95	110.60	19.35	**C0881-148-4000-S**	3.002	76.25	95.99	426.99	96.17	16.83
C0881-148-4250-M	0.881	22.38	0.148	3.76	4.250	107.95	3.015	76.59	2.937	74.61	127.90	568.95	103.61	18.13	**C0881-148-4250-S**	3.185	80.89	95.99	426.99	90.09	15.77
C0881-148-4500-M	0.881	22.38	0.148	3.76	4.500	114.30	3.187	80.96	3.104	78.83	127.90	568.95	97.45	17.05	**C0881-148-4500-S**	3.367	85.53	95.99	426.99	84.74	14.83
C0881-148-4750-M	0.881	22.38	0.148	3.76	4.750	120.65	3.359	85.33	3.270	83.05	127.90	568.95	91.98	16.10	**C0881-148-4750-S**	3.550	90.16	95.99	426.99	79.98	14.00
C0881-148-5000-M	0.881	22.38	0.148	3.76	5.000	127.00	3.531	89.70	3.436	87.27	127.90	568.95	87.09	15.24	**C0881-148-5000-S**	3.732	94.80	95.99	426.99	75.73	13.25
C0881-148-5250-M	0.881	22.38	0.148	3.76	5.250	133.35	3.703	94.06	3.602	91.49	127.90	568.95	82.69	14.47	**C0881-148-5250-S**	3.915	99.44	95.99	426.99	71.91	12.58
C0881-148-5500-M	0.881	22.38	0.148	3.76	5.500	139.70	3.875	98.43	3.768	95.70	127.90	568.95	78.72	13.78	**C0881-148-5500-S**	4.098	104.08	95.99	426.99	68.45	11.98
C0881-148-5750-M	0.881	22.38	0.148	3.76	5.750	146.05	4.047	102.80	3.934	99.92	127.90	568.95	75.11	13.14	**C0881-148-5750-S**	4.280	108.72	95.99	426.99	65.31	11.43
C0881-148-6250-M	0.881	22.38	0.148	3.76	6.250	158.75	4.391	111.53	4.266	108.36	127.90	568.95	68.80	12.04	**C0881-148-6250-S**	4.646	118.00	95.99	426.99	59.83	10.47

Part Numbers with an "*" are squared and not ground. **Part Numbers in bold** represent the newly expanded Associated Spring RAYMOND compression spring offering.

MUSIC WIRE															STAINLESS STEEL						
Catalog #	Outside Diameter (OD)		Wire Diameter (d)		Free Length (L) Approx		Load Length (L_1)		Solid Height (Sh) Approx		Load (P) at L_1		Spring Rate (R)		Catalog #	Load Length (L_1)		Load (P) at L_1		Spring Rate (R)	
	in	mm	in	mm	in	mm	in	mm	in	mm	lb	N	lb/in	N/mm		in	mm	lb	N	lb/in	N/mm
C0881-148-6500-M	**0.881**	**22.38**	**0.148**	**3.76**	**6.500**	**165.10**	**4.563**	**115.90**	**4.432**	**112.58**	**127.90**	**568.95**	**66.03**	**11.56**	**C0881-148-6500-S**	**4.828**	**122.64**	**95.99**	**426.99**	**57.42**	**10.05**
C0881-148-6750-M	**0.881**	**22.38**	**0.148**	**3.76**	**6.750**	**171.45**	**4.735**	**120.27**	**4.598**	**116.80**	**127.90**	**568.95**	**63.47**	**11.11**	**C0881-148-6750-S**	**5.011**	**127.28**	**95.99**	**426.99**	**55.19**	**9.66**
C0881-148-7000-M	**0.881**	**22.38**	**0.148**	**3.76**	**7.000**	**177.80**	**4.907**	**124.63**	**4.764**	**121.01**	**127.90**	**568.95**	**61.11**	**10.69**	**C0881-148-7000-S**	**5.193**	**131.91**	**95.99**	**426.99**	**53.14**	**9.30**
C0881-148-7500-M	**0.881**	**22.38**	**0.148**	**3.76**	**7.500**	**190.50**	**5.251**	**133.37**	**5.097**	**129.45**	**127.90**	**568.95**	**56.87**	**9.95**	**C0881-148-7500-S**	**5.559**	**141.19**	**95.99**	**426.99**	**49.45**	**8.65**
C0881-148-8000-M	**0.881**	**22.38**	**0.148**	**3.76**	**8.000**	**203.20**	**5.595**	**142.10**	**5.429**	**137.89**	**127.90**	**568.95**	**53.18**	**9.31**	**C0881-148-8000-S**	**5.924**	**150.47**	**95.99**	**426.99**	**46.24**	**8.09**
C0881-148-8500-M	**0.881**	**22.38**	**0.148**	**3.76**	**8.500**	**215.90**	**5.939**	**150.84**	**5.761**	**146.32**	**127.90**	**568.95**	**49.93**	**8.74**	**C0881-148-8500-S**	**6.289**	**159.75**	**95.99**	**426.99**	**43.42**	**7.60**
C0881-148-9000-M	**0.881**	**22.38**	**0.148**	**3.76**	**9.000**	**228.60**	**6.282**	**159.57**	**6.093**	**154.76**	**127.90**	**568.95**	**47.07**	**8.24**	**C0881-148-9000-S**	**6.655**	**169.03**	**95.99**	**426.99**	**40.93**	**7.16**
C0881-148-9500-M	**0.881**	**22.38**	**0.148**	**3.76**	**9.500**	**241.30**	**6.626**	**168.31**	**6.425**	**163.20**	**127.90**	**568.95**	**44.51**	**7.79**	**C0881-148-9500-S**	**7.020**	**178.30**	**95.99**	**426.99**	**38.70**	**6.77**
C0881-162-1375-M	**0.881**	**22.38**	**0.162**	**4.12**	**1.375**	**34.93**	**1.145**	**29.08**	**1.104**	**28.05**	**136.53**	**607.33**	**593.08**	**103.79**	**C0881-162-1375-S**	**1.140**	**28.96**	**121.05**	**538.46**	**515.72**	**90.25**
C0881-162-1500-M	**0.881**	**22.38**	**0.162**	**4.12**	**1.500**	**38.10**	**1.241**	**31.52**	**1.195**	**30.35**	**137.40**	**611.19**	**530.04**	**92.76**	**C0881-162-1500-S**	**1.237**	**31.43**	**121.05**	**538.46**	**460.90**	**80.66**
C0881-162-1625-M	**0.881**	**22.38**	**0.162**	**4.12**	**1.625**	**41.28**	**1.337**	**33.95**	**1.286**	**32.66**	**138.10**	**614.31**	**479.11**	**83.84**	**C0881-162-1625-S**	**1.334**	**33.89**	**121.05**	**538.46**	**416.62**	**72.91**
C0881-162-1750-M	**0.881**	**22.38**	**0.162**	**4.12**	**1.750**	**44.45**	**1.377**	**34.98**	**1.377**	**34.97**	**163.04**	**725.23**	**437.11**	**76.49**	**C0881-162-1750-S**	**1.432**	**36.36**	**121.05**	**538.46**	**380.10**	**66.52**
C0881-162-1875-M	**0.881**	**22.38**	**0.162**	**4.12**	**1.875**	**47.63**	**1.469**	**37.32**	**1.468**	**37.28**	**163.04**	**725.23**	**401.89**	**70.33**	**C0881-162-1875-S**	**1.529**	**38.83**	**121.05**	**538.46**	**349.47**	**61.16**
C0881-162-2000-M	**0.881**	**22.38**	**0.162**	**4.12**	**2.000**	**50.80**	**1.562**	**39.67**	**1.558**	**39.59**	**163.04**	**725.23**	**371.91**	**65.08**	**C0881-162-2000-S**	**1.626**	**41.29**	**121.05**	**538.46**	**323.40**	**56.60**
C0881-162-2125-M	**0.881**	**22.38**	**0.162**	**4.12**	**2.125**	**53.98**	**1.654**	**42.01**	**1.649**	**41.89**	**163.04**	**725.23**	**346.10**	**60.57**	**C0881-162-2125-S**	**1.723**	**43.76**	**121.05**	**538.46**	**300.96**	**52.67**
C0881-162-2250-M	**0.881**	**22.38**	**0.162**	**4.12**	**2.250**	**57.15**	**1.746**	**44.35**	**1.740**	**44.20**	**163.04**	**725.23**	**323.64**	**56.64**	**C0881-162-2250-S**	**1.820**	**46.22**	**121.05**	**538.46**	**281.42**	**49.25**
C0881-162-2375-M	**0.881**	**22.38**	**0.162**	**4.12**	**2.375**	**60.33**	**1.839**	**46.70**	**1.831**	**46.51**	**163.04**	**725.23**	**303.91**	**53.18**	**C0881-162-2375-S**	**1.917**	**48.69**	**121.05**	**538.46**	**264.27**	**46.25**
C0881-162-2500-M	**0.881**	**22.38**	**0.162**	**4.12**	**2.500**	**63.50**	**1.931**	**49.04**	**1.922**	**48.82**	**163.04**	**725.23**	**286.46**	**50.13**	**C0881-162-2500-S**	**2.014**	**51.16**	**121.05**	**538.46**	**249.09**	**43.59**
C0881-162-2625-M	**0.881**	**22.38**	**0.162**	**4.12**	**2.625**	**66.68**	**2.023**	**51.39**	**2.013**	**51.12**	**163.04**	**725.23**	**270.89**	**47.41**	**C0881-162-2625-S**	**2.111**	**53.62**	**121.05**	**538.46**	**235.56**	**41.22**
C0881-162-2750-M	**0.881**	**22.38**	**0.162**	**4.12**	**2.750**	**69.85**	**2.115**	**53.73**	**2.104**	**53.43**	**163.04**	**725.23**	**256.94**	**44.96**	**C0881-162-2750-S**	**2.208**	**56.09**	**121.05**	**538.46**	**223.42**	**39.10**
C0881-162-2875-M	**0.881**	**22.38**	**0.162**	**4.12**	**2.875**	**73.03**	**2.208**	**56.08**	**2.195**	**55.74**	**163.04**	**725.23**	**244.35**	**42.76**	**C0881-162-2875-S**	**2.305**	**58.55**	**121.05**	**538.46**	**212.47**	**37.18**
C0881-162-3000-M	**0.881**	**22.38**	**0.162**	**4.12**	**3.000**	**76.20**	**2.300**	**58.42**	**2.285**	**58.05**	**163.04**	**725.23**	**232.93**	**40.76**	**C0881-162-3000-S**	**2.402**	**61.02**	**121.05**	**538.46**	**202.55**	**35.45**
C0881-162-3250-M	**0.881**	**22.38**	**0.162**	**4.12**	**3.250**	**82.55**	**2.485**	**63.11**	**2.467**	**62.66**	**163.04**	**725.23**	**213.03**	**37.28**	**C0881-162-3250-S**	**2.597**	**65.95**	**121.05**	**538.46**	**185.24**	**32.42**
C0881-162-3500-M	**0.881**	**22.38**	**0.162**	**4.12**	**3.500**	**88.90**	**2.669**	**67.80**	**2.649**	**67.28**	**163.04**	**725.23**	**196.26**	**34.35**	**C0881-162-3500-S**	**2.791**	**70.88**	**121.05**	**538.46**	**170.66**	**29.87**
C0881-162-3750-M	**0.881**	**22.38**	**0.162**	**4.12**	**3.750**	**95.25**	**2.854**	**72.49**	**2.831**	**71.90**	**163.04**	**725.23**	**181.94**	**31.84**	**C0881-162-3750-S**	**2.985**	**75.82**	**121.05**	**538.46**	**158.21**	**27.69**
C0881-162-4000-M	**0.881**	**22.38**	**0.162**	**4.12**	**4.000**	**101.60**	**3.038**	**77.18**	**3.012**	**76.51**	**163.04**	**725.23**	**169.57**	**29.67**	**C0881-162-4000-S**	**3.179**	**80.75**	**121.05**	**538.46**	**147.45**	**25.80**
C0881-162-4250-M	**0.881**	**22.38**	**0.162**	**4.12**	**4.250**	**107.95**	**3.223**	**81.87**	**3.194**	**81.13**	**163.04**	**725.23**	**158.77**	**27.78**	**C0881-162-4250-S**	**3.373**	**85.68**	**121.05**	**538.46**	**138.06**	**24.16**
C0881-162-4500-M	**0.881**	**22.38**	**0.162**	**4.12**	**4.500**	**114.30**	**3.408**	**86.56**	**3.376**	**85.74**	**163.04**	**725.23**	**149.26**	**26.12**	**C0881-162-4500-S**	**3.567**	**90.61**	**121.05**	**538.46**	**129.80**	**22.71**
C0881-162-4750-M	**0.881**	**22.38**	**0.162**	**4.12**	**4.750**	**120.65**	**3.592**	**91.25**	**3.557**	**90.36**	**163.04**	**725.23**	**140.83**	**24.65**	**C0881-162-4750-S**	**3.762**	**95.54**	**121.05**	**538.46**	**122.46**	**21.43**
C0881-162-5000-M	**0.881**	**22.38**	**0.162**	**4.12**	**5.000**	**127.00**	**3.777**	**95.93**	**3.739**	**94.97**	**163.04**	**725.23**	**133.30**	**23.33**	**C0881-162-5000-S**	**3.956**	**100.47**	**121.05**	**538.46**	**115.92**	**20.29**
C0881-162-5250-M	**0.881**	**22.38**	**0.162**	**4.12**	**5.250**	**133.35**	**3.962**	**100.62**	**3.921**	**99.59**	**163.04**	**725.23**	**126.54**	**22.14**	**C0881-162-5250-S**	**4.150**	**105.41**	**121.05**	**538.46**	**110.03**	**19.26**
C0881-162-5500-M	**0.881**	**22.38**	**0.162**	**4.12**	**5.500**	**139.70**	**4.146**	**105.31**	**4.103**	**104.21**	**163.04**	**725.23**	**120.43**	**21.07**	**C0881-162-5500-S**	**4.344**	**110.34**	**121.05**	**538.46**	**104.72**	**18.33**
C0881-162-5750-M	**0.881**	**22.38**	**0.162**	**4.12**	**5.750**	**146.05**	**4.331**	**110.00**	**4.284**	**108.82**	**163.04**	**725.23**	**114.88**	**20.10**	**C0881-162-5750-S**	**4.538**	**115.27**	**121.05**	**538.46**	**99.89**	**17.48**
C0881-162-6000-M	**0.881**	**22.38**	**0.162**	**4.12**	**6.000**	**152.40**	**4.515**	**114.69**	**4.466**	**113.44**	**163.04**	**725.23**	**109.82**	**19.22**	**C0881-162-6000-S**	**4.732**	**120.20**	**121.05**	**538.46**	**95.49**	**16.71**
C0881-162-6250-M	**0.881**	**22.38**	**0.162**	**4.12**	**6.250**	**158.75**	**4.700**	**119.38**	**4.648**	**118.05**	**163.04**	**725.23**	**105.19**	**18.41**	**C0881-162-6250-S**	**4.927**	**125.13**	**121.05**	**538.46**	**91.47**	**16.01**
C0881-162-6500-M	**0.881**	**22.38**	**0.162**	**4.12**	**6.500**	**165.10**	**4.885**	**124.07**	**4.829**	**122.67**	**163.04**	**725.23**	**100.93**	**17.66**	**C0881-162-6500-S**	**5.121**	**130.07**	**121.05**	**538.46**	**87.76**	**15.36**
C0881-162-6750-M	**0.881**	**22.38**	**0.162**	**4.12**	**6.750**	**171.45**	**5.069**	**128.76**	**5.011**	**127.28**	**163.04**	**725.23**	**97.00**	**16.98**	**C0881-162-6750-S**	**5.315**	**135.00**	**121.05**	**538.46**	**84.35**	**14.76**
C0881-162-7000-M	**0.881**	**22.38**	**0.162**	**4.12**	**7.000**	**177.80**	**5.254**	**133.45**	**5.193**	**131.90**	**163.04**	**725.23**	**93.37**	**16.34**	**C0881-162-7000-S**	**5.509**	**139.93**	**121.05**	**538.46**	**81.19**	**14.21**
C0881-162-7500-M	**0.881**	**22.38**	**0.162**	**4.12**	**7.500**	**190.50**	**5.623**	**142.82**	**5.556**	**141.13**	**163.04**	**725.23**	**86.86**	**15.20**	**C0881-162-7500-S**	**5.897**	**149.79**	**121.05**	**538.46**	**75.53**	**13.22**
C0881-162-8000-M	**0.881**	**22.38**	**0.162**	**4.12**	**8.000**	**203.20**	**5.992**	**152.20**	**5.920**	**150.36**	**163.04**	**725.23**	**81.20**	**14.21**	**C0881-162-8000-S**	**6.286**	**159.66**	**121.05**	**538.46**	**70.61**	**12.36**
C0881-162-8500-M	**0.881**	**22.38**	**0.162**	**4.12**	**8.500**	**215.90**	**6.361**	**161.58**	**6.283**	**159.60**	**163.04**	**725.23**	**76.24**	**13.34**	**C0881-162-8500-S**	**6.674**	**169.52**	**121.05**	**538.46**	**66.29**	**11.60**
C0881-162-9000-M	**0.881**	**22.38**	**0.162**	**4.12**	**9.000**	**228.60**	**6.731**	**170.96**	**6.647**	**168.83**	**163.04**	**725.23**	**71.85**	**12.57**	**C0881-162-9000-S**	**7.062**	**179.38**	**121.05**	**538.46**	**62.47**	**10.93**
C0881-162-9500-M	**0.881**	**22.38**	**0.162**	**4.12**	**9.500**	**241.30**	**7.100**	**180.34**	**7.010**	**178.06**	**163.04**	**725.23**	**67.93**	**11.89**	**C0881-162-9500-S**	**7.451**	**189.25**	**121.05**	**538.46**	**59.07**	**10.34**
D13040	0.886	22.50	0.098	2.50	1.417	36.00	0.610	15.50	0.541	13.75	65.70	292.24	81.26	14.22	D23040	0.610	15.50	54.73	243.44	67.71	11.85
D13050	0.886	22.50	0.098	2.50	2.126	54.00	0.862	21.90	0.738	18.75	65.70	292.24	51.71	9.05	D23050	0.862	21.90	54.73	243.44	43.09	7.54
D13060	0.886	22.50	0.098	2.50	3.209	81.50	1.240	31.50	1.033	26.25	65.70	292.24	33.43	5.85	D23060	1.240	31.50	54.73	243.44	27.83	4.87
D13070	0.886	22.50	0.098	2.50	4.724	120.00	1.744	44.30	1.427	36.25	65.70	292.24	22.74	3.98	D23070	1.744	44.30	54.73	243.44	18.97	3.32
D13080	0.886	22.50	0.098	2.50	6.890	175.00	2.504	63.60	2.018	51.25	65.70	292.24	15.37	2.69	D23080	2.504	63.60	54.73	243.44	12.80	2.24
C0906-105-0875-M	**0.906**	**23.01**	**0.105**	**2.67**	**0.875**	**22.23**	**0.521**	**13.23**	**0.460**	**11.69**	**51.07**	**227.19**	**144.30**	**25.25**	**C0906-105-0875-S**	**0.560**	**14.23**	**37.84**	**168.31**	**120.20**	**21.04**
C0906-105-1000-M	**0.906**	**23.01**	**0.105**	**2.67**	**1.000**	**25.40**	**0.580**	**14.72**	**0.514**	**13.07**	**51.07**	**227.19**	**121.47**	**21.26**	**C0906-105-1000-S**	**0.626**	**15.90**	**37.84**	**168.31**	**101.19**	**17.71**
C0906-105-1250-M	**0.906**	**23.01**	**0.105**	**2.67**	**1.250**	**31.75**	**0.696**	**17.69**	**0.623**	**15.82**	**51.07**	**227.19**	**92.27**	**16.15**	**C0906-105-1250-S**	**0.758**	**19.25**	**37.84**	**168.31**	**76.86**	**13.45**
C0906-105-1500-M	**0.906**	**23.01**	**0.105**	**2.67**	**1.500**	**38.10**	**0.813**	**20.66**	**0.724**	**18.40**	**51.07**	**227.19**	**74.39**	**13.02**	**C0906-105-1500-S**	**0.889**	**22.59**	**37.84**	**168.31**	**61.97**	**10.84**
C0906-105-1750-M	**0.906**	**23.01**	**0.105**	**2.67**	**1.750**	**44.45**	**0.930**	**23.63**	**0.822**	**20.88**	**51.07**	**227.19**	**62.31**	**10.90**	**C0906-105-1750-S**	**1.021**	**25.93**	**37.84**	**168.31**	**51.90**	**9.08**
C0906-105-2000-M	**0.906**	**23.01**	**0.105**	**2.67**	**2.000**	**50.80**	**1.047**	**26.60**	**0.920**	**23.36**	**51.07**	**227.19**	**53.61**	**9.38**	**C0906-105-2000-S**	**1.153**	**29.28**	**37.84**	**168.31**	**44.66**	**7.81**
C0906-105-2250-M	**0.906**	**23.01**	**0.105**	**2.67**	**2.250**	**57.15**	**1.164**	**29.57**	**1.017**	**25.84**	**51.07**	**227.19**	**47.04**	**8.23**	**C0906-105-2250-S**	**1.284**	**32.62**	**37.84**	**168.31**	**39.18**	**6.86**
C0906-105-2500-M	**0.906**	**23.01**	**0.105**	**2.67**	**2.500**	**63.50**	**1.281**	**32.54**	**1.115**	**28.32**	**51.07**	**227.19**	**41.90**	**7.33**	**C0906-105-2500-S**	**1.416**	**35.96**	**37.84**	**168.31**	**34.90**	**6.11**
C0906-105-2750-M	**0.906**	**23.01**	**0.105**	**2.67**	**2.750**	**69.85**	**1.398**	**35.51**	**1.213**	**30.80**	**51.07**	**227.19**	**37.78**	**6.61**	**C0906-105-2750-S**	**1.548**	**39.31**	**37.84**	**168.31**	**31.47**	**5.51**
C0906-105-3000-M	**0.906**	**23.01**	**0.105**	**2.67**	**3.000**	**76.20**	**1.515**	**38.49**	**1.310**	**33.28**	**51.07**	**227.19**	**34.40**	**6.02**	**C0906-105-3000-S**	**1.680**	**42.66**	**37.84**	**168.31**	**28.66**	**5.01**
C0906-105-3500-M	**0.906**	**23.01**	**0.105**	**2.67**	**3.500**	**88.90**	**1.749**	**44.43**	**1.506**	**38.24**	**51.07**	**227.19**	**29.17**	**5.10**	**C0906-105-3500-S**	**1.943**	**49.35**	**37.84**	**168.31**	**24.30**	**4.25**
C0906-105-4000-M	**0.906**	**23.01**	**0.105**	**2.67**	**4.000**	**101.60**	**1.983**	**50.36**	**1.701**	**43.20**	**51.07**	**227.19**	**25.32**	**4.43**	**C0906-105-4000-S**	**2.206**	**56.03**	**37.84**	**168.31**	**21.09**	**3.69**
D13330	0.913	23.20	0.126	3.20	1.319	33.50	0.728	18.50	0.693	17.60	129.63	576.63	218.00	38.15	D23330	0.728	18.50	108.03	480.53	181.60	31.78
D13340	0.913	23.20	0.126	3.20	1.949	49.50	1.020	25.90	0.945	24.00	129.63	576.63	138.40	24.22	D23340	1.020	25.90	108.03	480.53	115.31	20.18
D13350	0.913	23.20	0.126	3.20	2.913	74.00	1.461	37.10	1.323	33.60	129.63	576.63	89.66	15.69	D23350	1.461	37.10	108.03	480.53	74.69	13.07
D13360	0.913	23.20	0.126	3.20	4.134	105.00	2.031	51.60	1.827	46.40	129.63	576.63	61.09	10.69	D23360	2.031	51.60	108.03	480.53	50.86	8.90

FOR INFORMATION ON ALTERNATIVE FINISHES, SEE PAGE 311

Part Numbers with an "*" are squared and not ground. **Part Numbers in bold** represent the newly expanded Associated Spring RAYMOND compression spring offering.

MUSIC WIRE															STAINLESS STEEL						
Catalog #	Outside Diameter (OD)		Wire Diameter (d)		Free Length (L) Approx		Load Length (L_1)		Solid Height (Sh) Approx		Load (P) at L_1		Spring Rate (R)		Catalog #	Load Length (L_1)		Load (P) at L_1		Spring Rate (R)	
	in	mm	in	mm	in	mm	in	mm	in	mm	lb	N	lb/in	N/mm		in	mm	lb	N	lb/in	N/mm
D13370	0.913	23.20	0.126	3.20	6.102	155.00	2.882	73.20	2.583	65.60	129.63	576.63	41.20	7.21	D23370	2.882	73.20	108.03	480.53	17.20	3.01
C0938-080-0750-M	**0.938**	**23.83**	**0.080**	**2.03**	**0.750**	**19.05**	**0.435**	**11.05**	**0.248**	**6.31**	**23.26**	**103.48**	**73.91**	**12.93**	**C0938-080-0750-S**	**0.466**	**11.83**	**17.51**	**77.89**	**61.57**	**10.77**
C0938-080-1000-M	**0.938**	**23.83**	**0.080**	**2.03**	**1.000**	**25.40**	**0.552**	**14.02**	**0.298**	**7.58**	**23.26**	**103.48**	**51.91**	**9.08**	**C0938-080-1000-S**	**0.595**	**15.11**	**17.51**	**77.89**	**43.24**	**7.57**
C0938-080-1250-M	**0.938**	**23.83**	**0.080**	**2.03**	**1.250**	**31.75**	**0.669**	**16.98**	**0.348**	**8.84**	**23.26**	**103.48**	**40.01**	**7.00**	**C0938-080-1250-S**	**0.725**	**18.41**	**17.51**	**77.89**	**33.33**	**5.83**
C0938-080-1500-M	**0.938**	**23.83**	**0.080**	**2.03**	**1.500**	**38.10**	**0.785**	**19.94**	**0.398**	**10.11**	**23.26**	**103.48**	**32.54**	**5.69**	**C0938-080-1500-S**	**0.854**	**21.69**	**17.51**	**77.89**	**27.11**	**4.74**
C0938-080-1750-M	**0.938**	**23.83**	**0.080**	**2.03**	**1.750**	**44.45**	**0.902**	**22.91**	**0.448**	**11.38**	**23.26**	**103.48**	**27.43**	**4.80**	**C0938-080-1750-S**	**0.984**	**24.99**	**17.51**	**77.89**	**22.85**	**4.00**
C0938-080-2000-M	**0.938**	**23.83**	**0.080**	**2.03**	**2.000**	**50.80**	**1.018**	**25.87**	**0.498**	**12.64**	**23.26**	**103.48**	**23.70**	**4.15**	**C0938-080-2000-S**	**1.113**	**28.27**	**17.51**	**77.89**	**19.74**	**3.45**
C0938-080-2250-M	**0.938**	**23.83**	**0.080**	**2.03**	**2.250**	**57.15**	**1.135**	**28.82**	**0.543**	**13.80**	**23.26**	**103.48**	**20.86**	**3.65**	**C0938-080-2250-S**	**1.242**	**31.55**	**17.51**	**77.89**	**17.38**	**3.04**
C0938-080-2500-M	**0.938**	**23.83**	**0.080**	**2.03**	**2.500**	**63.50**	**1.252**	**31.80**	**0.588**	**14.94**	**23.26**	**103.48**	**18.64**	**3.26**	**C0938-080-2500-S**	**1.372**	**34.86**	**17.51**	**77.89**	**15.53**	**2.72**
C0938-080-2750-M	**0.938**	**23.83**	**0.080**	**2.03**	**2.750**	**69.85**	**1.369**	**34.76**	**0.633**	**16.08**	**23.26**	**103.48**	**16.84**	**2.95**	**C0938-080-2750-S**	**1.502**	**38.14**	**17.51**	**77.89**	**14.03**	**2.45**
C0938-080-2938-M	**0.938**	**23.83**	**0.080**	**2.03**	**2.938**	**74.63**	**1.456**	**36.99**	**0.667**	**16.94**	**23.26**	**103.48**	**15.70**	**2.75**	**C0938-080-2938-S**	**1.599**	**40.62**	**17.51**	**77.89**	**13.08**	**2.29**
C0938-080-3000-M	**0.938**	**23.83**	**0.080**	**2.03**	**3.000**	**76.20**	**1.484**	**37.70**	**0.678**	**17.22**	**23.26**	**103.48**	**15.35**	**2.69**	**C0938-080-3000-S**	**1.631**	**41.42**	**17.51**	**77.89**	**12.79**	**2.24**
C0938-080-3500-M	**0.938**	**23.83**	**0.080**	**2.03**	**3.500**	**88.90**	**1.719**	**43.65**	**0.768**	**19.50**	**23.26**	**103.48**	**13.06**	**2.29**	**C0938-080-3500-S**	**1.890**	**48.02**	**17.51**	**77.89**	**10.88**	**1.90**
C0938-080-4000-M	**0.938**	**23.83**	**0.080**	**2.03**	**4.000**	**101.60**	**1.952**	**49.58**	**0.857**	**21.78**	**23.26**	**103.48**	**11.36**	**1.99**	**C0938-080-4000-S**	**2.150**	**54.60**	**17.51**	**77.89**	**9.46**	**1.66**
C0940-085-1625-M	**0.940**	**23.88**	**0.085**	**2.16**	**1.625**	**41.28**	**0.695**	**17.66**	**0.558**	**14.16**	**26.28**	**116.89**	**28.26**	**4.95**	**C0940-085-1625-S**	**0.786**	**19.96**	**20.62**	**91.74**	**24.58**	**4.30**
C0940-085-1750-M	**0.940**	**23.88**	**0.085**	**2.16**	**1.750**	**44.45**	**0.740**	**18.80**	**0.590**	**14.99**	**26.28**	**116.89**	**26.03**	**4.55**	**C0940-085-1750-S**	**0.839**	**21.30**	**20.62**	**91.74**	**22.63**	**3.96**
C0940-085-1875-M	**0.940**	**23.88**	**0.085**	**2.16**	**1.875**	**47.63**	**0.785**	**19.95**	**0.623**	**15.82**	**26.28**	**116.89**	**24.12**	**4.22**	**C0940-085-1875-S**	**0.892**	**22.65**	**20.62**	**91.74**	**20.97**	**3.67**
C0940-085-2000-M	**0.940**	**23.88**	**0.085**	**2.16**	**2.000**	**50.80**	**0.831**	**21.10**	**0.655**	**16.65**	**26.28**	**116.89**	**22.47**	**3.93**	**C0940-085-2000-S**	**0.944**	**23.99**	**20.62**	**91.74**	**19.54**	**3.42**
C0940-085-2125-M	**0.940**	**23.88**	**0.085**	**2.16**	**2.125**	**53.98**	**0.876**	**22.24**	**0.688**	**17.47**	**26.28**	**116.89**	**21.03**	**3.68**	**C0940-085-2125-S**	**0.997**	**25.33**	**20.62**	**91.74**	**18.29**	**3.20**
C0940-085-2250-M	**0.940**	**23.88**	**0.085**	**2.16**	**2.250**	**57.15**	**0.921**	**23.39**	**0.720**	**18.30**	**26.28**	**116.89**	**19.77**	**3.46**	**C0940-085-2250-S**	**1.050**	**26.68**	**20.62**	**91.74**	**17.19**	**3.01**
C0940-085-2375-M	**0.940**	**23.88**	**0.085**	**2.16**	**2.375**	**60.33**	**0.966**	**24.53**	**0.753**	**19.13**	**26.28**	**116.89**	**18.65**	**3.26**	**C0940-085-2375-S**	**1.103**	**28.02**	**20.62**	**91.74**	**16.22**	**2.84**
C0940-085-2500-M	**0.940**	**23.88**	**0.085**	**2.16**	**2.500**	**63.50**	**1.011**	**25.68**	**0.786**	**19.96**	**26.28**	**116.89**	**17.65**	**3.09**	**C0940-085-2500-S**	**1.156**	**29.36**	**20.62**	**91.74**	**15.35**	**2.69**
C0940-085-2625-M	**0.940**	**23.88**	**0.085**	**2.16**	**2.625**	**66.68**	**1.056**	**26.83**	**0.818**	**20.78**	**26.28**	**116.89**	**16.75**	**2.93**	**C0940-085-2625-S**	**1.209**	**30.71**	**20.62**	**91.74**	**14.57**	**2.55**
C0940-085-2750-M	**0.940**	**23.88**	**0.085**	**2.16**	**2.750**	**69.85**	**1.101**	**27.97**	**0.851**	**21.61**	**26.28**	**116.89**	**15.94**	**2.79**	**C0940-085-2750-S**	**1.262**	**32.05**	**20.62**	**91.74**	**13.86**	**2.43**
C0940-085-2875-M	**0.940**	**23.88**	**0.085**	**2.16**	**2.875**	**73.03**	**1.146**	**29.12**	**0.883**	**22.44**	**26.28**	**116.89**	**15.20**	**2.66**	**C0940-085-2875-S**	**1.315**	**33.40**	**20.62**	**91.74**	**13.22**	**2.31**
C0940-085-3000-M	**0.940**	**23.88**	**0.085**	**2.16**	**3.000**	**76.20**	**1.191**	**30.26**	**0.916**	**23.26**	**26.28**	**116.89**	**14.53**	**2.54**	**C0940-085-3000-S**	**1.368**	**34.74**	**20.62**	**91.74**	**12.64**	**2.21**
C0940-085-3250-M	**0.940**	**23.88**	**0.085**	**2.16**	**3.250**	**82.55**	**1.282**	**32.56**	**0.981**	**24.92**	**26.28**	**116.89**	**13.35**	**2.34**	**C0940-085-3250-S**	**1.473**	**37.43**	**20.62**	**91.74**	**11.61**	**2.03**
C0940-085-3500-M	**0.940**	**23.88**	**0.085**	**2.16**	**3.500**	**88.90**	**1.372**	**34.85**	**1.046**	**26.57**	**26.28**	**116.89**	**12.35**	**2.16**	**C0940-085-3500-S**	**1.579**	**40.11**	**20.62**	**91.74**	**10.74**	**1.88**
C0940-085-3750-M	**0.940**	**23.88**	**0.085**	**2.16**	**3.750**	**95.25**	**1.462**	**37.14**	**1.111**	**28.23**	**26.28**	**116.89**	**11.49**	**2.01**	**C0940-085-3750-S**	**1.685**	**42.80**	**20.62**	**91.74**	**9.99**	**1.75**
C0940-085-4000-M	**0.940**	**23.88**	**0.085**	**2.16**	**4.000**	**101.60**	**1.552**	**39.43**	**1.177**	**29.88**	**26.28**	**116.89**	**10.74**	**1.88**	**C0940-085-4000-S**	**1.791**	**45.49**	**20.62**	**91.74**	**9.34**	**1.63**
C0940-085-4250-M	**0.940**	**23.88**	**0.085**	**2.16**	**4.250**	**107.95**	**1.643**	**41.72**	**1.242**	**31.54**	**26.28**	**116.89**	**10.08**	**1.76**	**C0940-085-4250-S**	**1.897**	**48.18**	**20.62**	**91.74**	**8.76**	**1.53**
C0940-085-4500-M	**0.940**	**23.88**	**0.085**	**2.16**	**4.500**	**114.30**	**1.733**	**44.02**	**1.307**	**33.19**	**26.28**	**116.89**	**9.50**	**1.66**	**C0940-085-4500-S**	**2.002**	**50.86**	**20.62**	**91.74**	**8.26**	**1.45**
C0940-085-4750-M	**0.940**	**23.88**	**0.085**	**2.16**	**4.750**	**120.65**	**1.823**	**46.31**	**1.372**	**34.85**	**26.28**	**116.89**	**8.98**	**1.57**	**C0940-085-4750-S**	**2.108**	**53.55**	**20.62**	**91.74**	**7.81**	**1.37**
C0940-085-5000-M	**0.940**	**23.88**	**0.085**	**2.16**	**5.000**	**127.00**	**1.913**	**48.60**	**1.437**	**36.50**	**26.28**	**116.89**	**8.51**	**1.49**	**C0940-085-5000-S**	**2.214**	**56.24**	**20.62**	**91.74**	**7.40**	**1.30**
C0940-085-5250-M	**0.940**	**23.88**	**0.085**	**2.16**	**5.250**	**133.35**	**2.004**	**50.89**	**1.502**	**38.16**	**26.28**	**116.89**	**8.10**	**1.42**	**C0940-085-5250-S**	**2.320**	**58.93**	**20.62**	**91.74**	**7.04**	**1.23**
C0940-085-5500-M	**0.940**	**23.88**	**0.085**	**2.16**	**5.500**	**139.70**	**2.094**	**53.18**	**1.567**	**39.81**	**26.28**	**116.89**	**7.72**	**1.35**	**C0940-085-5500-S**	**2.426**	**61.61**	**20.62**	**91.74**	**6.71**	**1.17**
C0940-085-5750-M	**0.940**	**23.88**	**0.085**	**2.16**	**5.750**	**146.05**	**2.184**	**55.48**	**1.633**	**41.47**	**26.28**	**116.89**	**7.37**	**1.29**	**C0940-085-5750-S**	**2.532**	**64.30**	**20.62**	**91.74**	**6.41**	**1.12**
C0940-085-6000-M	**0.940**	**23.88**	**0.085**	**2.16**	**6.000**	**152.40**	**2.274**	**57.77**	**1.698**	**43.12**	**26.28**	**116.89**	**7.05**	**1.23**	**C0940-085-6000-S**	**2.637**	**66.99**	**20.62**	**91.74**	**6.13**	**1.07**
C0940-085-6250-M	**0.940**	**23.88**	**0.085**	**2.16**	**6.250**	**158.75**	**2.365**	**60.06**	**1.763**	**44.78**	**26.28**	**116.89**	**6.76**	**1.18**	**C0940-085-6250-S**	**2.743**	**69.68**	**20.62**	**91.74**	**5.88**	**1.03**
C0940-085-6500-M	**0.940**	**23.88**	**0.085**	**2.16**	**6.500**	**165.10**	**2.455**	**62.35**	**1.828**	**46.43**	**26.28**	**116.89**	**6.50**	**1.14**	**C0940-085-6500-S**	**2.849**	**72.36**	**20.62**	**91.74**	**5.65**	**0.99**
C0940-085-6750-M	**0.940**	**23.88**	**0.085**	**2.16**	**6.750**	**171.45**	**2.545**	**64.64**	**1.893**	**48.08**	**26.28**	**116.89**	**6.25**	**1.09**	**C0940-085-6750-S**	**2.955**	**75.05**	**20.62**	**91.74**	**5.43**	**0.95**
C0940-085-7000-M	**0.940**	**23.88**	**0.085**	**2.16**	**7.000**	**177.80**	**2.635**	**66.93**	**1.958**	**49.74**	**26.28**	**116.89**	**6.02**	**1.05**	**C0940-085-7000-S**	**3.061**	**77.74**	**20.62**	**91.74**	**5.24**	**0.92**
C0940-085-7500-M	**0.940**	**23.88**	**0.085**	**2.16**	**7.500**	**190.50**	**2.816**	**71.52**	**2.089**	**53.05**	**26.28**	**116.89**	**5.61**	**0.98**	**C0940-085-7500-S**	**3.272**	**83.11**	**20.62**	**91.74**	**4.88**	**0.85**
C0940-085-8000-M	**0.940**	**23.88**	**0.085**	**2.16**	**8.000**	**203.20**	**2.996**	**76.10**	**2.219**	**56.36**	**26.28**	**116.89**	**5.25**	**0.92**	**C0940-085-8000-S**	**3.484**	**88.49**	**20.62**	**91.74**	**4.57**	**0.80**
C0940-085-8500-M	**0.940**	**23.88**	**0.085**	**2.16**	**8.500**	**215.90**	**3.177**	**80.69**	**2.349**	**59.67**	**26.28**	**116.89**	**4.94**	**0.86**	**C0940-085-8500-S**	**3.695**	**93.86**	**20.62**	**91.74**	**4.29**	**0.75**
C0940-085-9000-M*	**0.940**	**23.88**	**0.085**	**2.16**	**9.000**	**228.60**	**3.411**	**86.65**	**2.546**	**64.68**	**26.28**	**116.89**	**4.70**	**0.82**	**C0940-085-9000-S***	**3.956**	**100.48**	**20.62**	**91.74**	**4.09**	**0.72**
C0940-085-9500-M*	**0.940**	**23.88**	**0.085**	**2.16**	**9.500**	**241.30**	**3.592**	**91.23**	**2.677**	**67.99**	**26.28**	**116.89**	**4.45**	**0.78**	**C0940-085-9500-S***	**4.168**	**105.86**	**20.62**	**91.74**	**3.87**	**0.68**
C0940-092-1500-M	**0.940**	**23.88**	**0.092**	**2.34**	**1.500**	**38.10**	**0.703**	**17.86**	**0.590**	**15.00**	**32.73**	**145.61**	**41.07**	**7.19**	**C0940-092-1500-S**	**0.784**	**19.91**	**25.58**	**113.79**	**35.71**	**6.25**
C0940-092-1625-M	**0.940**	**23.88**	**0.092**	**2.34**	**1.625**	**41.28**	**0.752**	**19.11**	**0.628**	**15.95**	**32.73**	**145.61**	**37.51**	**6.56**	**C0940-092-1625-S**	**0.841**	**21.35**	**25.58**	**113.79**	**32.62**	**5.71**
C0940-092-1750-M	**0.940**	**23.88**	**0.092**	**2.34**	**1.750**	**44.45**	**0.802**	**20.36**	**0.666**	**16.91**	**32.73**	**145.61**	**34.51**	**6.04**	**C0940-092-1750-S**	**0.898**	**22.80**	**25.58**	**113.79**	**30.01**	**5.25**
C0940-092-1875-M	**0.940**	**23.88**	**0.092**	**2.34**	**1.875**	**47.63**	**0.851**	**21.61**	**0.704**	**17.87**	**32.73**	**145.61**	**31.96**	**5.59**	**C0940-092-1875-S**	**0.955**	**24.25**	**25.58**	**113.79**	**27.79**	**4.86**
C0940-092-2000-M	**0.940**	**23.88**	**0.092**	**2.34**	**2.000**	**50.80**	**0.900**	**22.86**	**0.741**	**18.83**	**32.73**	**145.61**	**29.76**	**5.21**	**C0940-092-2000-S**	**1.012**	**25.69**	**25.58**	**113.79**	**25.88**	**4.53**
C0940-092-2125-M	**0.940**	**23.88**	**0.092**	**2.34**	**2.125**	**53.98**	**0.949**	**24.12**	**0.779**	**19.79**	**32.73**	**145.61**	**27.85**	**4.87**	**C0940-092-2125-S**	**1.069**	**27.14**	**25.58**	**113.79**	**24.21**	**4.24**
C0940-092-2250-M	**0.940**	**23.88**	**0.092**	**2.34**	**2.250**	**57.15**	**0.999**	**25.37**	**0.817**	**20.75**	**32.73**	**145.61**	**26.16**	**4.58**	**C0940-092-2250-S**	**1.125**	**28.59**	**25.58**	**113.79**	**22.75**	**3.98**
C0940-092-2375-M	**0.940**	**23.88**	**0.092**	**2.34**	**2.375**	**60.33**	**1.048**	**26.62**	**0.855**	**21.70**	**32.73**	**145.61**	**24.67**	**4.32**	**C0940-092-2375-S**	**1.182**	**30.03**	**25.58**	**113.79**	**21.45**	**3.75**
C0940-092-2500-M	**0.940**	**23.88**	**0.092**	**2.34**	**2.500**	**63.50**	**1.097**	**27.87**	**0.892**	**22.66**	**32.73**	**145.61**	**23.34**	**4.08**	**C0940-092-2500-S**	**1.239**	**31.48**	**25.58**	**113.79**	**20.29**	**3.55**
C0940-092-2625-M	**0.940**	**23.88**	**0.092**	**2.34**	**2.625**	**66.68**	**1.147**	**29.12**	**0.930**	**23.62**	**32.73**	**145.61**	**22.14**	**3.87**	**C0940-092-2625-S**	**1.296**	**32.93**	**25.58**	**113.79**	**19.25**	**3.37**
C0940-092-2750-M	**0.940**	**23.88**	**0.092**	**2.34**	**2.750**	**69.85**	**1.196**	**30.38**	**0.968**	**24.58**	**32.73**	**145.61**	**21.06**	**3.69**	**C0940-092-2750-S**	**1.353**	**34.37**	**25.58**	**113.79**	**18.32**	**3.21**
C0940-092-2875-M	**0.940**	**23.88**	**0.092**	**2.34**	**2.875**	**73.03**	**1.245**	**31.63**	**1.005**	**25.54**	**32.73**	**145.61**	**20.09**	**3.51**	**C0940-092-2875-S**	**1.410**	**35.82**	**25.58**	**113.79**	**17.47**	**3.06**
C0940-092-3000-M	**0.940**	**23.88**	**0.092**	**2.34**	**3.000**	**76.20**	**1.294**	**32.88**	**1.043**	**26.50**	**32.73**	**145.61**	**19.19**	**3.36**	**C0940-092-3000-S**	**1.467**	**37.27**	**25.58**	**113.79**	**16.69**	**2.92**
C0940-092-3250-M	**0.940**	**23.88**	**0.092**	**2.34**	**3.250**	**82.55**	**1.393**	**35.38**	**1.119**	**28.41**	**32.73**	**145.61**	**17.63**	**3.08**	**C0940-092-3250-S**	**1.581**	**40.16**	**25.58**	**113.79**	**15.33**	**2.68**
C0940-092-3500-M	**0.940**	**23.88**	**0.092**	**2.34**	**3.500**	**88.90**	**1.492**	**37.89**	**1.194**	**30.33**	**32.73**	**145.61**	**16.30**	**2.85**	**C0940-092-3500-S**	**1.695**	**43.06**	**25.58**	**113.79**	**14.17**	**2.48**
C0940-092-3750-M	**0.940**	**23.88**	**0.092**	**2.34**	**3.750**	**95.25**	**1.590**	**40.39**	**1.270**	**32.25**	**32.73**	**145.61**	**15.16**	**2.65**	**C0940-092-3750-S**	**1.809**	**45.95**	**25.58**	**113.79**	**13.18**	**2.31**
C0940-092-4000-M	**0.940**	**23.88**	**0.092**	**2.34**	**4.000**	**101.60**	**1.689**	**42.90**	**1.345**	**34.16**	**32.73**	**145.61**	**14.16**	**2.48**	**C0940-092-4000-S**	**1.923**	**48.84**	**25.58**	**113.79**	**12.32**	**2.16**

Part Numbers with an "*" are squared and not ground. **Part Numbers in bold** represent the newly expanded Associated Spring RAYMOND compression spring offering.

MUSIC WIRE															STAINLESS STEEL						
Catalog #	Outside Diameter (OD)		Wire Diameter (d)		Free Length (L) Approx		Load Length (L_1)		Solid Height (Sh) Approx		Load (P) at L_1		Spring Rate (R)		Catalog #	Load Length (L_1)		Load (P) at L_1		Spring Rate (R)	
	in	mm	in	mm	in	mm	in	mm	in	mm	lb	N	lb/in	N/mm		in	mm	lb	N	lb/in	N/mm
C0940-092-4250-M	0.940	23.88	0.092	2.34	4.250	107.95	1.787	45.40	1.420	36.08	32.73	145.61	13.29	2.33	**C0940-092-4250-S**	2.037	51.74	25.58	113.79	11.56	2.02
C0940-092-4500-M	0.940	23.88	0.092	2.34	4.500	114.30	1.886	47.90	1.496	38.00	32.73	145.61	12.52	2.19	**C0940-092-4500-S**	2.151	54.63	25.58	113.79	10.89	1.91
C0940-092-4750-M	0.940	23.88	0.092	2.34	4.750	120.65	1.985	50.41	1.571	39.91	32.73	145.61	11.84	2.07	**C0940-092-4750-S**	2.265	57.52	25.58	113.79	10.29	1.80
C0940-092-5000-M	0.940	23.88	0.092	2.34	5.000	127.00	2.083	52.91	1.647	41.83	32.73	145.61	11.22	1.96	**C0940-092-5000-S**	2.379	60.42	25.58	113.79	9.76	1.71
C0940-092-5250-M	0.940	23.88	0.092	2.34	5.250	133.35	2.182	55.42	1.722	43.75	32.73	145.61	10.67	1.87	**C0940-092-5250-S**	2.493	63.31	25.58	113.79	9.28	1.62
C0940-092-5500-M	0.940	23.88	0.092	2.34	5.500	139.70	2.280	57.92	1.798	45.66	32.73	145.61	10.17	1.78	**C0940-092-5500-S**	2.607	66.21	25.58	113.79	8.84	1.55
C0940-092-5750-M	0.940	23.88	0.092	2.34	5.750	146.05	2.379	60.42	1.873	47.58	32.73	145.61	9.71	1.70	**C0940-092-5750-S**	2.720	69.10	25.58	113.79	8.44	1.48
C0940-092-6000-M	0.940	23.88	0.092	2.34	6.000	152.40	2.477	62.93	1.949	49.50	32.73	145.61	9.29	1.63	**C0940-092-6000-S**	2.834	71.99	25.58	113.79	8.08	1.41
C0940-092-6250-M	0.940	23.88	0.092	2.34	6.250	158.75	2.576	65.43	2.024	51.41	32.73	145.61	8.91	1.56	**C0940-092-6250-S**	2.948	74.89	25.58	113.79	7.75	1.36
C0940-092-6500-M	0.940	23.88	0.092	2.34	6.500	165.10	2.675	67.94	2.100	53.33	32.73	145.61	8.56	1.50	**C0940-092-6500-S**	3.062	77.78	25.58	113.79	7.44	1.30
C0940-092-6750-M	0.940	23.88	0.092	2.34	6.750	171.45	2.773	70.44	2.175	55.25	32.73	145.61	8.23	1.44	**C0940-092-6750-S**	3.176	80.67	25.58	113.79	7.16	1.25
C0940-092-7000-M	0.940	23.88	0.092	2.34	7.000	177.80	2.872	72.94	2.251	57.16	32.73	145.61	7.93	1.39	**C0940-092-7000-S**	3.290	83.57	25.58	113.79	6.90	1.21
C0940-092-7500-M	0.940	23.88	0.092	2.34	7.500	190.50	3.069	77.95	2.401	61.00	32.73	145.61	7.39	1.29	**C0940-092-7500-S**	3.518	89.36	25.58	113.79	6.42	1.12
C0940-092-8000-M*	0.940	23.88	0.092	2.34	8.000	203.20	3.322	84.38	2.621	66.58	32.73	145.61	7.00	1.22	**C0940-092-8000-S***	3.796	96.42	25.58	113.79	6.09	1.06
C0940-092-8500-M*	0.940	23.88	0.092	2.34	8.500	215.90	3.519	89.38	2.772	70.41	32.73	145.61	6.57	1.15	**C0940-092-8500-S***	4.024	102.20	25.58	113.79	5.72	1.00
C0940-092-9000-M*	0.940	23.88	0.092	2.34	9.000	228.60	3.716	94.39	2.923	74.24	32.73	145.61	6.20	1.08	**C0940-092-9000-S***	4.252	107.99	25.58	113.79	5.39	0.94
C0940-092-9500-M*	0.940	23.88	0.092	2.34	9.500	241.30	3.913	99.40	3.074	78.08	32.73	145.61	5.86	1.03	**C0940-092-9500-S***	4.479	113.78	25.58	113.79	5.10	0.89
C0940-098-1500-M	0.940	23.88	0.098	2.49	1.500	38.10	0.748	19.01	0.646	16.42	39.00	173.46	51.88	9.08	**C0940-098-1500-S**	0.827	21.01	30.35	135.02	45.11	7.89
C0940-098-1625-M	0.940	23.88	0.098	2.49	1.625	41.28	0.801	20.35	0.689	17.49	39.00	173.46	47.34	8.28	**C0940-098-1625-S**	0.888	22.54	30.35	135.02	41.16	7.20
C0940-098-1750-M	0.940	23.88	0.098	2.49	1.750	44.45	0.854	21.70	0.731	18.56	39.00	173.46	43.53	7.62	**C0940-098-1750-S**	0.948	24.08	30.35	135.02	37.85	6.62
C0940-098-1875-M	0.940	23.88	0.098	2.49	1.875	47.63	0.907	23.04	0.773	19.64	39.00	173.46	40.29	7.05	**C0940-098-1875-S**	1.009	25.62	30.35	135.02	35.03	6.13
C0940-098-2000-M	0.940	23.88	0.098	2.49	2.000	50.80	0.960	24.38	0.815	20.71	39.00	173.46	37.50	6.56	**C0940-098-2000-S**	1.069	27.15	30.35	135.02	32.61	5.71
C0940-098-2125-M	0.940	23.88	0.098	2.49	2.125	53.98	1.013	25.73	0.858	21.78	39.00	173.46	35.07	6.14	**C0940-098-2125-S**	1.130	28.69	30.35	135.02	30.49	5.34
C0940-098-2250-M	0.940	23.88	0.098	2.49	2.250	57.15	1.066	27.07	0.900	22.85	39.00	173.46	32.93	5.76	**C0940-098-2250-S**	1.190	30.23	30.35	135.02	28.64	5.01
C0940-098-2375-M	0.940	23.88	0.098	2.49	2.375	60.33	1.119	28.42	0.942	23.93	39.00	173.46	31.04	5.43	**C0940-098-2375-S**	1.251	31.76	30.35	135.02	27.00	4.72
C0940-098-2500-M	0.940	23.88	0.098	2.49	2.500	63.50	1.172	29.76	0.984	25.00	39.00	173.46	29.36	5.14	**C0940-098-2500-S**	1.311	33.30	30.35	135.02	25.53	4.47
C0940-098-2625-M	0.940	23.88	0.098	2.49	2.625	66.68	1.225	31.11	1.027	26.07	39.00	173.46	27.85	4.87	**C0940-098-2625-S**	1.372	34.84	30.35	135.02	24.22	4.24
C0940-098-2750-M	0.940	23.88	0.098	2.49	2.750	69.85	1.278	32.45	1.069	27.15	39.00	173.46	26.49	4.64	**C0940-098-2750-S**	1.432	36.37	30.35	135.02	23.03	4.03
C0940-098-2875-M	0.940	23.88	0.098	2.49	2.875	73.03	1.331	33.80	1.111	28.22	39.00	173.46	25.25	4.42	**C0940-098-2875-S**	1.492	37.91	30.35	135.02	21.96	3.84
C0940-098-3000-M	0.940	23.88	0.098	2.49	3.000	76.20	1.384	35.14	1.153	29.29	39.00	173.46	24.12	4.22	**C0940-098-3000-S**	1.553	39.45	30.35	135.02	20.98	3.67
C0940-098-3250-M	0.940	23.88	0.098	2.49	3.250	82.55	1.489	37.83	1.238	31.44	39.00	173.46	22.15	3.88	**C0940-098-3250-S**	1.674	42.52	30.35	135.02	19.26	3.37
C0940-098-3500-M	0.940	23.88	0.098	2.49	3.500	88.90	1.595	40.52	1.322	33.58	39.00	173.46	20.47	3.58	**C0940-098-3500-S**	1.795	45.59	30.35	135.02	17.80	3.12
C0940-098-3750-M	0.940	23.88	0.098	2.49	3.750	95.25	1.701	43.21	1.407	35.73	39.00	173.46	19.03	3.33	**C0940-098-3750-S**	1.916	48.67	30.35	135.02	16.55	2.90
C0940-098-4000-M	0.940	23.88	0.098	2.49	4.000	101.60	1.807	45.90	1.491	37.87	39.00	173.46	17.78	3.11	**C0940-098-4000-S**	2.037	51.74	30.35	135.02	15.46	2.71
C0940-098-4250-M	0.940	23.88	0.098	2.49	4.250	107.95	1.913	48.59	1.576	40.02	39.00	173.46	16.69	2.92	**C0940-098-4250-S**	2.158	54.81	30.35	135.02	14.51	2.54
C0940-098-4500-M	0.940	23.88	0.098	2.49	4.500	114.30	2.019	51.28	1.660	42.16	39.00	173.46	15.72	2.75	**C0940-098-4500-S**	2.279	57.88	30.35	135.02	13.67	2.39
C0940-098-4750-M	0.940	23.88	0.098	2.49	4.750	120.65	2.125	53.97	1.744	44.31	39.00	173.46	14.85	2.60	**C0940-098-4750-S**	2.400	60.96	30.35	135.02	12.92	2.26
C0940-098-5000-M	0.940	23.88	0.098	2.49	5.000	127.00	2.231	56.66	1.829	46.46	39.00	173.46	14.08	2.46	**C0940-098-5000-S**	2.521	64.03	30.35	135.02	12.24	2.14
C0940-098-5250-M	0.940	23.88	0.098	2.49	5.250	133.35	2.336	59.35	1.913	48.60	39.00	173.46	13.38	2.34	**C0940-098-5250-S**	2.642	67.10	30.35	135.02	11.64	2.04
C0940-098-5500-M	0.940	23.88	0.098	2.49	5.500	139.70	2.442	62.04	1.998	50.75	39.00	173.46	12.75	2.23	**C0940-098-5500-S**	2.763	70.18	30.35	135.02	11.09	1.94
C0940-098-5750-M	0.940	23.88	0.098	2.49	5.750	146.05	2.548	64.73	2.082	52.89	39.00	173.46	12.18	2.13	**C0940-098-5750-S**	2.884	73.25	30.35	135.02	10.59	1.85
C0940-098-6000-M	0.940	23.88	0.098	2.49	6.000	152.40	2.654	67.41	2.167	55.04	39.00	173.46	11.66	2.04	**C0940-098-6000-S**	3.005	76.32	30.35	135.02	10.14	1.77
C0940-098-6250-M	0.940	23.88	0.098	2.49	6.250	158.75	2.760	70.10	2.251	57.18	39.00	173.46	11.17	1.96	**C0940-098-6250-S**	3.126	79.40	30.35	135.02	9.72	1.70
C0940-098-6500-M	0.940	23.88	0.098	2.49	6.500	165.10	2.866	72.79	2.336	59.33	39.00	173.46	10.73	1.88	**C0940-098-6500-S**	3.247	82.47	30.35	135.02	9.33	1.63
C0940-098-6750-M	0.940	23.88	0.098	2.49	6.750	171.45	2.972	75.48	2.420	61.47	39.00	173.46	10.32	1.81	**C0940-098-6750-S**	3.368	85.54	30.35	135.02	8.98	1.57
C0940-098-7000-M	0.940	23.88	0.098	2.49	7.000	177.80	3.078	78.17	2.505	63.62	39.00	173.46	9.94	1.74	**C0940-098-7000-S**	3.489	88.62	30.35	135.02	8.65	1.51
C0940-098-7500-M	0.940	23.88	0.098	2.49	7.500	190.50	3.289	83.55	2.674	67.91	39.00	173.46	9.26	1.62	**C0940-098-7500-S**	3.731	94.76	30.35	135.02	8.05	1.41
C0940-098-8000-M	0.940	23.88	0.098	2.49	8.000	203.20	3.501	88.93	2.843	72.20	39.00	173.46	8.67	1.52	**C0940-098-8000-S**	3.973	100.91	30.35	135.02	7.54	1.32
C0940-098-8500-M*	0.940	23.88	0.098	2.49	8.500	215.90	3.769	95.74	3.081	78.27	39.00	173.46	8.24	1.44	**C0940-098-8500-S***	4.265	108.34	30.35	135.02	7.17	1.25
C0940-098-9000-M*	0.940	23.88	0.098	2.49	9.000	228.60	3.981	101.12	3.250	82.56	39.00	173.46	7.77	1.36	**C0940-098-9000-S***	4.507	114.48	30.35	135.02	6.76	1.18
C0940-098-9500-M*	0.940	23.88	0.098	2.49	9.500	241.30	4.193	106.50	3.419	86.85	39.00	173.46	7.35	1.29	**C0940-098-9500-S***	4.749	120.63	30.35	135.02	6.39	1.12
C0940-105-1375-M	0.940	23.88	0.105	2.67	1.375	34.93	0.743	18.88	0.663	16.85	47.19	209.91	74.70	13.07	**C0940-105-1375-S**	0.812	20.63	36.56	162.62	64.96	11.37
C0940-105-1500-M	0.940	23.88	0.105	2.67	1.500	38.10	0.801	20.33	0.711	18.06	47.19	209.91	67.47	11.81	**C0940-105-1500-S**	0.877	22.27	36.56	162.62	58.67	10.27
C0940-105-1625-M	0.940	23.88	0.105	2.67	1.625	41.28	0.858	21.79	0.758	19.27	47.19	209.91	61.51	10.76	**C0940-105-1625-S**	0.941	23.91	36.56	162.62	53.48	9.36
C0940-105-1750-M	0.940	23.88	0.105	2.67	1.750	44.45	0.915	23.24	0.806	20.47	47.19	209.91	56.51	9.89	**C0940-105-1750-S**	1.006	25.55	36.56	162.62	49.14	8.60
C0940-105-1875-M	0.940	23.88	0.105	2.67	1.875	47.63	0.972	24.69	0.854	21.68	47.19	209.91	52.27	9.15	**C0940-105-1875-S**	1.071	27.20	36.56	162.62	45.45	7.95
C0940-105-2000-M	0.940	23.88	0.105	2.67	2.000	50.80	1.029	26.15	0.901	22.89	47.19	209.91	48.62	8.51	**C0940-105-2000-S**	1.135	28.84	36.56	162.62	42.28	7.40
C0940-105-2125-M	0.940	23.88	0.105	2.67	2.125	53.98	1.087	27.60	0.949	24.09	47.19	209.91	45.45	7.95	**C0940-105-2125-S**	1.200	30.48	36.56	162.62	39.52	6.92
C0940-105-2250-M	0.940	23.88	0.105	2.67	2.250	57.15	1.144	29.05	0.996	25.30	47.19	209.91	42.66	7.47	**C0940-105-2250-S**	1.265	32.12	36.56	162.62	37.10	6.49
C0940-105-2375-M	0.940	23.88	0.105	2.67	2.375	60.33	1.201	30.51	1.044	26.51	47.19	209.91	40.20	7.03	**C0940-105-2375-S**	1.329	33.76	36.56	162.62	34.96	6.12
C0940-105-2500-M	0.940	23.88	0.105	2.67	2.500	63.50	1.258	31.96	1.091	27.72	47.19	209.91	38.00	6.65	**C0940-105-2500-S**	1.394	35.40	36.56	162.62	33.05	5.78
C0940-105-2625-M	0.940	23.88	0.105	2.67	2.625	66.68	1.316	33.41	1.139	28.92	47.19	209.91	36.04	6.31	**C0940-105-2625-S**	1.458	37.04	36.56	162.62	31.34	5.48
C0940-105-2750-M	0.940	23.88	0.105	2.67	2.750	69.85	1.373	34.87	1.186	30.13	47.19	209.91	34.26	6.00	**C0940-105-2750-S**	1.523	38.68	36.56	162.62	29.79	5.21
C0940-105-2875-M	0.940	23.88	0.105	2.67	2.875	73.03	1.430	36.32	1.234	31.34	47.19	209.91	32.66	5.71	**C0940-105-2875-S**	1.588	40.33	36.56	162.62	28.40	4.97

FOR INFORMATION ON ALTERNATIVE FINISHES, SEE PAGE 311

Part Numbers with an "*" are squared and not ground. **Part Numbers in bold** represent the newly expanded Associated Spring RAYMOND compression spring offering.

(OD) 0.940 - 0.940

MUSIC WIRE															STAINLESS STEEL						
Catalog #	Outside Diameter (OD)		Wire Diameter (d)		Free Length (L) Approx		Load Length (L_1)		Solid Height (Sh) Approx		Load (P) at L_1		Spring Rate (R)		Catalog #	Load Length (L_1)		Load (P) at L_1		Spring Rate (R)	
	in	mm	in	mm	in	mm	in	mm	in	mm	lb	N	lb/in	N/mm		in	mm	lb	N	lb/in	N/mm
C0940-105-3000-M	0.940	23.88	0.105	2.67	3.000	76.20	1.487	37.78	1.281	32.54	47.19	209.91	31.19	5.46	**C0940-105-3000-S**	1.652	41.97	36.56	162.62	27.13	4.75
C0940-105-3250-M	0.940	23.88	0.105	2.67	3.250	82.55	1.602	40.68	1.376	34.96	47.19	209.91	28.63	5.01	**C0940-105-3250-S**	1.781	45.25	36.56	162.62	24.89	4.36
C0940-105-3500-M	0.940	23.88	0.105	2.67	3.500	88.90	1.716	43.59	1.471	37.37	47.19	209.91	26.45	4.63	**C0940-105-3500-S**	1.911	48.53	36.56	162.62	23.00	4.03
C0940-105-3750-M	0.940	23.88	0.105	2.67	3.750	95.25	1.831	46.50	1.566	39.79	47.19	209.91	24.59	4.30	**C0940-105-3750-S**	2.040	51.81	36.56	162.62	21.38	3.74
C0940-105-4000-M	0.940	23.88	0.105	2.67	4.000	101.60	1.945	49.40	1.661	42.20	47.19	209.91	22.96	4.02	**C0940-105-4000-S**	2.169	55.10	36.56	162.62	19.97	3.49
C0940-105-4250-M	0.940	23.88	0.105	2.67	4.250	107.95	2.059	52.31	1.757	44.62	47.19	209.91	21.54	3.77	**C0940-105-4250-S**	2.298	58.38	36.56	162.62	18.73	3.28
C0940-105-4500-M	0.940	23.88	0.105	2.67	4.500	114.30	2.174	55.22	1.852	47.03	47.19	209.91	20.29	3.55	**C0940-105-4500-S**	2.428	61.66	36.56	162.62	17.64	3.09
C0940-105-4750-M	0.940	23.88	0.105	2.67	4.750	120.65	2.288	58.12	1.947	49.44	47.19	209.91	19.17	3.35	**C0940-105-4750-S**	2.557	64.94	36.56	162.62	16.67	2.92
C0940-105-5000-M	0.940	23.88	0.105	2.67	5.000	127.00	2.403	61.03	2.042	51.86	47.19	209.91	18.17	3.18	**C0940-105-5000-S**	2.686	68.23	36.56	162.62	15.80	2.76
C0940-105-5250-M	0.940	23.88	0.105	2.67	5.250	133.35	2.517	63.94	2.137	54.27	47.19	209.91	17.27	3.02	**C0940-105-5250-S**	2.815	71.51	36.56	162.62	15.02	2.63
C0940-105-5500-M	0.940	23.88	0.105	2.67	5.500	139.70	2.632	66.84	2.232	56.69	47.19	209.91	16.45	2.88	**C0940-105-5500-S**	2.945	74.79	36.56	162.62	14.31	2.50
C0940-105-5750-M	0.940	23.88	0.105	2.67	5.750	146.05	2.746	69.75	2.327	59.10	47.19	209.91	15.71	2.75	**C0940-105-5750-S**	3.074	78.07	36.56	162.62	13.66	2.39
C0940-105-6000-M	0.940	23.88	0.105	2.67	6.000	152.40	2.861	72.66	2.422	61.52	47.19	209.91	15.03	2.63	**C0940-105-6000-S**	3.203	81.36	36.56	162.62	13.07	2.29
C0940-105-6250-M	0.940	23.88	0.105	2.67	6.250	158.75	2.975	75.57	2.517	63.93	47.19	209.91	14.41	2.52	**C0940-105-6250-S**	3.332	84.64	36.56	162.62	12.53	2.19
C0940-105-6500-M	0.940	23.88	0.105	2.67	6.500	165.10	3.089	78.47	2.612	66.34	47.19	209.91	13.84	2.42	**C0940-105-6500-S**	3.461	87.92	36.56	162.62	12.03	2.11
C0940-105-6750-M	0.940	23.88	0.105	2.67	6.750	171.45	3.204	81.38	2.707	68.76	47.19	209.91	13.31	2.33	**C0940-105-6750-S**	3.591	91.20	36.56	162.62	11.57	2.03
C0940-105-7000-M	0.940	23.88	0.105	2.67	7.000	177.80	3.318	84.29	2.802	71.17	47.19	209.91	12.82	2.24	**C0940-105-7000-S**	3.720	94.49	36.56	162.62	11.15	1.95
C0940-105-7500-M	0.940	23.88	0.105	2.67	7.500	190.50	3.547	90.10	2.992	76.00	47.19	209.91	11.94	2.09	**C0940-105-7500-S**	3.978	101.05	36.56	162.62	10.38	1.82
C0940-105-8000-M	0.940	23.88	0.105	2.67	8.000	203.20	3.776	95.91	3.182	80.83	47.19	209.91	11.17	1.96	**C0940-105-8000-S**	4.237	107.62	36.56	162.62	9.72	1.70
C0940-105-8500-M	0.940	23.88	0.105	2.67	8.500	215.90	4.005	101.73	3.372	85.66	47.19	209.91	10.50	1.84	**C0940-105-8500-S**	4.495	114.18	36.56	162.62	9.13	1.60
C0940-105-9000-M	0.940	23.88	0.105	2.67	9.000	228.60	4.234	107.54	3.562	90.49	47.19	209.91	9.90	1.73	**C0940-105-9000-S**	4.754	120.75	36.56	162.62	8.61	1.51
C0940-105-9500-M	0.940	23.88	0.105	2.67	9.500	241.30	4.463	113.36	3.753	95.32	47.19	209.91	9.37	1.64	**C0940-105-9500-S**	5.012	127.31	36.56	162.62	8.15	1.43
C0940-112-1375-M	0.940	23.88	0.112	2.85	1.375	34.93	0.790	20.07	0.721	18.32	56.38	250.79	96.40	16.87	**C0940-112-1375-S**	0.857	21.76	43.46	193.34	83.83	14.67
C0940-112-1500-M	0.940	23.88	0.112	2.85	1.500	38.10	0.852	21.63	0.774	19.66	56.38	250.79	86.96	15.22	**C0940-112-1500-S**	0.925	23.50	43.46	193.34	75.62	13.23
C0940-112-1625-M	0.940	23.88	0.112	2.85	1.625	41.28	0.913	23.19	0.827	21.00	56.38	250.79	79.20	13.86	**C0940-112-1625-S**	0.994	25.24	43.46	193.34	68.87	12.05
C0940-112-1750-M	0.940	23.88	0.112	2.85	1.750	44.45	0.975	24.75	0.880	22.34	56.38	250.79	72.71	12.72	**C0940-112-1750-S**	1.063	26.99	43.46	193.34	63.23	11.06
C0940-112-1875-M	0.940	23.88	0.112	2.85	1.875	47.63	1.036	26.32	0.932	23.68	56.38	250.79	67.21	11.76	**C0940-112-1875-S**	1.131	28.73	43.46	193.34	58.44	10.23
C0940-112-2000-M	0.940	23.88	0.112	2.85	2.000	50.80	1.098	27.88	0.985	25.03	56.38	250.79	62.48	10.93	**C0940-112-2000-S**	1.200	30.48	43.46	193.34	54.33	9.51
C0940-112-2125-M	0.940	23.88	0.112	2.85	2.125	53.98	1.159	29.44	1.038	26.37	56.38	250.79	58.37	10.21	**C0940-112-2125-S**	1.269	32.22	43.46	193.34	50.76	8.88
C0940-112-2250-M	0.940	23.88	0.112	2.85	2.250	57.15	1.221	31.00	1.091	27.71	56.38	250.79	54.77	9.58	**C0940-112-2250-S**	1.337	33.97	43.46	193.34	47.62	8.33
C0940-112-2375-M	0.940	23.88	0.112	2.85	2.375	60.33	1.282	32.56	1.144	29.05	56.38	250.79	51.58	9.03	**C0940-112-2375-S**	1.406	35.71	43.46	193.34	44.86	7.85
C0940-112-2500-M	0.940	23.88	0.112	2.85	2.500	63.50	1.344	34.13	1.196	30.39	56.38	250.79	48.75	8.53	**C0940-112-2500-S**	1.475	37.46	43.46	193.34	42.39	7.42
C0940-112-2625-M	0.940	23.88	0.112	2.85	2.625	66.68	1.405	35.69	1.249	31.73	56.38	250.79	46.21	8.09	**C0940-112-2625-S**	1.543	39.20	43.46	193.34	40.19	7.03
C0940-112-2750-M	0.940	23.88	0.112	2.85	2.750	69.85	1.466	37.25	1.302	33.07	56.38	250.79	43.93	7.69	**C0940-112-2750-S**	1.612	40.95	43.46	193.34	38.20	6.68
C0940-112-2875-M	0.940	23.88	0.112	2.85	2.875	73.03	1.528	38.81	1.355	34.41	56.38	250.79	41.86	7.32	**C0940-112-2875-S**	1.681	42.69	43.46	193.34	36.40	6.37
C0940-112-3000-M	0.940	23.88	0.112	2.85	3.000	76.20	1.589	40.37	1.408	35.75	56.38	250.79	39.97	6.99	**C0940-112-3000-S**	1.749	44.44	43.46	193.34	34.76	6.08
C0940-112-3250-M	0.940	23.88	0.112	2.85	3.250	82.55	1.712	43.50	1.513	38.43	56.38	250.79	36.67	6.42	**C0940-112-3250-S**	1.887	47.93	43.46	193.34	31.89	5.58
C0940-112-3500-M	0.940	23.88	0.112	2.85	3.500	88.90	1.835	46.62	1.619	41.12	56.38	250.79	33.87	5.93	**C0940-112-3500-S**	2.024	51.42	43.46	193.34	29.45	5.15
C0940-112-3750-M	0.940	23.88	0.112	2.85	3.750	95.25	1.958	49.74	1.724	43.80	56.38	250.79	31.47	5.51	**C0940-112-3750-S**	2.162	54.91	43.46	193.34	27.36	4.79
C0940-112-4000-M	0.940	23.88	0.112	2.85	4.000	101.60	2.081	52.87	1.830	46.48	56.38	250.79	29.39	5.14	**C0940-112-4000-S**	2.299	58.39	43.46	193.34	25.55	4.47
C0940-112-4250-M	0.940	23.88	0.112	2.85	4.250	107.95	2.204	55.99	1.935	49.16	56.38	250.79	27.56	4.82	**C0940-112-4250-S**	2.436	61.88	43.46	193.34	23.97	4.19
C0940-112-4500-M	0.940	23.88	0.112	2.85	4.500	114.30	2.327	59.11	2.041	51.84	56.38	250.79	25.95	4.54	**C0940-112-4500-S**	2.574	65.37	43.46	193.34	22.56	3.95
C0940-112-4750-M	0.940	23.88	0.112	2.85	4.750	120.65	2.450	62.24	2.147	54.52	56.38	250.79	24.52	4.29	**C0940-112-4750-S**	2.711	68.86	43.46	193.34	21.32	3.73
C0940-112-5000-M	0.940	23.88	0.112	2.85	5.000	127.00	2.573	65.36	2.252	57.21	56.38	250.79	23.23	4.07	**C0940-112-5000-S**	2.849	72.35	43.46	193.34	20.20	3.54
C0940-112-5250-M	0.940	23.88	0.112	2.85	5.250	133.35	2.696	68.48	2.358	59.89	56.38	250.79	22.08	3.86	**C0940-112-5250-S**	2.986	75.84	43.46	193.34	19.20	3.36
C0940-112-5500-M	0.940	23.88	0.112	2.85	5.500	139.70	2.819	71.61	2.463	62.57	56.38	250.79	21.03	3.68	**C0940-112-5500-S**	3.123	79.33	43.46	193.34	18.29	3.20
C0940-112-5750-M	0.940	23.88	0.112	2.85	5.750	146.05	2.942	74.73	2.569	65.25	56.38	250.79	20.08	3.51	**C0940-112-5750-S**	3.261	82.82	43.46	193.34	17.46	3.06
C0940-112-6000-M	0.940	23.88	0.112	2.85	6.000	152.40	3.065	77.85	2.675	67.93	56.38	250.79	19.21	3.36	**C0940-112-6000-S**	3.398	86.31	43.46	193.34	16.70	2.92
C0940-112-6250-M	0.940	23.88	0.112	2.85	6.250	158.75	3.188	80.98	2.780	70.61	56.38	250.79	18.41	3.22	**C0940-112-6250-S**	3.535	89.80	43.46	193.34	16.01	2.80
C0940-112-6500-M	0.940	23.88	0.112	2.85	6.500	165.10	3.311	84.10	2.886	73.30	56.38	250.79	17.68	3.09	**C0940-112-6500-S**	3.673	93.29	43.46	193.34	15.37	2.69
C0940-112-6750-M	0.940	23.88	0.112	2.85	6.750	171.45	3.434	87.22	2.991	75.98	56.38	250.79	17.00	2.98	**C0940-112-6750-S**	3.810	96.78	43.46	193.34	14.79	2.59
C0940-112-7000-M	0.940	23.88	0.112	2.85	7.000	177.80	3.557	90.35	3.097	78.66	56.38	250.79	16.38	2.87	**C0940-112-7000-S**	3.948	100.27	43.46	193.34	14.24	2.49
C0940-112-7500-M	0.940	23.88	0.112	2.85	7.500	190.50	3.803	96.59	3.308	84.02	56.38	250.79	15.25	2.67	**C0940-112-7500-S**	4.222	107.25	43.46	193.34	13.26	2.32
C0940-112-8000-M	0.940	23.88	0.112	2.85	8.000	203.20	4.049	102.84	3.519	89.39	56.38	250.79	14.27	2.50	**C0940-112-8000-S**	4.497	114.23	43.46	193.34	12.41	2.17
C0940-112-8500-M	0.940	23.88	0.112	2.85	8.500	215.90	4.295	109.09	3.730	94.75	56.38	250.79	13.41	2.35	**C0940-112-8500-S**	4.772	121.21	43.46	193.34	11.66	2.04
C0940-112-9000-M	0.940	23.88	0.112	2.85	9.000	228.60	4.541	115.33	3.941	100.11	56.38	250.79	12.64	2.21	**C0940-112-9000-S**	5.047	128.18	43.46	193.34	10.99	1.92
C0940-112-9500-M	0.940	23.88	0.112	2.85	9.500	241.30	4.787	121.58	4.153	105.48	56.38	250.79	11.96	2.09	**C0940-112-9500-S**	5.321	135.16	43.46	193.34	10.40	1.82
C0940-125-1375-M	0.940	23.88	0.125	3.18	1.375	34.93	0.873	22.17	0.823	20.91	76.23	339.10	151.76	26.56	**C0940-125-1375-S**	0.934	23.72	58.22	258.95	131.96	23.09
C0940-125-1500-M	0.940	23.88	0.125	3.18	1.500	38.10	0.942	23.92	0.886	22.49	76.23	339.10	136.58	23.90	**C0940-125-1500-S**	1.010	25.65	58.22	258.95	118.77	20.78
C0940-125-1625-M	0.940	23.88	0.125	3.18	1.625	41.28	1.011	25.68	0.948	24.07	76.23	339.10	124.16	21.73	**C0940-125-1625-S**	1.086	27.58	58.22	258.95	107.97	18.89
C0940-125-1750-M	0.940	23.88	0.125	3.18	1.750	44.45	1.080	27.44	1.010	25.66	76.23	339.10	113.82	19.92	**C0940-125-1750-S**	1.162	29.51	58.22	258.95	98.97	17.32
C0940-125-1875-M	0.940	23.88	0.125	3.18	1.875	47.63	1.149	29.19	1.072	27.24	76.23	339.10	105.06	18.39	**C0940-125-1875-S**	1.238	31.44	58.22	258.95	91.36	15.99
C0940-125-2000-M	0.940	23.88	0.125	3.18	2.000	50.80	1.219	30.95	1.135	28.82	76.23	339.10	97.56	17.07	**C0940-125-2000-S**	1.314	33.37	58.22	258.95	84.83	14.85
C0940-125-2125-M	0.940	23.88	0.125	3.18	2.125	53.98	1.288	32.71	1.197	30.40	76.23	339.10	91.05	15.93	**C0940-125-2125-S**	1.390	35.30	58.22	258.95	79.18	13.86

Part Numbers with an "*" are squared and not ground. **Part Numbers in bold** represent the newly expanded Associated Spring RAYMOND compression spring offering.

MUSIC WIRE															STAINLESS STEEL						
Catalog #	Outside Diameter (OD)		Wire Diameter (d)		Free Length (L) Approx		Load Length (L_1)		Solid Height (Sh) Approx		Load (P) at L_1		Spring Rate (R)		Catalog #	Load Length (L_1)		Load (P) at L_1		Spring Rate (R)	
	in	mm	in	mm	in	mm	in	mm	in	mm	lb	N	lb/in	N/mm		in	mm	lb	N	lb/in	N/mm
C0940-125-2250-M	0.940	23.88	0.125	3.18	2.250	57.15	1.357	34.47	1.259	31.99	76.23	339.10	85.36	14.94	**C0940-125-2250-S**	1.466	37.23	58.22	258.95	74.23	12.99
C0940-125-2375-M	0.940	23.88	0.125	3.18	2.375	60.33	1.426	36.22	1.322	33.57	76.23	339.10	80.34	14.06	**C0940-125-2375-S**	1.542	39.16	58.22	258.95	69.86	12.23
C0940-125-2500-M	0.940	23.88	0.125	3.18	2.500	63.50	1.495	37.98	1.384	35.15	76.23	339.10	75.88	13.28	**C0940-125-2500-S**	1.618	41.09	58.22	258.95	65.98	11.55
C0940-125-2625-M	0.940	23.88	0.125	3.18	2.625	66.68	1.564	39.74	1.446	36.73	76.23	339.10	71.88	12.58	**C0940-125-2625-S**	1.694	43.02	58.22	258.95	62.51	10.94
C0940-125-2750-M	0.940	23.88	0.125	3.18	2.750	69.85	1.634	41.50	1.509	38.32	76.23	339.10	68.29	11.95	**C0940-125-2750-S**	1.770	44.95	58.22	258.95	59.38	10.39
C0940-125-2875-M	0.940	23.88	0.125	3.18	2.875	73.03	1.703	43.25	1.571	39.90	76.23	339.10	65.04	11.38	**C0940-125-2875-S**	1.846	46.88	58.22	258.95	56.56	9.90
C0940-125-3000-M	0.940	23.88	0.125	3.18	3.000	76.20	1.772	45.01	1.633	41.48	76.23	339.10	62.08	10.86	**C0940-125-3000-S**	1.922	48.81	58.22	258.95	53.98	9.45
C0940-125-3250-M	0.940	23.88	0.125	3.18	3.250	82.55	1.910	48.52	1.758	44.65	76.23	339.10	56.91	9.96	**C0940-125-3250-S**	2.074	52.67	58.22	258.95	49.49	8.66
C0940-125-3500-M	0.940	23.88	0.125	3.18	3.500	88.90	2.049	52.04	1.882	47.81	76.23	339.10	52.53	9.19	**C0940-125-3500-S**	2.226	56.53	58.22	258.95	45.68	7.99
C0940-125-3750-M	0.940	23.88	0.125	3.18	3.750	95.25	2.187	55.55	2.007	50.98	76.23	339.10	48.78	8.54	**C0940-125-3750-S**	2.378	60.39	58.22	258.95	42.42	7.42
C0940-125-4000-M	0.940	23.88	0.125	3.18	4.000	101.60	2.326	59.07	2.132	54.14	76.23	339.10	45.53	7.97	**C0940-125-4000-S**	2.529	64.25	58.22	258.95	39.59	6.93
C0940-125-4250-M	0.940	23.88	0.125	3.18	4.250	107.95	2.464	62.58	2.256	57.31	76.23	339.10	42.68	7.47	**C0940-125-4250-S**	2.681	68.11	58.22	258.95	37.11	6.49
C0940-125-4500-M	0.940	23.88	0.125	3.18	4.500	114.30	2.602	66.10	2.381	60.47	76.23	339.10	40.17	7.03	**C0940-125-4500-S**	2.833	71.97	58.22	258.95	34.93	6.11
C0940-125-4750-M	0.940	23.88	0.125	3.18	4.750	120.65	2.741	69.61	2.505	63.63	76.23	339.10	37.94	6.64	**C0940-125-4750-S**	2.985	75.83	58.22	258.95	32.99	5.77
C0940-125-5000-M	0.940	23.88	0.125	3.18	5.000	127.00	2.879	73.13	2.630	66.80	76.23	339.10	35.94	6.29	**C0940-125-5000-S**	3.137	79.69	58.22	258.95	31.25	5.47
C0940-125-5250-M	0.940	23.88	0.125	3.18	5.250	133.35	3.017	76.64	2.755	69.96	76.23	339.10	34.15	5.98	**C0940-125-5250-S**	3.289	83.55	58.22	258.95	29.69	5.20
C0940-125-5500-M	0.940	23.88	0.125	3.18	5.500	139.70	3.156	80.15	2.879	73.13	76.23	339.10	32.52	5.69	**C0940-125-5500-S**	3.441	87.41	58.22	258.95	28.28	4.95
C0940-125-5750-M	0.940	23.88	0.125	3.18	5.750	146.05	3.294	83.67	3.004	76.29	76.23	339.10	31.04	5.43	**C0940-125-5750-S**	3.593	91.27	58.22	258.95	26.99	4.72
C0940-125-6000-M	0.940	23.88	0.125	3.18	6.000	152.40	3.432	87.18	3.128	79.46	76.23	339.10	29.69	5.20	**C0940-125-6000-S**	3.745	95.13	58.22	258.95	25.82	4.52
C0940-125-6250-M	0.940	23.88	0.125	3.18	6.250	158.75	3.571	90.70	3.253	82.62	76.23	339.10	28.45	4.98	**C0940-125-6250-S**	3.897	98.99	58.22	258.95	24.74	4.33
C0940-125-6500-M	0.940	23.88	0.125	3.18	6.500	165.10	3.709	94.21	3.378	85.79	76.23	339.10	27.32	4.78	**C0940-125-6500-S**	4.049	102.85	58.22	258.95	23.75	4.16
C0940-125-6750-M	0.940	23.88	0.125	3.18	6.750	171.45	3.848	97.73	3.502	88.95	76.23	339.10	26.27	4.60	**C0940-125-6750-S**	4.201	106.71	58.22	258.95	22.84	4.00
C0940-125-7000-M	0.940	23.88	0.125	3.18	7.000	177.80	3.986	101.24	3.627	92.12	76.23	339.10	25.29	4.43	**C0940-125-7000-S**	4.353	110.57	58.22	258.95	21.99	3.85
C0940-125-7500-M	0.940	23.88	0.125	3.18	7.500	190.50	4.263	108.27	3.876	98.45	76.23	339.10	23.55	4.12	**C0940-125-7500-S**	4.657	118.29	58.22	258.95	20.48	3.58
C0940-125-8000-M	0.940	23.88	0.125	3.18	8.000	203.20	4.539	115.30	4.125	104.78	76.23	339.10	22.03	3.86	**C0940-125-8000-S**	4.961	126.01	58.22	258.95	19.16	3.35
C0940-125-8500-M	0.940	23.88	0.125	3.18	8.500	215.90	4.816	122.33	4.374	111.11	76.23	339.10	20.69	3.62	**C0940-125-8500-S**	5.265	133.73	58.22	258.95	18.00	3.15
C0940-125-9000-M	0.940	23.88	0.125	3.18	9.000	228.60	5.093	129.36	4.624	117.44	76.23	339.10	19.51	3.41	**C0940-125-9000-S**	5.569	141.45	58.22	258.95	16.97	2.97
C0940-125-9500-M	0.940	23.88	0.125	3.18	9.500	241.30	5.370	136.39	4.873	123.77	76.23	339.10	18.46	3.23	**C0940-125-9500-S**	5.873	149.17	58.22	258.95	16.05	2.81
C0940-135-1375-M	0.940	23.88	0.135	3.43	1.375	34.93	0.931	23.65	0.895	22.75	94.09	418.53	212.00	37.10	**C0940-135-1375-S**	0.988	25.10	71.31	317.22	184.35	32.26
C0940-135-1500-M	0.940	23.88	0.135	3.43	1.500	38.10	1.006	25.55	0.965	24.50	94.09	418.53	190.45	33.33	**C0940-135-1500-S**	1.069	27.16	71.31	317.22	165.61	28.98
C0940-135-1625-M	0.940	23.88	0.135	3.43	1.625	41.28	1.081	27.45	1.034	26.26	94.09	418.53	172.88	30.25	**C0940-135-1625-S**	1.151	29.23	71.31	317.22	150.33	26.31
C0940-135-1750-M	0.940	23.88	0.135	3.43	1.750	44.45	1.156	29.35	1.103	28.02	94.09	418.53	158.28	27.70	**C0940-135-1750-S**	1.232	31.29	71.31	317.22	137.64	24.09
C0940-135-1875-M	0.940	23.88	0.135	3.43	1.875	47.63	1.230	31.25	1.172	29.78	94.09	418.53	145.95	25.54	**C0940-135-1875-S**	1.313	33.35	71.31	317.22	126.92	22.21
C0940-135-2000-M	0.940	23.88	0.135	3.43	2.000	50.80	1.305	33.15	1.242	31.54	94.09	418.53	135.41	23.70	**C0940-135-2000-S**	1.394	35.42	71.31	317.22	117.75	20.61
C0940-135-2125-M	0.940	23.88	0.135	3.43	2.125	53.98	1.380	35.05	1.311	33.30	94.09	418.53	126.28	22.10	**C0940-135-2125-S**	1.476	37.48	71.31	317.22	109.81	19.22
C0940-135-2250-M	0.940	23.88	0.135	3.43	2.250	57.15	1.455	36.95	1.380	35.05	94.09	418.53	118.31	20.70	**C0940-135-2250-S**	1.557	39.54	71.31	317.22	102.88	18.00
C0940-135-2375-M	0.940	23.88	0.135	3.43	2.375	60.33	1.530	38.85	1.449	36.81	94.09	418.53	111.29	19.48	**C0940-135-2375-S**	1.638	41.61	71.31	317.22	96.77	16.93
C0940-135-2500-M	0.940	23.88	0.135	3.43	2.500	63.50	1.604	40.75	1.519	38.57	94.09	418.53	105.05	18.38	**C0940-135-2500-S**	1.719	43.67	71.31	317.22	91.35	15.99
C0940-135-2625-M	0.940	23.88	0.135	3.43	2.625	66.68	1.679	42.65	1.588	40.33	94.09	418.53	99.47	17.41	**C0940-135-2625-S**	1.801	45.73	71.31	317.22	86.50	15.14
C0940-135-2750-M	0.940	23.88	0.135	3.43	2.750	69.85	1.754	44.55	1.657	42.09	94.09	418.53	94.46	16.53	**C0940-135-2750-S**	1.882	47.80	71.31	317.22	82.14	14.37
C0940-135-2875-M	0.940	23.88	0.135	3.43	2.875	73.03	1.829	46.45	1.726	43.85	94.09	418.53	89.93	15.74	**C0940-135-2875-S**	1.963	49.86	71.31	317.22	78.20	13.68
C0940-135-3000-M	0.940	23.88	0.135	3.43	3.000	76.20	1.903	48.35	1.795	45.61	94.09	418.53	85.81	15.02	**C0940-135-3000-S**	2.044	51.92	71.31	317.22	74.62	13.06
C0940-135-3250-M	0.940	23.88	0.135	3.43	3.250	82.55	2.053	52.15	1.934	49.12	94.09	418.53	78.61	13.76	**C0940-135-3250-S**	2.207	56.05	71.31	317.22	68.36	11.96
C0940-135-3500-M	0.940	23.88	0.135	3.43	3.500	88.90	2.203	55.95	2.072	52.64	94.09	418.53	72.53	12.69	**C0940-135-3500-S**	2.369	60.18	71.31	317.22	63.07	11.04
C0940-135-3750-M	0.940	23.88	0.135	3.43	3.750	95.25	2.352	59.75	2.211	56.16	94.09	418.53	67.32	11.78	**C0940-135-3750-S**	2.532	64.30	71.31	317.22	58.54	10.24
C0940-135-4000-M	0.940	23.88	0.135	3.43	4.000	101.60	2.502	63.55	2.349	59.67	94.09	418.53	62.80	10.99	**C0940-135-4000-S**	2.694	68.43	71.31	317.22	54.61	9.56
C0940-135-4250-M	0.940	23.88	0.135	3.43	4.250	107.95	2.651	67.35	2.488	63.19	94.09	418.53	58.86	10.30	**C0940-135-4250-S**	2.857	72.56	71.31	317.22	51.18	8.96
C0940-135-4500-M	0.940	23.88	0.135	3.43	4.500	114.30	2.801	71.15	2.626	66.71	94.09	418.53	55.38	9.69	**C0940-135-4500-S**	3.019	76.69	71.31	317.22	48.16	8.43
C0940-135-4750-M	0.940	23.88	0.135	3.43	4.750	120.65	2.951	74.95	2.765	70.22	94.09	418.53	52.29	9.15	**C0940-135-4750-S**	3.182	80.81	71.31	317.22	45.47	7.96
C0940-135-5000-M	0.940	23.88	0.135	3.43	5.000	127.00	3.100	78.74	2.903	73.74	94.09	418.53	49.53	8.67	**C0940-135-5000-S**	3.344	84.94	71.31	317.22	43.07	7.54
C0940-135-5250-M	0.940	23.88	0.135	3.43	5.250	133.35	3.250	82.54	3.042	77.26	94.09	418.53	47.04	8.23	**C0940-135-5250-S**	3.507	89.07	71.31	317.22	40.90	7.16
C0940-135-5500-M	0.940	23.88	0.135	3.43	5.500	139.70	3.399	86.34	3.180	80.77	94.09	418.53	44.79	7.84	**C0940-135-5500-S**	3.669	93.19	71.31	317.22	38.95	6.82
C0940-135-5750-M	0.940	23.88	0.135	3.43	5.750	146.05	3.549	90.14	3.319	84.29	94.09	418.53	42.75	7.48	**C0940-135-5750-S**	3.831	97.32	71.31	317.22	37.17	6.51
C0940-135-6000-M	0.940	23.88	0.135	3.43	6.000	152.40	3.699	93.94	3.457	87.81	94.09	418.53	40.88	7.15	**C0940-135-6000-S**	3.994	101.45	71.31	317.22	35.55	6.22
C0940-135-6250-M	0.940	23.88	0.135	3.43	6.250	158.75	3.848	97.74	3.595	91.33	94.09	418.53	39.17	6.86	**C0940-135-6250-S**	4.156	105.57	71.31	317.22	34.06	5.96
C0940-135-6500-M	0.940	23.88	0.135	3.43	6.500	165.10	3.998	101.54	3.734	94.84	94.09	418.53	37.60	6.58	**C0940-135-6500-S**	4.319	109.70	71.31	317.22	32.70	5.72
C0940-135-6750-M	0.940	23.88	0.135	3.43	6.750	171.45	4.147	105.34	3.872	98.36	94.09	418.53	36.15	6.33	**C0940-135-6750-S**	4.481	113.83	71.31	317.22	31.44	5.50
C0940-135-7000-M	0.940	23.88	0.135	3.43	7.000	177.80	4.297	109.14	4.011	101.88	94.09	418.53	34.81	6.09	**C0940-135-7000-S**	4.644	117.95	71.31	317.22	30.27	5.30
C0940-135-7500-M	0.940	23.88	0.135	3.43	7.500	190.50	4.596	116.74	4.288	108.91	94.09	418.53	32.40	5.67	**C0940-135-7500-S**	4.969	126.21	71.31	317.22	28.17	4.93
C0940-135-8000-M	0.940	23.88	0.135	3.43	8.000	203.20	4.895	124.34	4.565	115.94	94.09	418.53	30.31	5.30	**C0940-135-8000-S**	5.294	134.46	71.31	317.22	26.35	4.61
C0940-135-8500-M	0.940	23.88	0.135	3.43	8.500	215.90	5.194	131.94	4.842	122.98	94.09	418.53	28.46	4.98	**C0940-135-8500-S**	5.619	142.72	71.31	317.22	24.75	4.33
C0940-135-9000-M	0.940	23.88	0.135	3.43	9.000	228.60	5.494	139.54	5.119	130.01	94.09	418.53	26.83	4.70	**C0940-135-9000-S**	5.944	150.97	71.31	317.22	23.33	4.08
C0940-135-9500-M	0.940	23.88	0.135	3.43	9.500	241.30	5.793	147.14	5.395	137.04	94.09	418.53	25.38	4.44	**C0940-135-9500-S**	6.269	159.22	71.31	317.22	22.07	3.86
C0940-148-1375-M	0.940	23.88	0.148	3.76	1.375	34.93	1.000	25.40	0.980	24.90	120.83	537.46	322.16	56.38	**C0940-148-1375-S**	1.051	26.70	90.68	403.36	280.14	49.02

FOR INFORMATION ON ALTERNATIVE FINISHES, SEE PAGE 311

Part Numbers with an "*" are squared and not ground. **Part Numbers in bold** represent the newly expanded Associated Spring RAYMOND compression spring offering.

MUSIC WIRE																STAINLESS STEEL						
Catalog #	Outside Diameter (OD)		Wire Diameter (d)		Free Length (L) Approx		Load Length (L_1)		Solid Height (Sh) Approx		Load (P) at L_1		Spring Rate (R)		Catalog #	Load Length (L_1)		Load (P) at L_1		Spring Rate (R)	
	in	mm	in	mm	in	mm	in	mm	in	mm	lb	N	lb/in	N/mm		in	mm	lb	N	lb/in	N/mm
C0940-148-1500-M	0.940	23.88	0.148	3.76	1.500	38.10	1.082	27.47	1.058	26.87	120.83	537.46	288.72	50.53	**C0940-148-1500-S**	1.139	28.93	90.68	403.36	251.06	43.93
C0940-148-1625-M	0.940	23.88	0.148	3.76	1.625	41.28	1.163	29.54	1.136	28.84	120.83	537.46	261.56	45.77	**C0940-148-1625-S**	1.226	31.15	90.68	403.36	227.44	39.80
C0940-148-1750-M	0.940	23.88	0.148	3.76	1.750	44.45	1.245	31.61	1.213	30.82	120.83	537.46	239.07	41.84	**C0940-148-1750-S**	1.314	33.37	90.68	403.36	207.89	36.38
C0940-148-1875-M	0.940	23.88	0.148	3.76	1.875	47.63	1.326	33.68	1.291	32.79	120.83	537.46	220.15	38.53	**C0940-148-1875-S**	1.401	35.59	90.68	403.36	191.43	33.50
C0940-148-2000-M	0.940	23.88	0.148	3.76	2.000	50.80	1.408	35.76	1.368	34.76	120.83	537.46	204.00	35.70	**C0940-148-2000-S**	1.489	37.82	90.68	403.36	177.39	31.04
C0940-148-2125-M	0.940	23.88	0.148	3.76	2.125	53.98	1.489	37.83	1.446	36.73	120.83	537.46	190.06	33.26	**C0940-148-2125-S**	1.576	40.04	90.68	403.36	165.27	28.92
C0940-148-2250-M	0.940	23.88	0.148	3.76	2.250	57.15	1.571	39.90	1.524	38.70	120.83	537.46	177.90	31.13	**C0940-148-2250-S**	1.664	42.26	90.68	403.36	154.69	27.07
C0940-148-2375-M	0.940	23.88	0.148	3.76	2.375	60.33	1.652	41.97	1.601	40.67	120.83	537.46	167.20	29.26	**C0940-148-2375-S**	1.751	44.48	90.68	403.36	145.39	25.44
C0940-148-2500-M	0.940	23.88	0.148	3.76	2.500	63.50	1.734	44.04	1.679	42.64	120.83	537.46	157.72	27.60	**C0940-148-2500-S**	1.839	46.71	90.68	403.36	137.15	24.00
C0940-148-2625-M	0.940	23.88	0.148	3.76	2.625	66.68	1.815	46.11	1.756	44.61	120.83	537.46	149.26	26.12	**C0940-148-2625-S**	1.926	48.93	90.68	403.36	129.79	22.71
C0940-148-2750-M	0.940	23.88	0.148	3.76	2.750	69.85	1.897	48.18	1.834	46.58	120.83	537.46	141.65	24.79	**C0940-148-2750-S**	2.014	51.15	90.68	403.36	123.18	21.56
C0940-148-2875-M	0.940	23.88	0.148	3.76	2.875	73.03	1.979	50.26	1.911	48.55	120.83	537.46	134.79	23.59	**C0940-148-2875-S**	2.101	53.37	90.68	403.36	117.21	20.51
C0940-148-3000-M	0.940	23.88	0.148	3.76	3.000	76.20	2.060	52.33	1.989	50.52	120.83	537.46	128.56	22.50	**C0940-148-3000-S**	2.189	55.60	90.68	403.36	111.79	19.56
C0940-148-3250-M	0.940	23.88	0.148	3.76	3.250	82.55	2.223	56.47	2.144	54.46	120.83	537.46	117.68	20.59	**C0940-148-3250-S**	2.364	60.04	90.68	403.36	102.33	17.91
C0940-148-3500-M	0.940	23.88	0.148	3.76	3.500	88.90	2.386	60.61	2.299	58.40	120.83	537.46	108.49	18.99	**C0940-148-3500-S**	2.539	64.49	90.68	403.36	94.34	16.51
C0940-148-3750-M	0.940	23.88	0.148	3.76	3.750	95.25	2.549	64.76	2.454	62.34	120.83	537.46	100.64	17.61	**C0940-148-3750-S**	2.714	68.93	90.68	403.36	87.51	15.31
C0940-148-4000-M	0.940	23.88	0.148	3.76	4.000	101.60	2.713	68.90	2.610	66.28	120.83	537.46	93.85	16.42	**C0940-148-4000-S**	2.889	73.38	90.68	403.36	81.61	14.28
C0940-148-4250-M	0.940	23.88	0.148	3.76	4.250	107.95	2.876	73.04	2.765	70.23	120.83	537.46	87.91	15.38	**C0940-148-4250-S**	3.064	77.82	90.68	403.36	76.45	13.38
C0940-148-4500-M	0.940	23.88	0.148	3.76	4.500	114.30	3.039	77.18	2.920	74.17	120.83	537.46	82.69	14.47	**C0940-148-4500-S**	3.239	82.27	90.68	403.36	71.90	12.58
C0940-148-4750-M	0.940	23.88	0.148	3.76	4.750	120.65	3.202	81.33	3.075	78.11	120.83	537.46	78.05	13.66	**C0940-148-4750-S**	3.414	86.71	90.68	403.36	67.87	11.88
C0940-148-5000-M	0.940	23.88	0.148	3.76	5.000	127.00	3.365	85.47	3.230	82.05	120.83	537.46	73.90	12.93	**C0940-148-5000-S**	3.589	91.16	90.68	403.36	64.26	11.25
C0940-148-5250-M	0.940	23.88	0.148	3.76	5.250	133.35	3.528	89.61	3.385	85.99	120.83	537.46	70.17	12.28	**C0940-148-5250-S**	3.764	95.60	90.68	403.36	61.02	10.68
C0940-148-5500-M	0.940	23.88	0.148	3.76	5.500	139.70	3.691	93.76	3.541	89.93	120.83	537.46	66.80	11.69	**C0940-148-5500-S**	3.939	100.05	90.68	403.36	58.09	10.16
C0940-148-5750-M	0.940	23.88	0.148	3.76	5.750	146.05	3.854	97.90	3.696	93.87	120.83	537.46	63.74	11.15	**C0940-148-5750-S**	4.114	104.49	90.68	403.36	55.42	9.70
C0940-148-6000-M	0.940	23.88	0.148	3.76	6.000	152.40	4.017	102.04	3.851	97.81	120.83	537.46	60.94	10.66	**C0940-148-6000-S**	4.289	108.94	90.68	403.36	52.99	9.27
C0940-148-6250-M	0.940	23.88	0.148	3.76	6.250	158.75	4.180	106.18	4.006	101.75	120.83	537.46	58.38	10.22	**C0940-148-6250-S**	4.464	113.38	90.68	403.36	50.77	8.88
C0940-148-6500-M	0.940	23.88	0.148	3.76	6.500	165.10	4.344	110.33	4.161	105.69	120.83	537.46	56.03	9.81	**C0940-148-6500-S**	4.639	117.83	90.68	403.36	48.72	8.53
C0940-148-6750-M	0.940	23.88	0.148	3.76	6.750	171.45	4.507	114.47	4.316	109.64	120.83	537.46	53.86	9.43	**C0940-148-6750-S**	4.814	122.27	90.68	403.36	46.84	8.20
C0940-148-7000-M	0.940	23.88	0.148	3.76	7.000	177.80	4.670	118.61	4.472	113.58	120.83	537.46	51.85	9.07	**C0940-148-7000-S**	4.989	126.72	90.68	403.36	45.09	7.89
C0940-148-7500-M	0.940	23.88	0.148	3.76	7.500	190.50	4.996	126.90	4.782	121.46	120.83	537.46	48.25	8.44	**C0940-148-7500-S**	5.339	135.61	90.68	403.36	41.96	7.34
C0940-148-8000-M	0.940	23.88	0.148	3.76	8.000	203.20	5.322	135.18	5.092	129.34	120.83	537.46	45.12	7.90	**C0940-148-8000-S**	5.689	144.50	90.68	403.36	39.24	6.87
C0940-148-8500-M	0.940	23.88	0.148	3.76	8.500	215.90	5.648	143.47	5.402	137.22	120.83	537.46	42.37	7.41	**C0940-148-8500-S**	6.039	153.39	90.68	403.36	36.85	6.45
C0940-148-9000-M	0.940	23.88	0.148	3.76	9.000	228.60	5.975	151.76	5.713	145.10	120.83	537.46	39.94	6.99	**C0940-148-9000-S**	6.389	162.28	90.68	403.36	34.73	6.08
C0940-148-9500-M	0.940	23.88	0.148	3.76	9.500	241.30	6.301	160.04	6.023	152.99	120.83	537.46	37.77	6.61	**C0940-148-9500-S**	6.739	171.17	90.68	403.36	32.84	5.75
C0940-162-1375-M	0.940	23.88	0.162	4.12	1.375	34.93	1.064	27.04	1.060	26.93	154.24	686.11	496.73	86.93	**C0940-162-1375-S**	1.110	28.19	114.52	509.42	431.94	75.59
C0940-162-1500-M	0.940	23.88	0.162	4.12	1.500	38.10	1.153	29.27	1.146	29.10	154.24	686.11	443.93	77.69	**C0940-162-1500-S**	1.203	30.56	114.52	509.42	386.03	67.55
C0940-162-1625-M	0.940	23.88	0.162	4.12	1.625	41.28	1.241	31.51	1.231	31.28	154.24	686.11	401.28	70.22	**C0940-162-1625-S**	1.297	32.94	114.52	509.42	348.94	61.06
C0940-162-1750-M	0.940	23.88	0.162	4.12	1.750	44.45	1.329	33.75	1.317	33.45	154.24	686.11	366.10	64.07	**C0940-162-1750-S**	1.390	35.31	114.52	509.42	318.35	55.71
C0940-162-1875-M	0.940	23.88	0.162	4.12	1.875	47.63	1.417	35.99	1.403	35.63	154.24	686.11	336.60	58.90	**C0940-162-1875-S**	1.484	37.69	114.52	509.42	292.69	51.22
C0940-162-2000-M	0.940	23.88	0.162	4.12	2.000	50.80	1.505	38.22	1.488	37.80	154.24	686.11	311.49	54.51	**C0940-162-2000-S**	1.577	40.06	114.52	509.42	270.86	47.40
C0940-162-2125-M	0.940	23.88	0.162	4.12	2.125	53.98	1.593	40.46	1.574	39.98	154.24	686.11	289.87	50.73	**C0940-162-2125-S**	1.671	42.43	114.52	509.42	252.07	44.11
C0940-162-2250-M	0.940	23.88	0.162	4.12	2.250	57.15	1.681	42.70	1.660	42.15	154.24	686.11	271.06	47.44	**C0940-162-2250-S**	1.764	44.81	114.52	509.42	235.71	41.25
C0940-162-2375-M	0.940	23.88	0.162	4.12	2.375	60.33	1.769	44.93	1.745	44.33	154.24	686.11	254.54	44.54	**C0940-162-2375-S**	1.858	47.18	114.52	509.42	221.34	38.73
C0940-162-2500-M	0.940	23.88	0.162	4.12	2.500	63.50	1.857	47.17	1.831	46.50	154.24	686.11	239.92	41.99	**C0940-162-2500-S**	1.951	49.56	114.52	509.42	208.63	36.51
C0940-162-2625-M	0.940	23.88	0.162	4.12	2.625	66.68	1.945	49.41	1.916	48.68	154.24	686.11	226.89	39.70	**C0940-162-2625-S**	2.045	51.93	114.52	509.42	197.29	34.53
C0940-162-2750-M	0.940	23.88	0.162	4.12	2.750	69.85	2.033	51.64	2.002	50.85	154.24	686.11	215.20	37.66	**C0940-162-2750-S**	2.138	54.31	114.52	509.42	187.13	32.75
C0940-162-2875-M	0.940	23.88	0.162	4.12	2.875	73.03	2.121	53.88	2.088	53.03	154.24	686.11	204.65	35.81	**C0940-162-2875-S**	2.231	56.68	114.52	509.42	177.96	31.14
C0940-162-3000-M	0.940	23.88	0.162	4.12	3.000	76.20	2.209	56.12	2.173	55.20	154.24	686.11	195.09	34.14	**C0940-162-3000-S**	2.325	59.05	114.52	509.42	169.64	29.69
C0940-162-3250-M	0.940	23.88	0.162	4.12	3.250	82.55	2.386	60.59	2.345	59.55	154.24	686.11	178.42	31.22	**C0940-162-3250-S**	2.512	63.80	114.52	509.42	155.15	27.15
C0940-162-3500-M	0.940	23.88	0.162	4.12	3.500	88.90	2.562	65.07	2.516	63.90	154.24	686.11	164.38	28.77	**C0940-162-3500-S**	2.699	68.55	114.52	509.42	142.94	25.01
C0940-162-3750-M	0.940	23.88	0.162	4.12	3.750	95.25	2.738	69.54	2.687	68.25	154.24	686.11	152.38	26.67	**C0940-162-3750-S**	2.886	73.30	114.52	509.42	132.51	23.19
C0940-162-4000-M	0.940	23.88	0.162	4.12	4.000	101.60	2.914	74.01	2.858	72.60	154.24	686.11	142.02	24.85	**C0940-162-4000-S**	3.073	78.05	114.52	509.42	123.50	21.61
C0940-162-4250-M	0.940	23.88	0.162	4.12	4.250	107.95	3.090	78.49	3.030	76.95	154.24	686.11	132.98	23.27	**C0940-162-4250-S**	3.260	82.79	114.52	509.42	115.63	20.24
C0940-162-4500-M	0.940	23.88	0.162	4.12	4.500	114.30	3.266	82.96	3.201	81.30	154.24	686.11	125.02	21.88	**C0940-162-4500-S**	3.447	87.54	114.52	509.42	108.71	19.02
C0940-162-4750-M	0.940	23.88	0.162	4.12	4.750	120.65	3.442	87.44	3.372	85.65	154.24	686.11	117.95	20.64	**C0940-162-4750-S**	3.633	92.29	114.52	509.42	102.57	17.95
C0940-162-5000-M	0.940	23.88	0.162	4.12	5.000	127.00	3.618	91.91	3.543	90.00	154.24	686.11	111.65	19.54	**C0940-162-5000-S**	3.820	97.04	114.52	509.42	97.09	16.99
C0940-162-5250-M	0.940	23.88	0.162	4.12	5.250	133.35	3.795	96.38	3.715	94.35	154.24	686.11	105.98	18.55	**C0940-162-5250-S**	4.007	101.79	114.52	509.42	92.16	16.13
C0940-162-5500-M	0.940	23.88	0.162	4.12	5.500	139.70	3.971	100.86	3.886	98.70	154.24	686.11	100.86	17.65	**C0940-162-5500-S**	4.194	106.53	114.52	509.42	87.71	15.35
C0940-162-5750-M	0.940	23.88	0.162	4.12	5.750	146.05	4.147	105.33	4.057	103.05	154.24	686.11	96.22	16.84	**C0940-162-5750-S**	4.381	111.28	114.52	509.42	83.67	14.64
C0940-162-6000-M	0.940	23.88	0.162	4.12	6.000	152.40	4.323	109.80	4.228	107.40	154.24	686.11	91.98	16.10	**C0940-162-6000-S**	4.568	116.03	114.52	509.42	79.98	14.00
C0940-162-6250-M	0.940	23.88	0.162	4.12	6.250	158.75	4.499	114.28	4.400	111.75	154.24	686.11	88.10	15.42	**C0940-162-6250-S**	4.755	120.78	114.52	509.42	76.61	13.41
C0940-162-6500-M	0.940	23.88	0.162	4.12	6.500	165.10	4.675	118.75	4.571	116.10	154.24	686.11	84.53	14.79	**C0940-162-6500-S**	4.942	125.53	114.52	509.42	73.51	12.86
C0940-162-6750-M	0.940	23.88	0.162	4.12	6.750	171.45	4.851	123.23	4.742	120.45	154.24	686.11	81.24	14.22	**C0940-162-6750-S**	5.129	130.27	114.52	509.42	70.65	12.36
C0940-162-7000-M	0.940	23.88	0.162	4.12	7.000	177.80	5.028	127.70	4.913	124.80	154.24	686.11	78.20	13.69	**C0940-162-7000-S**	5.316	135.02	114.52	509.42	68.00	11.90

Part Numbers with an "*" are squared and not ground. **Part Numbers in bold** represent the newly expanded Associated Spring RAYMOND compression spring offering.

MUSIC WIRE														
Catalog #	Outside Diameter (OD)		Wire Diameter (d)		Free Length (L) Approx		Load Length (L_1)		Solid Height (Sh) Approx		Load (P) at L_1		Spring Rate (R)	
	in	mm	in	mm	in	mm	in	mm	in	mm	lb	N	lb/in	N/mm
C0940-162-7500-M	**0.940**	**23.88**	**0.162**	**4.12**	**7.500**	**190.50**	**5.380**	**136.65**	**5.256**	**133.50**	**154.24**	**686.11**	**72.75**	**12.73**
C0940-162-8000-M	**0.940**	**23.88**	**0.162**	**4.12**	**8.000**	**203.20**	**5.732**	**145.60**	**5.598**	**142.20**	**154.24**	**686.11**	**68.01**	**11.90**
C0940-162-8500-M	**0.940**	**23.88**	**0.162**	**4.12**	**8.500**	**215.90**	**6.084**	**154.54**	**5.941**	**150.90**	**154.24**	**686.11**	**63.85**	**11.17**
C0940-162-9000-M	**0.940**	**23.88**	**0.162**	**4.12**	**9.000**	**228.60**	**6.437**	**163.49**	**6.284**	**159.60**	**154.24**	**686.11**	**60.17**	**10.53**
C0940-162-9500-M	**0.940**	**23.88**	**0.162**	**4.12**	**9.500**	**241.30**	**6.789**	**172.44**	**6.626**	**168.30**	**154.24**	**686.11**	**56.89**	**9.96**
C0940-177-1375-M	**0.940**	**23.88**	**0.177**	**4.50**	**1.375**	**34.93**	**1.169**	**29.69**	**1.132**	**28.76**	**159.97**	**711.58**	**775.96**	**135.79**
C0940-177-1500-M	**0.940**	**23.88**	**0.177**	**4.50**	**1.500**	**38.10**	**1.267**	**32.18**	**1.226**	**31.13**	**161.24**	**717.25**	**691.32**	**120.98**
C0940-177-1625-M	**0.940**	**23.88**	**0.177**	**4.50**	**1.625**	**41.28**	**1.365**	**34.66**	**1.319**	**33.50**	**162.27**	**721.80**	**623.33**	**109.08**
C0940-177-1750-M	**0.940**	**23.88**	**0.177**	**4.50**	**1.750**	**44.45**	**1.463**	**37.15**	**1.412**	**35.86**	**163.11**	**725.53**	**567.52**	**99.32**
C0940-177-1875-M	**0.940**	**23.88**	**0.177**	**4.50**	**1.875**	**47.63**	**1.561**	**39.64**	**1.505**	**38.23**	**163.81**	**728.65**	**520.88**	**91.15**
C0940-177-2000-M	**0.940**	**23.88**	**0.177**	**4.50**	**2.000**	**50.80**	**1.658**	**42.12**	**1.598**	**40.59**	**164.40**	**731.30**	**481.32**	**84.23**
C0940-177-2125-M	**0.940**	**23.88**	**0.177**	**4.50**	**2.125**	**53.98**	**1.756**	**44.61**	**1.691**	**42.96**	**164.91**	**733.57**	**447.35**	**78.29**
C0940-177-2250-M	**0.940**	**23.88**	**0.177**	**4.50**	**2.250**	**57.15**	**1.854**	**47.10**	**1.784**	**45.32**	**165.36**	**735.55**	**417.86**	**73.12**
C0940-177-2375-M	**0.940**	**23.88**	**0.177**	**4.50**	**2.375**	**60.33**	**1.952**	**49.59**	**1.878**	**47.69**	**165.75**	**737.28**	**392.01**	**68.60**
C0940-177-2500-M	**0.940**	**23.88**	**0.177**	**4.50**	**2.500**	**63.50**	**2.050**	**52.07**	**1.971**	**50.06**	**166.09**	**738.81**	**369.18**	**64.61**
C0940-177-2625-M	**0.940**	**23.88**	**0.177**	**4.50**	**2.625**	**66.68**	**2.064**	**52.44**	**2.064**	**52.42**	**195.54**	**869.80**	**348.86**	**61.05**
C0940-177-2750-M	**0.940**	**23.88**	**0.177**	**4.50**	**2.750**	**69.85**	**2.159**	**54.83**	**2.157**	**54.79**	**195.54**	**869.80**	**330.66**	**57.87**
C0940-177-2875-M	**0.940**	**23.88**	**0.177**	**4.50**	**2.875**	**73.03**	**2.253**	**57.22**	**2.250**	**57.15**	**195.54**	**869.80**	**314.26**	**55.00**
C0940-177-3000-M	**0.940**	**23.88**	**0.177**	**4.50**	**3.000**	**76.20**	**2.347**	**59.61**	**2.343**	**59.52**	**195.54**	**869.80**	**299.42**	**52.40**
C0940-177-3250-M	**0.940**	**23.88**	**0.177**	**4.50**	**3.250**	**82.55**	**2.535**	**64.39**	**2.530**	**64.25**	**195.54**	**869.80**	**273.57**	**47.87**
C0940-177-3500-M	**0.940**	**23.88**	**0.177**	**4.50**	**3.500**	**88.90**	**2.724**	**69.18**	**2.716**	**68.98**	**195.54**	**869.80**	**251.83**	**44.07**
C0940-177-3750-M	**0.940**	**23.88**	**0.177**	**4.50**	**3.750**	**95.25**	**2.912**	**73.96**	**2.902**	**73.71**	**195.54**	**869.80**	**233.29**	**40.83**
C0940-177-4000-M	**0.940**	**23.88**	**0.177**	**4.50**	**4.000**	**101.60**	**3.100**	**78.74**	**3.088**	**78.45**	**195.54**	**869.80**	**217.30**	**38.03**
C0940-177-4250-M	**0.940**	**23.88**	**0.177**	**4.50**	**4.250**	**107.95**	**3.288**	**83.53**	**3.275**	**83.18**	**195.54**	**869.80**	**203.35**	**35.59**
C0940-177-4500-M	**0.940**	**23.88**	**0.177**	**4.50**	**4.500**	**114.30**	**3.477**	**88.31**	**3.461**	**87.91**	**195.54**	**869.80**	**191.09**	**33.44**
C0940-177-4750-M	**0.940**	**23.88**	**0.177**	**4.50**	**4.750**	**120.65**	**3.665**	**93.09**	**3.647**	**92.64**	**195.54**	**869.80**	**180.22**	**31.54**
C0940-177-5000-M	**0.940**	**23.88**	**0.177**	**4.50**	**5.000**	**127.00**	**3.853**	**97.87**	**3.834**	**97.37**	**195.54**	**869.80**	**170.53**	**29.84**
C0940-177-5250-M	**0.940**	**23.88**	**0.177**	**4.50**	**5.250**	**133.35**	**4.042**	**102.66**	**4.020**	**102.10**	**195.54**	**869.80**	**161.82**	**28.32**
C0940-177-5500-M	**0.940**	**23.88**	**0.177**	**4.50**	**5.500**	**139.70**	**4.230**	**107.44**	**4.206**	**106.83**	**195.54**	**869.80**	**153.96**	**26.94**
C0940-177-5750-M	**0.940**	**23.88**	**0.177**	**4.50**	**5.750**	**146.05**	**4.418**	**112.22**	**4.392**	**111.57**	**195.54**	**869.80**	**146.82**	**25.69**
C0940-177-6000-M	**0.940**	**23.88**	**0.177**	**4.50**	**6.000**	**152.40**	**4.607**	**117.01**	**4.579**	**116.30**	**195.54**	**869.80**	**140.32**	**24.56**
C0940-177-6250-M	**0.940**	**23.88**	**0.177**	**4.50**	**6.250**	**158.75**	**4.795**	**121.79**	**4.765**	**121.03**	**195.54**	**869.80**	**134.37**	**23.52**
C0940-177-6500-M	**0.940**	**23.88**	**0.177**	**4.50**	**6.500**	**165.10**	**4.983**	**126.57**	**4.951**	**125.76**	**195.54**	**869.80**	**128.91**	**22.56**
C0940-177-6750-M	**0.940**	**23.88**	**0.177**	**4.50**	**6.750**	**171.45**	**5.171**	**131.35**	**5.137**	**130.49**	**195.54**	**869.80**	**123.87**	**21.68**
C0940-177-7000-M	**0.940**	**23.88**	**0.177**	**4.50**	**7.000**	**177.80**	**5.360**	**136.14**	**5.324**	**135.22**	**195.54**	**869.80**	**119.21**	**20.86**
C0940-177-7500-M	**0.940**	**23.88**	**0.177**	**4.50**	**7.500**	**190.50**	**5.736**	**145.70**	**5.696**	**144.69**	**195.54**	**869.80**	**110.87**	**19.40**
C0940-177-8000-M	**0.940**	**23.88**	**0.177**	**4.50**	**8.000**	**203.20**	**6.113**	**155.27**	**6.069**	**154.15**	**195.54**	**869.80**	**103.62**	**18.13**
C0940-177-8500-M	**0.940**	**23.88**	**0.177**	**4.50**	**8.500**	**215.90**	**6.489**	**164.83**	**6.441**	**163.61**	**195.54**	**869.80**	**97.26**	**17.02**
C0940-177-9000-M	**0.940**	**23.88**	**0.177**	**4.50**	**9.000**	**228.60**	**6.866**	**174.40**	**6.814**	**173.07**	**195.54**	**869.80**	**91.63**	**16.04**
C0940-177-9500-M	**0.940**	**23.88**	**0.177**	**4.50**	**9.500**	**241.30**	**7.243**	**183.96**	**7.187**	**182.54**	**195.54**	**869.80**	**86.62**	**15.16**
D12920	0.945	24.00	0.087	2.20	1.543	39.20	0.551	14.00	0.476	12.10	37.26	165.73	37.54	6.57
D12930	0.945	24.00	0.087	2.20	2.327	59.10	0.768	19.50	0.650	16.50	37.26	165.73	23.94	4.19
D13530	0.945	24.00	0.157	4.00	1.319	33.50	0.874	22.20	0.866	22.00	240.30	1068.92	531.83	93.07
D13540	0.945	24.00	0.157	4.00	1.929	49.00	1.220	31.00	1.181	30.00	240.30	1068.92	338.46	59.23
D13550	0.945	24.00	0.157	4.00	2.835	72.00	1.740	44.20	1.654	42.00	240.30	1068.92	219.09	38.34
D13560	0.945	24.00	0.157	4.00	4.134	105.00	2.429	61.70	2.283	58.00	240.30	1068.92	149.09	26.09
D13570	0.945	24.00	0.157	4.00	5.906	150.00	3.453	87.70	3.228	82.00	240.30	1068.92	100.29	17.55
C0970-063-0750-M	**0.970**	**24.64**	**0.063**	**1.60**	**0.750**	**19.05**	**0.299**	**7.59**	**0.190**	**4.82**	**11.56**	**51.43**	**25.63**	**4.49**
C0970-063-1000-M	**0.970**	**24.64**	**0.063**	**1.60**	**1.000**	**25.40**	**0.368**	**9.35**	**0.225**	**5.71**	**11.56**	**51.43**	**18.30**	**3.20**
C0970-063-1250-M	**0.970**	**24.64**	**0.063**	**1.60**	**1.250**	**31.75**	**0.437**	**11.11**	**0.260**	**6.60**	**11.56**	**51.43**	**14.23**	**2.49**
C0970-063-1500-M	**0.970**	**24.64**	**0.063**	**1.60**	**1.500**	**38.10**	**0.507**	**12.87**	**0.295**	**7.48**	**11.56**	**51.43**	**11.64**	**2.04**
C0970-063-1750-M	**0.970**	**24.64**	**0.063**	**1.60**	**1.750**	**44.45**	**0.576**	**14.63**	**0.329**	**8.37**	**11.56**	**51.43**	**9.85**	**1.72**
C0970-063-2000-M	**0.970**	**24.64**	**0.063**	**1.60**	**2.000**	**50.80**	**0.645**	**16.37**	**0.364**	**9.26**	**11.56**	**51.43**	**8.53**	**1.49**
C0970-063-2250-M	**0.970**	**24.64**	**0.063**	**1.60**	**2.250**	**57.15**	**0.715**	**18.15**	**0.399**	**10.13**	**11.56**	**51.43**	**7.53**	**1.32**
C0970-063-2500-M	**0.970**	**24.64**	**0.063**	**1.60**	**2.500**	**63.50**	**0.785**	**19.93**	**0.430**	**10.93**	**11.56**	**51.43**	**6.74**	**1.18**
C0970-063-2750-M	**0.970**	**24.64**	**0.063**	**1.60**	**2.750**	**69.85**	**0.851**	**21.63**	**0.462**	**11.73**	**11.56**	**51.43**	**6.09**	**1.07**
C0970-063-3000-M	**0.970**	**24.64**	**0.063**	**1.60**	**3.000**	**76.20**	**0.920**	**23.38**	**0.493**	**12.53**	**11.56**	**51.43**	**5.56**	**0.97**
C0970-063-3500-M	**0.970**	**24.64**	**0.063**	**1.60**	**3.500**	**88.90**	**1.061**	**26.94**	**0.556**	**14.12**	**11.56**	**51.43**	**4.74**	**0.83**
C0970-063-4000-M	**0.970**	**24.64**	**0.063**	**1.60**	**4.000**	**101.60**	**1.200**	**30.49**	**0.618**	**15.71**	**11.56**	**51.43**	**4.13**	**0.72**
C0970-072-0750-M	**0.970**	**24.64**	**0.072**	**1.83**	**0.750**	**19.05**	**0.325**	**8.25**	**0.231**	**5.87**	**16.79**	**74.70**	**39.50**	**6.91**
C0970-072-1000-M	**0.970**	**24.64**	**0.072**	**1.83**	**1.000**	**25.40**	**0.399**	**10.14**	**0.278**	**7.06**	**16.79**	**74.70**	**27.96**	**4.89**
C0970-072-1250-M	**0.970**	**24.64**	**0.072**	**1.83**	**1.250**	**31.75**	**0.474**	**12.04**	**0.325**	**8.25**	**16.79**	**74.70**	**21.64**	**3.79**
C0970-072-1500-M	**0.970**	**24.64**	**0.072**	**1.83**	**1.500**	**38.10**	**0.549**	**13.93**	**0.371**	**9.44**	**16.79**	**74.70**	**17.65**	**3.09**
C0970-072-1750-M	**0.970**	**24.64**	**0.072**	**1.83**	**1.750**	**44.45**	**0.623**	**15.82**	**0.418**	**10.63**	**16.79**	**74.70**	**14.90**	**2.61**

STAINLESS STEEL						
Catalog #	Load Length (L_1)		Load (P) at L_1		Spring Rate (R)	
	in	mm	lb	N	lb/in	N/mm
C0940-162-7500-S	**5.690**	**144.52**	**114.52**	**509.42**	**63.26**	**11.07**
C0940-162-8000-S	**6.064**	**154.02**	**114.52**	**509.42**	**59.14**	**10.35**
C0940-162-8500-S	**6.437**	**163.51**	**114.52**	**509.42**	**55.52**	**9.72**
C0940-162-9000-S	**6.811**	**173.01**	**114.52**	**509.42**	**52.33**	**9.16**
C0940-162-9500-S	**7.185**	**182.50**	**114.52**	**509.42**	**49.47**	**8.66**
C0940-177-1375-S	**1.162**	**29.52**	**143.52**	**638.39**	**674.75**	**118.08**
C0940-177-1500-S	**1.261**	**32.04**	**143.52**	**638.39**	**601.15**	**105.20**
C0940-177-1625-S	**1.360**	**34.55**	**143.52**	**638.39**	**542.03**	**94.86**
C0940-177-1750-S	**1.459**	**37.06**	**143.52**	**638.39**	**493.50**	**86.36**
C0940-177-1875-S	**1.558**	**39.58**	**143.52**	**638.39**	**452.94**	**79.26**
C0940-177-2000-S	**1.657**	**42.09**	**143.52**	**638.39**	**418.54**	**73.24**
C0940-177-2125-S	**1.756**	**44.60**	**143.52**	**638.39**	**389.00**	**68.08**
C0940-177-2250-S	**1.855**	**47.12**	**143.52**	**638.39**	**363.35**	**63.59**
C0940-177-2375-S	**1.954**	**49.63**	**143.52**	**638.39**	**340.88**	**59.65**
C0940-177-2500-S	**2.053**	**52.14**	**143.52**	**638.39**	**321.03**	**56.18**
C0940-177-2625-S	**2.152**	**54.66**	**143.52**	**638.39**	**303.36**	**53.09**
C0940-177-2750-S	**2.251**	**57.17**	**143.52**	**638.39**	**287.53**	**50.32**
C0940-177-2875-S	**2.350**	**59.69**	**143.52**	**638.39**	**273.27**	**47.82**
C0940-177-3000-S	**2.449**	**62.20**	**143.52**	**638.39**	**260.36**	**45.56**
C0940-177-3250-S	**2.647**	**67.23**	**143.52**	**638.39**	**237.89**	**41.63**
C0940-177-3500-S	**2.845**	**72.25**	**143.52**	**638.39**	**218.98**	**38.32**
C0940-177-3750-S	**3.043**	**77.28**	**143.52**	**638.39**	**202.86**	**35.50**
C0940-177-4000-S	**3.240**	**82.31**	**143.52**	**638.39**	**188.95**	**33.07**
C0940-177-4250-S	**3.438**	**87.34**	**143.52**	**638.39**	**176.83**	**30.94**
C0940-177-4500-S	**3.636**	**92.36**	**143.52**	**638.39**	**166.17**	**29.08**
C0940-177-4750-S	**3.834**	**97.39**	**143.52**	**638.39**	**156.72**	**27.43**
C0940-177-5000-S	**4.032**	**102.42**	**143.52**	**638.39**	**148.28**	**25.95**
C0940-177-5250-S	**4.230**	**107.44**	**143.52**	**638.39**	**140.71**	**24.62**
C0940-177-5500-S	**4.428**	**112.47**	**143.52**	**638.39**	**133.88**	**23.43**
C0940-177-5750-S	**4.626**	**117.50**	**143.52**	**638.39**	**127.67**	**22.34**
C0940-177-6000-S	**4.824**	**122.53**	**143.52**	**638.39**	**122.02**	**21.35**
C0940-177-6250-S	**5.022**	**127.55**	**143.52**	**638.39**	**116.85**	**20.45**
C0940-177-6500-S	**5.220**	**132.58**	**143.52**	**638.39**	**112.09**	**19.62**
C0940-177-6750-S	**5.418**	**137.61**	**143.52**	**638.39**	**107.71**	**18.85**
C0940-177-7000-S	**5.616**	**142.63**	**143.52**	**638.39**	**103.66**	**18.14**
C0940-177-7500-S	**6.011**	**152.69**	**143.52**	**638.39**	**96.41**	**16.87**
C0940-177-8000-S	**6.407**	**162.74**	**143.52**	**638.39**	**90.10**	**15.77**
C0940-177-8500-S	**6.803**	**172.80**	**143.52**	**638.39**	**84.57**	**14.80**
C0940-177-9000-S	**7.199**	**182.85**	**143.52**	**638.39**	**79.68**	**13.94**
C0940-177-9500-S	**7.595**	**192.91**	**143.52**	**638.39**	**75.33**	**13.18**
D22920	0.551	14.00	31.03	138.05	31.26	5.47
D22930	0.768	19.50	31.03	138.05	19.94	3.49
D23530	0.874	22.20	200.25	890.77	443.03	77.53
D23540	1.220	31.00	200.25	890.77	281.94	49.34
D23550	1.740	44.20	200.25	890.77	182.51	31.94
D23560	2.429	61.70	200.25	890.77	124.17	21.73
D23570	3.453	87.70	200.25	890.77	83.54	14.62
C0970-063-0750-S	**0.339**	**8.61**	**8.77**	**39.02**	**21.35**	**3.74**
C0970-063-1000-S	**0.425**	**10.78**	**8.77**	**39.02**	**15.24**	**2.67**
C0970-063-1250-S	**0.510**	**12.95**	**8.77**	**39.02**	**11.85**	**2.07**
C0970-063-1500-S	**0.595**	**15.12**	**8.77**	**39.02**	**9.70**	**1.70**
C0970-063-1750-S	**0.681**	**17.30**	**8.77**	**39.02**	**8.21**	**1.44**
C0970-063-2000-S	**0.765**	**19.44**	**8.77**	**39.02**	**7.11**	**1.24**
C0970-063-2250-S	**0.852**	**21.63**	**8.77**	**39.02**	**6.27**	**1.10**
C0970-063-2500-S	**0.938**	**23.82**	**8.77**	**39.02**	**5.61**	**0.98**
C0970-063-2750-S	**1.021**	**25.93**	**8.77**	**39.02**	**5.07**	**0.89**
C0970-063-3000-S	**1.106**	**28.09**	**8.77**	**39.02**	**4.63**	**0.81**
C0970-063-3500-S	**1.278**	**32.47**	**8.77**	**39.02**	**3.95**	**0.69**
C0970-063-4000-S	**1.450**	**36.84**	**8.77**	**39.02**	**3.44**	**0.60**
C0970-072-0750-S	**0.364**	**9.25**	**12.69**	**56.46**	**32.90**	**5.76**
C0970-072-1000-S	**0.455**	**11.56**	**12.69**	**56.46**	**23.29**	**4.08**
C0970-072-1250-S	**0.546**	**13.87**	**12.69**	**56.46**	**18.03**	**3.15**
C0970-072-1500-S	**0.637**	**16.17**	**12.69**	**56.46**	**14.70**	**2.57**
C0970-072-1750-S	**0.727**	**18.48**	**12.69**	**56.46**	**12.41**	**2.17**

FOR INFORMATION ON ALTERNATIVE FINISHES, SEE PAGE 311

Part Numbers with an "*" are squared and not ground. **Part Numbers in bold** represent the newly expanded Associated Spring RAYMOND compression spring offering.

(OD) 0.970 - 0.970

MUSIC WIRE															STAINLESS STEEL					
Catalog #	Outside Diameter (OD)		Wire Diameter (d)		Free Length (L) Approx		Load Length (L_1)		Solid Height (Sh) Approx		Load (P) at L_1		Spring Rate (R)		Catalog #	Load Length (L_1)		Load (P) at L_1		Spring Rate (R)	
	in	mm	in	mm	in	mm	in	mm	in	mm	lb	N	lb/in	N/mm		in	mm	lb	N	lb/in	N/mm
C0970-072-2000-M	0.970	24.64	0.072	1.83	2.000	50.80	0.698	17.73	0.464	11.78	16.79	74.70	12.90	2.26	C0970-072-2000-S	0.819	20.80	12.69	56.46	10.75	1.88
C0970-072-2250-M	0.970	24.64	0.072	1.83	2.250	57.15	0.773	19.63	0.506	12.85	16.79	74.70	11.37	1.99	C0970-072-2250-S	0.910	23.11	12.69	56.46	9.47	1.66
C0970-072-2500-M	0.970	24.64	0.072	1.83	2.500	63.50	0.847	21.52	0.548	13.92	16.79	74.70	10.16	1.78	C0970-072-2500-S	1.000	25.41	12.69	56.46	8.46	1.48
C0970-072-2750-M	0.970	24.64	0.072	1.83	2.750	69.85	0.917	23.28	0.591	15.02	16.79	74.70	9.16	1.60	C0970-072-2750-S	1.087	27.60	12.69	56.46	7.63	1.34
C0970-072-3000-M	0.970	24.64	0.072	1.83	3.000	76.20	0.996	25.30	0.632	16.06	16.79	74.70	8.38	1.47	C0970-072-3000-S	1.182	30.02	12.69	56.46	6.98	1.22
C0970-072-3500-M	0.970	24.64	0.072	1.83	3.500	88.90	1.145	29.07	0.717	18.21	16.79	74.70	7.13	1.25	C0970-072-3500-S	1.363	34.62	12.69	56.46	5.94	1.04
C0970-072-4000-M	0.970	24.64	0.072	1.83	4.000	101.60	1.296	32.91	0.801	20.34	16.79	74.70	6.21	1.09	C0970-072-4000-S	1.546	39.28	12.69	56.46	5.17	0.91
C0970-080-0750-M	0.970	24.64	0.080	2.03	0.750	19.05	0.378	9.59	0.260	6.59	22.53	100.21	60.50	10.59	C0970-080-0750-S	0.414	10.50	16.96	75.43	50.40	8.82
C0970-080-1000-M	0.970	24.64	0.080	2.03	1.000	25.40	0.483	12.28	0.309	7.86	22.53	100.21	43.60	7.63	C0970-080-1000-S	0.533	13.54	16.96	75.43	36.32	6.36
C0970-080-1250-M	0.970	24.64	0.080	2.03	1.250	31.75	0.585	14.87	0.361	9.16	22.53	100.21	33.90	5.93	C0970-080-1250-S	0.650	16.50	16.96	75.43	28.24	4.94
C0970-080-1500-M	0.970	24.64	0.080	2.03	1.500	38.10	0.684	17.37	0.413	10.49	22.53	100.21	27.60	4.83	C0970-080-1500-S	0.762	19.37	16.96	75.43	22.99	4.02
C0970-080-1750-M	0.970	24.64	0.080	2.03	1.750	44.45	0.779	19.78	0.467	11.85	22.53	100.21	23.20	4.06	C0970-080-1750-S	0.873	22.16	16.96	75.43	19.33	3.38
C0970-080-2000-M	0.970	24.64	0.080	2.03	2.000	50.80	0.879	22.33	0.517	13.13	22.53	100.21	20.10	3.52	C0970-080-2000-S	0.987	25.08	16.96	75.43	16.74	2.93
C0970-080-2250-M	0.970	24.64	0.080	2.03	2.250	57.15	0.977	24.82	0.564	14.34	22.53	100.21	17.70	3.10	C0970-080-2250-S	1.100	27.94	16.96	75.43	14.74	2.58
C0970-080-2500-M	0.970	24.64	0.080	2.03	2.500	63.50	1.074	27.28	0.612	15.55	22.53	100.21	15.80	2.77	C0970-080-2500-S	1.212	30.78	16.96	75.43	13.16	2.30
C0970-080-2750-M	0.970	24.64	0.080	2.03	2.750	69.85	1.175	29.83	0.659	16.73	22.53	100.21	14.30	2.50	C0970-080-2750-S	1.326	33.69	16.96	75.43	11.91	2.08
C0970-080-3000-M	0.970	24.64	0.080	2.03	3.000	76.20	1.267	32.18	0.708	17.97	22.53	100.21	13.00	2.28	C0970-080-3000-S	1.434	36.43	16.96	75.43	10.83	1.90
C0970-080-3500-M	0.970	24.64	0.080	2.03	3.500	88.90	1.470	37.35	0.800	20.32	22.53	100.21	11.10	1.94	C0970-080-3500-S	1.666	42.32	16.96	75.43	9.25	1.62
C0970-080-4000-M	0.970	24.64	0.080	2.03	4.000	101.60	1.677	42.61	0.891	22.64	22.53	100.21	9.70	1.70	C0970-080-4000-S	1.901	48.30	16.96	75.43	8.08	1.41
C0970-085-0750-M	0.970	24.64	0.085	2.16	0.750	19.05	0.355	9.01	0.298	7.57	26.67	118.63	67.50	11.81	C0970-085-0750-S	0.394	10.01	20.02	89.03	56.23	9.84
C0970-085-1000-M	0.970	24.64	0.085	2.16	1.000	25.40	0.536	13.60	0.326	8.27	26.67	118.63	57.43	10.05	C0970-085-1000-S	0.582	14.77	20.02	89.03	47.84	8.37
C0970-085-1250-M	0.970	24.64	0.085	2.16	1.250	31.75	0.646	16.40	0.382	9.70	26.67	118.63	44.14	7.72	C0970-085-1250-S	0.706	17.92	20.02	89.03	36.77	6.43
C0970-085-1500-M	0.970	24.64	0.085	2.16	1.500	38.10	0.756	19.20	0.438	11.13	26.67	118.63	35.84	6.27	C0970-085-1500-S	0.830	21.07	20.02	89.03	29.86	5.22
C0970-085-1750-M	0.970	24.64	0.085	2.16	1.750	44.45	0.866	22.00	0.495	12.56	26.67	118.63	30.17	5.28	C0970-085-1750-S	0.954	24.22	20.02	89.03	25.13	4.40
C0970-085-2000-M	0.970	24.64	0.085	2.16	2.000	50.80	0.976	24.80	0.549	13.95	26.67	118.63	26.05	4.56	C0970-085-2000-S	1.078	27.37	20.02	89.03	21.70	3.80
C0970-085-2250-M	0.970	24.64	0.085	2.16	2.250	57.15	1.086	27.59	0.600	15.24	26.67	118.63	22.92	4.01	C0970-085-2250-S	1.202	30.52	20.02	89.03	19.09	3.34
C0970-085-2500-M	0.970	24.64	0.085	2.16	2.500	63.50	1.196	30.39	0.651	16.53	26.67	118.63	20.46	3.58	C0970-085-2500-S	1.326	33.67	20.02	89.03	17.04	2.98
C0970-085-2750-M	0.970	24.64	0.085	2.16	2.750	69.85	1.307	33.19	0.701	17.81	26.67	118.63	18.48	3.23	C0970-085-2750-S	1.450	36.82	20.02	89.03	15.39	2.69
C0970-085-3000-M	0.970	24.64	0.085	2.16	3.000	76.20	1.416	35.97	0.752	19.11	26.67	118.63	16.84	2.95	C0970-085-3000-S	1.573	39.96	20.02	89.03	14.03	2.45
C0970-085-3500-M	0.970	24.64	0.085	2.16	3.500	88.90	1.638	41.59	0.853	21.67	26.67	118.63	14.32	2.51	C0970-085-3500-S	1.822	46.28	20.02	89.03	11.93	2.09
C0970-085-4000-M	0.970	24.64	0.085	2.16	4.000	101.60	1.858	47.19	0.955	24.25	26.67	118.63	12.45	2.18	C0970-085-4000-S	2.070	52.58	20.02	89.03	10.37	1.81
C0970-092-0875-M	0.970	24.64	0.092	2.34	0.875	22.23	0.437	11.09	0.377	9.58	31.57	140.44	72.00	12.60	C0970-092-0875-S	0.461	11.71	24.83	110.45	59.98	10.50
C0970-092-1000-M	0.970	24.64	0.092	2.34	1.000	25.40	0.488	12.40	0.418	10.62	31.21	138.83	61.00	10.68	C0970-092-1000-S	0.511	12.99	24.83	110.45	50.81	8.89
C0970-092-1250-M	0.970	24.64	0.092	2.34	1.250	31.75	0.592	15.04	0.500	12.70	30.72	136.64	46.70	8.17	C0970-092-1250-S	0.612	15.54	24.83	110.45	38.90	6.81
C0970-092-1500-M	0.970	24.64	0.092	2.34	1.500	38.10	0.696	17.68	0.582	14.78	30.38	135.16	37.80	6.62	C0970-092-1500-S	0.711	18.07	24.83	110.45	31.49	5.51
C0970-092-2000-M	0.970	24.64	0.092	2.34	2.000	50.80	0.891	22.62	0.730	18.53	30.40	135.21	27.40	4.80	C0970-092-2000-S	0.912	23.17	24.83	110.45	22.82	3.99
C0970-092-2500-M	0.970	24.64	0.092	2.34	2.500	63.50	1.085	27.55	0.877	22.27	30.43	135.34	21.50	3.76	C0970-092-2500-S	1.114	28.28	24.83	110.45	17.91	3.13
C0970-092-3000-M	0.970	24.64	0.092	2.34	3.000	76.20	1.279	32.48	1.024	26.00	30.47	135.53	17.70	3.10	C0970-092-3000-S	1.316	33.42	24.83	110.45	14.74	2.58
C0970-092-3500-M	0.970	24.64	0.092	2.34	3.500	88.90	1.475	37.46	1.173	29.80	30.38	135.14	15.00	2.63	C0970-092-3500-S	1.513	38.42	24.83	110.45	12.50	2.19
C0970-092-4000-M	0.970	24.64	0.092	2.34	4.000	101.60	1.672	42.46	1.324	33.62	30.27	134.64	13.00	2.28	C0970-092-4000-S	1.707	43.36	24.83	110.45	10.83	1.90
C0970-095-0875-M	0.970	24.64	0.095	2.41	0.875	22.23	0.476	12.09	0.368	9.35	36.32	161.57	91.00	15.93	C0970-095-0875-S	0.518	13.15	27.09	120.50	75.80	13.27
C0970-095-1000-M	0.970	24.64	0.095	2.41	1.000	25.40	0.526	13.37	0.408	10.36	36.32	161.57	76.68	13.42	C0970-095-1000-S	0.576	14.63	27.09	120.50	63.87	11.18
C0970-095-1250-M	0.970	24.64	0.095	2.41	1.250	31.75	0.627	15.92	0.488	12.39	36.32	161.57	58.27	10.20	C0970-095-1250-S	0.692	17.57	27.09	120.50	48.54	8.49
C0970-095-1500-M	0.970	24.64	0.095	2.41	1.500	38.10	0.731	18.57	0.565	14.35	36.32	161.57	47.25	8.27	C0970-095-1500-S	0.812	20.62	27.09	120.50	39.36	6.89
C0970-095-1750-M	0.970	24.64	0.095	2.41	1.750	44.45	0.836	21.23	0.638	16.21	36.32	161.57	39.73	6.95	C0970-095-1750-S	0.931	23.66	27.09	120.50	33.10	5.79
C0970-095-2000-M	0.970	24.64	0.095	2.41	2.000	50.80	0.941	23.90	0.708	17.98	36.32	161.57	34.30	6.00	C0970-095-2000-S	1.052	26.72	27.09	120.50	28.57	5.00
C0970-095-2250-M	0.970	24.64	0.095	2.41	2.250	57.15	1.055	26.80	0.773	19.63	36.32	161.57	30.40	5.32	C0970-095-2250-S	1.180	29.98	27.09	120.50	25.32	4.43
C0970-095-2500-M	0.970	24.64	0.095	2.41	2.500	63.50	1.150	29.20	0.848	21.53	36.32	161.57	26.90	4.71	C0970-095-2500-S	1.291	32.79	27.09	120.50	22.41	3.92
C0970-095-2750-M	0.970	24.64	0.095	2.41	2.750	69.85	1.254	31.85	0.918	23.31	36.32	161.57	24.28	4.25	C0970-095-2750-S	1.411	35.83	27.09	120.50	20.23	3.54
C0970-095-3000-M	0.970	24.64	0.095	2.41	3.000	76.20	1.359	34.51	0.987	25.08	36.32	161.57	22.13	3.87	C0970-095-3000-S	1.530	38.87	27.09	120.50	18.43	3.23
C0970-095-3500-M	0.970	24.64	0.095	2.41	3.500	88.90	1.563	39.70	1.129	28.68	36.32	161.57	18.75	3.28	C0970-095-3500-S	1.766	44.85	27.09	120.50	15.62	2.73
C0970-095-4000-M	0.970	24.64	0.095	2.41	4.000	101.60	1.763	44.79	1.273	32.33	36.32	161.57	16.24	2.84	C0970-095-4000-S	1.998	50.74	27.09	120.50	13.53	2.37
C0970-105-0875-M	0.970	24.64	0.105	2.67	0.875	22.23	0.516	13.11	0.419	10.65	47.92	213.14	133.50	23.36	C0970-105-0875-S	0.556	14.12	35.50	157.90	111.21	19.46
C0970-105-1000-M	0.970	24.64	0.105	2.67	1.000	25.40	0.574	14.58	0.465	11.82	47.92	213.14	112.50	19.69	C0970-105-1000-S	0.621	15.78	35.50	157.90	93.71	16.40
C0970-105-1250-M	0.970	24.64	0.105	2.67	1.250	31.75	0.686	17.43	0.561	14.24	47.92	213.14	85.00	14.88	C0970-105-1250-S	0.749	19.02	35.50	157.90	70.81	12.39
C0970-105-1500-M	0.970	24.64	0.105	2.67	1.500	38.10	0.806	20.46	0.651	16.53	47.92	213.14	69.00	12.08	C0970-105-1500-S	0.882	22.41	35.50	157.90	57.48	10.06
C0970-105-1750-M	0.970	24.64	0.105	2.67	1.750	44.45	0.909	23.10	0.743	18.86	47.92	213.14	57.00	9.98	C0970-105-1750-S	1.002	25.46	35.50	157.90	47.48	8.31
C0970-105-2000-M	0.970	24.64	0.105	2.67	2.000	50.80	1.022	25.96	0.828	21.03	47.92	213.14	49.00	8.58	C0970-105-2000-S	1.130	28.71	35.50	157.90	40.82	7.14
C0970-105-2250-M	0.970	24.64	0.105	2.67	2.250	57.15	1.136	28.85	0.913	23.18	47.92	213.14	43.00	7.53	C0970-105-2250-S	1.259	31.98	35.50	157.90	35.82	6.27
C0970-105-2500-M	0.970	24.64	0.105	2.67	2.500	63.50	1.239	31.47	1.004	25.50	47.92	213.14	38.00	6.65	C0970-105-2500-S	1.379	35.02	35.50	157.90	31.65	5.54
C0970-105-2750-M	0.970	24.64	0.105	2.67	2.750	69.85	1.341	34.05	1.096	27.84	47.92	213.14	34.00	5.95	C0970-105-2750-S	1.497	38.01	35.50	157.90	28.32	4.96
C0970-105-3000-M	0.970	24.64	0.105	2.67	3.000	76.20	1.454	36.94	1.181	29.99	47.92	213.14	31.00	5.43	C0970-105-3000-S	1.625	41.28	35.50	157.90	25.82	4.52
C0970-105-3500-M	0.970	24.64	0.105	2.67	3.500	88.90	1.725	43.82	1.323	33.60	47.92	213.14	27.00	4.73	C0970-105-3500-S	1.922	48.81	35.50	157.90	22.49	3.94
C0970-105-4000-M	0.970	24.64	0.105	2.67	4.000	101.60	1.956	49.68	1.490	37.85	47.92	213.14	23.44	4.10	C0970-105-4000-S	2.182	55.42	35.50	157.90	19.53	3.42

Part Numbers with an "*" are squared and not ground. **Part Numbers in bold** represent the newly expanded Associated Spring RAYMOND compression spring offering.

MUSIC WIRE														
Catalog #	Outside Diameter (OD)		Wire Diameter (d)		Free Length (L) Approx		Load Length (L_1)		Solid Height (Sh) Approx		Load (P) at L_1		Spring Rate (R)	
	in	mm	in	mm	in	mm	in	mm	in	mm	lb	N	lb/in	N/mm
C0970-112-0875-M	**0.970**	**24.64**	**0.112**	**2.85**	**0.875**	**22.23**	**0.529**	**13.44**	**0.466**	**11.83**	**57.26**	**254.71**	**165.50**	**28.96**
C0970-112-1000-M	**0.970**	**24.64**	**0.112**	**2.85**	**1.000**	**25.40**	**0.588**	**14.94**	**0.520**	**13.20**	**57.26**	**254.71**	**139.00**	**24.33**
C0970-112-1250-M	**0.970**	**24.64**	**0.112**	**2.85**	**1.250**	**31.75**	**0.705**	**17.90**	**0.629**	**15.97**	**57.26**	**254.71**	**105.00**	**18.38**
C0970-112-1500-M	**0.970**	**24.64**	**0.112**	**2.85**	**1.500**	**38.10**	**0.826**	**20.99**	**0.731**	**18.56**	**57.26**	**254.71**	**85.00**	**14.88**
C0970-112-1750-M	**0.970**	**24.64**	**0.112**	**2.85**	**1.750**	**44.45**	**0.943**	**23.96**	**0.828**	**21.04**	**57.26**	**254.71**	**71.00**	**12.43**
C0970-112-2000-M	**0.970**	**24.64**	**0.112**	**2.85**	**2.000**	**50.80**	**1.061**	**26.96**	**0.926**	**23.51**	**57.26**	**254.71**	**61.00**	**10.68**
C0970-112-2250-M	**0.970**	**24.64**	**0.112**	**2.85**	**2.250**	**57.15**	**1.190**	**30.22**	**1.015**	**25.78**	**57.26**	**254.71**	**54.00**	**9.45**
C0970-112-2500-M	**0.970**	**24.64**	**0.112**	**2.85**	**2.500**	**63.50**	**1.291**	**32.79**	**1.131**	**28.73**	**56.83**	**252.81**	**47.00**	**8.23**
C0970-112-2750-M	**0.970**	**24.64**	**0.112**	**2.85**	**2.750**	**69.85**	**1.418**	**36.03**	**1.215**	**30.85**	**57.26**	**254.71**	**43.00**	**7.53**
C0970-112-3000-M	**0.970**	**24.64**	**0.112**	**2.85**	**3.000**	**76.20**	**1.532**	**38.91**	**1.315**	**33.40**	**57.26**	**254.71**	**39.00**	**6.83**
C0970-112-3500-M	**0.970**	**24.64**	**0.112**	**2.85**	**3.500**	**88.90**	**1.765**	**44.83**	**1.511**	**38.39**	**57.26**	**254.71**	**33.00**	**5.78**
C0970-112-4000-M	**0.970**	**24.64**	**0.112**	**2.85**	**4.000**	**101.60**	**2.001**	**50.82**	**1.706**	**43.32**	**57.26**	**254.71**	**28.64**	**5.01**
C0970-115-1750-M	**0.970**	**24.64**	**0.115**	**2.92**	**1.750**	**44.45**	**0.962**	**24.44**	**0.864**	**21.95**	**61.46**	**273.37**	**78.00**	**13.65**
C0970-115-2000-M	**0.970**	**24.64**	**0.115**	**2.92**	**2.000**	**50.80**	**1.094**	**27.79**	**0.956**	**24.28**	**61.59**	**273.96**	**68.00**	**11.90**
C0970-115-2250-M	**0.970**	**24.64**	**0.115**	**2.92**	**2.250**	**57.15**	**1.206**	**30.64**	**1.065**	**27.04**	**61.59**	**273.96**	**59.00**	**10.33**
C0970-115-2500-M	**0.970**	**24.64**	**0.115**	**2.92**	**2.500**	**63.50**	**1.327**	**33.70**	**1.176**	**29.86**	**61.01**	**271.40**	**52.00**	**9.10**
C0970-115-3000-M	**0.970**	**24.64**	**0.115**	**2.92**	**3.000**	**76.20**	**1.568**	**39.82**	**1.371**	**34.83**	**61.59**	**273.96**	**43.00**	**7.53**
C0970-115-3500-M	**0.970**	**24.64**	**0.115**	**2.92**	**3.500**	**88.90**	**1.813**	**46.04**	**1.591**	**40.40**	**60.74**	**270.19**	**36.00**	**6.30**
C0970-115-4000-M	**0.970**	**24.64**	**0.115**	**2.92**	**4.000**	**101.60**	**2.075**	**52.71**	**1.759**	**44.69**	**61.59**	**273.96**	**32.00**	**5.60**
C0970-120-1500-M	**0.970**	**24.64**	**0.120**	**3.05**	**1.500**	**38.10**	**0.891**	**22.63**	**0.790**	**20.07**	**69.24**	**308.00**	**113.67**	**19.89**
C0970-120-1750-M	**0.970**	**24.64**	**0.120**	**3.05**	**1.750**	**44.45**	**1.021**	**25.94**	**0.896**	**22.75**	**69.24**	**308.00**	**95.00**	**16.63**
C0970-120-2000-M	**0.970**	**24.64**	**0.120**	**3.05**	**2.000**	**50.80**	**1.156**	**29.35**	**0.998**	**25.34**	**69.24**	**308.00**	**82.00**	**14.35**
C0970-120-2250-M	**0.970**	**24.64**	**0.120**	**3.05**	**2.250**	**57.15**	**1.275**	**32.38**	**1.113**	**28.28**	**69.24**	**308.00**	**71.00**	**12.43**
C0970-120-2500-M	**0.970**	**24.64**	**0.120**	**3.05**	**2.500**	**63.50**	**1.418**	**36.02**	**1.208**	**30.67**	**69.24**	**308.00**	**64.00**	**11.20**
C0970-120-3000-M	**0.970**	**24.64**	**0.120**	**3.05**	**3.000**	**76.20**	**1.668**	**42.38**	**1.428**	**36.27**	**69.24**	**308.00**	**52.00**	**9.10**
C0970-120-3500-M	**0.970**	**24.64**	**0.120**	**3.05**	**3.500**	**88.90**	**1.926**	**48.93**	**1.642**	**41.71**	**69.24**	**308.00**	**44.00**	**7.70**
C0970-120-4000-M	**0.970**	**24.64**	**0.120**	**3.05**	**4.000**	**101.60**	**2.178**	**55.32**	**1.861**	**47.28**	**69.24**	**308.00**	**38.00**	**6.65**
C0970-125-0875-M	**0.970**	**24.64**	**0.125**	**3.18**	**0.875**	**22.23**	**0.594**	**15.10**	**0.512**	**12.99**	**77.46**	**344.55**	**276.00**	**48.30**
C0970-125-1000-M	**0.970**	**24.64**	**0.125**	**3.18**	**1.000**	**25.40**	**0.663**	**16.85**	**0.573**	**14.55**	**77.46**	**344.55**	**230.00**	**40.25**
C0970-125-1250-M	**0.970**	**24.64**	**0.125**	**3.18**	**1.250**	**31.75**	**0.801**	**20.34**	**0.696**	**17.68**	**77.46**	**344.55**	**172.50**	**30.19**
C0970-125-1500-M	**0.970**	**24.64**	**0.125**	**3.18**	**1.500**	**38.10**	**0.940**	**23.86**	**0.815**	**20.70**	**77.46**	**344.55**	**138.21**	**24.19**
C0970-125-1750-M	**0.970**	**24.64**	**0.125**	**3.18**	**1.750**	**44.45**	**1.077**	**27.37**	**0.925**	**23.50**	**77.46**	**344.55**	**115.17**	**20.15**
C0970-125-2000-M	**0.970**	**24.64**	**0.125**	**3.18**	**2.000**	**50.80**	**1.215**	**30.87**	**1.036**	**26.31**	**77.46**	**344.55**	**98.72**	**17.28**
C0970-125-2250-M	**0.970**	**24.64**	**0.125**	**3.18**	**2.250**	**57.15**	**1.353**	**34.37**	**1.146**	**29.12**	**77.46**	**344.55**	**86.38**	**15.12**
C0970-125-2500-M	**0.970**	**24.64**	**0.125**	**3.18**	**2.500**	**63.50**	**1.491**	**37.88**	**1.257**	**31.92**	**77.46**	**344.55**	**76.78**	**13.44**
C0970-125-3000-M	**0.970**	**24.64**	**0.125**	**3.18**	**3.000**	**76.20**	**1.767**	**44.88**	**1.478**	**37.54**	**77.46**	**344.55**	**62.82**	**10.99**
C0970-125-3500-M	**0.970**	**24.64**	**0.125**	**3.18**	**3.500**	**88.90**	**2.043**	**51.89**	**1.699**	**43.15**	**77.46**	**344.55**	**53.16**	**9.30**
C0970-125-4000-M	**0.970**	**24.64**	**0.125**	**3.18**	**4.000**	**101.60**	**2.319**	**58.89**	**1.920**	**48.76**	**77.46**	**344.55**	**46.07**	**8.06**
C0970-135-0875-M	**0.970**	**24.64**	**0.135**	**3.43**	**0.875**	**22.23**	**0.614**	**15.59**	**0.573**	**14.57**	**95.64**	**425.41**	**366.00**	**64.05**
C0970-135-1000-M	**0.970**	**24.64**	**0.135**	**3.43**	**1.000**	**25.40**	**0.684**	**17.38**	**0.647**	**16.43**	**95.64**	**425.41**	**303.00**	**53.03**
C0970-135-1500-M	**0.970**	**24.64**	**0.135**	**3.43**	**1.500**	**38.10**	**0.977**	**24.82**	**0.929**	**23.60**	**94.11**	**418.63**	**180.03**	**31.51**
C0970-135-1750-M	**0.970**	**24.64**	**0.135**	**3.43**	**1.750**	**44.45**	**1.121**	**28.47**	**1.060**	**26.94**	**94.11**	**418.63**	**149.62**	**26.18**
C0970-135-2000-M	**0.970**	**24.64**	**0.135**	**3.43**	**2.000**	**50.80**	**1.265**	**32.12**	**1.192**	**30.27**	**94.11**	**418.64**	**128.00**	**22.40**
C0970-135-2250-M	**0.970**	**24.64**	**0.135**	**3.43**	**2.250**	**57.15**	**1.408**	**35.78**	**1.323**	**33.60**	**94.12**	**418.65**	**111.84**	**19.57**
C0970-135-2500-M	**0.970**	**24.64**	**0.135**	**3.43**	**2.500**	**63.50**	**1.552**	**39.43**	**1.454**	**36.94**	**94.11**	**418.64**	**99.30**	**17.38**
C0970-135-3000-M	**0.970**	**24.64**	**0.135**	**3.43**	**3.000**	**76.20**	**1.840**	**46.73**	**1.717**	**43.61**	**94.11**	**418.60**	**81.11**	**14.19**
C0970-135-3500-M	**0.970**	**24.64**	**0.135**	**3.43**	**3.500**	**88.90**	**2.127**	**54.03**	**1.979**	**50.27**	**94.12**	**418.67**	**68.56**	**12.00**
C0970-135-4000-M	**0.970**	**24.64**	**0.135**	**3.43**	**4.000**	**101.60**	**2.415**	**61.33**	**2.242**	**56.94**	**94.12**	**418.68**	**59.37**	**10.39**
C0970-148-1000-M	**0.970**	**24.64**	**0.148**	**3.76**	**1.000**	**25.40**	**0.732**	**18.60**	**0.709**	**18.01**	**122.87**	**546.57**	**459.00**	**80.33**
C0970-148-1500-M	**0.970**	**24.64**	**0.148**	**3.76**	**1.500**	**38.10**	**1.059**	**26.89**	**1.030**	**26.16**	**118.47**	**526.97**	**268.40**	**46.97**
C0970-148-2000-M	**0.970**	**24.64**	**0.148**	**3.76**	**2.000**	**50.80**	**1.376**	**34.94**	**1.329**	**33.75**	**118.40**	**526.68**	**189.60**	**33.18**
C0970-148-2500-M	**0.970**	**24.64**	**0.148**	**3.76**	**2.500**	**63.50**	**1.692**	**42.98**	**1.627**	**41.33**	**118.43**	**526.79**	**146.60**	**25.66**
C0970-148-3000-M	**0.970**	**24.64**	**0.148**	**3.76**	**3.000**	**76.20**	**2.009**	**51.02**	**1.926**	**48.91**	**118.44**	**526.87**	**119.50**	**20.91**
C0970-148-3500-M	**0.970**	**24.64**	**0.148**	**3.76**	**3.500**	**88.90**	**2.325**	**59.05**	**2.223**	**56.47**	**118.58**	**527.46**	**100.90**	**17.66**
C0970-148-4000-M	**0.970**	**24.64**	**0.148**	**3.76**	**4.000**	**101.60**	**2.643**	**67.13**	**2.524**	**64.10**	**118.33**	**526.34**	**87.20**	**15.26**
C0970-162-1500-M	**0.970**	**24.64**	**0.162**	**4.12**	**1.500**	**38.10**	**1.123**	**28.52**	**1.109**	**28.17**	**156.59**	**696.54**	**415.20**	**72.66**
C0970-162-2000-M	**0.970**	**24.64**	**0.162**	**4.12**	**2.000**	**50.80**	**1.463**	**37.15**	**1.436**	**36.48**	**156.54**	**696.33**	**291.30**	**50.98**
C0970-162-2500-M	**0.970**	**24.64**	**0.162**	**4.12**	**2.500**	**63.50**	**1.802**	**45.77**	**1.763**	**44.78**	**156.61**	**696.62**	**224.40**	**39.27**
C0970-162-3000-M	**0.970**	**24.64**	**0.162**	**4.12**	**3.000**	**76.20**	**2.142**	**54.40**	**2.090**	**53.07**	**156.67**	**696.90**	**182.50**	**31.94**
C0970-162-3500-M	**0.970**	**24.64**	**0.162**	**4.12**	**3.500**	**88.90**	**2.482**	**63.04**	**2.417**	**61.40**	**156.48**	**696.07**	**153.70**	**26.90**
C0970-162-4000-M	**0.970**	**24.64**	**0.162**	**4.12**	**4.000**	**101.60**	**2.822**	**71.67**	**2.744**	**69.70**	**156.50**	**696.16**	**132.80**	**23.24**
C0975-074-0750-M	0.975	24.77	0.074	1.88	0.750	19.05	0.445	11.30	0.295	7.49	12.15	54.05	39.80	6.97
C0975-074-0875-M	0.975	24.77	0.074	1.88	0.880	22.35	0.512	13.00	0.317	8.05	12.15	54.05	33.00	5.78
C0975-074-1000-M	0.975	24.77	0.074	1.88	1.000	25.40	0.568	14.43	0.340	8.64	12.15	54.05	28.10	4.92

STAINLESS STEEL						
Catalog #	Load Length (L_1)		Load (P) at L_1		Spring Rate (R)	
	in	mm	lb	N	lb/in	N/mm
C0970-112-0875-S	**0.569**	**14.45**	**42.21**	**187.77**	**137.86**	**24.13**
C0970-112-1000-S	**0.635**	**16.14**	**42.21**	**187.77**	**115.79**	**20.26**
C0970-112-1250-S	**0.767**	**19.49**	**42.21**	**187.77**	**87.47**	**15.31**
C0970-112-1500-S	**0.904**	**22.96**	**42.21**	**187.77**	**70.81**	**12.39**
C0970-112-1750-S	**1.036**	**26.32**	**42.21**	**187.77**	**59.14**	**10.35**
C0970-112-2000-S	**1.169**	**29.70**	**42.21**	**187.77**	**50.81**	**8.89**
C0970-112-2250-S	**1.312**	**33.31**	**42.21**	**187.77**	**44.98**	**7.87**
C0970-112-2500-S	**1.422**	**36.11**	**42.21**	**187.77**	**39.15**	**6.85**
C0970-112-2750-S	**1.572**	**39.92**	**42.21**	**187.77**	**35.82**	**6.27**
C0970-112-3000-S	**1.701**	**43.20**	**42.21**	**187.77**	**32.49**	**5.69**
C0970-112-3500-S	**1.964**	**49.90**	**42.21**	**187.77**	**27.49**	**4.81**
C0970-112-4000-S	**2.231**	**56.66**	**42.21**	**187.77**	**23.86**	**4.17**
C0970-115-1750-S	**1.053**	**26.74**	**45.30**	**201.52**	**64.97**	**11.37**
C0970-115-2000-S	**1.200**	**30.48**	**45.30**	**201.52**	**56.64**	**9.91**
C0970-115-2250-S	**1.328**	**33.74**	**45.30**	**201.52**	**49.15**	**8.60**
C0970-115-2500-S	**1.454**	**36.93**	**45.30**	**201.52**	**43.32**	**7.58**
C0970-115-3000-S	**1.735**	**44.07**	**45.30**	**201.52**	**35.82**	**6.27**
C0970-115-3500-S	**1.989**	**50.53**	**45.30**	**201.52**	**29.99**	**5.25**
C0970-115-4000-S	**2.300**	**58.43**	**45.30**	**201.52**	**26.66**	**4.66**
C0970-120-1500-S	**0.964**	**24.49**	**50.75**	**225.74**	**94.69**	**16.57**
C0970-120-1750-S	**1.109**	**28.16**	**50.75**	**225.74**	**79.14**	**13.85**
C0970-120-2000-S	**1.257**	**31.93**	**50.75**	**225.74**	**68.31**	**11.95**
C0970-120-2250-S	**1.392**	**35.35**	**50.75**	**225.74**	**59.14**	**10.35**
C0970-120-2500-S	**1.548**	**39.32**	**50.75**	**225.74**	**53.31**	**9.33**
C0970-120-3000-S	**1.828**	**46.44**	**50.75**	**225.74**	**43.32**	**7.58**
C0970-120-3500-S	**2.115**	**53.73**	**50.75**	**225.74**	**36.65**	**6.41**
C0970-120-4000-S	**2.397**	**60.88**	**50.75**	**225.74**	**31.65**	**5.54**
C0970-125-0875-S	**0.629**	**15.98**	**56.56**	**251.60**	**229.91**	**40.23**
C0970-125-1000-S	**0.705**	**17.90**	**56.56**	**251.60**	**191.59**	**33.53**
C0970-125-1250-S	**0.856**	**21.75**	**56.56**	**251.60**	**143.69**	**25.15**
C0970-125-1500-S	**1.009**	**25.62**	**56.56**	**251.60**	**115.13**	**20.15**
C0970-125-1750-S	**1.160**	**29.47**	**56.56**	**251.60**	**95.94**	**16.79**
C0970-125-2000-S	**1.312**	**33.33**	**56.56**	**251.60**	**82.23**	**14.39**
C0970-125-2250-S	**1.464**	**37.18**	**56.56**	**251.60**	**71.96**	**12.59**
C0970-125-2500-S	**1.616**	**41.04**	**56.56**	**251.60**	**63.96**	**11.19**
C0970-125-3000-S	**1.919**	**48.75**	**56.56**	**251.60**	**52.33**	**9.16**
C0970-125-3500-S	**2.223**	**56.46**	**56.56**	**251.60**	**44.28**	**7.75**
C0970-125-4000-S	**2.526**	**64.16**	**56.56**	**251.60**	**38.38**	**6.72**
C0970-135-0875-S	**0.648**	**16.45**	**69.32**	**308.33**	**304.88**	**53.35**
C0970-135-1000-S	**0.725**	**18.42**	**69.32**	**308.33**	**252.40**	**44.17**
C0970-135-1500-S	**1.038**	**26.36**	**69.32**	**308.33**	**149.97**	**26.24**
C0970-135-1750-S	**1.194**	**30.32**	**69.32**	**308.33**	**124.63**	**21.81**
C0970-135-2000-S	**1.350**	**34.29**	**69.32**	**308.33**	**106.62**	**18.66**
C0970-135-2250-S	**1.506**	**38.25**	**69.32**	**308.33**	**93.16**	**16.30**
C0970-135-2500-S	**1.662**	**42.22**	**69.32**	**308.33**	**82.72**	**14.48**
C0970-135-3000-S	**1.974**	**50.14**	**69.32**	**308.33**	**67.57**	**11.82**
C0970-135-3500-S	**2.286**	**58.07**	**69.32**	**308.33**	**57.11**	**9.99**
C0970-135-4000-S	**2.598**	**66.00**	**69.32**	**308.33**	**49.46**	**8.65**
C0970-148-1000-S	**0.769**	**19.54**	**88.18**	**392.25**	**382.35**	**66.91**
C0970-148-1500-S	**1.106**	**28.08**	**88.18**	**392.25**	**223.58**	**39.13**
C0970-148-2000-S	**1.442**	**36.62**	**88.18**	**392.25**	**157.94**	**27.64**
C0970-148-2500-S	**1.778**	**45.16**	**88.18**	**392.25**	**122.12**	**21.37**
C0970-148-3000-S	**2.114**	**53.70**	**88.18**	**392.25**	**99.54**	**17.42**
C0970-148-3500-S	**2.451**	**62.25**	**88.18**	**392.25**	**84.05**	**14.71**
C0970-148-4000-S	**2.786**	**70.76**	**88.18**	**392.25**	**72.64**	**12.71**
C0970-162-1500-S	**1.178**	**29.92**	**111.44**	**495.71**	**345.86**	**60.53**
C0970-162-2000-S	**1.541**	**39.13**	**111.44**	**495.71**	**242.65**	**42.46**
C0970-162-2500-S	**1.904**	**48.36**	**111.44**	**495.71**	**186.93**	**32.71**
C0970-162-3000-S	**2.267**	**57.58**	**111.44**	**495.71**	**152.02**	**26.60**
C0970-162-3500-S	**2.630**	**66.79**	**111.44**	**495.71**	**128.03**	**22.41**
C0970-162-4000-S	**2.993**	**76.01**	**111.44**	**495.71**	**110.62**	**19.36**
C0975-074-0750-S	0.445	11.30	10.12	45.02	33.15	5.80
C0975-074-0875-S	0.512	13.00	10.12	45.02	27.49	4.81
C0975-074-1000-S	0.568	14.43	10.12	45.02	23.41	4.10

FOR INFORMATION ON ALTERNATIVE FINISHES, SEE PAGE 311

Part Numbers with an "*" are squared and not ground. **Part Numbers in bold** represent the newly expanded Associated Spring RAYMOND compression spring offering.

MUSIC WIRE																STAINLESS STEEL						
Catalog #	Outside Diameter (OD)		Wire Diameter (d)		Free Length (L) Approx		Load Length (L_1)		Solid Height (Sh) Approx		Load (P) at L_1		Spring Rate (R)		Catalog #	Load Length (L_1)		Load (P) at L_1		Spring Rate (R)	
	in	mm	in	mm	in	mm	in	mm	in	mm	lb	N	lb/in	N/mm		in	mm	lb	N	lb/in	N/mm
C0975-074-1250-M	0.975	24.77	0.074	1.88	1.250	31.75	0.691	17.55	0.386	9.80	12.15	54.05	21.70	3.80	C0975-074-1250-S	0.691	17.55	10.12	45.02	18.08	3.16
C0975-074-1500-M	0.975	24.77	0.074	1.88	1.500	38.10	0.814	20.68	0.431	10.95	12.15	54.05	17.70	3.10	C0975-074-1500-S	0.814	20.68	10.12	45.02	14.74	2.58
C0975-074-2000-M	0.975	24.77	0.074	1.88	2.000	50.80	1.061	26.95	0.522	13.26	12.15	54.05	12.90	2.26	C0975-074-2000-S	1.061	26.95	10.12	45.02	10.75	1.88
C0975-074-2500-M	0.975	24.77	0.074	1.88	2.500	63.50	1.307	33.20	0.613	15.57	12.15	54.05	10.20	1.79	C0975-074-2500-S	1.307	33.20	10.12	45.02	8.50	1.49
C0975-074-3000-M	0.975	24.77	0.074	1.88	3.000	76.20	1.554	39.47	0.704	17.88	12.15	54.05	8.40	1.47	C0975-074-3000-S	1.554	39.47	10.12	45.02	7.00	1.22
C0975-074-3500-M	0.975	24.77	0.074	1.88	3.500	88.90	1.800	45.72	0.795	20.19	12.15	54.05	7.10	1.24	C0975-074-3500-S	1.800	45.72	10.12	45.02	5.91	1.03
C0975-074-4000-M	0.975	24.77	0.074	1.88	4.000	101.60	2.047	51.99	0.886	22.50	12.15	54.05	6.20	1.09	C0975-074-4000-S	2.047	51.99	10.12	45.02	5.17	0.90
C0975-085-0875-M	0.975	24.77	0.085	2.16	0.880	22.35	0.547	13.89	0.381	9.68	17.90	79.62	53.80	9.42	C0975-085-0875-S	0.547	13.89	14.91	66.33	44.82	7.84
C0975-085-1000-M	0.975	24.77	0.085	2.16	1.000	25.40	0.608	15.44	0.411	10.44	17.90	79.62	45.70	8.00	C0975-085-1000-S	0.608	15.44	14.91	66.33	38.07	6.66
C0975-085-1250-M	0.975	24.77	0.085	2.16	1.250	31.75	0.740	18.80	0.470	11.94	17.90	79.62	35.10	6.14	C0975-085-1250-S	0.740	18.80	14.91	66.33	29.24	5.12
C0975-085-1500-M	0.975	24.77	0.085	2.16	1.500	38.10	0.872	22.15	0.530	13.46	17.90	79.62	28.50	4.99	C0975-085-1500-S	0.872	22.15	14.91	66.33	23.74	4.15
C0975-085-2000-M	0.975	24.77	0.085	2.16	2.000	50.80	1.136	28.85	0.649	16.48	17.90	79.62	20.70	3.62	C0975-085-2000-S	1.136	28.85	14.91	66.33	17.24	3.02
C0975-085-2500-M	0.975	24.77	0.085	2.16	2.500	63.50	1.400	35.56	0.769	19.53	17.90	79.62	16.30	2.85	C0975-085-2500-S	1.400	35.56	14.91	66.33	13.58	2.38
C0975-085-3000-M	0.975	24.77	0.085	2.16	3.000	76.20	1.664	42.27	0.888	22.56	17.90	79.62	13.40	2.35	C0975-085-3000-S	1.664	42.27	14.91	66.33	11.16	1.95
C0975-085-3500-M	0.975	24.77	0.085	2.16	3.500	88.90	1.928	48.97	1.007	25.58	17.90	79.62	11.40	2.00	C0975-085-3500-S	1.928	48.97	14.91	66.33	9.50	1.66
C0975-092-0875-M	0.975	24.77	0.092	2.34	0.880	22.35	0.570	14.48	0.421	10.69	22.31	99.24	72.00	12.60	C0975-092-0875-S	0.570	14.48	18.58	82.67	59.98	10.50
C0975-092-1000-M	0.975	24.77	0.092	2.34	1.000	25.40	0.634	16.10	0.456	11.58	22.31	99.24	61.00	10.68	C0975-092-1000-S	0.634	16.10	18.58	82.67	50.81	8.89
C0975-092-1250-M	0.975	24.77	0.092	2.34	1.250	31.75	0.772	19.61	0.525	13.34	22.31	99.24	46.70	8.17	C0975-092-1250-S	0.772	19.61	18.58	82.67	38.90	6.81
C0975-092-1500-M	0.975	24.77	0.092	2.34	1.500	38.10	0.910	23.11	0.594	15.09	22.31	99.24	37.80	6.62	C0975-092-1500-S	0.910	23.11	18.58	82.67	31.49	5.51
C0975-092-2000-M	0.975	24.77	0.092	2.34	2.000	50.80	1.186	30.12	0.732	18.59	22.31	99.24	27.40	4.80	C0975-092-2000-S	1.186	30.12	18.58	82.67	22.82	3.99
C0975-092-2500-M	0.975	24.77	0.092	2.34	2.500	63.50	1.461	37.11	0.871	22.12	22.31	99.24	21.50	3.76	C0975-092-2500-S	1.461	37.11	18.58	82.67	17.91	3.13
C0975-092-3000-M	0.975	24.77	0.092	2.34	3.000	76.20	1.737	44.12	1.009	25.63	22.31	99.24	17.70	3.10	C0975-092-3000-S	1.737	44.12	18.58	82.67	14.74	2.58
C0975-092-3500-M	0.975	24.77	0.092	2.34	3.500	88.90	2.013	51.13	1.147	29.13	22.31	99.24	15.00	2.63	C0975-092-3500-S	2.013	51.13	18.58	82.67	12.50	2.19
C0975-092-4000-M	0.975	24.77	0.092	2.34	4.000	101.60	2.289	58.14	1.286	32.66	22.31	99.24	13.00	2.28	C0975-092-4000-S	2.289	58.14	18.58	82.67	10.83	1.90
C0975-096-0875-M	0.975	24.77	0.096	2.44	0.880	22.35	0.583	14.81	0.444	11.28	25.11	111.69	84.60	14.81	C0975-096-0875-S	0.583	14.81	20.92	93.04	70.47	12.33
C0975-096-1000-M	0.975	24.77	0.096	2.44	1.000	25.40	0.649	16.48	0.481	12.22	25.11	111.69	71.50	12.51	C0975-096-1000-S	0.649	16.48	20.92	93.04	59.56	10.42
C0975-096-1250-M	0.975	24.77	0.096	2.44	1.250	31.75	0.790	20.07	0.556	14.12	25.11	111.69	54.60	9.56	C0975-096-1250-S	0.790	20.07	20.92	93.04	45.48	7.96
C0975-096-1500-M	0.975	24.77	0.096	2.44	1.500	38.10	0.931	23.65	0.631	16.03	25.11	111.69	44.20	7.74	C0975-096-1500-S	0.931	23.65	20.92	93.04	36.82	6.44
C0975-096-2000-M	0.975	24.77	0.096	2.44	2.000	50.80	1.214	30.84	0.780	19.81	25.11	111.69	31.90	5.58	C0975-096-2000-S	1.214	30.84	20.92	93.04	26.57	4.65
C0975-096-2500-M	0.975	24.77	0.096	2.44	2.500	63.50	1.497	38.02	0.930	23.62	25.11	111.69	25.00	4.38	C0975-096-2500-S	1.497	38.02	20.92	93.04	20.83	3.64
C0975-096-3000-M	0.975	24.77	0.096	2.44	3.000	76.20	1.779	45.19	1.079	27.41	25.11	111.69	20.60	3.61	C0975-096-3000-S	1.779	45.19	20.92	93.04	17.16	3.00
C0975-096-3500-M	0.975	24.77	0.096	2.44	3.500	88.90	2.062	52.37	1.228	31.19	25.11	111.69	17.50	3.06	C0975-096-3500-S	2.062	52.37	20.92	93.04	14.58	2.55
C0975-105-0880-M	0.975	24.77	0.105	2.67	0.880	22.35	0.610	15.49	0.496	12.60	32.19	143.19	119.10	20.84	C0975-105-0880-S	0.610	15.49	26.81	119.28	99.21	17.36
C0975-105-1000-M	0.975	24.77	0.105	2.67	1.000	25.40	0.681	17.30	0.538	13.67	32.19	143.19	101.00	17.68	C0975-105-1000-S	0.681	17.30	26.81	119.28	84.13	14.72
C0975-105-1250-M	0.975	24.77	0.105	2.67	1.250	31.75	0.830	21.08	0.626	15.90	32.19	143.19	76.70	13.42	C0975-105-1250-S	0.830	21.08	26.81	119.28	63.89	11.18
C0975-105-1500-M	0.975	24.77	0.105	2.67	1.500	38.10	0.979	24.87	0.713	18.11	32.19	143.19	61.80	10.82	C0975-105-1500-S	0.979	24.87	26.81	119.28	51.48	9.01
C0975-105-1750-M	0.975	24.77	0.105	2.67	1.750	44.45	1.129	28.68	0.800	20.32	32.19	143.19	51.80	9.07	C0975-105-1750-S	1.129	28.68	26.81	119.28	43.15	7.55
C0975-105-2000-M	0.975	24.77	0.105	2.67	2.000	50.80	1.278	32.46	0.888	22.56	32.19	143.19	44.60	7.81	C0975-105-2000-S	1.278	32.46	26.81	119.28	37.15	6.50
C0975-105-2250-M	0.975	24.77	0.105	2.67	2.250	57.15	1.427	36.25	0.975	24.77	32.19	143.19	39.10	6.84	C0975-105-2250-S	1.427	36.25	26.81	119.28	32.57	5.70
C0975-105-2500-M	0.975	24.77	0.105	2.67	2.500	63.50	1.576	40.03	1.062	26.97	32.19	143.19	34.80	6.09	C0975-105-2500-S	1.576	40.03	26.81	119.28	28.99	5.07
C0975-105-2750-M	0.975	24.77	0.105	2.67	2.750	69.85	1.725	43.82	1.149	29.18	32.19	143.19	31.40	5.50	C0975-105-2750-S	1.725	43.82	26.81	119.28	26.16	4.58
C0975-105-3000-M	0.975	24.77	0.105	2.67	3.000	76.20	1.874	47.60	1.237	31.42	32.19	143.19	28.60	5.01	C0975-105-3000-S	1.874	47.60	26.81	119.28	23.82	4.17
C0975-105-3500-M	0.975	24.77	0.105	2.67	3.500	88.90	2.173	55.19	1.411	35.84	32.19	143.19	24.30	4.25	C0975-105-3500-S	2.173	55.19	26.81	119.28	20.24	3.54
C0975-105-4000-M	0.975	24.77	0.105	2.67	4.000	101.60	2.471	62.76	1.586	40.28	32.19	143.19	21.10	3.69	C0975-105-4000-S	2.471	62.76	26.81	119.28	17.58	3.08
C0975-112-0880-M	0.975	24.77	0.112	2.85	0.880	22.35	0.631	16.03	0.535	13.59	38.48	171.17	154.70	27.07	C0975-112-0880-S	0.631	16.03	32.05	142.58	128.87	22.55
C0975-112-1000-M	0.975	24.77	0.112	2.85	1.000	25.40	0.706	17.93	0.581	14.76	38.48	171.17	130.80	22.89	C0975-112-1000-S	0.706	17.93	32.05	142.58	108.96	19.07
C0975-112-1250-M	0.975	24.77	0.112	2.85	1.250	31.75	0.861	21.87	0.679	17.25	38.48	171.17	98.90	17.31	C0975-112-1250-S	0.861	21.87	32.05	142.58	82.38	14.42
C0975-112-1500-M	0.975	24.77	0.112	2.85	1.500	38.10	1.016	25.81	0.776	19.71	38.48	171.17	79.50	13.91	C0975-112-1500-S	1.016	25.81	32.05	142.58	66.22	11.59
C0975-112-2000-M	0.975	24.77	0.112	2.85	2.000	50.80	1.327	33.71	0.970	24.64	38.48	171.17	57.10	9.99	C0975-112-2000-S	1.327	33.71	32.05	142.58	47.56	8.32
C0975-112-2500-M	0.975	24.77	0.112	2.85	2.500	63.50	1.637	41.58	1.164	29.57	38.48	171.17	44.60	7.81	C0975-112-2500-S	1.637	41.58	32.05	142.58	37.15	6.50
C0975-112-3000-M	0.975	24.77	0.112	2.85	3.000	76.20	1.947	49.45	1.358	34.49	38.48	171.17	36.60	6.41	C0975-112-3000-S	1.947	49.45	32.05	142.58	30.49	5.34
C0975-112-3500-M	0.975	24.77	0.112	2.85	3.500	88.90	2.258	57.35	1.553	39.45	38.48	171.17	31.00	5.43	C0975-112-3500-S	2.258	57.35	32.05	142.58	25.82	4.52
C0975-125-0880-M	0.975	24.77	0.125	3.18	0.880	22.35	0.669	16.99	0.602	15.29	52.04	231.49	246.60	43.16	C0975-125-0880-S	0.669	16.99	43.35	192.83	205.42	35.95
C0975-125-1000-M	0.975	24.77	0.125	3.18	1.000	25.40	0.749	19.02	0.657	16.69	52.04	231.49	207.20	36.26	C0975-125-1000-S	0.749	19.02	43.35	192.83	172.60	30.20
C0975-125-1250-M	0.975	24.77	0.125	3.18	1.250	31.75	0.915	23.24	0.772	19.61	52.04	231.49	155.40	27.20	C0975-125-1250-S	0.915	23.24	43.35	192.83	129.45	22.65
C0975-125-1500-M	0.975	24.77	0.125	3.18	1.500	38.10	1.081	27.46	0.887	22.53	52.04	231.49	124.30	21.75	C0975-125-1500-S	1.081	27.46	43.35	192.83	103.54	18.12
C0975-125-1750-M	0.975	24.77	0.125	3.18	1.750	44.45	1.248	31.70	1.002	25.45	52.04	231.49	103.60	18.13	C0975-125-1750-S	1.248	31.70	43.35	192.83	86.30	15.10
C0975-125-2000-M	0.975	24.77	0.125	3.18	2.000	50.80	1.414	35.92	1.117	28.37	52.04	231.49	88.80	15.54	C0975-125-2000-S	1.414	35.92	43.35	192.83	73.97	12.94
C0975-125-2250-M	0.975	24.77	0.125	3.18	2.250	57.15	1.580	40.13	1.232	31.29	52.04	231.49	77.70	13.60	C0975-125-2250-S	1.580	40.13	43.35	192.83	64.72	11.33
C0975-125-2500-M	0.975	24.77	0.125	3.18	2.500	63.50	1.746	44.35	1.347	34.21	52.04	231.49	69.10	12.09	C0975-125-2500-S	1.746	44.35	43.35	192.83	57.56	10.07
C0975-125-2750-M	0.975	24.77	0.125	3.18	2.750	69.85	1.913	48.59	1.462	37.13	52.04	231.49	62.20	10.89	C0975-125-2750-S	1.913	48.59	43.35	192.83	51.81	9.07
C0975-125-3000-M	0.975	24.77	0.125	3.18	3.000	76.20	2.079	52.81	1.577	40.06	52.04	231.49	56.50	9.89	C0975-125-3000-S	2.079	52.81	43.35	192.83	47.07	8.24
C0975-125-3500-M	0.975	24.77	0.125	3.18	3.500	88.90	2.411	61.24	1.807	45.90	52.04	231.49	47.80	8.37	C0975-125-3500-S	2.411	61.24	43.35	192.83	39.82	6.97
C0975-125-4000-M	0.975	24.77	0.125	3.18	4.000	101.60	2.744	69.70	2.037	51.74	52.04	231.49	41.40	7.25	C0975-125-4000-S	2.744	69.70	43.35	192.83	34.49	6.04

Part Numbers with an "*" are squared and not ground. **Part Numbers in bold** represent the newly expanded Associated Spring RAYMOND compression spring offering.

MUSIC WIRE															STAINLESS STEEL					
Catalog #	Outside Diameter (OD)		Wire Diameter (d)		Free Length (L) Approx		Load Length (L_1)		Solid Height (Sh) Approx		Load (P) at L_1		Spring Rate (R)		Catalog #	Load Length (L_1)		Load (P) at L_1		Spring Rate (R)	
	in	mm	in	mm	in	mm	in	mm	in	mm	lb	N	lb/in	N/mm		in	mm	lb	N	lb/in	N/mm
C0975-135-0880-M	0.975	24.77	0.135	3.43	0.880	22.35	0.699	17.75	0.643	16.33	64.46	286.73	356.60	62.41	C0975-135-0880-S	0.699	17.75	53.70	238.85	297.05	51.98
C0975-135-1000-M	0.975	24.77	0.135	3.43	1.000	25.40	0.784	19.91	0.703	17.86	64.46	286.73	298.00	52.15	C0975-135-1000-S	0.784	19.91	53.70	238.85	248.23	43.44
C0975-135-1500-M	0.975	24.77	0.135	3.43	1.500	38.10	1.135	28.83	0.953	24.21	64.46	286.73	176.80	30.94	C0975-135-1500-S	1.135	28.83	53.70	238.85	147.27	25.77
C0975-135-2000-M	0.975	24.77	0.135	3.43	2.000	50.80	1.487	37.77	1.203	30.56	64.46	286.73	125.70	22.00	C0975-135-2000-S	1.487	37.77	53.70	238.85	104.71	18.32
C0975-135-2500-M	0.975	24.77	0.135	3.43	2.500	63.50	1.839	46.71	1.453	36.91	64.46	286.73	97.50	17.06	C0975-135-2500-S	1.839	46.71	53.70	238.85	81.22	14.21
C0975-135-3000-M	0.975	24.77	0.135	3.43	3.000	76.20	2.191	55.65	1.703	43.26	64.46	286.73	79.70	13.95	C0975-135-3000-S	2.191	55.65	53.70	238.85	66.39	11.62
C0975-135-3500-M	0.975	24.77	0.135	3.43	3.500	88.90	2.543	64.59	1.953	49.61	64.46	286.73	67.30	11.78	C0975-135-3500-S	2.543	64.59	53.70	238.85	56.06	9.81
C0975-135-4000-M	0.975	24.77	0.135	3.43	4.000	101.60	2.895	73.53	2.203	55.96	64.46	286.73	58.30	10.20	C0975-135-4000-S	2.895	73.53	53.70	238.85	48.56	8.50
C0975-148-1000-M	0.975	24.77	0.148	3.76	1.000	25.40	0.820	20.83	0.763	19.38	82.53	367.11	459.00	80.33	C0975-148-1000-S	0.820	20.83	68.75	305.80	382.35	66.91
C0975-148-1500-M	0.975	24.77	0.148	3.76	1.500	38.10	1.193	30.30	1.042	26.47	82.53	367.11	268.40	46.97	C0975-148-1500-S	1.193	30.30	68.75	305.80	223.58	39.13
C0975-148-2000-M	0.975	24.77	0.148	3.76	2.000	50.80	1.565	39.75	1.322	33.58	82.53	367.11	189.60	33.18	C0975-148-2000-S	1.565	39.75	68.75	305.80	157.94	27.64
C0975-148-2500-M	0.975	24.77	0.148	3.76	2.500	63.50	1.937	49.20	1.601	40.67	82.53	367.11	146.60	25.66	C0975-148-2500-S	1.937	49.20	68.75	305.80	122.12	21.37
C0975-148-3000-M	0.975	24.77	0.148	3.76	3.000	76.20	2.309	58.65	1.880	47.75	82.53	367.11	119.50	20.91	C0975-148-3000-S	2.309	58.65	68.75	305.80	99.54	17.42
C0975-148-3500-M	0.975	24.77	0.148	3.76	3.500	88.90	2.682	68.12	2.159	54.84	82.53	367.11	100.90	17.66	C0975-148-3500-S	2.682	68.12	68.75	305.80	84.05	14.71
C0975-148-4000-M	0.975	24.77	0.148	3.76	4.000	101.60	3.054	77.57	2.439	61.95	82.53	367.11	87.20	15.26	C0975-148-4000-S	3.054	77.57	68.75	305.80	72.64	12.71
C0975-162-1500-M	0.975	24.77	0.162	4.12	1.500	38.10	1.246	31.65	1.124	28.55	105.40	468.84	415.20	72.66	C0975-162-1500-S	1.246	31.65	87.80	390.55	345.86	60.53
C0975-162-2000-M	0.975	24.77	0.162	4.12	2.000	50.80	1.638	41.61	1.430	36.32	105.40	468.84	291.30	50.98	C0975-162-2000-S	1.638	41.61	87.80	390.55	242.65	42.46
C0975-162-2500-M	0.975	24.77	0.162	4.12	2.500	63.50	2.030	51.56	1.735	44.07	105.40	468.84	224.40	39.27	C0975-162-2500-S	2.030	51.56	87.80	390.55	186.93	32.71
C0975-162-3000-M	0.975	24.77	0.162	4.12	3.000	76.20	2.422	61.52	2.041	51.84	105.40	468.84	182.50	31.94	C0975-162-3000-S	2.422	61.52	87.80	390.55	152.02	26.60
C0975-162-3500-M	0.975	24.77	0.162	4.12	3.500	88.90	2.814	71.48	2.347	59.61	105.40	468.84	153.70	26.90	C0975-162-3500-S	2.814	71.48	87.80	390.55	128.03	22.41
C0975-162-4000-M	0.975	24.77	0.162	4.12	4.000	101.60	3.206	81.43	2.652	67.36	105.40	468.84	132.80	23.24	C0975-162-4000-S	3.206	81.43	87.80	390.55	110.62	19.36
C0999-085-1750-M	**0.999**	**25.38**	**0.085**	**2.16**	**1.750**	**44.45**	**0.706**	**17.93**	**0.548**	**13.91**	**24.80**	**110.30**	**23.75**	**4.16**	**C0999-085-1750-S**	**0.808**	**20.52**	**19.46**	**86.56**	**20.65**	**3.61**
C0999-085-1875-M	**0.999**	**25.38**	**0.085**	**2.16**	**1.875**	**47.63**	**0.748**	**19.01**	**0.577**	**14.66**	**24.80**	**110.30**	**22.01**	**3.85**	**C0999-085-1875-S**	**0.858**	**21.80**	**19.46**	**86.56**	**19.14**	**3.35**
C0999-085-2000-M	**0.999**	**25.38**	**0.085**	**2.16**	**2.000**	**50.80**	**0.791**	**20.09**	**0.606**	**15.40**	**24.80**	**110.30**	**20.51**	**3.59**	**C0999-085-2000-S**	**0.909**	**23.08**	**19.46**	**86.56**	**17.83**	**3.12**
C0999-085-2125-M	**0.999**	**25.38**	**0.085**	**2.16**	**2.125**	**53.98**	**0.833**	**21.16**	**0.635**	**16.14**	**24.80**	**110.30**	**19.19**	**3.36**	**C0999-085-2125-S**	**0.959**	**24.36**	**19.46**	**86.56**	**16.69**	**2.92**
C0999-085-2250-M	**0.999**	**25.38**	**0.085**	**2.16**	**2.250**	**57.15**	**0.876**	**22.24**	**0.665**	**16.88**	**24.80**	**110.30**	**18.04**	**3.16**	**C0999-085-2250-S**	**1.009**	**25.64**	**19.46**	**86.56**	**15.69**	**2.75**
C0999-085-2375-M	**0.999**	**25.38**	**0.085**	**2.16**	**2.375**	**60.33**	**0.918**	**23.32**	**0.694**	**17.63**	**24.80**	**110.30**	**17.02**	**2.98**	**C0999-085-2375-S**	**1.060**	**26.92**	**19.46**	**86.56**	**14.80**	**2.59**
C0999-085-2500-M	**0.999**	**25.38**	**0.085**	**2.16**	**2.500**	**63.50**	**0.960**	**24.39**	**0.723**	**18.37**	**24.80**	**110.30**	**16.11**	**2.82**	**C0999-085-2500-S**	**1.110**	**28.20**	**19.46**	**86.56**	**14.00**	**2.45**
C0999-085-2625-M	**0.999**	**25.38**	**0.085**	**2.16**	**2.625**	**66.68**	**1.003**	**25.47**	**0.752**	**19.11**	**24.80**	**110.30**	**15.29**	**2.67**	**C0999-085-2625-S**	**1.161**	**29.49**	**19.46**	**86.56**	**13.29**	**2.33**
C0999-085-2750-M	**0.999**	**25.38**	**0.085**	**2.16**	**2.750**	**69.85**	**1.045**	**26.55**	**0.782**	**19.85**	**24.80**	**110.30**	**14.54**	**2.55**	**C0999-085-2750-S**	**1.211**	**30.77**	**19.46**	**86.56**	**12.65**	**2.21**
C0999-085-2875-M	**0.999**	**25.38**	**0.085**	**2.16**	**2.875**	**73.03**	**1.088**	**27.62**	**0.811**	**20.59**	**24.80**	**110.30**	**13.87**	**2.43**	**C0999-085-2875-S**	**1.262**	**32.05**	**19.46**	**86.56**	**12.06**	**2.11**
C0999-085-3000-M	**0.999**	**25.38**	**0.085**	**2.16**	**3.000**	**76.20**	**1.130**	**28.70**	**0.840**	**21.34**	**24.80**	**110.30**	**13.26**	**2.32**	**C0999-085-3000-S**	**1.312**	**33.33**	**19.46**	**86.56**	**11.53**	**2.02**
C0999-085-3250-M	**0.999**	**25.38**	**0.085**	**2.16**	**3.250**	**82.55**	**1.215**	**30.86**	**0.898**	**22.82**	**24.80**	**110.30**	**12.18**	**2.13**	**C0999-085-3250-S**	**1.413**	**35.89**	**19.46**	**86.56**	**10.59**	**1.85**
C0999-085-3500-M	**0.999**	**25.38**	**0.085**	**2.16**	**3.500**	**88.90**	**1.300**	**33.01**	**0.957**	**24.30**	**24.80**	**110.30**	**11.27**	**1.97**	**C0999-085-3500-S**	**1.514**	**38.46**	**19.46**	**86.56**	**9.80**	**1.71**
C0999-085-3750-M	**0.999**	**25.38**	**0.085**	**2.16**	**3.750**	**95.25**	**1.384**	**35.16**	**1.015**	**25.79**	**24.80**	**110.30**	**10.48**	**1.83**	**C0999-085-3750-S**	**1.615**	**41.02**	**19.46**	**86.56**	**9.12**	**1.60**
C0999-085-4000-M	**0.999**	**25.38**	**0.085**	**2.16**	**4.000**	**101.60**	**1.469**	**37.32**	**1.074**	**27.27**	**24.80**	**110.30**	**9.80**	**1.71**	**C0999-085-4000-S**	**1.716**	**43.58**	**19.46**	**86.56**	**8.52**	**1.49**
C0999-085-4250-M	**0.999**	**25.38**	**0.085**	**2.16**	**4.250**	**107.95**	**1.554**	**39.47**	**1.132**	**28.76**	**24.80**	**110.30**	**9.20**	**1.61**	**C0999-085-4250-S**	**1.817**	**46.14**	**19.46**	**86.56**	**8.00**	**1.40**
C0999-085-4500-M	**0.999**	**25.38**	**0.085**	**2.16**	**4.500**	**114.30**	**1.639**	**41.63**	**1.191**	**30.24**	**24.80**	**110.30**	**8.67**	**1.52**	**C0999-085-4500-S**	**1.918**	**48.71**	**19.46**	**86.56**	**7.54**	**1.32**
C0999-085-4750-M	**0.999**	**25.38**	**0.085**	**2.16**	**4.750**	**120.65**	**1.724**	**43.78**	**1.249**	**31.73**	**24.80**	**110.30**	**8.19**	**1.43**	**C0999-085-4750-S**	**2.019**	**51.27**	**19.46**	**86.56**	**7.12**	**1.25**
C0999-085-5000-M	**0.999**	**25.38**	**0.085**	**2.16**	**5.000**	**127.00**	**1.808**	**45.93**	**1.307**	**33.21**	**24.80**	**110.30**	**7.77**	**1.36**	**C0999-085-5000-S**	**2.119**	**53.83**	**19.46**	**86.56**	**6.76**	**1.18**
C0999-085-5250-M	**0.999**	**25.38**	**0.085**	**2.16**	**5.250**	**133.35**	**1.893**	**48.09**	**1.366**	**34.69**	**24.80**	**110.30**	**7.39**	**1.29**	**C0999-085-5250-S**	**2.220**	**56.40**	**19.46**	**86.56**	**6.42**	**1.12**
C0999-085-5500-M	**0.999**	**25.38**	**0.085**	**2.16**	**5.500**	**139.70**	**1.978**	**50.24**	**1.424**	**36.18**	**24.80**	**110.30**	**7.04**	**1.23**	**C0999-085-5500-S**	**2.321**	**58.96**	**19.46**	**86.56**	**6.12**	**1.07**
C0999-085-5750-M	**0.999**	**25.38**	**0.085**	**2.16**	**5.750**	**146.05**	**2.063**	**52.40**	**1.483**	**37.66**	**24.80**	**110.30**	**6.73**	**1.18**	**C0999-085-5750-S**	**2.422**	**61.52**	**19.46**	**86.56**	**5.85**	**1.02**
C0999-085-6000-M	**0.999**	**25.38**	**0.085**	**2.16**	**6.000**	**152.40**	**2.148**	**54.55**	**1.541**	**39.15**	**24.80**	**110.30**	**6.44**	**1.13**	**C0999-085-6000-S**	**2.523**	**64.08**	**19.46**	**86.56**	**5.60**	**0.98**
C0999-085-6250-M	**0.999**	**25.38**	**0.085**	**2.16**	**6.250**	**158.75**	**2.232**	**56.70**	**1.600**	**40.63**	**24.80**	**110.30**	**6.17**	**1.08**	**C0999-085-6250-S**	**2.624**	**66.65**	**19.46**	**86.56**	**5.37**	**0.94**
C0999-085-6500-M	**0.999**	**25.38**	**0.085**	**2.16**	**6.500**	**165.10**	**2.317**	**58.86**	**1.658**	**42.12**	**24.80**	**110.30**	**5.93**	**1.04**	**C0999-085-6500-S**	**2.725**	**69.21**	**19.46**	**86.56**	**5.16**	**0.90**
C0999-085-6750-M	**0.999**	**25.38**	**0.085**	**2.16**	**6.750**	**171.45**	**2.402**	**61.01**	**1.717**	**43.60**	**24.80**	**110.30**	**5.70**	**1.00**	**C0999-085-6750-S**	**2.826**	**71.77**	**19.46**	**86.56**	**4.96**	**0.87**
C0999-085-7000-M	**0.999**	**25.38**	**0.085**	**2.16**	**7.000**	**177.80**	**2.487**	**63.17**	**1.775**	**45.08**	**24.80**	**110.30**	**5.49**	**0.96**	**C0999-085-7000-S**	**2.927**	**74.34**	**19.46**	**86.56**	**4.78**	**0.84**
C0999-085-7500-M	**0.999**	**25.38**	**0.085**	**2.16**	**7.500**	**190.50**	**2.656**	**67.47**	**1.892**	**48.05**	**24.80**	**110.30**	**5.12**	**0.90**	**C0999-085-7500-S**	**3.128**	**79.46**	**19.46**	**86.56**	**4.45**	**0.78**
C0999-085-8000-M	**0.999**	**25.38**	**0.085**	**2.16**	**8.000**	**203.20**	**2.826**	**71.78**	**2.009**	**51.02**	**24.80**	**110.30**	**4.79**	**0.84**	**C0999-085-8000-S**	**3.330**	**84.59**	**19.46**	**86.56**	**4.17**	**0.73**
C0999-085-8500-M	**0.999**	**25.38**	**0.085**	**2.16**	**8.500**	**215.90**	**2.996**	**76.09**	**2.126**	**53.99**	**24.80**	**110.30**	**4.51**	**0.79**	**C0999-085-8500-S**	**3.532**	**89.71**	**19.46**	**86.56**	**3.92**	**0.69**
C0999-085-9000-M	**0.999**	**25.38**	**0.085**	**2.16**	**9.000**	**228.60**	**3.165**	**80.40**	**2.242**	**56.96**	**24.80**	**110.30**	**4.25**	**0.74**	**C0999-085-9000-S**	**3.734**	**94.84**	**19.46**	**86.56**	**3.70**	**0.65**
C0999-085-9500-M	**0.999**	**25.38**	**0.085**	**2.16**	**9.500**	**241.30**	**3.335**	**84.71**	**2.359**	**59.93**	**24.80**	**110.30**	**4.02**	**0.70**	**C0999-085-9500-S**	**3.936**	**99.97**	**19.46**	**86.56**	**3.50**	**0.61**
C0999-092-1625-M	**0.999**	**25.38**	**0.092**	**2.34**	**1.625**	**41.28**	**0.717**	**18.22**	**0.585**	**14.86**	**30.90**	**137.44**	**34.04**	**5.96**	**C0999-092-1625-S**	**0.809**	**20.55**	**24.15**	**107.40**	**29.60**	**5.18**
C0999-092-1750-M	**0.999**	**25.38**	**0.092**	**2.34**	**1.750**	**44.45**	**0.764**	**19.39**	**0.619**	**15.72**	**30.90**	**137.44**	**31.32**	**5.48**	**C0999-092-1750-S**	**0.863**	**21.93**	**24.15**	**107.40**	**27.24**	**4.77**
C0999-092-1875-M	**0.999**	**25.38**	**0.092**	**2.34**	**1.875**	**47.63**	**0.810**	**20.57**	**0.653**	**16.58**	**30.90**	**137.44**	**29.01**	**5.08**	**C0999-092-1875-S**	**0.918**	**23.31**	**24.15**	**107.40**	**25.22**	**4.41**
C0999-092-2000-M	**0.999**	**25.38**	**0.092**	**2.34**	**2.000**	**50.80**	**0.856**	**21.74**	**0.687**	**17.45**	**30.90**	**137.44**	**27.01**	**4.73**	**C0999-092-2000-S**	**0.972**	**24.69**	**24.15**	**107.40**	**23.49**	**4.11**
C0999-092-2125-M	**0.999**	**25.38**	**0.092**	**2.34**	**2.125**	**53.98**	**0.902**	**22.92**	**0.721**	**18.31**	**30.90**	**137.44**	**25.27**	**4.42**	**C0999-092-2125-S**	**1.026**	**26.06**	**24.15**	**107.40**	**21.97**	**3.85**
C0999-092-2250-M	**0.999**	**25.38**	**0.092**	**2.34**	**2.250**	**57.15**	**0.949**	**24.09**	**0.755**	**19.17**	**30.90**	**137.44**	**23.74**	**4.15**	**C0999-092-2250-S**	**1.080**	**27.44**	**24.15**	**107.40**	**20.64**	**3.61**
C0999-092-2375-M	**0.999**	**25.38**	**0.092**	**2.34**	**2.375**	**60.33**	**0.995**	**25.27**	**0.789**	**20.03**	**30.90**	**137.44**	**22.39**	**3.92**	**C0999-092-2375-S**	**1.135**	**28.82**	**24.15**	**107.40**	**19.47**	**3.41**
C0999-092-2500-M	**0.999**	**25.38**	**0.092**	**2.34**	**2.500**	**63.50**	**1.041**	**26.44**	**0.823**	**20.90**	**30.90**	**137.44**	**21.18**	**3.71**	**C0999-092-2500-S**	**1.189**	**30.20**	**24.15**	**107.40**	**18.42**	**3.22**
C0999-092-2625-M	**0.999**	**25.38**	**0.092**	**2.34**	**2.625**	**66.68**	**1.087**	**27.62**	**0.857**	**21.76**	**30.90**	**137.44**	**20.09**	**3.52**	**C0999-092-2625-S**	**1.243**	**31.57**	**24.15**	**107.40**	**17.47**	**3.06**
C0999-092-2750-M	**0.999**	**25.38**	**0.092**	**2.34**	**2.750**	**69.85**	**1.134**	**28.79**	**0.891**	**22.62**	**30.90**	**137.44**	**19.11**	**3.34**	**C0999-092-2750-S**	**1.297**	**32.95**	**24.15**	**107.40**	**16.62**	**2.91**
C0999-092-2875-M	**0.999**	**25.38**	**0.092**	**2.34**	**2.875**	**73.03**	**1.180**	**29.97**	**0.925**	**23.49**	**30.90**	**137.44**	**18.23**	**3.19**	**C0999-092-2875-S**	**1.352**	**34.33**	**24.15**	**107.40**	**15.85**	**2.77**

FOR INFORMATION ON ALTERNATIVE FINISHES, SEE PAGE 311

Part Numbers with an "*" are squared and not ground. **Part Numbers in bold** represent the newly expanded Associated Spring RAYMOND compression spring offering.

MUSIC WIRE

Catalog #	Outside Diameter (OD)		Wire Diameter (d)		Free Length (L) Approx		Load Length (L_1)		Solid Height (Sh) Approx		Load (P) at L_1		Spring Rate (R)	
	in	mm	in	mm	in	mm	in	mm	in	mm	lb	N	lb/in	N/mm
C0999-092-3000-M	0.999	25.38	0.092	2.34	3.000	76.20	1.226	31.14	0.959	24.35	30.90	137.44	17.42	3.05
C0999-092-3250-M	0.999	25.38	0.092	2.34	3.250	82.55	1.319	33.49	1.027	26.08	30.90	137.44	16.00	2.80
C0999-092-3500-M	0.999	25.38	0.092	2.34	3.500	88.90	1.411	35.84	1.095	27.80	30.90	137.44	14.79	2.59
C0999-092-3750-M	0.999	25.38	0.092	2.34	3.750	95.25	1.504	38.19	1.163	29.53	30.90	137.44	13.75	2.41
C0999-092-4000-M	0.999	25.38	0.092	2.34	4.000	101.60	1.596	40.54	1.231	31.25	30.90	137.44	12.85	2.25
C0999-092-4250-M	0.999	25.38	0.092	2.34	4.250	107.95	1.689	42.89	1.298	32.98	30.90	137.44	12.06	2.11
C0999-092-4500-M	0.999	25.38	0.092	2.34	4.500	114.30	1.781	45.24	1.366	34.71	30.90	137.44	11.36	1.99
C0999-092-4750-M	0.999	25.38	0.092	2.34	4.750	120.65	1.874	47.59	1.434	36.43	30.90	137.44	10.74	1.88
C0999-092-5000-M	0.999	25.38	0.092	2.34	5.000	127.00	1.966	49.94	1.502	38.16	30.90	137.44	10.18	1.78
C0999-092-5250-M	0.999	25.38	0.092	2.34	5.250	133.35	2.059	52.29	1.570	39.89	30.90	137.44	9.68	1.69
C0999-092-5500-M	0.999	25.38	0.092	2.34	5.500	139.70	2.151	54.64	1.638	41.61	30.90	137.44	9.23	1.61
C0999-092-5750-M	0.999	25.38	0.092	2.34	5.750	146.05	2.244	56.99	1.706	43.34	30.90	137.44	8.81	1.54
C0999-092-6000-M	0.999	25.38	0.092	2.34	6.000	152.40	2.336	59.34	1.774	45.06	30.90	137.44	8.43	1.48
C0999-092-6250-M	0.999	25.38	0.092	2.34	6.250	158.75	2.429	61.69	1.842	46.79	30.90	137.44	8.09	1.42
C0999-092-6500-M	0.999	25.38	0.092	2.34	6.500	165.10	2.521	64.04	1.910	48.52	30.90	137.44	7.77	1.36
C0999-092-6750-M	0.999	25.38	0.092	2.34	6.750	171.45	2.614	66.39	1.978	50.24	30.90	137.44	7.47	1.31
C0999-092-7000-M	0.999	25.38	0.092	2.34	7.000	177.80	2.706	68.74	2.046	51.97	30.90	137.44	7.20	1.26
C0999-092-7500-M	0.999	25.38	0.092	2.34	7.500	190.50	2.891	73.44	2.182	55.42	30.90	137.44	6.70	1.17
C0999-092-8000-M	0.999	25.38	0.092	2.34	8.000	203.20	3.076	78.14	2.318	58.87	30.90	137.44	6.28	1.10
C0999-092-8500-M*	0.999	25.38	0.092	2.34	8.500	215.90	3.319	84.31	2.525	64.14	30.90	137.44	5.96	1.04
C0999-092-9000-M*	0.999	25.38	0.092	2.34	9.000	228.60	3.504	89.01	2.661	67.60	30.90	137.44	5.62	0.98
C0999-092-9500-M*	0.999	25.38	0.092	2.34	9.500	241.30	3.689	93.71	2.797	71.05	30.90	137.44	5.32	0.93
C0999-098-1625-M	0.999	25.38	0.098	2.49	1.625	41.28	0.764	19.40	0.642	16.31	36.82	163.77	42.74	7.48
C0999-098-1750-M	0.999	25.38	0.098	2.49	1.750	44.45	0.813	20.66	0.680	17.28	36.82	163.77	39.31	6.88
C0999-098-1875-M	0.999	25.38	0.098	2.49	1.875	47.63	0.863	21.92	0.719	18.25	36.82	163.77	36.38	6.37
C0999-098-2000-M	0.999	25.38	0.098	2.49	2.000	50.80	0.913	23.18	0.757	19.22	36.82	163.77	33.86	5.93
C0999-098-2125-M	0.999	25.38	0.098	2.49	2.125	53.98	0.962	24.44	0.795	20.19	36.82	163.77	31.66	5.54
C0999-098-2250-M	0.999	25.38	0.098	2.49	2.250	57.15	1.012	25.70	0.833	21.16	36.82	163.77	29.74	5.20
C0999-098-2375-M	0.999	25.38	0.098	2.49	2.375	60.33	1.062	26.96	0.871	22.13	36.82	163.77	28.03	4.91
C0999-098-2500-M	0.999	25.38	0.098	2.49	2.500	63.50	1.111	28.22	0.909	23.10	36.82	163.77	26.51	4.64
C0999-098-2625-M	0.999	25.38	0.098	2.49	2.625	66.68	1.161	29.49	0.948	24.07	36.82	163.77	25.15	4.40
C0999-098-2750-M	0.999	25.38	0.098	2.49	2.750	69.85	1.210	30.75	0.986	25.04	36.82	163.77	23.92	4.19
C0999-098-2875-M	0.999	25.38	0.098	2.49	2.875	73.03	1.260	32.01	1.024	26.01	36.82	163.77	22.80	3.99
C0999-098-3000-M	0.999	25.38	0.098	2.49	3.000	76.20	1.310	33.27	1.062	26.98	36.82	163.77	21.78	3.81
C0999-098-3250-M	0.999	25.38	0.098	2.49	3.250	82.55	1.409	35.79	1.138	28.92	36.82	163.77	20.00	3.50
C0999-098-3500-M	0.999	25.38	0.098	2.49	3.500	88.90	1.508	38.31	1.215	30.86	36.82	163.77	18.49	3.24
C0999-098-3750-M	0.999	25.38	0.098	2.49	3.750	95.25	1.608	40.84	1.291	32.80	36.82	163.77	17.19	3.01
C0999-098-4000-M	0.999	25.38	0.098	2.49	4.000	101.60	1.707	43.36	1.367	34.73	36.82	163.77	16.06	2.81
C0999-098-4250-M	0.999	25.38	0.098	2.49	4.250	107.95	1.806	45.88	1.444	36.67	36.82	163.77	15.07	2.64
C0999-098-4500-M	0.999	25.38	0.098	2.49	4.500	114.30	1.906	48.40	1.520	38.61	36.82	163.77	14.19	2.48
C0999-098-4750-M	0.999	25.38	0.098	2.49	4.750	120.65	2.005	50.93	1.597	40.55	36.82	163.77	13.41	2.35
C0999-098-5000-M	0.999	25.38	0.098	2.49	5.000	127.00	2.104	53.45	1.673	42.49	36.82	163.77	12.71	2.22
C0999-098-5250-M	0.999	25.38	0.098	2.49	5.250	133.35	2.204	55.97	1.749	44.43	36.82	163.77	12.09	2.11
C0999-098-5500-M	0.999	25.38	0.098	2.49	5.500	139.70	2.303	58.49	1.826	46.37	36.82	163.77	11.52	2.02
C0999-098-5750-M	0.999	25.38	0.098	2.49	5.750	146.05	2.402	61.01	1.902	48.31	36.82	163.77	11.00	1.92
C0999-098-6000-M	0.999	25.38	0.098	2.49	6.000	152.40	2.501	63.54	1.978	50.25	36.82	163.77	10.52	1.84
C0999-098-6250-M	0.999	25.38	0.098	2.49	6.250	158.75	2.601	66.06	2.055	52.19	36.82	163.77	10.09	1.77
C0999-098-6500-M	0.999	25.38	0.098	2.49	6.500	165.10	2.700	68.58	2.131	54.13	36.82	163.77	9.69	1.70
C0999-098-6750-M	0.999	25.38	0.098	2.49	6.750	171.45	2.799	71.10	2.207	56.07	36.82	163.77	9.32	1.63
C0999-098-7000-M	0.999	25.38	0.098	2.49	7.000	177.80	2.899	73.63	2.284	58.01	36.82	163.77	8.98	1.57
C0999-098-7500-M*	0.999	25.38	0.098	2.49	7.500	190.50	3.156	80.17	2.509	63.74	36.82	163.77	8.48	1.48
C0999-098-8000-M*	0.999	25.38	0.098	2.49	8.000	203.20	3.355	85.22	2.662	67.62	36.82	163.77	7.93	1.39
C0999-098-8500-M*	0.999	25.38	0.098	2.49	8.500	215.90	3.554	90.26	2.815	71.49	36.82	163.77	7.44	1.30
C0999-098-9000-M*	0.999	25.38	0.098	2.49	9.000	228.60	3.752	95.31	2.967	75.37	36.82	163.77	7.02	1.23
C0999-098-9500-M*	0.999	25.38	0.098	2.49	9.500	241.30	3.951	100.35	3.120	79.25	36.82	163.77	6.64	1.16
C0999-105-1500-M	0.999	25.38	0.105	2.67	1.500	38.10	0.764	19.40	0.666	16.91	44.57	198.26	60.55	10.60
C0999-105-1625-M	0.999	25.38	0.105	2.67	1.625	41.28	0.818	20.77	0.709	18.01	44.57	198.26	55.20	9.66
C0999-105-1750-M	0.999	25.38	0.105	2.67	1.750	44.45	0.871	22.13	0.752	19.10	44.57	198.26	50.72	8.88
C0999-105-1875-M	0.999	25.38	0.105	2.67	1.875	47.63	0.925	23.49	0.795	20.20	44.57	198.26	46.91	8.21
C0999-105-2000-M	0.999	25.38	0.105	2.67	2.000	50.80	0.979	24.86	0.838	21.29	44.57	198.26	43.64	7.64
C0999-105-2125-M	0.999	25.38	0.105	2.67	2.125	53.98	1.032	26.22	0.881	22.39	44.57	198.26	40.79	7.14
C0999-105-2250-M	0.999	25.38	0.105	2.67	2.250	57.15	1.086	27.58	0.925	23.49	44.57	198.26	38.29	6.70
C0999-105-2375-M	0.999	25.38	0.105	2.67	2.375	60.33	1.140	28.95	0.968	24.58	44.57	198.26	36.08	6.31
C0999-105-2500-M	0.999	25.38	0.105	2.67	2.500	63.50	1.193	30.31	1.011	25.68	44.57	198.26	34.11	5.97

STAINLESS STEEL

Catalog #	Load Length (L_1)		Load (P) at L_1		Spring Rate (R)	
	in	mm	lb	N	lb/in	N/mm
C0999-092-3000-S	1.406	35.71	24.15	107.40	15.15	2.65
C0999-092-3250-S	1.514	38.46	24.15	107.40	13.91	2.43
C0999-092-3500-S	1.623	41.22	24.15	107.40	12.86	2.25
C0999-092-3750-S	1.731	43.97	24.15	107.40	11.96	2.09
C0999-092-4000-S	1.840	46.73	24.15	107.40	11.18	1.96
C0999-092-4250-S	1.948	49.48	24.15	107.40	10.49	1.84
C0999-092-4500-S	2.057	52.24	24.15	107.40	9.88	1.73
C0999-092-4750-S	2.165	54.99	24.15	107.40	9.34	1.63
C0999-092-5000-S	2.274	57.75	24.15	107.40	8.86	1.55
C0999-092-5250-S	2.382	60.50	24.15	107.40	8.42	1.47
C0999-092-5500-S	2.490	63.26	24.15	107.40	8.02	1.40
C0999-092-5750-S	2.599	66.01	24.15	107.40	7.66	1.34
C0999-092-6000-S	2.707	68.77	24.15	107.40	7.33	1.28
C0999-092-6250-S	2.816	71.52	24.15	107.40	7.03	1.23
C0999-092-6500-S	2.924	74.28	24.15	107.40	6.75	1.18
C0999-092-6750-S	3.033	77.03	24.15	107.40	6.50	1.14
C0999-092-7000-S	3.141	79.79	24.15	107.40	6.26	1.09
C0999-092-7500-S	3.358	85.30	24.15	107.40	5.83	1.02
C0999-092-8000-S	3.575	90.81	24.15	107.40	5.46	0.95
C0999-092-8500-S*	3.844	97.64	24.15	107.40	5.19	0.91
C0999-092-9000-S*	4.061	103.15	24.15	107.40	4.89	0.86
C0999-092-9500-S*	4.278	108.66	24.15	107.40	4.62	0.81
C0999-098-1625-S	0.854	21.69	28.66	127.48	37.17	6.50
C0999-098-1750-S	0.911	23.15	28.66	127.48	34.18	5.98
C0999-098-1875-S	0.969	24.61	28.66	127.48	31.63	5.54
C0999-098-2000-S	1.027	26.07	28.66	127.48	29.44	5.15
C0999-098-2125-S	1.084	27.54	28.66	127.48	27.53	4.82
C0999-098-2250-S	1.142	29.00	28.66	127.48	25.86	4.53
C0999-098-2375-S	1.199	30.46	28.66	127.48	24.38	4.27
C0999-098-2500-S	1.257	31.92	28.66	127.48	23.05	4.03
C0999-098-2625-S	1.314	33.38	28.66	127.48	21.87	3.83
C0999-098-2750-S	1.372	34.85	28.66	127.48	20.80	3.64
C0999-098-2875-S	1.429	36.31	28.66	127.48	19.83	3.47
C0999-098-3000-S	1.487	37.77	28.66	127.48	18.94	3.31
C0999-098-3250-S	1.602	40.69	28.66	127.48	17.39	3.04
C0999-098-3500-S	1.717	43.62	28.66	127.48	16.08	2.81
C0999-098-3750-S	1.832	46.54	28.66	127.48	14.95	2.62
C0999-098-4000-S	1.947	49.46	28.66	127.48	13.96	2.44
C0999-098-4250-S	2.062	52.39	28.66	127.48	13.10	2.29
C0999-098-4500-S	2.178	55.31	28.66	127.48	12.34	2.16
C0999-098-4750-S	2.293	58.23	28.66	127.48	11.66	2.04
C0999-098-5000-S	2.408	61.16	28.66	127.48	11.06	1.93
C0999-098-5250-S	2.523	64.08	28.66	127.48	10.51	1.84
C0999-098-5500-S	2.638	67.00	28.66	127.48	10.01	1.75
C0999-098-5750-S	2.753	69.93	28.66	127.48	9.56	1.67
C0999-098-6000-S	2.868	72.85	28.66	127.48	9.15	1.60
C0999-098-6250-S	2.983	75.78	28.66	127.48	8.77	1.54
C0999-098-6500-S	3.098	78.70	28.66	127.48	8.43	1.47
C0999-098-6750-S	3.213	81.62	28.66	127.48	8.10	1.42
C0999-098-7000-S	3.329	84.55	28.66	127.48	7.81	1.37
C0999-098-7500-S*	3.612	91.74	28.66	127.48	7.37	1.29
C0999-098-8000-S*	3.842	97.58	28.66	127.48	6.89	1.21
C0999-098-8500-S*	4.072	103.43	28.66	127.48	6.47	1.13
C0999-098-9000-S*	4.302	109.28	28.66	127.48	6.10	1.07
C0999-098-9500-S*	4.532	115.13	28.66	127.48	5.77	1.01
C0999-105-1500-S	0.844	21.44	34.53	153.59	52.65	9.21
C0999-105-1625-S	0.906	23.00	34.53	153.59	48.00	8.40
C0999-105-1750-S	0.967	24.57	34.53	153.59	44.11	7.72
C0999-105-1875-S	1.029	26.13	34.53	153.59	40.80	7.14
C0999-105-2000-S	1.090	27.69	34.53	153.59	37.95	6.64
C0999-105-2125-S	1.152	29.25	34.53	153.59	35.47	6.21
C0999-105-2250-S	1.213	30.81	34.53	153.59	33.30	5.83
C0999-105-2375-S	1.274	32.37	34.53	153.59	31.37	5.49
C0999-105-2500-S	1.336	33.93	34.53	153.59	29.66	5.19

Part Numbers with an "*" are squared and not ground. **Part Numbers in bold** represent the newly expanded Associated Spring RAYMOND compression spring offering.

MUSIC WIRE															STAINLESS STEEL					
Catalog #	Outside Diameter (OD)		Wire Diameter (d)		Free Length (L) Approx		Load Length (L_1)		Solid Height (Sh) Approx		Load (P) at L_1		Spring Rate (R)		Catalog #	Load Length (L_1)		Load (P) at L_1		Spring Rate (R)	
	in	mm	in	mm	in	mm	in	mm	in	mm	lb	N	lb/in	N/mm		in	mm	lb	N	lb/in	N/mm
C0999-105-2625-M	0.999	25.38	0.105	2.67	2.625	66.68	1.247	31.67	1.054	26.77	44.57	198.26	32.34	5.66	**C0999-105-2625-S**	1.397	35.49	34.53	153.59	28.13	4.92
C0999-105-2750-M	0.999	25.38	0.105	2.67	2.750	69.85	1.301	33.04	1.097	27.87	44.57	198.26	30.75	5.38	**C0999-105-2750-S**	1.459	37.05	34.53	153.59	26.74	4.68
C0999-105-2875-M	0.999	25.38	0.105	2.67	2.875	73.03	1.354	34.40	1.140	28.96	44.57	198.26	29.31	5.13	**C0999-105-2875-S**	1.520	38.61	34.53	153.59	25.49	4.46
C0999-105-3000-M	0.999	25.38	0.105	2.67	3.000	76.20	1.408	35.76	1.183	30.06	44.57	198.26	28.00	4.90	**C0999-105-3000-S**	1.582	40.18	34.53	153.59	24.35	4.26
C0999-105-3250-M	0.999	25.38	0.105	2.67	3.250	82.55	1.515	38.49	1.270	32.25	44.57	198.26	25.70	4.50	**C0999-105-3250-S**	1.705	43.30	34.53	153.59	22.34	3.91
C0999-105-3500-M	0.999	25.38	0.105	2.67	3.500	88.90	1.623	41.22	1.356	34.44	44.57	198.26	23.74	4.15	**C0999-105-3500-S**	1.828	46.42	34.53	153.59	20.65	3.61
C0999-105-3750-M	0.999	25.38	0.105	2.67	3.750	95.25	1.730	43.94	1.442	36.64	44.57	198.26	22.07	3.86	**C0999-105-3750-S**	1.950	49.54	34.53	153.59	19.19	3.36
C0999-105-4000-M	0.999	25.38	0.105	2.67	4.000	101.60	1.837	46.67	1.529	38.83	44.57	198.26	20.61	3.61	**C0999-105-4000-S**	2.073	52.66	34.53	153.59	17.92	3.14
C0999-105-4250-M	0.999	25.38	0.105	2.67	4.250	107.95	1.945	49.40	1.615	41.02	44.57	198.26	19.34	3.38	**C0999-105-4250-S**	2.196	55.78	34.53	153.59	16.81	2.94
C0999-105-4500-M	0.999	25.38	0.105	2.67	4.500	114.30	2.052	52.13	1.701	43.21	44.57	198.26	18.21	3.19	**C0999-105-4500-S**	2.319	58.91	34.53	153.59	15.83	2.77
C0999-105-4750-M	0.999	25.38	0.105	2.67	4.750	120.65	2.160	54.85	1.788	45.40	44.57	198.26	17.21	3.01	**C0999-105-4750-S**	2.442	62.03	34.53	153.59	14.96	2.62
C0999-105-5000-M	0.999	25.38	0.105	2.67	5.000	127.00	2.267	57.58	1.874	47.59	44.57	198.26	16.31	2.85	**C0999-105-5000-S**	2.565	65.15	34.53	153.59	14.18	2.48
C0999-105-5250-M	0.999	25.38	0.105	2.67	5.250	133.35	2.374	60.31	1.960	49.79	44.57	198.26	15.50	2.71	**C0999-105-5250-S**	2.688	68.27	34.53	153.59	13.48	2.36
C0999-105-5500-M	0.999	25.38	0.105	2.67	5.500	139.70	2.482	63.03	2.046	51.98	44.57	198.26	14.77	2.58	**C0999-105-5500-S**	2.811	71.39	34.53	153.59	12.84	2.25
C0999-105-5750-M	0.999	25.38	0.105	2.67	5.750	146.05	2.589	65.76	2.133	54.17	44.57	198.26	14.10	2.47	**C0999-105-5750-S**	2.934	74.52	34.53	153.59	12.26	2.15
C0999-105-6000-M	0.999	25.38	0.105	2.67	6.000	152.40	2.696	68.49	2.219	56.36	44.57	198.26	13.49	2.36	**C0999-105-6000-S**	3.057	77.64	34.53	153.59	11.73	2.05
C0999-105-6250-M	0.999	25.38	0.105	2.67	6.250	158.75	2.804	71.21	2.305	58.55	44.57	198.26	12.93	2.26	**C0999-105-6250-S**	3.180	80.76	34.53	153.59	11.25	1.97
C0999-105-6500-M	0.999	25.38	0.105	2.67	6.500	165.10	2.911	73.94	2.392	60.74	44.57	198.26	12.42	2.17	**C0999-105-6500-S**	3.302	83.88	34.53	153.59	10.80	1.89
C0999-105-6750-M	0.999	25.38	0.105	2.67	6.750	171.45	3.018	76.67	2.478	62.94	44.57	198.26	11.94	2.09	**C0999-105-6750-S**	3.425	87.00	34.53	153.59	10.39	1.82
C0999-105-7000-M	0.999	25.38	0.105	2.67	7.000	177.80	3.126	79.39	2.564	65.13	44.57	198.26	11.50	2.01	**C0999-105-7000-S**	3.548	90.13	34.53	153.59	10.00	1.75
C0999-105-7500-M	0.999	25.38	0.105	2.67	7.500	190.50	3.340	84.85	2.737	69.51	44.57	198.26	10.72	1.88	**C0999-105-7500-S**	3.794	96.37	34.53	153.59	9.32	1.63
C0999-105-8000-M	0.999	25.38	0.105	2.67	8.000	203.20	3.555	90.30	2.909	73.90	44.57	198.26	10.03	1.75	**C0999-105-8000-S**	4.040	102.61	34.53	153.59	8.72	1.53
C0999-105-8500-M*	0.999	25.38	0.105	2.67	8.500	215.90	3.830	97.28	3.156	80.16	44.57	198.26	9.54	1.67	**C0999-105-8500-S***	4.339	110.21	34.53	153.59	8.30	1.45
C0999-105-9000-M*	0.999	25.38	0.105	2.67	9.000	228.60	4.044	102.73	3.328	84.54	44.57	198.26	8.99	1.57	**C0999-105-9000-S***	4.585	116.46	34.53	153.59	7.82	1.37
C0999-105-9500-M*	0.999	25.38	0.105	2.67	9.500	241.30	4.259	108.18	3.501	88.93	44.57	198.26	8.50	1.49	**C0999-105-9500-S***	4.831	122.70	34.53	153.59	7.40	1.29
C0999-112-1500-M	0.999	25.38	0.112	2.85	1.500	38.10	0.813	20.66	0.727	18.46	53.27	236.96	77.57	13.57	**C0999-112-1500-S**	0.891	22.63	41.07	182.68	67.45	11.80
C0999-112-1625-M	0.999	25.38	0.112	2.85	1.625	41.28	0.871	22.12	0.775	19.68	53.27	236.96	70.65	12.36	**C0999-112-1625-S**	0.956	24.29	41.07	182.68	61.43	10.75
C0999-112-1750-M	0.999	25.38	0.112	2.85	1.750	44.45	0.929	23.59	0.823	20.90	53.27	236.96	64.86	11.35	**C0999-112-1750-S**	1.022	25.95	41.07	182.68	56.40	9.87
C0999-112-1875-M	0.999	25.38	0.112	2.85	1.875	47.63	0.986	25.05	0.871	22.12	53.27	236.96	59.95	10.49	**C0999-112-1875-S**	1.087	27.61	41.07	182.68	52.13	9.12
C0999-112-2000-M	0.999	25.38	0.112	2.85	2.000	50.80	1.044	26.52	0.919	23.35	53.27	236.96	55.73	9.75	**C0999-112-2000-S**	1.153	29.27	41.07	182.68	48.46	8.48
C0999-112-2125-M	0.999	25.38	0.112	2.85	2.125	53.98	1.102	27.99	0.967	24.57	53.27	236.96	52.06	9.11	**C0999-112-2125-S**	1.218	30.93	41.07	182.68	45.27	7.92
C0999-112-2250-M	0.999	25.38	0.112	2.85	2.250	57.15	1.160	29.45	1.015	25.79	53.27	236.96	48.85	8.55	**C0999-112-2250-S**	1.283	32.59	41.07	182.68	42.48	7.43
C0999-112-2375-M	0.999	25.38	0.112	2.85	2.375	60.33	1.217	30.92	1.064	27.02	53.27	236.96	46.01	8.05	**C0999-112-2375-S**	1.349	34.25	41.07	182.68	40.01	7.00
C0999-112-2500-M	0.999	25.38	0.112	2.85	2.500	63.50	1.275	32.38	1.112	28.24	53.27	236.96	43.49	7.61	**C0999-112-2500-S**	1.414	35.91	41.07	182.68	37.81	6.62
C0999-112-2625-M	0.999	25.38	0.112	2.85	2.625	66.68	1.333	33.85	1.160	29.46	53.27	236.96	41.22	7.21	**C0999-112-2625-S**	1.479	37.57	41.07	182.68	35.85	6.27
C0999-112-2750-M	0.999	25.38	0.112	2.85	2.750	69.85	1.390	35.32	1.208	30.68	53.27	236.96	39.18	6.86	**C0999-112-2750-S**	1.545	39.23	41.07	182.68	34.07	5.96
C0999-112-2875-M	0.999	25.38	0.112	2.85	2.875	73.03	1.448	36.78	1.256	31.91	53.27	236.96	37.34	6.53	**C0999-112-2875-S**	1.610	40.89	41.07	182.68	32.47	5.68
C0999-112-3000-M	0.999	25.38	0.112	2.85	3.000	76.20	1.506	38.25	1.304	33.13	53.27	236.96	35.65	6.24	**C0999-112-3000-S**	1.675	42.55	41.07	182.68	31.00	5.43
C0999-112-3250-M	0.999	25.38	0.112	2.85	3.250	82.55	1.621	41.18	1.401	35.57	53.27	236.96	32.71	5.72	**C0999-112-3250-S**	1.806	45.87	41.07	182.68	28.44	4.98
C0999-112-3500-M	0.999	25.38	0.112	2.85	3.500	88.90	1.737	44.11	1.497	38.02	53.27	236.96	30.21	5.29	**C0999-112-3500-S**	1.937	49.19	41.07	182.68	26.27	4.60
C0999-112-3750-M	0.999	25.38	0.112	2.85	3.750	95.25	1.852	47.05	1.593	40.47	53.27	236.96	28.07	4.91	**C0999-112-3750-S**	2.067	52.51	41.07	182.68	24.41	4.27
C0999-112-4000-M	0.999	25.38	0.112	2.85	4.000	101.60	1.968	49.98	1.689	42.91	53.27	236.96	26.21	4.59	**C0999-112-4000-S**	2.198	55.83	41.07	182.68	22.79	3.99
C0999-112-4250-M	0.999	25.38	0.112	2.85	4.250	107.95	2.083	52.91	1.786	45.36	53.27	236.96	24.58	4.30	**C0999-112-4250-S**	2.329	59.15	41.07	182.68	21.38	3.74
C0999-112-4500-M	0.999	25.38	0.112	2.85	4.500	114.30	2.198	55.84	1.882	47.80	53.27	236.96	23.15	4.05	**C0999-112-4500-S**	2.460	62.47	41.07	182.68	20.13	3.52
C0999-112-4750-M	0.999	25.38	0.112	2.85	4.750	120.65	2.314	58.77	1.978	50.25	53.27	236.96	21.87	3.83	**C0999-112-4750-S**	2.590	65.79	41.07	182.68	19.02	3.33
C0999-112-5000-M	0.999	25.38	0.112	2.85	5.000	127.00	2.429	61.71	2.075	52.69	53.27	236.96	20.72	3.63	**C0999-112-5000-S**	2.721	69.11	41.07	182.68	18.02	3.15
C0999-112-5250-M	0.999	25.38	0.112	2.85	5.250	133.35	2.545	64.64	2.171	55.14	53.27	236.96	19.69	3.45	**C0999-112-5250-S**	2.852	72.43	41.07	182.68	17.12	3.00
C0999-112-5500-M	0.999	25.38	0.112	2.85	5.500	139.70	2.660	67.57	2.267	57.58	53.27	236.96	18.76	3.28	**C0999-112-5500-S**	2.982	75.75	41.07	182.68	16.31	2.85
C0999-112-5750-M	0.999	25.38	0.112	2.85	5.750	146.05	2.776	70.50	2.363	60.03	53.27	236.96	17.91	3.13	**C0999-112-5750-S**	3.113	79.07	41.07	182.68	15.57	2.73
C0999-112-6000-M	0.999	25.38	0.112	2.85	6.000	152.40	2.891	73.43	2.460	62.47	53.27	236.96	17.14	3.00	**C0999-112-6000-S**	3.244	82.39	41.07	182.68	14.90	2.61
C0999-112-6250-M	0.999	25.38	0.112	2.85	6.250	158.75	3.007	76.37	2.556	64.92	53.27	236.96	16.43	2.87	**C0999-112-6250-S**	3.375	85.71	41.07	182.68	14.28	2.50
C0999-112-6500-M	0.999	25.38	0.112	2.85	6.500	165.10	3.122	79.30	2.652	67.37	53.27	236.96	15.77	2.76	**C0999-112-6500-S**	3.505	89.03	41.07	182.68	13.71	2.40
C0999-112-6750-M	0.999	25.38	0.112	2.85	6.750	171.45	3.237	82.23	2.748	69.81	53.27	236.96	15.17	2.65	**C0999-112-6750-S**	3.636	92.35	41.07	182.68	13.19	2.31
C0999-112-7000-M	0.999	25.38	0.112	2.85	7.000	177.80	3.353	85.16	2.845	72.26	53.27	236.96	14.61	2.56	**C0999-112-7000-S**	3.767	95.67	41.07	182.68	12.70	2.22
C0999-112-7500-M	0.999	25.38	0.112	2.85	7.500	190.50	3.584	91.03	3.037	77.15	53.27	236.96	13.60	2.38	**C0999-112-7500-S**	4.028	102.31	41.07	182.68	11.83	2.07
C0999-112-8000-M	0.999	25.38	0.112	2.85	8.000	203.20	3.815	96.89	3.230	82.04	53.27	236.96	12.73	2.23	**C0999-112-8000-S**	4.289	108.95	41.07	182.68	11.07	1.94
C0999-112-8500-M	0.999	25.38	0.112	2.85	8.500	215.90	4.046	102.76	3.422	86.93	53.27	236.96	11.96	2.09	**C0999-112-8500-S**	4.551	115.59	41.07	182.68	10.40	1.82
C0999-112-9000-M	0.999	25.38	0.112	2.85	9.000	228.60	4.276	108.62	3.615	91.82	53.27	236.96	11.28	1.97	**C0999-112-9000-S**	4.812	122.23	41.07	182.68	9.81	1.72
C0999-112-9500-M	0.999	25.38	0.112	2.85	9.500	241.30	4.507	114.49	3.808	96.71	53.27	236.96	10.67	1.87	**C0999-112-9500-S**	5.074	128.87	41.07	182.68	9.28	1.62
C0999-125-1500-M	0.999	25.38	0.125	3.18	1.500	38.10	0.901	22.89	0.835	21.22	72.09	320.66	120.41	21.07	**C0999-125-1500-S**	0.974	24.75	55.05	244.87	104.71	18.32
C0999-125-1625-M	0.999	25.38	0.125	3.18	1.625	41.28	0.966	24.55	0.893	22.68	72.09	320.66	109.47	19.16	**C0999-125-1625-S**	1.047	26.59	55.05	244.87	95.19	16.66
C0999-125-1750-M	0.999	25.38	0.125	3.18	1.750	44.45	1.032	26.20	0.950	24.13	72.09	320.66	100.35	17.56	**C0999-125-1750-S**	1.119	28.43	55.05	244.87	87.26	15.27
C0999-125-1875-M	0.999	25.38	0.125	3.18	1.875	47.63	1.097	27.86	1.007	25.59	72.09	320.66	92.63	16.21	**C0999-125-1875-S**	1.192	30.27	55.05	244.87	80.55	14.10
C0999-125-2000-M	0.999	25.38	0.125	3.18	2.000	50.80	1.162	29.51	1.065	27.04	72.09	320.66	86.01	15.05	**C0999-125-2000-S**	1.264	32.10	55.05	244.87	74.79	13.09

FOR INFORMATION ON ALTERNATIVE FINISHES, SEE PAGE 311

Part Numbers with an "*" are squared and not ground. **Part Numbers in bold** represent the newly expanded Associated Spring RAYMOND compression spring offering.

MUSIC WIRE

Catalog #	Outside Diameter (OD)		Wire Diameter (d)		Free Length (L) Approx		Load Length (L_1)		Solid Height (Sh) Approx		Load (P) at L_1		Spring Rate (R)	
	in	mm	in	mm	in	mm	in	mm	in	mm	lb	N	lb/in	N/mm
C0999-125-2125-M	**0.999**	**25.38**	**0.125**	**3.18**	**2.125**	**53.98**	**1.227**	**31.17**	**1.122**	**28.50**	**72.09**	**320.66**	**80.28**	**14.05**
C0999-125-2250-M	**0.999**	**25.38**	**0.125**	**3.18**	**2.250**	**57.15**	**1.292**	**32.82**	**1.179**	**29.95**	**72.09**	**320.66**	**75.26**	**13.17**
C0999-125-2375-M	**0.999**	**25.38**	**0.125**	**3.18**	**2.375**	**60.33**	**1.357**	**34.47**	**1.237**	**31.41**	**72.09**	**320.66**	**70.83**	**12.40**
C0999-125-2500-M	**0.999**	**25.38**	**0.125**	**3.18**	**2.500**	**63.50**	**1.422**	**36.13**	**1.294**	**32.86**	**72.09**	**320.66**	**66.90**	**11.71**
C0999-125-2625-M	**0.999**	**25.38**	**0.125**	**3.18**	**2.625**	**66.68**	**1.488**	**37.78**	**1.351**	**34.32**	**72.09**	**320.66**	**63.38**	**11.09**
C0999-125-2750-M	**0.999**	**25.38**	**0.125**	**3.18**	**2.750**	**69.85**	**1.553**	**39.44**	**1.408**	**35.77**	**72.09**	**320.66**	**60.21**	**10.54**
C0999-125-2875-M	**0.999**	**25.38**	**0.125**	**3.18**	**2.875**	**73.03**	**1.618**	**41.09**	**1.466**	**37.23**	**72.09**	**320.66**	**57.34**	**10.03**
C0999-125-3000-M	**0.999**	**25.38**	**0.125**	**3.18**	**3.000**	**76.20**	**1.683**	**42.75**	**1.523**	**38.69**	**72.09**	**320.66**	**54.73**	**9.58**
C0999-125-3250-M	**0.999**	**25.38**	**0.125**	**3.18**	**3.250**	**82.55**	**1.813**	**46.06**	**1.638**	**41.60**	**72.09**	**320.66**	**50.17**	**8.78**
C0999-125-3500-M	**0.999**	**25.38**	**0.125**	**3.18**	**3.500**	**88.90**	**1.943**	**49.36**	**1.752**	**44.51**	**72.09**	**320.66**	**46.31**	**8.10**
C0999-125-3750-M	**0.999**	**25.38**	**0.125**	**3.18**	**3.750**	**95.25**	**2.074**	**52.67**	**1.867**	**47.42**	**72.09**	**320.66**	**43.01**	**7.53**
C0999-125-4000-M	**0.999**	**25.38**	**0.125**	**3.18**	**4.000**	**101.60**	**2.204**	**55.98**	**1.981**	**50.33**	**72.09**	**320.66**	**40.14**	**7.02**
C0999-125-4250-M	**0.999**	**25.38**	**0.125**	**3.18**	**4.250**	**107.95**	**2.334**	**59.29**	**2.096**	**53.24**	**72.09**	**320.66**	**37.63**	**6.59**
C0999-125-4500-M	**0.999**	**25.38**	**0.125**	**3.18**	**4.500**	**114.30**	**2.465**	**62.60**	**2.211**	**56.15**	**72.09**	**320.66**	**35.42**	**6.20**
C0999-125-4750-M	**0.999**	**25.38**	**0.125**	**3.18**	**4.750**	**120.65**	**2.595**	**65.91**	**2.325**	**59.06**	**72.09**	**320.66**	**33.45**	**5.85**
C0999-125-5000-M	**0.999**	**25.38**	**0.125**	**3.18**	**5.000**	**127.00**	**2.725**	**69.22**	**2.440**	**61.97**	**72.09**	**320.66**	**31.69**	**5.55**
C0999-125-5250-M	**0.999**	**25.38**	**0.125**	**3.18**	**5.250**	**133.35**	**2.855**	**72.53**	**2.554**	**64.88**	**72.09**	**320.66**	**30.10**	**5.27**
C0999-125-5500-M	**0.999**	**25.38**	**0.125**	**3.18**	**5.500**	**139.70**	**2.986**	**75.83**	**2.669**	**67.79**	**72.09**	**320.66**	**28.67**	**5.02**
C0999-125-5750-M	**0.999**	**25.38**	**0.125**	**3.18**	**5.750**	**146.05**	**3.116**	**79.14**	**2.784**	**70.70**	**72.09**	**320.66**	**27.37**	**4.79**
C0999-125-6000-M	**0.999**	**25.38**	**0.125**	**3.18**	**6.000**	**152.40**	**3.246**	**82.45**	**2.898**	**73.61**	**72.09**	**320.66**	**26.18**	**4.58**
C0999-125-6250-M	**0.999**	**25.38**	**0.125**	**3.18**	**6.250**	**158.75**	**3.376**	**85.76**	**3.013**	**76.52**	**72.09**	**320.66**	**25.09**	**4.39**
C0999-125-6500-M	**0.999**	**25.38**	**0.125**	**3.18**	**6.500**	**165.10**	**3.507**	**89.07**	**3.127**	**79.44**	**72.09**	**320.66**	**24.08**	**4.21**
C0999-125-6750-M	**0.999**	**25.38**	**0.125**	**3.18**	**6.750**	**171.45**	**3.637**	**92.38**	**3.242**	**82.35**	**72.09**	**320.66**	**23.16**	**4.05**
C0999-125-7000-M	**0.999**	**25.38**	**0.125**	**3.18**	**7.000**	**177.80**	**3.767**	**95.69**	**3.357**	**85.26**	**72.09**	**320.66**	**22.30**	**3.90**
C0999-125-7500-M	**0.999**	**25.38**	**0.125**	**3.18**	**7.500**	**190.50**	**4.028**	**102.30**	**3.586**	**91.08**	**72.09**	**320.66**	**20.76**	**3.63**
C0999-125-8000-M	**0.999**	**25.38**	**0.125**	**3.18**	**8.000**	**203.20**	**4.288**	**108.92**	**3.815**	**96.90**	**72.09**	**320.66**	**19.42**	**3.40**
C0999-125-8500-M	**0.999**	**25.38**	**0.125**	**3.18**	**8.500**	**215.90**	**4.549**	**115.54**	**4.044**	**102.72**	**72.09**	**320.66**	**18.25**	**3.19**
C0999-125-9000-M	**0.999**	**25.38**	**0.125**	**3.18**	**9.000**	**228.60**	**4.809**	**122.16**	**4.273**	**108.54**	**72.09**	**320.66**	**17.20**	**3.01**
C0999-125-9500-M	**0.999**	**25.38**	**0.125**	**3.18**	**9.500**	**241.30**	**5.070**	**128.78**	**4.503**	**114.36**	**72.09**	**320.66**	**16.27**	**2.85**
C0999-135-1500-M	0.999	25.38	0.135	3.43	1.500	38.10	0.965	24.51	0.914	23.22	89.03	396.04	166.41	29.12
C0999-135-1625-M	0.999	25.38	0.135	3.43	1.625	41.28	1.036	26.30	0.978	24.85	89.03	396.04	151.06	26.44
C0999-135-1750-M	0.999	25.38	0.135	3.43	1.750	44.45	1.106	28.10	1.042	26.47	89.03	396.04	138.30	24.20
C0999-135-1875-M	0.999	25.38	0.135	3.43	1.875	47.63	1.177	29.89	1.106	28.10	89.03	396.04	127.53	22.32
C0999-135-2000-M	0.999	25.38	0.135	3.43	2.000	50.80	1.247	31.69	1.170	29.73	89.03	396.04	118.31	20.70
C0999-135-2125-M	0.999	25.38	0.135	3.43	2.125	53.98	1.318	33.48	1.235	31.36	89.03	396.04	110.34	19.31
C0999-135-2250-M	0.999	25.38	0.135	3.43	2.250	57.15	1.389	35.27	1.299	32.98	89.03	396.04	103.38	18.09
C0999-135-2375-M	0.999	25.38	0.135	3.43	2.375	60.33	1.459	37.07	1.363	34.61	89.03	396.04	97.24	17.02
C0999-135-2500-M	0.999	25.38	0.135	3.43	2.500	63.50	1.530	38.86	1.427	36.24	89.03	396.04	91.79	16.06
C0999-135-2625-M	0.999	25.38	0.135	3.43	2.625	66.68	1.601	40.66	1.491	37.87	89.03	396.04	86.91	15.21
C0999-135-2750-M	0.999	25.38	0.135	3.43	2.750	69.85	1.671	42.45	1.555	39.50	89.03	396.04	82.53	14.44
C0999-135-2875-M	0.999	25.38	0.135	3.43	2.875	73.03	1.742	44.24	1.619	41.12	89.03	396.04	78.57	13.75
C0999-135-3000-M	0.999	25.38	0.135	3.43	3.000	76.20	1.813	46.04	1.683	42.75	89.03	396.04	74.98	13.12
C0999-135-3250-M	0.999	25.38	0.135	3.43	3.250	82.55	1.954	49.63	1.811	46.01	89.03	396.04	68.69	12.02
C0999-135-3500-M	0.999	25.38	0.135	3.43	3.500	88.90	2.095	53.21	1.939	49.26	89.03	396.04	63.37	11.09
C0999-135-3750-M	0.999	25.38	0.135	3.43	3.750	95.25	2.236	56.80	2.068	52.52	89.03	396.04	58.82	10.29
C0999-135-4000-M	0.999	25.38	0.135	3.43	4.000	101.60	2.378	60.39	2.196	55.77	89.03	396.04	54.88	9.60
C0999-135-4250-M	0.999	25.38	0.135	3.43	4.250	107.95	2.519	63.98	2.324	59.03	89.03	396.04	51.43	9.00
C0999-135-4500-M	0.999	25.38	0.135	3.43	4.500	114.30	2.660	67.57	2.452	62.28	89.03	396.04	48.39	8.47
C0999-135-4750-M	0.999	25.38	0.135	3.43	4.750	120.65	2.801	71.15	2.580	65.54	89.03	396.04	45.69	8.00
C0999-135-5000-M	0.999	25.38	0.135	3.43	5.000	127.00	2.943	74.74	2.708	68.79	89.03	396.04	43.27	7.57
C0999-135-5250-M	0.999	25.38	0.135	3.43	5.250	133.35	3.084	78.33	2.837	72.05	89.03	396.04	41.10	7.19
C0999-135-5500-M	0.999	25.38	0.135	3.43	5.500	139.70	3.225	81.92	2.965	75.31	89.03	396.04	39.14	6.85
C0999-135-5750-M	0.999	25.38	0.135	3.43	5.750	146.05	3.366	85.50	3.093	78.56	89.03	396.04	37.35	6.54
C0999-135-6000-M	0.999	25.38	0.135	3.43	6.000	152.40	3.508	89.09	3.221	81.82	89.03	396.04	35.72	6.25
C0999-135-6250-M	0.999	25.38	0.135	3.43	6.250	158.75	3.649	92.68	3.349	85.07	89.03	396.04	34.23	5.99
C0999-135-6500-M	0.999	25.38	0.135	3.43	6.500	165.10	3.790	96.27	3.477	88.33	89.03	396.04	32.85	5.75
C0999-135-6750-M	0.999	25.38	0.135	3.43	6.750	171.45	3.931	99.86	3.606	91.58	89.03	396.04	31.59	5.53
C0999-135-7000-M	0.999	25.38	0.135	3.43	7.000	177.80	4.073	103.44	3.734	94.84	89.03	396.04	30.41	5.32
C0999-135-7500-M	0.999	25.38	0.135	3.43	7.500	190.50	4.355	110.62	3.990	101.35	89.03	396.04	28.31	4.95
C0999-135-8000-M	0.999	25.38	0.135	3.43	8.000	203.20	4.638	117.80	4.246	107.86	89.03	396.04	26.48	4.63
C0999-135-8500-M	0.999	25.38	0.135	3.43	8.500	215.90	4.920	124.97	4.503	114.37	89.03	396.04	24.87	4.35
C0999-135-9000-M	0.999	25.38	0.135	3.43	9.000	228.60	5.203	132.15	4.759	120.88	89.03	396.04	23.45	4.10
C0999-135-9500-M	0.999	25.38	0.135	3.43	9.500	241.30	5.485	139.32	5.015	127.39	89.03	396.04	22.18	3.88
C0999-148-1375-M	0.999	25.38	0.148	3.76	1.375	34.93	0.964	24.48	0.936	23.77	114.44	509.07	278.28	48.70

STAINLESS STEEL

Catalog #	Load Length (L_1)		Load (P) at L_1		Spring Rate (R)	
	in	mm	lb	N	lb/in	N/mm
C0999-125-2125-S	**1.336**	**33.94**	**55.05**	**244.87**	**69.81**	**12.22**
C0999-125-2250-S	**1.409**	**35.78**	**55.05**	**244.87**	**65.44**	**11.45**
C0999-125-2375-S	**1.481**	**37.62**	**55.05**	**244.87**	**61.59**	**10.78**
C0999-125-2500-S	**1.554**	**39.46**	**55.05**	**244.87**	**58.17**	**10.18**
C0999-125-2625-S	**1.626**	**41.30**	**55.05**	**244.87**	**55.11**	**9.64**
C0999-125-2750-S	**1.699**	**43.14**	**55.05**	**244.87**	**52.35**	**9.16**
C0999-125-2875-S	**1.771**	**44.98**	**55.05**	**244.87**	**49.86**	**8.73**
C0999-125-3000-S	**1.843**	**46.82**	**55.05**	**244.87**	**47.60**	**8.33**
C0999-125-3250-S	**1.988**	**50.50**	**55.05**	**244.87**	**43.63**	**7.63**
C0999-125-3500-S	**2.133**	**54.18**	**55.05**	**244.87**	**40.27**	**7.05**
C0999-125-3750-S	**2.278**	**57.86**	**55.05**	**244.87**	**37.40**	**6.54**
C0999-125-4000-S	**2.423**	**61.54**	**55.05**	**244.87**	**34.90**	**6.11**
C0999-125-4250-S	**2.568**	**65.22**	**55.05**	**244.87**	**32.72**	**5.73**
C0999-125-4500-S	**2.712**	**68.90**	**55.05**	**244.87**	**30.80**	**5.39**
C0999-125-4750-S	**2.857**	**72.58**	**55.05**	**244.87**	**29.09**	**5.09**
C0999-125-5000-S	**3.002**	**76.26**	**55.05**	**244.87**	**27.56**	**4.82**
C0999-125-5250-S	**3.147**	**79.93**	**55.05**	**244.87**	**26.18**	**4.58**
C0999-125-5500-S	**3.292**	**83.61**	**55.05**	**244.87**	**24.93**	**4.36**
C0999-125-5750-S	**3.437**	**87.29**	**55.05**	**244.87**	**23.80**	**4.16**
C0999-125-6000-S	**3.582**	**90.97**	**55.05**	**244.87**	**22.76**	**3.98**
C0999-125-6250-S	**3.726**	**94.65**	**55.05**	**244.87**	**21.81**	**3.82**
C0999-125-6500-S	**3.871**	**98.33**	**55.05**	**244.87**	**20.94**	**3.66**
C0999-125-6750-S	**4.016**	**102.01**	**55.05**	**244.87**	**20.14**	**3.52**
C0999-125-7000-S	**4.161**	**105.69**	**55.05**	**244.87**	**19.39**	**3.39**
C0999-125-7500-S	**4.451**	**113.05**	**55.05**	**244.87**	**18.05**	**3.16**
C0999-125-8000-S	**4.740**	**120.41**	**55.05**	**244.87**	**16.89**	**2.96**
C0999-125-8500-S	**5.030**	**127.77**	**55.05**	**244.87**	**15.87**	**2.78**
C0999-125-9000-S	**5.320**	**135.12**	**55.05**	**244.87**	**14.96**	**2.62**
C0999-125-9500-S	**5.610**	**142.48**	**55.05**	**244.87**	**14.15**	**2.48**
C0999-135-1500-S	1.034	26.25	67.48	300.17	144.70	25.32
C0999-135-1625-S	1.111	28.23	67.48	300.17	131.36	22.99
C0999-135-1750-S	1.189	30.20	67.48	300.17	120.26	21.05
C0999-135-1875-S	1.266	32.17	67.48	300.17	110.89	19.41
C0999-135-2000-S	1.344	34.14	67.48	300.17	102.88	18.00
C0999-135-2125-S	1.422	36.11	67.48	300.17	95.95	16.79
C0999-135-2250-S	1.499	38.08	67.48	300.17	89.89	15.73
C0999-135-2375-S	1.577	40.05	67.48	300.17	84.55	14.80
C0999-135-2500-S	1.655	42.02	67.48	300.17	79.81	13.97
C0999-135-2625-S	1.732	44.00	67.48	300.17	75.58	13.23
C0999-135-2750-S	1.810	45.97	67.48	300.17	71.77	12.56
C0999-135-2875-S	1.887	47.94	67.48	300.17	68.33	11.96
C0999-135-3000-S	1.965	49.91	67.48	300.17	65.20	11.41
C0999-135-3250-S	2.120	53.85	67.48	300.17	59.73	10.45
C0999-135-3500-S	2.275	57.79	67.48	300.17	55.10	9.64
C0999-135-3750-S	2.431	61.74	67.48	300.17	51.15	8.95
C0999-135-4000-S	2.586	65.68	67.48	300.17	47.72	8.35
C0999-135-4250-S	2.741	69.62	67.48	300.17	44.72	7.83
C0999-135-4500-S	2.896	73.56	67.48	300.17	42.08	7.36
C0999-135-4750-S	3.051	77.51	67.48	300.17	39.73	6.95
C0999-135-5000-S	3.207	81.45	67.48	300.17	37.63	6.59
C0999-135-5250-S	3.362	85.39	67.48	300.17	35.74	6.25
C0999-135-5500-S	3.517	89.33	67.48	300.17	34.03	5.96
C0999-135-5750-S	3.672	93.28	67.48	300.17	32.48	5.68
C0999-135-6000-S	3.828	97.22	67.48	300.17	31.06	5.44
C0999-135-6250-S	3.983	101.16	67.48	300.17	29.76	5.21
C0999-135-6500-S	4.138	105.10	67.48	300.17	28.57	5.00
C0999-135-6750-S	4.293	109.05	67.48	300.17	27.47	4.81
C0999-135-7000-S	4.448	112.99	67.48	300.17	26.45	4.63
C0999-135-7500-S	4.759	120.87	67.48	300.17	24.62	4.31
C0999-135-8000-S	5.069	128.76	67.48	300.17	23.03	4.03
C0999-135-8500-S	5.380	136.64	67.48	300.17	21.63	3.78
C0999-135-9000-S	5.690	144.53	67.48	300.17	20.39	3.57
C0999-135-9500-S	6.001	152.41	67.48	300.17	19.28	3.37
C0999-148-1375-S	1.020	25.91	85.89	382.05	241.98	42.35

Part Numbers with an "*" are squared and not ground. **Part Numbers in bold** represent the newly expanded Associated Spring RAYMOND compression spring offering.

MUSIC WIRE															STAINLESS STEEL						
Catalog #	Outside Diameter (OD)		Wire Diameter (d)		Free Length (L) Approx		Load Length (L_1)		Solid Height (Sh) Approx		Load (P) at L_1		Spring Rate (R)		Catalog #	Load Length (L_1)		Load (P) at L_1		Spring Rate (R)	
	in	mm	in	mm	in	mm	in	mm	in	mm	lb	N	lb/in	N/mm		in	mm	lb	N	lb/in	N/mm
C0999-148-1500-M	0.999	25.38	0.148	3.76	1.500	38.10	1.041	26.44	1.008	25.61	114.44	509.07	249.39	43.64	**C0999-148-1500-S**	1.104	28.04	85.89	382.05	216.86	37.95
C0999-148-1625-M	0.999	25.38	0.148	3.76	1.625	41.28	1.118	28.41	1.081	27.45	114.44	509.07	225.93	39.54	**C0999-148-1625-S**	1.188	30.17	85.89	382.05	196.46	34.38
C0999-148-1750-M	0.999	25.38	0.148	3.76	1.750	44.45	1.196	30.37	1.153	29.28	114.44	509.07	206.51	36.14	**C0999-148-1750-S**	1.272	32.30	85.89	382.05	179.57	31.43
C0999-148-1875-M	0.999	25.38	0.148	3.76	1.875	47.63	1.273	32.34	1.225	31.12	114.44	509.07	190.16	33.28	**C0999-148-1875-S**	1.356	34.43	85.89	382.05	165.36	28.94
C0999-148-2000-M	0.999	25.38	0.148	3.76	2.000	50.80	1.351	34.30	1.298	32.96	114.44	509.07	176.21	30.84	**C0999-148-2000-S**	1.439	36.56	85.89	382.05	153.23	26.81
C0999-148-2125-M	0.999	25.38	0.148	3.76	2.125	53.98	1.428	36.27	1.370	34.80	114.44	509.07	164.17	28.73	**C0999-148-2125-S**	1.523	38.69	85.89	382.05	142.76	24.98
C0999-148-2250-M	0.999	25.38	0.148	3.76	2.250	57.15	1.505	38.23	1.443	36.64	114.44	509.07	153.67	26.89	**C0999-148-2250-S**	1.607	40.82	85.89	382.05	133.62	23.38
C0999-148-2375-M	0.999	25.38	0.148	3.76	2.375	60.33	1.583	40.20	1.515	38.48	114.44	509.07	144.43	25.27	**C0999-148-2375-S**	1.691	42.95	85.89	382.05	125.59	21.98
C0999-148-2500-M	0.999	25.38	0.148	3.76	2.500	63.50	1.660	42.16	1.587	40.32	114.44	509.07	136.24	23.84	**C0999-148-2500-S**	1.775	45.08	85.89	382.05	118.47	20.73
C0999-148-2625-M	0.999	25.38	0.148	3.76	2.625	66.68	1.737	44.13	1.660	42.16	114.44	509.07	128.92	22.56	**C0999-148-2625-S**	1.859	47.22	85.89	382.05	112.11	19.62
C0999-148-2750-M	0.999	25.38	0.148	3.76	2.750	69.85	1.815	46.09	1.732	44.00	114.44	509.07	122.36	21.41	**C0999-148-2750-S**	1.943	49.35	85.89	382.05	106.40	18.62
C0999-148-2875-M	0.999	25.38	0.148	3.76	2.875	73.03	1.892	48.06	1.805	45.83	114.44	509.07	116.43	20.37	**C0999-148-2875-S**	2.027	51.48	85.89	382.05	101.24	17.72
C0999-148-3000-M	0.999	25.38	0.148	3.76	3.000	76.20	1.969	50.02	1.877	47.67	114.44	509.07	111.04	19.43	**C0999-148-3000-S**	2.111	53.61	85.89	382.05	96.56	16.90
C0999-148-3250-M	0.999	25.38	0.148	3.76	3.250	82.55	2.124	53.95	2.022	51.35	114.44	509.07	101.65	17.79	**C0999-148-3250-S**	2.278	57.87	85.89	382.05	88.39	15.47
C0999-148-3500-M	0.999	25.38	0.148	3.76	3.500	88.90	2.279	57.88	2.166	55.03	114.44	509.07	93.72	16.40	**C0999-148-3500-S**	2.446	62.13	85.89	382.05	81.49	14.26
C0999-148-3750-M	0.999	25.38	0.148	3.76	3.750	95.25	2.434	61.81	2.311	58.71	114.44	509.07	86.93	15.21	**C0999-148-3750-S**	2.614	66.39	85.89	382.05	75.59	13.23
C0999-148-4000-M	0.999	25.38	0.148	3.76	4.000	101.60	2.588	65.74	2.456	62.38	114.44	509.07	81.07	14.19	**C0999-148-4000-S**	2.782	70.65	85.89	382.05	70.49	12.34
C0999-148-4250-M	0.999	25.38	0.148	3.76	4.250	107.95	2.743	69.67	2.601	66.06	114.44	509.07	75.94	13.29	**C0999-148-4250-S**	2.949	74.91	85.89	382.05	66.03	11.56
C0999-148-4500-M	0.999	25.38	0.148	3.76	4.500	114.30	2.898	73.60	2.746	69.74	114.44	509.07	71.42	12.50	**C0999-148-4500-S**	3.117	79.17	85.89	382.05	62.11	10.87
C0999-148-4750-M	0.999	25.38	0.148	3.76	4.750	120.65	3.052	77.53	2.890	73.42	114.44	509.07	67.42	11.80	**C0999-148-4750-S**	3.285	83.44	85.89	382.05	58.62	10.26
C0999-148-5000-M	0.999	25.38	0.148	3.76	5.000	127.00	3.207	81.46	3.035	77.10	114.44	509.07	63.83	11.17	**C0999-148-5000-S**	3.453	87.70	85.89	382.05	55.51	9.71
C0999-148-5250-M	0.999	25.38	0.148	3.76	5.250	133.35	3.362	85.39	3.180	80.77	114.44	509.07	60.61	10.61	**C0999-148-5250-S**	3.620	91.96	85.89	382.05	52.71	9.22
C0999-148-5500-M	0.999	25.38	0.148	3.76	5.500	139.70	3.517	89.32	3.325	84.45	114.44	509.07	57.70	10.10	**C0999-148-5500-S**	3.788	96.22	85.89	382.05	50.17	8.78
C0999-148-5750-M	0.999	25.38	0.148	3.76	5.750	146.05	3.671	93.25	3.470	88.13	114.44	509.07	55.05	9.63	**C0999-148-5750-S**	3.956	100.48	85.89	382.05	47.87	8.38
C0999-148-6000-M	0.999	25.38	0.148	3.76	6.000	152.40	3.826	97.18	3.614	91.81	114.44	509.07	52.64	9.21	**C0999-148-6000-S**	4.124	104.74	85.89	382.05	45.78	8.01
C0999-148-6250-M	0.999	25.38	0.148	3.76	6.250	158.75	3.981	101.11	3.759	95.48	114.44	509.07	50.43	8.83	**C0999-148-6250-S**	4.291	109.00	85.89	382.05	43.85	7.67
C0999-148-6500-M	0.999	25.38	0.148	3.76	6.500	165.10	4.135	105.04	3.904	99.16	114.44	509.07	48.40	8.47	**C0999-148-6500-S**	4.459	113.26	85.89	382.05	42.09	7.37
C0999-148-6750-M	0.999	25.38	0.148	3.76	6.750	171.45	4.290	108.97	4.049	102.84	114.44	509.07	46.52	8.14	**C0999-148-6750-S**	4.627	117.53	85.89	382.05	40.46	7.08
C0999-148-7000-M	0.999	25.38	0.148	3.76	7.000	177.80	4.445	112.90	4.194	106.52	114.44	509.07	44.79	7.84	**C0999-148-7000-S**	4.795	121.79	85.89	382.05	38.95	6.82
C0999-148-7500-M	0.999	25.38	0.148	3.76	7.500	190.50	4.754	120.76	4.483	113.87	114.44	509.07	41.68	7.29	**C0999-148-7500-S**	5.130	130.31	85.89	382.05	36.24	6.34
C0999-148-8000-M	0.999	25.38	0.148	3.76	8.000	203.20	5.064	128.62	4.773	121.23	114.44	509.07	38.98	6.82	**C0999-148-8000-S**	5.466	138.83	85.89	382.05	33.89	5.93
C0999-148-8500-M	0.999	25.38	0.148	3.76	8.500	215.90	5.373	136.48	5.062	128.58	114.44	509.07	36.60	6.41	**C0999-148-8500-S**	5.801	147.35	85.89	382.05	31.83	5.57
C0999-148-9000-M	0.999	25.38	0.148	3.76	9.000	228.60	5.683	144.34	5.352	135.94	114.44	509.07	34.50	6.04	**C0999-148-9000-S**	6.137	155.88	85.89	382.05	30.00	5.25
C0999-148-9500-M	0.999	25.38	0.148	3.76	9.500	241.30	5.992	152.20	5.642	143.30	114.44	509.07	32.62	5.71	**C0999-148-9500-S**	6.472	164.40	85.89	382.05	28.37	4.96
C0999-162-1500-M	0.999	25.38	0.162	4.12	1.500	38.10	1.114	28.30	1.098	27.89	146.27	650.64	378.92	66.31	**C0999-162-1500-S**	1.170	29.73	108.60	483.08	329.50	57.66
C0999-162-1625-M	0.999	25.38	0.162	4.12	1.625	41.28	1.198	30.43	1.179	29.94	146.27	650.64	342.52	59.94	**C0999-162-1625-S**	1.260	32.01	108.60	483.08	297.84	52.12
C0999-162-1750-M	0.999	25.38	0.162	4.12	1.750	44.45	1.282	32.56	1.259	31.99	146.27	650.64	312.49	54.69	**C0999-162-1750-S**	1.350	34.30	108.60	483.08	271.73	47.55
C0999-162-1875-M	0.999	25.38	0.162	4.12	1.875	47.63	1.366	34.69	1.340	34.03	146.27	650.64	287.31	50.28	**C0999-162-1875-S**	1.440	36.58	108.60	483.08	249.83	43.72
C0999-162-2000-M	0.999	25.38	0.162	4.12	2.000	50.80	1.450	36.83	1.420	36.08	146.27	650.64	265.88	46.53	**C0999-162-2000-S**	1.530	38.87	108.60	483.08	231.20	40.46
C0999-162-2125-M	0.999	25.38	0.162	4.12	2.125	53.98	1.534	38.96	1.501	38.12	146.27	650.64	247.43	43.30	**C0999-162-2125-S**	1.620	41.15	108.60	483.08	215.15	37.65
C0999-162-2250-M	0.999	25.38	0.162	4.12	2.250	57.15	1.618	41.09	1.582	40.17	146.27	650.64	231.37	40.49	**C0999-162-2250-S**	1.710	43.44	108.60	483.08	201.19	35.21
C0999-162-2375-M	0.999	25.38	0.162	4.12	2.375	60.33	1.702	43.22	1.662	42.22	146.27	650.64	217.27	38.02	**C0999-162-2375-S**	1.800	45.72	108.60	483.08	188.93	33.06
C0999-162-2500-M	0.999	25.38	0.162	4.12	2.500	63.50	1.786	45.36	1.743	44.26	146.27	650.64	204.79	35.84	**C0999-162-2500-S**	1.890	48.01	108.60	483.08	178.08	31.16
C0999-162-2625-M	0.999	25.38	0.162	4.12	2.625	66.68	1.870	47.49	1.823	46.31	146.27	650.64	193.66	33.89	**C0999-162-2625-S**	1.980	50.29	108.60	483.08	168.40	29.47
C0999-162-2750-M	0.999	25.38	0.162	4.12	2.750	69.85	1.954	49.62	1.904	48.36	146.27	650.64	183.68	32.14	**C0999-162-2750-S**	2.070	52.58	108.60	483.08	159.72	27.95
C0999-162-2875-M	0.999	25.38	0.162	4.12	2.875	73.03	2.038	51.76	1.984	50.40	146.27	650.64	174.68	30.57	**C0999-162-2875-S**	2.160	54.86	108.60	483.08	151.90	26.58
C0999-162-3000-M	0.999	25.38	0.162	4.12	3.000	76.20	2.122	53.89	2.065	52.45	146.27	650.64	166.52	29.14	**C0999-162-3000-S**	2.250	57.15	108.60	483.08	144.80	25.34
C0999-162-3250-M	0.999	25.38	0.162	4.12	3.250	82.55	2.290	58.15	2.226	56.54	146.27	650.64	152.30	26.65	**C0999-162-3250-S**	2.430	61.72	108.60	483.08	132.43	23.18
C0999-162-3500-M	0.999	25.38	0.162	4.12	3.500	88.90	2.457	62.42	2.387	60.63	146.27	650.64	140.31	24.55	**C0999-162-3500-S**	2.610	66.29	108.60	483.08	122.01	21.35
C0999-162-3750-M	0.999	25.38	0.162	4.12	3.750	95.25	2.625	66.69	2.548	64.73	146.27	650.64	130.07	22.76	**C0999-162-3750-S**	2.790	70.86	108.60	483.08	113.10	19.79
C0999-162-4000-M	0.999	25.38	0.162	4.12	4.000	101.60	2.793	70.95	2.709	68.82	146.27	650.64	121.22	21.21	**C0999-162-4000-S**	2.970	75.43	108.60	483.08	105.41	18.45
C0999-162-4250-M	0.999	25.38	0.162	4.12	4.250	107.95	2.961	75.22	2.871	72.91	146.27	650.64	113.50	19.86	**C0999-162-4250-S**	3.150	80.00	108.60	483.08	98.70	17.27
C0999-162-4500-M	0.999	25.38	0.162	4.12	4.500	114.30	3.129	79.48	3.032	77.01	146.27	650.64	106.71	18.67	**C0999-162-4500-S**	3.330	84.57	108.60	483.08	92.79	16.24
C0999-162-4750-M	0.999	25.38	0.162	4.12	4.750	120.65	3.297	83.75	3.193	81.10	146.27	650.64	100.68	17.62	**C0999-162-4750-S**	3.510	89.14	108.60	483.08	87.55	15.32
C0999-162-5000-M	0.999	25.38	0.162	4.12	5.000	127.00	3.465	88.01	3.354	85.19	146.27	650.64	95.30	16.68	**C0999-162-5000-S**	3.689	93.71	108.60	483.08	82.87	14.50
C0999-162-5250-M	0.999	25.38	0.162	4.12	5.250	133.35	3.633	92.28	3.515	89.28	146.27	650.64	90.46	15.83	**C0999-162-5250-S**	3.869	98.28	108.60	483.08	78.66	13.77
C0999-162-5500-M	0.999	25.38	0.162	4.12	5.500	139.70	3.801	96.55	3.676	93.38	146.27	650.64	86.09	15.07	**C0999-162-5500-S**	4.049	102.85	108.60	483.08	74.86	13.10
C0999-162-5750-M	0.999	25.38	0.162	4.12	5.750	146.05	3.969	100.81	3.837	97.47	146.27	650.64	82.13	14.37	**C0999-162-5750-S**	4.229	107.42	108.60	483.08	71.41	12.50
C0999-162-6000-M	0.999	25.38	0.162	4.12	6.000	152.40	4.137	105.08	3.998	101.56	146.27	650.64	78.51	13.74	**C0999-162-6000-S**	4.409	111.99	108.60	483.08	68.27	11.95
C0999-162-6250-M	0.999	25.38	0.162	4.12	6.250	158.75	4.305	109.34	4.160	105.65	146.27	650.64	75.20	13.16	**C0999-162-6250-S**	4.589	116.56	108.60	483.08	65.39	11.44
C0999-162-6500-M	0.999	25.38	0.162	4.12	6.500	165.10	4.473	113.61	4.321	109.75	146.27	650.64	72.15	12.63	**C0999-162-6500-S**	4.769	121.13	108.60	483.08	62.74	10.98
C0999-162-6750-M	0.999	25.38	0.162	4.12	6.750	171.45	4.641	117.87	4.482	113.84	146.27	650.64	69.35	12.14	**C0999-162-6750-S**	4.949	125.70	108.60	483.08	60.30	10.55
C0999-162-7000-M	0.999	25.38	0.162	4.12	7.000	177.80	4.809	122.14	4.643	117.93	146.27	650.64	66.75	11.68	**C0999-162-7000-S**	5.129	130.27	108.60	483.08	58.04	10.16
C0999-162-7500-M	0.999	25.38	0.162	4.12	7.500	190.50	5.145	130.67	4.965	126.12	146.27	650.64	62.10	10.87	**C0999-162-7500-S**	5.489	139.42	108.60	483.08	54.00	9.45

FOR INFORMATION ON ALTERNATIVE FINISHES, SEE PAGE 311

Part Numbers with an "*" are squared and not ground. **Part Numbers in bold** represent the newly expanded Associated Spring RAYMOND compression spring offering.

MUSIC WIRE															STAINLESS STEEL						
Catalog #	Outside Diameter (OD)		Wire Diameter (d)		Free Length (L) Approx		Load Length (L_1)		Solid Height (Sh) Approx		Load (P) at L_1		Spring Rate (R)		Catalog #	Load Length (L_1)		Load (P) at L_1		Spring Rate (R)	
	in	mm	in	mm	in	mm	in	mm	in	mm	lb	N	lb/in	N/mm		in	mm	lb	N	lb/in	N/mm
C0999-162-8000-M	**0.999**	**25.38**	**0.162**	**4.12**	**8.000**	**203.20**	**5.480**	**139.20**	**5.288**	**134.30**	**146.27**	**650.64**	**58.05**	**10.16**	**C0999-162-8000-S**	**5.849**	**148.56**	**108.60**	**483.08**	**50.48**	**8.83**
C0999-162-8500-M	**0.999**	**25.38**	**0.162**	**4.12**	**8.500**	**215.90**	**5.816**	**147.73**	**5.610**	**142.49**	**146.27**	**650.64**	**54.50**	**9.54**	**C0999-162-8500-S**	**6.209**	**157.70**	**108.60**	**483.08**	**47.39**	**8.29**
C0999-162-9000-M	**0.999**	**25.38**	**0.162**	**4.12**	**9.000**	**228.60**	**6.152**	**156.26**	**5.932**	**150.67**	**146.27**	**650.64**	**51.36**	**8.99**	**C0999-162-9000-S**	**6.568**	**166.84**	**108.60**	**483.08**	**44.66**	**7.82**
C0999-162-9500-M	**0.999**	**25.38**	**0.162**	**4.12**	**9.500**	**241.30**	**6.488**	**164.80**	**6.254**	**158.86**	**146.27**	**650.64**	**48.56**	**8.50**	**C0999-162-9500-S**	**6.928**	**175.98**	**108.60**	**483.08**	**42.23**	**7.39**
C0999-177-1500-M	**0.999**	**25.38**	**0.177**	**4.50**	**1.500**	**38.10**	**1.229**	**31.22**	**1.182**	**30.01**	**157.82**	**702.03**	**582.99**	**102.02**	**C0999-177-1500-S**	**1.231**	**31.27**	**136.30**	**606.28**	**506.95**	**88.72**
C0999-177-1625-M	**0.999**	**25.38**	**0.177**	**4.50**	**1.625**	**41.28**	**1.272**	**32.30**	**1.270**	**32.25**	**185.70**	**826.05**	**525.66**	**91.99**	**C0999-177-1625-S**	**1.327**	**33.70**	**136.30**	**606.28**	**457.09**	**79.99**
C0999-177-1750-M	**0.999**	**25.38**	**0.177**	**4.50**	**1.750**	**44.45**	**1.362**	**34.59**	**1.358**	**34.50**	**185.70**	**826.05**	**478.59**	**83.75**	**C0999-177-1750-S**	**1.422**	**36.13**	**136.30**	**606.28**	**416.16**	**72.83**
C0999-177-1875-M	**0.999**	**25.38**	**0.177**	**4.50**	**1.875**	**47.63**	**1.452**	**36.89**	**1.447**	**36.74**	**185.70**	**826.05**	**439.26**	**76.87**	**C0999-177-1875-S**	**1.518**	**38.56**	**136.30**	**606.28**	**381.96**	**66.84**
C0999-177-2000-M	**0.999**	**25.38**	**0.177**	**4.50**	**2.000**	**50.80**	**1.542**	**39.18**	**1.535**	**38.98**	**185.70**	**826.05**	**405.90**	**71.03**	**C0999-177-2000-S**	**1.614**	**40.99**	**136.30**	**606.28**	**352.95**	**61.77**
C0999-177-2125-M	**0.999**	**25.38**	**0.177**	**4.50**	**2.125**	**53.98**	**1.633**	**41.47**	**1.623**	**41.23**	**185.70**	**826.05**	**377.25**	**66.02**	**C0999-177-2125-S**	**1.710**	**43.42**	**136.30**	**606.28**	**328.04**	**57.41**
C0999-177-2250-M	**0.999**	**25.38**	**0.177**	**4.50**	**2.250**	**57.15**	**1.723**	**43.76**	**1.712**	**43.47**	**185.70**	**826.05**	**352.38**	**61.67**	**C0999-177-2250-S**	**1.805**	**45.85**	**136.30**	**606.28**	**306.42**	**53.62**
C0999-177-2375-M	**0.999**	**25.38**	**0.177**	**4.50**	**2.375**	**60.33**	**1.813**	**46.06**	**1.800**	**45.72**	**185.70**	**826.05**	**330.58**	**57.85**	**C0999-177-2375-S**	**1.901**	**48.28**	**136.30**	**606.28**	**287.46**	**50.31**
C0999-177-2500-M	**0.999**	**25.38**	**0.177**	**4.50**	**2.500**	**63.50**	**1.904**	**48.35**	**1.888**	**47.96**	**185.70**	**826.05**	**311.33**	**54.48**	**C0999-177-2500-S**	**1.997**	**50.71**	**136.30**	**606.28**	**270.72**	**47.38**
C0999-177-2625-M	**0.999**	**25.38**	**0.177**	**4.50**	**2.625**	**66.68**	**1.994**	**50.64**	**1.976**	**50.20**	**185.70**	**826.05**	**294.19**	**51.48**	**C0999-177-2625-S**	**2.092**	**53.14**	**136.30**	**606.28**	**255.82**	**44.77**
C0999-177-2750-M	**0.999**	**25.38**	**0.177**	**4.50**	**2.750**	**69.85**	**2.084**	**52.93**	**2.065**	**52.45**	**185.70**	**826.05**	**278.84**	**48.80**	**C0999-177-2750-S**	**2.188**	**55.57**	**136.30**	**606.28**	**242.47**	**42.43**
C0999-177-2875-M	**0.999**	**25.38**	**0.177**	**4.50**	**2.875**	**73.03**	**2.174**	**55.23**	**2.153**	**54.69**	**185.70**	**826.05**	**265.02**	**46.38**	**C0999-177-2875-S**	**2.284**	**58.00**	**136.30**	**606.28**	**230.45**	**40.33**
C0999-177-3000-M	**0.999**	**25.38**	**0.177**	**4.50**	**3.000**	**76.20**	**2.265**	**57.52**	**2.241**	**56.93**	**185.70**	**826.05**	**252.50**	**44.19**	**C0999-177-3000-S**	**2.379**	**60.43**	**136.30**	**606.28**	**219.56**	**38.42**
C0999-177-3250-M	**0.999**	**25.38**	**0.177**	**4.50**	**3.250**	**82.55**	**2.445**	**62.10**	**2.418**	**61.42**	**185.70**	**826.05**	**230.70**	**40.37**	**C0999-177-3250-S**	**2.571**	**65.29**	**136.30**	**606.28**	**200.61**	**35.11**
C0999-177-3500-M	**0.999**	**25.38**	**0.177**	**4.50**	**3.500**	**88.90**	**2.626**	**66.69**	**2.595**	**65.91**	**185.70**	**826.05**	**212.37**	**37.16**	**C0999-177-3500-S**	**2.762**	**70.15**	**136.30**	**606.28**	**184.67**	**32.32**
C0999-177-3750-M	**0.999**	**25.38**	**0.177**	**4.50**	**3.750**	**95.25**	**2.806**	**71.27**	**2.771**	**70.40**	**185.70**	**826.05**	**196.73**	**34.43**	**C0999-177-3750-S**	**2.953**	**75.01**	**136.30**	**606.28**	**171.07**	**29.94**
C0999-177-4000-M	**0.999**	**25.38**	**0.177**	**4.50**	**4.000**	**101.60**	**2.987**	**75.86**	**2.948**	**74.88**	**185.70**	**826.05**	**183.24**	**32.07**	**C0999-177-4000-S**	**3.145**	**79.87**	**136.30**	**606.28**	**159.34**	**27.89**
C0999-177-4250-M	**0.999**	**25.38**	**0.177**	**4.50**	**4.250**	**107.95**	**3.167**	**80.44**	**3.125**	**79.37**	**185.70**	**826.05**	**171.49**	**30.01**	**C0999-177-4250-S**	**3.336**	**84.73**	**136.30**	**606.28**	**149.12**	**26.10**
C0999-177-4500-M	**0.999**	**25.38**	**0.177**	**4.50**	**4.500**	**114.30**	**3.348**	**85.03**	**3.301**	**83.86**	**185.70**	**826.05**	**161.15**	**28.20**	**C0999-177-4500-S**	**3.527**	**89.59**	**136.30**	**606.28**	**140.13**	**24.52**
C0999-177-4750-M	**0.999**	**25.38**	**0.177**	**4.50**	**4.750**	**120.65**	**3.528**	**89.61**	**3.478**	**88.34**	**185.70**	**826.05**	**151.98**	**26.60**	**C0999-177-4750-S**	**3.719**	**94.45**	**136.30**	**606.28**	**132.16**	**23.13**
C0999-177-5250-M	**0.999**	**25.38**	**0.177**	**4.50**	**5.250**	**133.35**	**3.889**	**98.78**	**3.831**	**97.32**	**185.70**	**826.05**	**136.46**	**23.88**	**C0999-177-5250-S**	**4.101**	**104.18**	**136.30**	**606.28**	**118.66**	**20.77**
C0999-177-5500-M	**0.999**	**25.38**	**0.177**	**4.50**	**5.500**	**139.70**	**4.070**	**103.37**	**4.008**	**101.81**	**185.70**	**826.05**	**129.83**	**22.72**	**C0999-177-5500-S**	**4.293**	**109.04**	**136.30**	**606.28**	**112.90**	**19.76**
C0999-177-5750-M	**0.999**	**25.38**	**0.177**	**4.50**	**5.750**	**146.05**	**4.250**	**107.95**	**4.185**	**106.29**	**185.70**	**826.05**	**123.82**	**21.67**	**C0999-177-5750-S**	**4.484**	**113.90**	**136.30**	**606.28**	**107.67**	**18.84**
C0999-177-6000-M	**0.999**	**25.38**	**0.177**	**4.50**	**6.000**	**152.40**	**4.431**	**112.54**	**4.361**	**110.78**	**185.70**	**826.05**	**118.33**	**20.71**	**C0999-177-6000-S**	**4.675**	**118.76**	**136.30**	**606.28**	**102.90**	**18.01**
C0999-177-6250-M	**0.999**	**25.38**	**0.177**	**4.50**	**6.250**	**158.75**	**4.611**	**117.12**	**4.538**	**115.27**	**185.70**	**826.05**	**113.32**	**19.83**	**C0999-177-6250-S**	**4.867**	**123.62**	**136.30**	**606.28**	**98.54**	**17.24**
C0999-177-6500-M	**0.999**	**25.38**	**0.177**	**4.50**	**6.500**	**165.10**	**4.792**	**121.71**	**4.715**	**119.75**	**185.70**	**826.05**	**108.71**	**19.02**	**C0999-177-6500-S**	**5.058**	**128.48**	**136.30**	**606.28**	**94.53**	**16.54**
C0999-177-6750-M	**0.999**	**25.38**	**0.177**	**4.50**	**6.750**	**171.45**	**4.972**	**126.29**	**4.891**	**124.24**	**185.70**	**826.05**	**104.46**	**18.28**	**C0999-177-6750-S**	**5.249**	**133.34**	**136.30**	**606.28**	**90.83**	**15.90**
C0999-177-7000-M	**0.999**	**25.38**	**0.177**	**4.50**	**7.000**	**177.80**	**5.153**	**130.88**	**5.068**	**128.73**	**185.70**	**826.05**	**100.53**	**17.59**	**C0999-177-7000-S**	**5.441**	**138.20**	**136.30**	**606.28**	**87.42**	**15.30**
C0999-177-7500-M	**0.999**	**25.38**	**0.177**	**4.50**	**7.500**	**190.50**	**5.514**	**140.05**	**5.421**	**137.70**	**185.70**	**826.05**	**93.49**	**16.36**	**C0999-177-7500-S**	**5.824**	**147.92**	**136.30**	**606.28**	**81.30**	**14.23**
C0999-177-8000-M	**0.999**	**25.38**	**0.177**	**4.50**	**8.000**	**203.20**	**5.875**	**149.22**	**5.775**	**146.68**	**185.70**	**826.05**	**87.38**	**15.29**	**C0999-177-8000-S**	**6.206**	**157.64**	**136.30**	**606.28**	**75.98**	**13.30**
C0999-177-8500-M	**0.999**	**25.38**	**0.177**	**4.50**	**8.500**	**215.90**	**6.236**	**158.39**	**6.128**	**155.65**	**185.70**	**826.05**	**82.02**	**14.35**	**C0999-177-8500-S**	**6.589**	**167.36**	**136.30**	**606.28**	**71.32**	**12.48**
C0999-177-9000-M	**0.999**	**25.38**	**0.177**	**4.50**	**9.000**	**228.60**	**6.597**	**167.56**	**6.481**	**164.63**	**185.70**	**826.05**	**77.27**	**13.52**	**C0999-177-9000-S**	**6.972**	**177.08**	**136.30**	**606.28**	**67.19**	**11.76**
C0999-177-9500-M	**0.999**	**25.38**	**0.177**	**4.50**	**9.500**	**241.30**	**6.958**	**176.73**	**6.835**	**173.60**	**185.70**	**826.05**	**73.05**	**12.78**	**C0999-177-9500-S**	**7.354**	**186.80**	**136.30**	**606.28**	**63.52**	**11.12**
C0999-192-1500-M	**0.999**	**25.38**	**0.192**	**4.88**	**1.500**	**38.10**	**1.289**	**32.75**	**1.252**	**31.80**	**186.06**	**827.62**	**882.78**	**154.49**	**C0999-192-1500-S**	**1.282**	**32.56**	**167.45**	**744.87**	**767.64**	**134.34**
C0999-192-1625-M	**0.999**	**25.38**	**0.192**	**4.88**	**1.625**	**41.28**	**1.389**	**35.28**	**1.347**	**34.22**	**187.51**	**834.07**	**793.86**	**138.93**	**C0999-192-1625-S**	**1.382**	**35.11**	**167.45**	**744.87**	**690.32**	**120.81**
C0999-192-1750-M	**0.999**	**25.38**	**0.192**	**4.88**	**1.750**	**44.45**	**1.488**	**37.80**	**1.442**	**36.63**	**188.69**	**839.35**	**721.22**	**126.21**	**C0999-192-1750-S**	**1.483**	**37.67**	**167.45**	**744.87**	**627.15**	**109.75**
C0999-192-1875-M	**0.999**	**25.38**	**0.192**	**4.88**	**1.875**	**47.63**	**1.588**	**40.33**	**1.537**	**39.05**	**189.68**	**843.73**	**660.76**	**115.63**	**C0999-192-1875-S**	**1.584**	**40.22**	**167.45**	**744.87**	**574.57**	**100.55**
C0999-192-2000-M	**0.999**	**25.38**	**0.192**	**4.88**	**2.000**	**50.80**	**1.688**	**42.86**	**1.632**	**41.46**	**190.51**	**847.45**	**609.64**	**106.69**	**C0999-192-2000-S**	**1.684**	**42.78**	**167.45**	**744.87**	**530.13**	**92.77**
C0999-192-2125-M	**0.999**	**25.38**	**0.192**	**4.88**	**2.125**	**53.98**	**1.787**	**45.39**	**1.727**	**43.88**	**191.23**	**850.62**	**565.87**	**99.03**	**C0999-192-2125-S**	**1.785**	**45.33**	**167.45**	**744.87**	**492.06**	**86.11**
C0999-192-2250-M	**0.999**	**25.38**	**0.192**	**4.88**	**2.250**	**57.15**	**1.887**	**47.92**	**1.823**	**46.29**	**191.85**	**853.37**	**527.97**	**92.39**	**C0999-192-2250-S**	**1.885**	**47.89**	**167.45**	**744.87**	**459.10**	**80.34**
C0999-192-2375-M	**0.999**	**25.38**	**0.192**	**4.88**	**2.375**	**60.33**	**1.986**	**50.45**	**1.918**	**48.71**	**192.39**	**855.78**	**494.82**	**86.59**	**C0999-192-2375-S**	**1.986**	**50.44**	**167.45**	**744.87**	**430.28**	**75.30**
C0999-192-2500-M	**0.999**	**25.38**	**0.192**	**4.88**	**2.500**	**63.50**	**2.086**	**52.98**	**2.013**	**51.12**	**192.86**	**857.90**	**465.59**	**81.48**	**C0999-192-2500-S**	**2.086**	**52.99**	**167.45**	**744.87**	**404.86**	**70.85**
C0999-192-2625-M	**0.999**	**25.38**	**0.192**	**4.88**	**2.625**	**66.68**	**2.185**	**55.51**	**2.108**	**53.54**	**193.29**	**859.79**	**439.62**	**76.93**	**C0999-192-2625-S**	**2.187**	**55.55**	**167.45**	**744.87**	**382.28**	**66.90**
C0999-192-2750-M	**0.999**	**25.38**	**0.192**	**4.88**	**2.750**	**69.85**	**2.285**	**58.04**	**2.203**	**55.95**	**193.67**	**861.47**	**416.39**	**72.87**	**C0999-192-2750-S**	**2.288**	**58.10**	**167.45**	**744.87**	**362.08**	**63.36**
C0999-192-2875-M	**0.999**	**25.38**	**0.192**	**4.88**	**2.875**	**73.03**	**2.384**	**60.57**	**2.298**	**58.37**	**194.01**	**862.99**	**395.50**	**69.21**	**C0999-192-2875-S**	**2.388**	**60.66**	**167.45**	**744.87**	**343.91**	**60.18**
C0999-192-3000-M	**0.999**	**25.38**	**0.192**	**4.88**	**3.000**	**76.20**	**2.484**	**63.09**	**2.393**	**60.78**	**194.32**	**864.36**	**376.60**	**65.91**	**C0999-192-3000-S**	**2.489**	**63.21**	**167.45**	**744.87**	**327.48**	**57.31**
C0999-192-3250-M	**0.999**	**25.38**	**0.192**	**4.88**	**3.250**	**82.55**	**2.683**	**68.15**	**2.583**	**65.61**	**194.85**	**866.75**	**343.75**	**60.16**	**C0999-192-3250-S**	**2.690**	**68.32**	**167.45**	**744.87**	**298.91**	**52.31**
C0999-192-3500-M	**0.999**	**25.38**	**0.192**	**4.88**	**3.500**	**88.90**	**2.882**	**73.21**	**2.773**	**70.44**	**195.30**	**868.75**	**316.17**	**55.33**	**C0999-192-3500-S**	**2.891**	**73.43**	**167.45**	**744.87**	**274.93**	**48.11**
C0999-192-3750-M	**0.999**	**25.38**	**0.192**	**4.88**	**3.750**	**95.25**	**3.081**	**78.27**	**2.963**	**75.27**	**195.69**	**870.45**	**292.69**	**51.22**	**C0999-192-3750-S**	**3.092**	**78.54**	**167.45**	**744.87**	**254.51**	**44.54**
C0999-192-4000-M	**0.999**	**25.38**	**0.192**	**4.88**	**4.000**	**101.60**	**3.281**	**83.33**	**3.154**	**80.10**	**196.02**	**871.92**	**272.45**	**47.68**	**C0999-192-4000-S**	**3.293**	**83.65**	**167.45**	**744.87**	**236.91**	**41.46**
C0999-192-4250-M	**0.999**	**25.38**	**0.192**	**4.88**	**4.250**	**107.95**	**3.344**	**84.95**	**3.344**	**84.93**	**230.79**	**1026.62**	**254.83**	**44.60**	**C0999-192-4250-S**	**3.494**	**88.76**	**167.45**	**744.87**	**221.59**	**38.78**
C0999-192-4500-M	**0.999**	**25.38**	**0.192**	**4.88**	**4.500**	**114.30**	**3.536**	**89.81**	**3.534**	**89.76**	**230.79**	**1026.62**	**239.36**	**41.89**	**C0999-192-4500-S**	**3.695**	**93.86**	**167.45**	**744.87**	**208.14**	**36.42**
C0999-192-4750-M	**0.999**	**25.38**	**0.192**	**4.88**	**4.750**	**120.65**	**3.727**	**94.67**	**3.724**	**94.59**	**230.79**	**1026.62**	**225.65**	**39.49**	**C0999-192-4750-S**	**3.897**	**98.97**	**167.45**	**744.87**	**196.22**	**34.34**
C0999-192-5000-M	**0.999**	**25.38**	**0.192**	**4.88**	**5.000**	**127.00**	**3.919**	**99.53**	**3.914**	**99.42**	**230.79**	**1026.62**	**213.43**	**37.35**	**C0999-192-5000-S**	**4.098**	**104.08**	**167.45**	**744.87**	**185.59**	**32.48**
C0999-192-5250-M	**0.999**	**25.38**	**0.192**	**4.88**	**5.250**	**133.35**	**4.110**	**104.40**	**4.104**	**104.25**	**230.79**	**1026.62**	**202.46**	**35.43**	**C0999-192-5250-S**	**4.299**	**109.19**	**167.45**	**744.87**	**176.06**	**30.81**
C0999-192-5500-M	**0.999**	**25.38**	**0.192**	**4.88**	**5.500**	**139.70**	**4.302**	**109.26**	**4.295**	**109.08**	**230.79**	**1026.62**	**192.57**	**33.70**	**C0999-192-5500-S**	**4.500**	**114.30**	**167.45**	**744.87**	**167.45**	**29.30**
C0999-192-5750-M	**0.999**	**25.38**	**0.192**	**4.88**	**5.750**	**146.05**	**4.493**	**114.12**	**4.485**	**113.91**	**230.79**	**1026.62**	**183.60**	**32.13**	**C0999-192-5750-S**	**4.701**	**119.41**	**167.45**	**744.87**	**159.65**	**27.94**
C0999-192-6000-M	**0.999**	**25.38**	**0.192**	**4.88**	**6.000**	**152.40**	**4.684**	**118.98**	**4.675**	**118.74**	**230.79**	**1026.62**	**175.43**	**30.70**	**C0999-192-6000-S**	**4.902**	**124.52**	**167.45**	**744.87**	**152.54**	**26.70**
C0999-192-6250-M	**0.999**	**25.38**	**0.192**	**4.88**	**6.250**	**158.75**	**4.876**	**123.85**	**4.865**	**123.57**	**230.79**	**1026.62**	**167.95**	**29.39**	**C0999-192-6250-S**	**5.103**	**129.63**	**167.45**	**744.87**	**146.04**	**25.56**
C0999-192-6500-M	**0.999**	**25.38**	**0.192**	**4.88**	**6.500**	**165.10**	**5.067**	**128.71**	**5.055**	**128.40**	**230.79**	**1026.62**	**161.08**	**28.19**	**C0999-192-6500-S**	**5.305**	**134.73**	**167.45**	**744.87**	**140.07**	**24.51**

Part Numbers with an "*" are squared and not ground. **Part Numbers in bold** represent the newly expanded Associated Spring RAYMOND compression spring offering.

MUSIC WIRE															STAINLESS STEEL					
Catalog #	Outside Diameter (OD)		Wire Diameter (d)		Free Length (L) Approx		Load Length (L_1)		Solid Height (Sh) Approx		Load (P) at L_1		Spring Rate (R)		Catalog #	Load Length (L_1)		Load (P) at L_1		Spring Rate (R)	
	in	mm	in	mm	in	mm	in	mm	in	mm	lb	N	lb/in	N/mm		in	mm	lb	N	lb/in	N/mm
C0999-192-6750-M	0.999	25.38	0.192	4.88	6.750	171.45	5.259	133.57	5.245	133.23	230.79	1026.62	154.76	27.08	**C0999-192-6750-S**	5.506	139.84	167.45	744.87	134.57	23.55
C0999-192-7000-M	0.999	25.38	0.192	4.88	7.000	177.80	5.450	138.43	5.435	138.06	230.79	1026.62	148.91	26.06	**C0999-192-7000-S**	5.707	144.95	167.45	744.87	129.49	22.66
C0999-192-7500-M	0.999	25.38	0.192	4.88	7.500	190.50	5.833	148.16	5.816	147.72	230.79	1026.62	138.45	24.23	**C0999-192-7500-S**	6.109	155.17	167.45	744.87	120.39	21.07
C0999-192-8000-M	0.999	25.38	0.192	4.88	8.000	203.20	6.216	157.88	6.196	157.38	230.79	1026.62	129.36	22.64	**C0999-192-8000-S**	6.511	165.39	167.45	744.87	112.49	19.68
C0999-192-8500-M	0.999	25.38	0.192	4.88	8.500	215.90	6.599	167.61	6.576	167.04	230.79	1026.62	121.39	21.24	**C0999-192-8500-S**	6.914	175.61	167.45	744.87	105.56	18.47
C0999-192-9000-M	0.999	25.38	0.192	4.88	9.000	228.60	6.982	177.33	6.957	176.70	230.79	1026.62	114.34	20.01	**C0999-192-9000-S**	7.316	185.82	167.45	744.87	99.43	17.40
C0999-192-9500-M	0.999	25.38	0.192	4.88	9.500	241.30	7.364	187.06	7.337	186.36	230.79	1026.62	108.07	18.91	**C0999-192-9500-S**	7.718	196.04	167.45	744.87	93.98	16.45
C1010-112-1000-M	1.010	25.65	0.112	2.85	1.000	25.40	0.613	15.56	0.572	14.52	40.66	180.87	105.00	18.38	**C1010-112-1000-S**	0.613	15.56	33.87	150.66	87.47	15.31
C1010-112-1500-M	1.010	25.65	0.112	2.85	1.500	38.10	0.880	22.35	0.809	20.55	39.68	176.50	64.00	11.20	**C1010-112-1500-S**	0.880	22.35	33.05	147.02	53.31	9.33
C1010-112-2000-M	1.010	25.65	0.112	2.85	2.000	50.80	1.137	28.88	1.034	26.26	39.71	176.62	46.00	8.05	**C1010-112-2000-S**	1.137	28.88	33.07	147.12	38.32	6.71
C1010-112-2500-M	1.010	25.65	0.112	2.85	2.500	63.50	1.391	35.34	1.256	31.89	39.91	177.53	36.00	6.30	**C1010-112-2500-S**	1.391	35.34	33.24	147.88	29.99	5.25
C1010-112-3000-M	1.010	25.65	0.112	2.85	3.000	76.20	1.666	42.31	1.502	38.15	38.69	172.11	29.00	5.08	**C1010-112-3000-S**	1.666	42.31	32.23	143.37	24.16	4.23
C1010-112-3500-M	1.010	25.65	0.112	2.85	3.500	88.90	1.905	48.38	1.705	43.29	39.88	177.39	25.00	4.38	**C1010-112-3500-S**	1.905	48.38	33.22	147.76	20.83	3.64
C1010-112-4000-M	1.010	25.65	0.112	2.85	4.000	101.60	2.142	54.41	1.905	48.38	40.87	181.82	22.00	3.85	**C1010-112-4000-S**	2.142	54.41	34.05	151.46	18.33	3.21
C1010-112-4500-M	1.010	25.65	0.112	2.85	4.500	114.30	2.430	61.73	2.169	55.08	39.32	174.91	19.00	3.33	**C1010-112-4500-S**	2.430	61.73	32.75	145.70	15.83	2.77
C1016-120-1000-M	1.016	25.81	0.120	3.05	1.000	25.40	0.608	15.46	0.538	13.68	66.33	295.06	169.42	29.65	**C1016-120-1000-S**	0.656	16.65	48.62	216.26	141.13	24.70
C1016-120-1500-M	1.016	25.81	0.120	3.05	1.500	38.10	0.851	21.61	0.763	19.38	66.33	295.06	102.19	17.88	**C1016-120-1500-S**	0.929	23.59	48.62	216.26	85.12	14.90
C1016-120-2000-M	1.016	25.81	0.120	3.05	2.000	50.80	1.093	27.77	0.966	24.53	66.33	295.06	73.16	12.80	**C1016-120-2000-S**	1.202	30.54	48.62	216.26	60.94	10.66
C1016-120-2250-M	1.016	25.81	0.120	3.05	2.250	57.15	1.215	30.85	1.067	27.10	66.33	295.06	64.06	11.21	**C1016-120-2250-S**	1.339	34.01	48.62	216.26	53.36	9.34
C1016-120-2563-M	1.016	25.81	0.120	3.05	2.563	65.10	1.367	34.71	1.194	30.32	66.33	295.06	55.44	9.70	**C1016-120-2563-S**	1.510	38.36	48.62	216.26	46.18	8.08
C1016-120-2750-M	1.016	25.81	0.120	3.05	2.750	69.85	1.457	37.01	1.270	32.25	66.33	295.06	51.30	8.98	**C1016-120-2750-S**	1.612	40.95	48.62	216.26	42.73	7.48
C1016-120-3000-M	1.016	25.81	0.120	3.05	3.000	76.20	1.578	40.08	1.371	34.83	66.33	295.06	46.65	8.16	**C1016-120-3000-S**	1.749	44.42	48.62	216.26	38.86	6.80
C1016-120-3500-M	1.016	25.81	0.120	3.05	3.500	88.90	1.821	46.25	1.574	39.98	66.33	295.06	39.50	6.91	**C1016-120-3500-S**	2.022	51.37	48.62	216.26	32.90	5.76
C1016-120-4000-M	1.016	25.81	0.120	3.05	4.000	101.60	2.063	52.41	1.776	45.12	66.33	295.06	34.25	5.99	**C1016-120-4000-S**	2.296	58.32	48.62	216.26	28.53	4.99
C1016-120-4500-M	1.016	25.81	0.120	3.05	4.500	114.30	2.306	58.57	1.979	50.27	66.33	295.06	30.23	5.29	**C1016-120-4500-S**	2.569	65.26	48.62	216.26	25.18	4.41
C1058-085-1875-M	1.058	26.87	0.085	2.16	1.875	47.63	0.716	18.19	0.537	13.65	23.47	104.40	20.26	3.54	**C1058-085-1875-S**	0.829	21.06	18.42	81.93	17.61	3.08
C1058-085-2000-M	1.058	26.87	0.085	2.16	2.000	50.80	0.756	19.21	0.564	14.32	23.47	104.40	18.87	3.30	**C1058-085-2000-S**	0.878	22.29	18.42	81.93	16.41	2.87
C1058-085-2125-M	1.058	26.87	0.085	2.16	2.125	53.98	0.796	20.23	0.590	14.99	23.47	104.40	17.67	3.09	**C1058-085-2125-S**	0.926	23.52	18.42	81.93	15.36	2.69
C1058-085-2250-M	1.058	26.87	0.085	2.16	2.250	57.15	0.836	21.25	0.616	15.66	23.47	104.40	16.60	2.91	**C1058-085-2250-S**	0.974	24.74	18.42	81.93	14.44	2.53
C1058-085-2375-M	1.058	26.87	0.085	2.16	2.375	60.33	0.877	22.26	0.643	16.32	23.47	104.40	15.66	2.74	**C1058-085-2375-S**	1.023	25.97	18.42	81.93	13.62	2.38
C1058-085-2500-M	1.058	26.87	0.085	2.16	2.500	63.50	0.917	23.28	0.669	16.99	23.47	104.40	14.82	2.59	**C1058-085-2500-S**	1.071	27.20	18.42	81.93	12.89	2.26
C1058-085-2625-M	1.058	26.87	0.085	2.16	2.625	66.68	0.957	24.30	0.695	17.66	23.47	104.40	14.07	2.46	**C1058-085-2625-S**	1.119	28.43	18.42	81.93	12.23	2.14
C1058-085-2750-M	1.058	26.87	0.085	2.16	2.750	69.85	0.997	25.32	0.722	18.33	23.47	104.40	13.39	2.34	**C1058-085-2750-S**	1.168	29.66	18.42	81.93	11.64	2.04
C1058-085-2875-M	1.058	26.87	0.085	2.16	2.875	73.03	1.037	26.33	0.748	19.00	23.47	104.40	12.77	2.23	**C1058-085-2875-S**	1.216	30.88	18.42	81.93	11.10	1.94
C1058-085-3000-M	1.058	26.87	0.085	2.16	3.000	76.20	1.077	27.35	0.774	19.67	23.47	104.40	12.20	2.14	**C1058-085-3000-S**	1.264	32.11	18.42	81.93	10.61	1.86
C1058-085-3250-M	1.058	26.87	0.085	2.16	3.250	82.55	1.157	29.39	0.827	21.00	23.47	104.40	11.21	1.96	**C1058-085-3250-S**	1.361	34.57	18.42	81.93	9.75	1.71
C1058-085-3500-M	1.058	26.87	0.085	2.16	3.500	88.90	1.237	31.42	0.880	22.34	23.47	104.40	10.37	1.81	**C1058-085-3500-S**	1.457	37.02	18.42	81.93	9.02	1.58
C1058-085-3750-M	1.058	26.87	0.085	2.16	3.750	95.25	1.317	33.45	0.932	23.68	23.47	104.40	9.65	1.69	**C1058-085-3750-S**	1.554	39.48	18.42	81.93	8.39	1.47
C1058-085-4000-M	1.058	26.87	0.085	2.16	4.000	101.60	1.397	35.49	0.985	25.01	23.47	104.40	9.02	1.58	**C1058-085-4000-S**	1.651	41.93	18.42	81.93	7.84	1.37
C1058-085-4250-M	1.058	26.87	0.085	2.16	4.250	107.95	1.477	37.52	1.037	26.35	23.47	104.40	8.47	1.48	**C1058-085-4250-S**	1.747	44.39	18.42	81.93	7.36	1.29
C1058-085-4500-M	1.058	26.87	0.085	2.16	4.500	114.30	1.557	39.56	1.090	27.69	23.47	104.40	7.98	1.40	**C1058-085-4500-S**	1.844	46.84	18.42	81.93	6.94	1.21
C1058-085-4750-M	1.058	26.87	0.085	2.16	4.750	120.65	1.638	41.59	1.143	29.02	23.47	104.40	7.54	1.32	**C1058-085-4750-S**	1.941	49.30	18.42	81.93	6.56	1.15
C1058-085-5000-M	1.058	26.87	0.085	2.16	5.000	127.00	1.718	43.63	1.195	30.36	23.47	104.40	7.15	1.25	**C1058-085-5000-S**	2.037	51.75	18.42	81.93	6.22	1.09
C1058-085-5250-M	1.058	26.87	0.085	2.16	5.250	133.35	1.798	45.66	1.248	31.70	23.47	104.40	6.80	1.19	**C1058-085-5250-S**	2.134	54.21	18.42	81.93	5.91	1.03
C1058-085-5500-M	1.058	26.87	0.085	2.16	5.500	139.70	1.878	47.70	1.301	33.03	23.47	104.40	6.48	1.13	**C1058-085-5500-S**	2.231	56.66	18.42	81.93	5.63	0.99
C1058-085-5750-M	1.058	26.87	0.085	2.16	5.750	146.05	1.958	49.73	1.353	34.37	23.47	104.40	6.19	1.08	**C1058-085-5750-S**	2.327	59.12	18.42	81.93	5.38	0.94
C1058-085-6000-M	1.058	26.87	0.085	2.16	6.000	152.40	2.038	51.77	1.406	35.71	23.47	104.40	5.92	1.04	**C1058-085-6000-S**	2.424	61.57	18.42	81.93	5.15	0.90
C1058-085-6250-M	1.058	26.87	0.085	2.16	6.250	158.75	2.118	53.80	1.458	37.04	23.47	104.40	5.68	0.99	**C1058-085-6250-S**	2.521	64.03	18.42	81.93	4.94	0.86
C1058-085-6500-M	1.058	26.87	0.085	2.16	6.500	165.10	2.198	55.84	1.511	38.38	23.47	104.40	5.46	0.95	**C1058-085-6500-S**	2.617	66.48	18.42	81.93	4.74	0.83
C1058-085-6750-M	1.058	26.87	0.085	2.16	6.750	171.45	2.278	57.87	1.564	39.72	23.47	104.40	5.25	0.92	**C1058-085-6750-S**	2.714	68.94	18.42	81.93	4.56	0.80
C1058-085-7000-M	1.058	26.87	0.085	2.16	7.000	177.80	2.358	59.91	1.616	41.06	23.47	104.40	5.06	0.88	**C1058-085-7000-S**	2.811	71.39	18.42	81.93	4.40	0.77
C1058-085-7500-M	1.058	26.87	0.085	2.16	7.500	190.50	2.519	63.97	1.722	43.73	23.47	104.40	4.71	0.82	**C1058-085-7500-S**	3.004	76.30	18.42	81.93	4.10	0.72
C1058-085-8000-M	1.058	26.87	0.085	2.16	8.000	203.20	2.679	68.04	1.827	46.40	23.47	104.40	4.41	0.77	**C1058-085-8000-S**	3.197	81.21	18.42	81.93	3.84	0.67
C1058-085-8500-M	1.058	26.87	0.085	2.16	8.500	215.90	2.839	72.11	1.932	49.08	23.47	104.40	4.15	0.73	**C1058-085-8500-S**	3.391	86.12	18.42	81.93	3.61	0.63
C1058-085-9000-M	1.058	26.87	0.085	2.16	9.000	228.60	2.999	76.18	2.037	51.75	23.47	104.40	3.91	0.68	**C1058-085-9000-S**	3.584	91.03	18.42	81.93	3.40	0.60
C1058-085-9500-M	1.058	26.87	0.085	2.16	9.500	241.30	3.160	80.25	2.143	54.42	23.47	104.40	3.70	0.65	**C1058-085-9500-S**	3.777	95.94	18.42	81.93	3.22	0.56
C1058-092-1875-M	1.058	26.87	0.092	2.34	1.875	47.63	0.774	19.66	0.609	15.46	29.25	130.12	26.57	4.65	**C1058-092-1875-S**	0.885	22.49	22.86	101.69	23.10	4.04
C1058-092-2000-M	1.058	26.87	0.092	2.34	2.000	50.80	0.818	20.77	0.639	16.24	29.25	130.12	24.74	4.33	**C1058-092-2000-S**	0.937	23.81	22.86	101.69	21.51	3.76
C1058-092-2125-M	1.058	26.87	0.092	2.34	2.125	53.98	0.861	21.87	0.670	17.02	29.25	130.12	23.15	4.05	**C1058-092-2125-S**	0.989	25.13	22.86	101.69	20.13	3.52
C1058-092-2250-M	1.058	26.87	0.092	2.34	2.250	57.15	0.905	22.98	0.701	17.80	29.25	130.12	21.75	3.81	**C1058-092-2250-S**	1.041	26.44	22.86	101.69	18.91	3.31
C1058-092-2375-M	1.058	26.87	0.092	2.34	2.375	60.33	0.948	24.09	0.731	18.58	29.25	130.12	20.51	3.59	**C1058-092-2375-S**	1.093	27.76	22.86	101.69	17.83	3.12
C1058-092-2500-M	1.058	26.87	0.092	2.34	2.500	63.50	0.992	25.20	0.762	19.36	29.25	130.12	19.40	3.39	**C1058-092-2500-S**	1.145	29.08	22.86	101.69	16.87	2.95
C1058-092-2625-M	1.058	26.87	0.092	2.34	2.625	66.68	1.036	26.30	0.793	20.14	29.25	130.12	18.41	3.22	**C1058-092-2625-S**	1.197	30.39	22.86	101.69	16.00	2.80
C1058-092-2750-M	1.058	26.87	0.092	2.34	2.750	69.85	1.079	27.41	0.824	20.92	29.25	130.12	17.51	3.06	**C1058-092-2750-S**	1.248	31.71	22.86	101.69	15.22	2.66

FOR INFORMATION ON ALTERNATIVE FINISHES, SEE PAGE 311

Part Numbers with an "*" are squared and not ground. **Part Numbers in bold** represent the newly expanded Associated Spring RAYMOND compression spring offering.

MUSIC WIRE																STAINLESS STEEL						
Catalog #	Outside Diameter (OD)		Wire Diameter (d)		Free Length (L) Approx		Load Length (L_1)		Solid Height (Sh) Approx		Load (P) at L_1		Spring Rate (R)		Catalog #	Load Length (L_1)		Load (P) at L_1		Spring Rate (R)	
	in	mm	in	mm	in	mm	in	mm	in	mm	lb	N	lb/in	N/mm		in	mm	lb	N	lb/in	N/mm
C1058-092-2875-M	1.058	26.87	0.092	2.34	2.875	73.03	1.123	28.52	0.854	21.70	29.25	130.12	16.70	2.92	**C1058-092-2875-S**	1.300	33.03	22.86	101.69	14.52	2.54
C1058-092-3000-M	1.058	26.87	0.092	2.34	3.000	76.20	1.166	29.63	0.885	22.48	29.25	130.12	15.95	2.79	**C1058-092-3000-S**	1.352	34.34	22.86	101.69	13.87	2.43
C1058-092-3250-M	1.058	26.87	0.092	2.34	3.250	82.55	1.254	31.84	0.946	24.04	29.25	130.12	14.65	2.56	**C1058-092-3250-S**	1.456	36.98	22.86	101.69	12.74	2.23
C1058-092-3500-M	1.058	26.87	0.092	2.34	3.500	88.90	1.341	34.06	1.008	25.60	29.25	130.12	13.55	2.37	**C1058-092-3500-S**	1.560	39.61	22.86	101.69	11.78	2.06
C1058-092-3750-M	1.058	26.87	0.092	2.34	3.750	95.25	1.428	36.27	1.069	27.16	29.25	130.12	12.60	2.20	**C1058-092-3750-S**	1.663	42.25	22.86	101.69	10.96	1.92
C1058-092-4000-M	1.058	26.87	0.092	2.34	4.000	101.60	1.515	38.49	1.131	28.72	29.25	130.12	11.77	2.06	**C1058-092-4000-S**	1.767	44.88	22.86	101.69	10.24	1.79
C1058-092-4250-M	1.058	26.87	0.092	2.34	4.250	107.95	1.602	40.70	1.192	30.28	29.25	130.12	11.05	1.93	**C1058-092-4250-S**	1.871	47.52	22.86	101.69	9.61	1.68
C1058-092-4500-M	1.058	26.87	0.092	2.34	4.500	114.30	1.690	42.92	1.253	31.84	29.25	130.12	10.41	1.82	**C1058-092-4500-S**	1.974	50.15	22.86	101.69	9.05	1.58
C1058-092-4750-M	1.058	26.87	0.092	2.34	4.750	120.65	1.777	45.13	1.315	33.40	29.25	130.12	9.84	1.72	**C1058-092-4750-S**	2.078	52.78	22.86	101.69	8.56	1.50
C1058-092-5000-M	1.058	26.87	0.092	2.34	5.000	127.00	1.864	47.35	1.376	34.96	29.25	130.12	9.33	1.63	**C1058-092-5000-S**	2.182	55.42	22.86	101.69	8.11	1.42
C1058-092-5250-M	1.058	26.87	0.092	2.34	5.250	133.35	1.951	49.56	1.438	36.52	29.25	130.12	8.87	1.55	**C1058-092-5250-S**	2.286	58.05	22.86	101.69	7.71	1.35
C1058-092-5500-M	1.058	26.87	0.092	2.34	5.500	139.70	2.039	51.78	1.499	38.08	29.25	130.12	8.45	1.48	**C1058-092-5500-S**	2.389	60.69	22.86	101.69	7.35	1.29
C1058-092-5750-M	1.058	26.87	0.092	2.34	5.750	146.05	2.126	53.99	1.560	39.64	29.25	130.12	8.07	1.41	**C1058-092-5750-S**	2.493	63.32	22.86	101.69	7.02	1.23
C1058-092-6000-M	1.058	26.87	0.092	2.34	6.000	152.40	2.213	56.21	1.622	41.20	29.25	130.12	7.73	1.35	**C1058-092-6000-S**	2.597	65.95	22.86	101.69	6.72	1.18
C1058-092-6250-M	1.058	26.87	0.092	2.34	6.250	158.75	2.300	58.42	1.683	42.76	29.25	130.12	7.41	1.30	**C1058-092-6250-S**	2.700	68.59	22.86	101.69	6.44	1.13
C1058-092-6500-M	1.058	26.87	0.092	2.34	6.500	165.10	2.387	60.64	1.745	44.32	29.25	130.12	7.11	1.24	**C1058-092-6500-S**	2.804	71.22	22.86	101.69	6.19	1.08
C1058-092-6750-M	1.058	26.87	0.092	2.34	6.750	171.45	2.475	62.85	1.806	45.88	29.25	130.12	6.84	1.20	**C1058-092-6750-S**	2.908	73.86	22.86	101.69	5.95	1.04
C1058-092-7000-M	1.058	26.87	0.092	2.34	7.000	177.80	2.562	65.07	1.868	47.44	29.25	130.12	6.59	1.15	**C1058-092-7000-S**	3.011	76.49	22.86	101.69	5.73	1.00
C1058-092-7500-M	1.058	26.87	0.092	2.34	7.500	190.50	2.736	69.50	1.990	50.55	29.25	130.12	6.14	1.07	**C1058-092-7500-S**	3.219	81.76	22.86	101.69	5.34	0.93
C1058-092-8000-M	1.058	26.87	0.092	2.34	8.000	203.20	2.911	73.93	2.113	53.67	29.25	130.12	5.75	1.01	**C1058-092-8000-S**	3.426	87.03	22.86	101.69	5.00	0.87
C1058-092-8500-M	1.058	26.87	0.092	2.34	8.500	215.90	3.085	78.36	2.236	56.79	29.25	130.12	5.40	0.95	**C1058-092-8500-S**	3.634	92.30	22.86	101.69	4.70	0.82
C1058-092-9000-M	1.058	26.87	0.092	2.34	9.000	228.60	3.260	82.79	2.359	59.91	29.25	130.12	5.10	0.89	**C1058-092-9000-S**	3.841	97.56	22.86	101.69	4.43	0.78
C1058-092-9500-M	1.058	26.87	0.092	2.34	9.500	241.30	3.434	87.22	2.482	63.03	29.25	130.12	4.82	0.84	**C1058-092-9500-S**	4.049	102.83	22.86	101.69	4.19	0.73
C1058-098-1750-M	1.058	26.87	0.098	2.49	1.750	44.45	0.777	19.74	0.636	16.15	34.87	155.10	35.85	6.27	**C1058-098-1750-S**	0.879	22.33	27.14	120.73	31.17	5.46
C1058-098-1875-M	1.058	26.87	0.098	2.49	1.875	47.63	0.824	20.93	0.671	17.03	34.87	155.10	33.18	5.81	**C1058-098-1875-S**	0.934	23.73	27.14	120.73	28.85	5.05
C1058-098-2000-M	1.058	26.87	0.098	2.49	2.000	50.80	0.871	22.12	0.705	17.91	34.87	155.10	30.88	5.40	**C1058-098-2000-S**	0.989	25.13	27.14	120.73	26.85	4.70
C1058-098-2125-M	1.058	26.87	0.098	2.49	2.125	53.98	0.918	23.31	0.740	18.79	34.87	155.10	28.88	5.05	**C1058-098-2125-S**	1.044	26.52	27.14	120.73	25.11	4.39
C1058-098-2250-M	1.058	26.87	0.098	2.49	2.250	57.15	0.964	24.50	0.774	19.67	34.87	155.10	27.12	4.75	**C1058-098-2250-S**	1.099	27.92	27.14	120.73	23.58	4.13
C1058-098-2375-M	1.058	26.87	0.098	2.49	2.375	60.33	1.011	25.68	0.809	20.55	34.87	155.10	25.57	4.47	**C1058-098-2375-S**	1.154	29.31	27.14	120.73	22.23	3.89
C1058-098-2500-M	1.058	26.87	0.098	2.49	2.500	63.50	1.058	26.87	0.844	21.43	34.87	155.10	24.18	4.23	**C1058-098-2500-S**	1.209	30.71	27.14	120.73	21.03	3.68
C1058-098-2625-M	1.058	26.87	0.098	2.49	2.625	66.68	1.105	28.06	0.878	22.31	34.87	155.10	22.93	4.01	**C1058-098-2625-S**	1.264	32.11	27.14	120.73	19.94	3.49
C1058-098-2750-M	1.058	26.87	0.098	2.49	2.750	69.85	1.151	29.25	0.913	23.19	34.87	155.10	21.81	3.82	**C1058-098-2750-S**	1.319	33.50	27.14	120.73	18.97	3.32
C1058-098-2875-M	1.058	26.87	0.098	2.49	2.875	73.03	1.198	30.43	0.947	24.06	34.87	155.10	20.79	3.64	**C1058-098-2875-S**	1.374	34.90	27.14	120.73	18.08	3.16
C1058-098-3000-M	1.058	26.87	0.098	2.49	3.000	76.20	1.245	31.62	0.982	24.94	34.87	155.10	19.87	3.48	**C1058-098-3000-S**	1.429	36.29	27.14	120.73	17.28	3.02
C1058-098-3250-M	1.058	26.87	0.098	2.49	3.250	82.55	1.338	34.00	1.051	26.70	34.87	155.10	18.24	3.19	**C1058-098-3250-S**	1.539	39.09	27.14	120.73	15.86	2.78
C1058-098-3500-M	1.058	26.87	0.098	2.49	3.500	88.90	1.432	36.37	1.120	28.46	34.87	155.10	16.86	2.95	**C1058-098-3500-S**	1.649	41.88	27.14	120.73	14.66	2.57
C1058-098-3750-M	1.058	26.87	0.098	2.49	3.750	95.25	1.526	38.75	1.190	30.22	34.87	155.10	15.68	2.74	**C1058-098-3750-S**	1.759	44.67	27.14	120.73	13.63	2.39
C1058-098-4000-M	1.058	26.87	0.098	2.49	4.000	101.60	1.619	41.12	1.259	31.97	34.87	155.10	14.64	2.56	**C1058-098-4000-S**	1.869	47.46	27.14	120.73	12.73	2.23
C1058-098-4250-M	1.058	26.87	0.098	2.49	4.250	107.95	1.713	43.50	1.328	33.73	34.87	155.10	13.74	2.40	**C1058-098-4250-S**	1.979	50.26	27.14	120.73	11.95	2.09
C1058-098-4500-M	1.058	26.87	0.098	2.49	4.500	114.30	1.806	45.88	1.397	35.49	34.87	155.10	12.94	2.27	**C1058-098-4500-S**	2.088	53.05	27.14	120.73	11.26	1.97
C1058-098-4750-M	1.058	26.87	0.098	2.49	4.750	120.65	1.900	48.25	1.466	37.25	34.87	155.10	12.23	2.14	**C1058-098-4750-S**	2.198	55.84	27.14	120.73	10.64	1.86
C1058-098-5000-M	1.058	26.87	0.098	2.49	5.000	127.00	1.993	50.63	1.536	39.01	34.87	155.10	11.60	2.03	**C1058-098-5000-S**	2.308	58.63	27.14	120.73	10.08	1.76
C1058-098-5250-M	1.058	26.87	0.098	2.49	5.250	133.35	2.087	53.00	1.605	40.76	34.87	155.10	11.02	1.93	**C1058-098-5250-S**	2.418	61.42	27.14	120.73	9.59	1.68
C1058-098-5500-M	1.058	26.87	0.098	2.49	5.500	139.70	2.180	55.38	1.674	42.52	34.87	155.10	10.50	1.84	**C1058-098-5500-S**	2.528	64.22	27.14	120.73	9.13	1.60
C1058-098-5750-M	1.058	26.87	0.098	2.49	5.750	146.05	2.274	57.75	1.743	44.28	34.87	155.10	10.03	1.76	**C1058-098-5750-S**	2.638	67.01	27.14	120.73	8.72	1.53
C1058-098-6000-M	1.058	26.87	0.098	2.49	6.000	152.40	2.367	60.13	1.812	46.04	34.87	155.10	9.60	1.68	**C1058-098-6000-S**	2.748	69.80	27.14	120.73	8.35	1.46
C1058-098-6250-M	1.058	26.87	0.098	2.49	6.250	158.75	2.461	62.50	1.882	47.79	34.87	155.10	9.20	1.61	**C1058-098-6250-S**	2.858	72.59	27.14	120.73	8.00	1.40
C1058-098-6500-M	1.058	26.87	0.098	2.49	6.500	165.10	2.554	64.88	1.951	49.55	34.87	155.10	8.84	1.55	**C1058-098-6500-S**	2.968	75.38	27.14	120.73	7.68	1.34
C1058-098-6750-M	1.058	26.87	0.098	2.49	6.750	171.45	2.648	67.25	2.020	51.31	34.87	155.10	8.50	1.49	**C1058-098-6750-S**	3.078	78.18	27.14	120.73	7.39	1.29
C1058-098-7000-M	1.058	26.87	0.098	2.49	7.000	177.80	2.741	69.63	2.089	53.07	34.87	155.10	8.19	1.43	**C1058-098-7000-S**	3.188	80.97	27.14	120.73	7.12	1.25
C1058-098-7500-M	1.058	26.87	0.098	2.49	7.500	190.50	2.928	74.38	2.228	56.58	34.87	155.10	7.63	1.33	**C1058-098-7500-S**	3.408	86.55	27.14	120.73	6.63	1.16
C1058-098-8000-M*	1.058	26.87	0.098	2.49	8.000	203.20	3.177	80.69	2.442	62.02	34.87	155.10	7.23	1.27	**C1058-098-8000-S***	3.682	93.53	27.14	120.73	6.29	1.10
C1058-098-8500-M*	1.058	26.87	0.098	2.49	8.500	215.90	3.364	85.44	2.580	65.54	34.87	155.10	6.79	1.19	**C1058-098-8500-S***	3.902	99.12	27.14	120.73	5.90	1.03
C1058-098-9000-M*	1.058	26.87	0.098	2.49	9.000	228.60	3.551	90.19	2.719	69.06	34.87	155.10	6.40	1.12	**C1058-098-9000-S***	4.122	104.70	27.14	120.73	5.56	0.97
C1058-098-9500-M*	1.058	26.87	0.098	2.49	9.500	241.30	3.738	94.94	2.857	72.57	34.87	155.10	6.05	1.06	**C1058-098-9500-S***	4.342	110.28	27.14	120.73	5.26	0.92
C1058-105-1625-M	1.058	26.87	0.105	2.67	1.625	41.28	0.782	19.86	0.665	16.89	42.22	187.81	50.09	8.76	**C1058-105-1625-S**	0.874	22.20	32.71	145.50	43.55	7.62
C1058-105-1750-M	1.058	26.87	0.105	2.67	1.750	44.45	0.833	21.15	0.704	17.89	42.22	187.81	46.02	8.05	**C1058-105-1750-S**	0.933	23.69	32.71	145.50	40.02	7.00
C1058-105-1875-M	1.058	26.87	0.105	2.67	1.875	47.63	0.883	22.43	0.743	18.88	42.22	187.81	42.56	7.45	**C1058-105-1875-S**	0.991	25.18	32.71	145.50	37.01	6.48
C1058-105-2000-M	1.058	26.87	0.105	2.67	2.000	50.80	0.934	23.71	0.783	19.88	42.22	187.81	39.59	6.93	**C1058-105-2000-S**	1.050	26.67	32.71	145.50	34.43	6.02
C1058-105-2125-M	1.058	26.87	0.105	2.67	2.125	53.98	0.984	25.00	0.822	20.88	42.22	187.81	37.01	6.48	**C1058-105-2125-S**	1.109	28.16	32.71	145.50	32.18	5.63
C1058-105-2250-M	1.058	26.87	0.105	2.67	2.250	57.15	1.035	26.28	0.861	21.87	42.22	187.81	34.74	6.08	**C1058-105-2250-S**	1.167	29.65	32.71	145.50	30.21	5.29
C1058-105-2375-M	1.058	26.87	0.105	2.67	2.375	60.33	1.085	27.56	0.900	22.87	42.22	187.81	32.73	5.73	**C1058-105-2375-S**	1.226	31.14	32.71	145.50	28.47	4.98
C1058-105-2500-M	1.058	26.87	0.105	2.67	2.500	63.50	1.136	28.85	0.940	23.87	42.22	187.81	30.95	5.42	**C1058-105-2500-S**	1.285	32.63	32.71	145.50	26.91	4.71
C1058-105-2625-M	1.058	26.87	0.105	2.67	2.625	66.68	1.186	30.13	0.979	24.87	42.22	187.81	29.35	5.14	**C1058-105-2625-S**	1.343	34.12	32.71	145.50	25.52	4.47

Part Numbers with an "*" are squared and not ground. **Part Numbers in bold** represent the newly expanded Associated Spring RAYMOND compression spring offering.

MUSIC WIRE															STAINLESS STEEL						
Catalog #	Outside Diameter (OD)		Wire Diameter (d)		Free Length (L) Approx		Load Length (L_1)		Solid Height (Sh) Approx		Load (P) at L_1		Spring Rate (R)		Catalog #	Load Length (L_1)		Load (P) at L_1		Spring Rate (R)	
	in	mm	in	mm	in	mm	in	mm	in	mm	lb	N	lb/in	N/mm		in	mm	lb	N	lb/in	N/mm
C1058-105-2750-M	1.058	26.87	0.105	2.67	2.750	69.85	1.237	31.41	1.018	25.86	42.22	187.81	27.90	4.88	**C1058-105-2750-S**	1.402	35.61	32.71	145.50	24.26	4.25
C1058-105-2875-M	1.058	26.87	0.105	2.67	2.875	73.03	1.287	32.70	1.057	26.86	42.22	187.81	26.59	4.65	**C1058-105-2875-S**	1.460	37.10	32.71	145.50	23.12	4.05
C1058-105-3000-M	1.058	26.87	0.105	2.67	3.000	76.20	1.338	33.98	1.097	27.86	42.22	187.81	25.40	4.45	**C1058-105-3000-S**	1.519	38.59	32.71	145.50	22.09	3.87
C1058-105-3250-M	1.058	26.87	0.105	2.67	3.250	82.55	1.439	36.55	1.175	29.85	42.22	187.81	23.31	4.08	**C1058-105-3250-S**	1.636	41.56	32.71	145.50	20.27	3.55
C1058-105-3500-M	1.058	26.87	0.105	2.67	3.500	88.90	1.540	39.11	1.254	31.84	42.22	187.81	21.54	3.77	**C1058-105-3500-S**	1.754	44.54	32.71	145.50	18.73	3.28
C1058-105-3750-M	1.058	26.87	0.105	2.67	3.750	95.25	1.641	41.68	1.332	33.84	42.22	187.81	20.02	3.50	**C1058-105-3750-S**	1.871	47.52	32.71	145.50	17.41	3.05
C1058-105-4000-M	1.058	26.87	0.105	2.67	4.000	101.60	1.742	44.25	1.411	35.83	42.22	187.81	18.70	3.27	**C1058-105-4000-S**	1.988	50.50	32.71	145.50	16.26	2.85
C1058-105-4250-M	1.058	26.87	0.105	2.67	4.250	107.95	1.843	46.81	1.489	37.83	42.22	187.81	17.54	3.07	**C1058-105-4250-S**	2.106	53.48	32.71	145.50	15.25	2.67
C1058-105-4500-M	1.058	26.87	0.105	2.67	4.500	114.30	1.944	49.38	1.568	39.82	42.22	187.81	16.52	2.89	**C1058-105-4500-S**	2.223	56.46	32.71	145.50	14.37	2.51
C1058-105-4750-M	1.058	26.87	0.105	2.67	4.750	120.65	2.045	51.95	1.646	41.82	42.22	187.81	15.61	2.73	**C1058-105-4750-S**	2.340	59.44	32.71	145.50	13.57	2.38
C1058-105-5000-M	1.058	26.87	0.105	2.67	5.000	127.00	2.146	54.52	1.725	43.81	42.22	187.81	14.80	2.59	**C1058-105-5000-S**	2.458	62.42	32.71	145.50	12.87	2.25
C1058-105-5250-M	1.058	26.87	0.105	2.67	5.250	133.35	2.247	57.08	1.803	45.80	42.22	187.81	14.06	2.46	**C1058-105-5250-S**	2.575	65.40	32.71	145.50	12.23	2.14
C1058-105-5500-M	1.058	26.87	0.105	2.67	5.500	139.70	2.348	59.65	1.882	47.80	42.22	187.81	13.40	2.34	**C1058-105-5500-S**	2.692	68.38	32.71	145.50	11.65	2.04
C1058-105-5750-M	1.058	26.87	0.105	2.67	5.750	146.05	2.449	62.22	1.960	49.79	42.22	187.81	12.79	2.24	**C1058-105-5750-S**	2.809	71.36	32.71	145.50	11.12	1.95
C1058-105-6000-M	1.058	26.87	0.105	2.67	6.000	152.40	2.551	64.78	2.039	51.79	42.22	187.81	12.24	2.14	**C1058-105-6000-S**	2.927	74.34	32.71	145.50	10.64	1.86
C1058-105-6250-M	1.058	26.87	0.105	2.67	6.250	158.75	2.652	67.35	2.117	53.78	42.22	187.81	11.73	2.05	**C1058-105-6250-S**	3.044	77.32	32.71	145.50	10.20	1.79
C1058-105-6500-M	1.058	26.87	0.105	2.67	6.500	165.10	2.753	69.92	2.196	55.78	42.22	187.81	11.27	1.97	**C1058-105-6500-S**	3.161	80.30	32.71	145.50	9.80	1.71
C1058-105-6750-M	1.058	26.87	0.105	2.67	6.750	171.45	2.854	72.48	2.274	57.77	42.22	187.81	10.84	1.90	**C1058-105-6750-S**	3.279	83.28	32.71	145.50	9.42	1.65
C1058-105-7000-M	1.058	26.87	0.105	2.67	7.000	177.80	2.955	75.05	2.353	59.76	42.22	187.81	10.44	1.83	**C1058-105-7000-S**	3.396	86.26	32.71	145.50	9.08	1.59
C1058-105-7500-M*	1.058	26.87	0.105	2.67	7.500	190.50	3.219	81.77	2.587	65.72	42.22	187.81	9.86	1.73	**C1058-105-7500-S***	3.686	93.63	32.71	145.50	8.58	1.50
C1058-105-8000-M*	1.058	26.87	0.105	2.67	8.000	203.20	3.422	86.91	2.744	69.70	42.22	187.81	9.22	1.61	**C1058-105-8000-S***	3.921	99.59	32.71	145.50	8.02	1.40
C1058-105-8500-M*	1.058	26.87	0.105	2.67	8.500	215.90	3.624	92.04	2.901	73.69	42.22	187.81	8.66	1.52	**C1058-105-8500-S***	4.156	105.55	32.71	145.50	7.53	1.32
C1058-105-9000-M*	1.058	26.87	0.105	2.67	9.000	228.60	3.826	97.17	3.058	77.68	42.22	187.81	8.16	1.43	**C1058-105-9000-S***	4.390	111.51	32.71	145.50	7.10	1.24
C1058-105-9500-M*	1.058	26.87	0.105	2.67	9.500	241.30	4.028	102.31	3.215	81.67	42.22	187.81	7.72	1.35	**C1058-105-9500-S***	4.625	117.47	32.71	145.50	6.71	1.17
C1058-112-1625-M	1.058	26.87	0.112	2.85	1.625	41.28	0.833	21.16	0.728	18.49	50.48	224.55	63.75	11.16	**C1058-112-1625-S**	0.923	23.44	38.92	173.11	55.44	9.70
C1058-112-1750-M	1.058	26.87	0.112	2.85	1.750	44.45	0.887	22.54	0.772	19.61	50.48	224.55	58.53	10.24	**C1058-112-1750-S**	0.985	25.03	38.92	173.11	50.89	8.91
C1058-112-1875-M	1.058	26.87	0.112	2.85	1.875	47.63	0.942	23.92	0.816	20.73	50.48	224.55	54.10	9.47	**C1058-112-1875-S**	1.048	26.61	38.92	173.11	47.04	8.23
C1058-112-2000-M	1.058	26.87	0.112	2.85	2.000	50.80	0.996	25.30	0.860	21.84	50.48	224.55	50.29	8.80	**C1058-112-2000-S**	1.110	28.20	38.92	173.11	43.73	7.65
C1058-112-2125-M	1.058	26.87	0.112	2.85	2.125	53.98	1.051	26.68	0.904	22.96	50.48	224.55	46.98	8.22	**C1058-112-2125-S**	1.172	29.78	38.92	173.11	40.86	7.15
C1058-112-2250-M	1.058	26.87	0.112	2.85	2.250	57.15	1.105	28.06	0.948	24.08	50.48	224.55	44.08	7.71	**C1058-112-2250-S**	1.235	31.36	38.92	173.11	38.33	6.71
C1058-112-2375-M	1.058	26.87	0.112	2.85	2.375	60.33	1.159	29.44	0.992	25.19	50.48	224.55	41.52	7.27	**C1058-112-2375-S**	1.297	32.95	38.92	173.11	36.11	6.32
C1058-112-2500-M	1.058	26.87	0.112	2.85	2.500	63.50	1.214	30.82	1.036	26.31	50.48	224.55	39.24	6.87	**C1058-112-2500-S**	1.360	34.53	38.92	173.11	34.12	5.97
C1058-112-2625-M	1.058	26.87	0.112	2.85	2.625	66.68	1.268	32.21	1.080	27.43	50.48	224.55	37.20	6.51	**C1058-112-2625-S**	1.422	36.12	38.92	173.11	32.35	5.66
C1058-112-2750-M	1.058	26.87	0.112	2.85	2.750	69.85	1.322	33.59	1.124	28.55	50.48	224.55	35.36	6.19	**C1058-112-2750-S**	1.484	37.70	38.92	173.11	30.75	5.38
C1058-112-2875-M	1.058	26.87	0.112	2.85	2.875	73.03	1.377	34.97	1.168	29.66	50.48	224.55	33.69	5.90	**C1058-112-2875-S**	1.547	39.28	38.92	173.11	29.30	5.13
C1058-112-3000-M	1.058	26.87	0.112	2.85	3.000	76.20	1.431	36.35	1.212	30.78	50.48	224.55	32.17	5.63	**C1058-112-3000-S**	1.609	40.87	38.92	173.11	27.98	4.90
C1058-112-3250-M	1.058	26.87	0.112	2.85	3.250	82.55	1.540	39.11	1.300	33.01	50.48	224.55	29.52	5.17	**C1058-112-3250-S**	1.734	44.04	38.92	173.11	25.67	4.49
C1058-112-3500-M	1.058	26.87	0.112	2.85	3.500	88.90	1.648	41.87	1.388	35.25	50.48	224.55	27.26	4.77	**C1058-112-3500-S**	1.858	47.20	38.92	173.11	23.71	4.15
C1058-112-3750-M	1.058	26.87	0.112	2.85	3.750	95.25	1.757	44.63	1.476	37.48	50.48	224.55	25.33	4.43	**C1058-112-3750-S**	1.983	50.37	38.92	173.11	22.03	3.85
C1058-112-4000-M	1.058	26.87	0.112	2.85	4.000	101.60	1.866	47.39	1.564	39.71	50.48	224.55	23.65	4.14	**C1058-112-4000-S**	2.108	53.54	38.92	173.11	20.57	3.60
C1058-112-4250-M	1.058	26.87	0.112	2.85	4.250	107.95	1.974	50.15	1.652	41.95	50.48	224.55	22.18	3.88	**C1058-112-4250-S**	2.233	56.71	38.92	173.11	19.29	3.38
C1058-112-4500-M	1.058	26.87	0.112	2.85	4.500	114.30	2.083	52.91	1.739	44.18	50.48	224.55	20.89	3.66	**C1058-112-4500-S**	2.357	59.88	38.92	173.11	18.16	3.18
C1058-112-4750-M	1.058	26.87	0.112	2.85	4.750	120.65	2.192	55.67	1.827	46.42	50.48	224.55	19.73	3.45	**C1058-112-4750-S**	2.482	63.04	38.92	173.11	17.16	3.00
C1058-112-5000-M	1.058	26.87	0.112	2.85	5.000	127.00	2.301	58.43	1.915	48.65	50.48	224.55	18.70	3.27	**C1058-112-5000-S**	2.607	66.21	38.92	173.11	16.26	2.85
C1058-112-5250-M	1.058	26.87	0.112	2.85	5.250	133.35	2.409	61.19	2.003	50.88	50.48	224.55	17.77	3.11	**C1058-112-5250-S**	2.732	69.38	38.92	173.11	15.45	2.70
C1058-112-5500-M	1.058	26.87	0.112	2.85	5.500	139.70	2.518	63.96	2.091	53.12	50.48	224.55	16.93	2.96	**C1058-112-5500-S**	2.856	72.55	38.92	173.11	14.72	2.58
C1058-112-5750-M	1.058	26.87	0.112	2.85	5.750	146.05	2.627	66.72	2.179	55.35	50.48	224.55	16.16	2.83	**C1058-112-5750-S**	2.981	75.72	38.92	173.11	14.05	2.46
C1058-112-6000-M	1.058	26.87	0.112	2.85	6.000	152.40	2.735	69.48	2.267	57.59	50.48	224.55	15.46	2.71	**C1058-112-6000-S**	3.106	78.89	38.92	173.11	13.45	2.35
C1058-112-6250-M	1.058	26.87	0.112	2.85	6.250	158.75	2.844	72.24	2.355	59.82	50.48	224.55	14.82	2.59	**C1058-112-6250-S**	3.230	82.05	38.92	173.11	12.89	2.26
C1058-112-6500-M	1.058	26.87	0.112	2.85	6.500	165.10	2.953	75.00	2.443	62.05	50.48	224.55	14.23	2.49	**C1058-112-6500-S**	3.355	85.22	38.92	173.11	12.38	2.17
C1058-112-6750-M	1.058	26.87	0.112	2.85	6.750	171.45	3.061	77.76	2.531	64.29	50.48	224.55	13.69	2.40	**C1058-112-6750-S**	3.480	88.39	38.92	173.11	11.90	2.08
C1058-112-7000-M	1.058	26.87	0.112	2.85	7.000	177.80	3.170	80.52	2.619	66.52	50.48	224.55	13.18	2.31	**C1058-112-7000-S**	3.605	91.56	38.92	173.11	11.46	2.01
C1058-112-7500-M	1.058	26.87	0.112	2.85	7.500	190.50	3.388	86.04	2.795	70.99	50.48	224.55	12.28	2.15	**C1058-112-7500-S**	3.854	97.89	38.92	173.11	10.67	1.87
C1058-112-8000-M	1.058	26.87	0.112	2.85	8.000	203.20	3.605	91.56	2.971	75.46	50.48	224.55	11.49	2.01	**C1058-112-8000-S**	4.104	104.23	38.92	173.11	9.99	1.75
C1058-112-8500-M*	1.058	26.87	0.112	2.85	8.500	215.90	3.886	98.69	3.225	81.91	50.48	224.55	10.94	1.91	**C1058-112-8500-S***	4.409	111.99	38.92	173.11	9.51	1.66
C1058-112-9000-M*	1.058	26.87	0.112	2.85	9.000	228.60	4.103	104.22	3.401	86.38	50.48	224.55	10.31	1.80	**C1058-112-9000-S***	4.659	118.33	38.92	173.11	8.96	1.57
C1058-112-9500-M*	1.058	26.87	0.112	2.85	9.500	241.30	4.320	109.74	3.577	90.85	50.48	224.55	9.75	1.71	**C1058-112-9500-S***	4.908	124.66	38.92	173.11	8.48	1.48
C1058-125-1500-M	1.058	26.87	0.125	3.18	1.500	38.10	0.864	21.96	0.790	20.06	68.36	304.07	107.55	18.82	**C1058-125-1500-S**	0.942	23.92	52.20	232.20	93.52	16.37
C1058-125-1625-M	1.058	26.87	0.125	3.18	1.625	41.28	0.926	23.52	0.843	21.40	68.36	304.07	97.77	17.11	**C1058-125-1625-S**	1.011	25.68	52.20	232.20	85.02	14.88
C1058-125-1750-M	1.058	26.87	0.125	3.18	1.750	44.45	0.987	25.08	0.895	22.74	68.36	304.07	89.62	15.68	**C1058-125-1750-S**	1.080	27.44	52.20	232.20	77.93	13.64
C1058-125-1875-M	1.058	26.87	0.125	3.18	1.875	47.63	1.049	26.64	0.948	24.08	68.36	304.07	82.73	14.48	**C1058-125-1875-S**	1.149	29.19	52.20	232.20	71.94	12.59
C1058-125-2000-M	1.058	26.87	0.125	3.18	2.000	50.80	1.110	28.20	1.001	25.42	68.36	304.07	76.82	13.44	**C1058-125-2000-S**	1.219	30.95	52.20	232.20	66.80	11.69
C1058-125-2125-M	1.058	26.87	0.125	3.18	2.125	53.98	1.172	29.76	1.054	26.76	68.36	304.07	71.70	12.55	**C1058-125-2125-S**	1.288	32.71	52.20	232.20	62.35	10.91
C1058-125-2250-M	1.058	26.87	0.125	3.18	2.250	57.15	1.233	31.32	1.106	28.10	68.36	304.07	67.22	11.76	**C1058-125-2250-S**	1.357	34.47	52.20	232.20	58.45	10.23

FOR INFORMATION ON ALTERNATIVE FINISHES, SEE PAGE 311

Part Numbers with an "*" are squared and not ground. **Part Numbers in bold** represent the newly expanded Associated Spring RAYMOND compression spring offering.

MUSIC WIRE																STAINLESS STEEL						
Catalog #	Outside Diameter (OD)		Wire Diameter (d)		Free Length (L) Approx		Load Length (L_1)		Solid Height (Sh) Approx		Load (P) at L_1		Spring Rate (R)		Catalog #	Load Length (L_1)		Load (P) at L_1		Spring Rate (R)	
	in	mm	in	mm	in	mm	in	mm	in	mm	lb	N	lb/in	N/mm		in	mm	lb	N	lb/in	N/mm
C1058-125-2375-M	1.058	26.87	0.125	3.18	2.375	60.33	1.294	32.88	1.159	29.44	68.36	304.07	63.26	11.07	**C1058-125-2375-S**	1.426	36.22	52.20	232.20	55.01	9.63
C1058-125-2500-M	1.058	26.87	0.125	3.18	2.500	63.50	1.356	34.44	1.212	30.78	68.36	304.07	59.75	10.46	**C1058-125-2500-S**	1.495	37.98	52.20	232.20	51.96	9.09
C1058-125-2625-M	1.058	26.87	0.125	3.18	2.625	66.68	1.417	36.00	1.264	32.12	68.36	304.07	56.60	9.91	**C1058-125-2625-S**	1.564	39.74	52.20	232.20	49.22	8.61
C1058-125-2750-M	1.058	26.87	0.125	3.18	2.750	69.85	1.479	37.56	1.317	33.46	68.36	304.07	53.77	9.41	**C1058-125-2750-S**	1.634	41.49	52.20	232.20	46.76	8.18
C1058-125-2875-M	1.058	26.87	0.125	3.18	2.875	73.03	1.540	39.12	1.370	34.80	68.36	304.07	51.21	8.96	**C1058-125-2875-S**	1.703	43.25	52.20	232.20	44.53	7.79
C1058-125-3000-M	1.058	26.87	0.125	3.18	3.000	76.20	1.602	40.68	1.423	36.14	68.36	304.07	48.89	8.56	**C1058-125-3000-S**	1.772	45.01	52.20	232.20	42.51	7.44
C1058-125-3250-M	1.058	26.87	0.125	3.18	3.250	82.55	1.725	43.80	1.528	38.81	68.36	304.07	44.81	7.84	**C1058-125-3250-S**	1.910	48.52	52.20	232.20	38.97	6.82
C1058-125-3500-M	1.058	26.87	0.125	3.18	3.500	88.90	1.847	46.93	1.634	41.49	68.36	304.07	41.37	7.24	**C1058-125-3500-S**	2.049	52.04	52.20	232.20	35.97	6.29
C1058-125-3750-M	1.058	26.87	0.125	3.18	3.750	95.25	1.970	50.05	1.739	44.17	68.36	304.07	38.41	6.72	**C1058-125-3750-S**	2.187	55.55	52.20	232.20	33.40	5.85
C1058-125-4000-M	1.058	26.87	0.125	3.18	4.000	101.60	2.093	53.17	1.845	46.85	68.36	304.07	35.85	6.27	**C1058-125-4000-S**	2.325	59.07	52.20	232.20	31.17	5.46
C1058-125-4250-M	1.058	26.87	0.125	3.18	4.250	107.95	2.216	56.29	1.950	49.53	68.36	304.07	33.61	5.88	**C1058-125-4250-S**	2.464	62.58	52.20	232.20	29.23	5.11
C1058-125-4500-M	1.058	26.87	0.125	3.18	4.500	114.30	2.339	59.41	2.055	52.21	68.36	304.07	31.63	5.54	**C1058-125-4500-S**	2.602	66.10	52.20	232.20	27.51	4.81
C1058-125-4750-M	1.058	26.87	0.125	3.18	4.750	120.65	2.462	62.53	2.161	54.89	68.36	304.07	29.88	5.23	**C1058-125-4750-S**	2.741	69.61	52.20	232.20	25.98	4.55
C1058-125-5000-M	1.058	26.87	0.125	3.18	5.000	127.00	2.585	65.65	2.266	57.57	68.36	304.07	28.30	4.95	**C1058-125-5000-S**	2.879	73.13	52.20	232.20	24.61	4.31
C1058-125-5250-M	1.058	26.87	0.125	3.18	5.250	133.35	2.708	68.77	2.372	60.25	68.36	304.07	26.89	4.71	**C1058-125-5250-S**	3.017	76.64	52.20	232.20	23.38	4.09
C1058-125-5500-M	1.058	26.87	0.125	3.18	5.500	139.70	2.830	71.89	2.477	62.93	68.36	304.07	25.61	4.48	**C1058-125-5500-S**	3.156	80.15	52.20	232.20	22.27	3.90
C1058-125-5750-M	1.058	26.87	0.125	3.18	5.750	146.05	2.953	75.02	2.583	65.60	68.36	304.07	24.44	4.28	**C1058-125-5750-S**	3.294	83.67	52.20	232.20	21.26	3.72
C1058-125-6000-M	1.058	26.87	0.125	3.18	6.000	152.40	3.076	78.14	2.688	68.28	68.36	304.07	23.38	4.09	**C1058-125-6000-S**	3.432	87.18	52.20	232.20	20.33	3.56
C1058-125-6250-M	1.058	26.87	0.125	3.18	6.250	158.75	3.199	81.26	2.794	70.96	68.36	304.07	22.41	3.92	**C1058-125-6250-S**	3.571	90.70	52.20	232.20	19.48	3.41
C1058-125-6500-M	1.058	26.87	0.125	3.18	6.500	165.10	3.322	84.38	2.899	73.64	68.36	304.07	21.51	3.76	**C1058-125-6500-S**	3.709	94.21	52.20	232.20	18.70	3.27
C1058-125-6750-M	1.058	26.87	0.125	3.18	6.750	171.45	3.445	87.50	3.005	76.32	68.36	304.07	20.68	3.62	**C1058-125-6750-S**	3.847	97.73	52.20	232.20	17.99	3.15
C1058-125-7000-M	1.058	26.87	0.125	3.18	7.000	177.80	3.568	90.62	3.110	79.00	68.36	304.07	19.92	3.49	**C1058-125-7000-S**	3.986	101.24	52.20	232.20	17.32	3.03
C1058-125-7500-M	1.058	26.87	0.125	3.18	7.500	190.50	3.814	96.86	3.321	84.36	68.36	304.07	18.54	3.25	**C1058-125-7500-S**	4.263	108.27	52.20	232.20	16.12	2.82
C1058-125-8000-M	1.058	26.87	0.125	3.18	8.000	203.20	4.059	103.11	3.532	89.71	68.36	304.07	17.35	3.04	**C1058-125-8000-S**	4.539	115.30	52.20	232.20	15.08	2.64
C1058-125-8500-M	1.058	26.87	0.125	3.18	8.500	215.90	4.305	109.35	3.743	95.07	68.36	304.07	16.30	2.85	**C1058-125-8500-S**	4.816	122.33	52.20	232.20	14.17	2.48
C1058-125-9000-M	1.058	26.87	0.125	3.18	9.000	228.60	4.551	115.59	3.954	100.43	68.36	304.07	15.36	2.69	**C1058-125-9000-S**	5.093	129.36	52.20	232.20	13.36	2.34
C1058-125-9500-M	1.058	26.87	0.125	3.18	9.500	241.30	4.797	121.83	4.165	105.79	68.36	304.07	14.53	2.54	**C1058-125-9500-S**	5.370	136.39	52.20	232.20	12.64	2.21
C1058-135-1500-M	1.058	26.87	0.135	3.43	1.500	38.10	0.927	23.55	0.867	22.03	84.47	375.75	147.44	25.80	**C1058-135-1500-S**	1.001	25.42	64.03	284.80	128.21	22.44
C1058-135-1625-M	1.058	26.87	0.135	3.43	1.625	41.28	0.994	25.24	0.927	23.54	84.47	375.75	133.84	23.42	**C1058-135-1625-S**	1.075	27.30	64.03	284.80	116.38	20.37
C1058-135-1750-M	1.058	26.87	0.135	3.43	1.750	44.45	1.061	26.94	0.986	25.04	84.47	375.75	122.54	21.44	**C1058-135-1750-S**	1.149	29.19	64.03	284.80	106.55	18.65
C1058-135-1875-M	1.058	26.87	0.135	3.43	1.875	47.63	1.127	28.64	1.045	26.55	84.47	375.75	112.99	19.77	**C1058-135-1875-S**	1.223	31.07	64.03	284.80	98.25	17.19
C1058-135-2000-M	1.058	26.87	0.135	3.43	2.000	50.80	1.194	30.33	1.105	28.06	84.47	375.75	104.83	18.34	**C1058-135-2000-S**	1.298	32.96	64.03	284.80	91.16	15.95
C1058-135-2125-M	1.058	26.87	0.135	3.43	2.125	53.98	1.261	32.03	1.164	29.56	84.47	375.75	97.76	17.11	**C1058-135-2125-S**	1.372	34.85	64.03	284.80	85.01	14.88
C1058-135-2250-M	1.058	26.87	0.135	3.43	2.250	57.15	1.328	33.72	1.223	31.07	84.47	375.75	91.59	16.03	**C1058-135-2250-S**	1.446	36.73	64.03	284.80	79.65	13.94
C1058-135-2375-M	1.058	26.87	0.135	3.43	2.375	60.33	1.395	35.42	1.283	32.58	84.47	375.75	86.15	15.08	**C1058-135-2375-S**	1.520	38.62	64.03	284.80	74.92	13.11
C1058-135-2500-M	1.058	26.87	0.135	3.43	2.500	63.50	1.461	37.12	1.342	34.08	84.47	375.75	81.32	14.23	**C1058-135-2500-S**	1.595	40.50	64.03	284.80	70.72	12.38
C1058-135-2625-M	1.058	26.87	0.135	3.43	2.625	66.68	1.528	38.81	1.401	35.59	84.47	375.75	77.01	13.48	**C1058-135-2625-S**	1.669	42.39	64.03	284.80	66.96	11.72
C1058-135-2750-M	1.058	26.87	0.135	3.43	2.750	69.85	1.595	40.51	1.461	37.10	84.47	375.75	73.13	12.80	**C1058-135-2750-S**	1.743	44.28	64.03	284.80	63.59	11.13
C1058-135-2875-M	1.058	26.87	0.135	3.43	2.875	73.03	1.662	42.20	1.520	38.60	84.47	375.75	69.62	12.18	**C1058-135-2875-S**	1.817	46.16	64.03	284.80	60.54	10.59
C1058-135-3000-M	1.058	26.87	0.135	3.43	3.000	76.20	1.728	43.90	1.579	40.11	84.47	375.75	66.43	11.63	**C1058-135-3000-S**	1.892	48.05	64.03	284.80	57.77	10.11
C1058-135-3250-M	1.058	26.87	0.135	3.43	3.250	82.55	1.862	47.29	1.698	43.13	84.47	375.75	60.86	10.65	**C1058-135-3250-S**	2.040	51.82	64.03	284.80	52.92	9.26
C1058-135-3500-M	1.058	26.87	0.135	3.43	3.500	88.90	1.995	50.69	1.816	46.14	84.47	375.75	56.15	9.83	**C1058-135-3500-S**	2.189	55.59	64.03	284.80	48.82	8.54
C1058-135-3750-M	1.058	26.87	0.135	3.43	3.750	95.25	2.129	54.08	1.935	49.15	84.47	375.75	52.11	9.12	**C1058-135-3750-S**	2.337	59.36	64.03	284.80	45.32	7.93
C1058-135-4000-M	1.058	26.87	0.135	3.43	4.000	101.60	2.263	57.47	2.054	52.17	84.47	375.75	48.62	8.51	**C1058-135-4000-S**	2.486	63.13	64.03	284.80	42.28	7.40
C1058-135-4250-M	1.058	26.87	0.135	3.43	4.250	107.95	2.396	60.86	2.172	55.18	84.47	375.75	45.57	7.97	**C1058-135-4250-S**	2.634	66.91	64.03	284.80	39.62	6.93
C1058-135-4500-M	1.058	26.87	0.135	3.43	4.500	114.30	2.530	64.25	2.291	58.19	84.47	375.75	42.87	7.50	**C1058-135-4500-S**	2.783	70.68	64.03	284.80	37.28	6.52
C1058-135-4750-M	1.058	26.87	0.135	3.43	4.750	120.65	2.663	67.65	2.410	61.21	84.47	375.75	40.48	7.08	**C1058-135-4750-S**	2.931	74.45	64.03	284.80	35.20	6.16
C1058-135-5000-M	1.058	26.87	0.135	3.43	5.000	127.00	2.797	71.04	2.528	64.22	84.47	375.75	38.34	6.71	**C1058-135-5000-S**	3.080	78.22	64.03	284.80	33.34	5.83
C1058-135-5250-M	1.058	26.87	0.135	3.43	5.250	133.35	2.930	74.43	2.647	67.24	84.47	375.75	36.42	6.37	**C1058-135-5250-S**	3.228	81.99	64.03	284.80	31.67	5.54
C1058-135-5500-M	1.058	26.87	0.135	3.43	5.500	139.70	3.064	77.82	2.766	70.25	84.47	375.75	34.68	6.07	**C1058-135-5500-S**	3.377	85.77	64.03	284.80	30.15	5.28
C1058-135-5750-M	1.058	26.87	0.135	3.43	5.750	146.05	3.197	81.22	2.884	73.26	84.47	375.75	33.09	5.79	**C1058-135-5750-S**	3.525	89.54	64.03	284.80	28.78	5.04
C1058-135-6000-M	1.058	26.87	0.135	3.43	6.000	152.40	3.331	84.61	3.003	76.28	84.47	375.75	31.65	5.54	**C1058-135-6000-S**	3.674	93.31	64.03	284.80	27.52	4.82
C1058-135-6250-M	1.058	26.87	0.135	3.43	6.250	158.75	3.465	88.00	3.122	79.29	84.47	375.75	30.33	5.31	**C1058-135-6250-S**	3.822	97.08	64.03	284.80	26.37	4.61
C1058-135-6500-M	1.058	26.87	0.135	3.43	6.500	165.10	3.598	91.39	3.240	82.30	84.47	375.75	29.11	5.09	**C1058-135-6500-S**	3.971	100.85	64.03	284.80	25.31	4.43
C1058-135-6750-M	1.058	26.87	0.135	3.43	6.750	171.45	3.732	94.78	3.359	85.32	84.47	375.75	27.99	4.90	**C1058-135-6750-S**	4.119	104.63	64.03	284.80	24.34	4.26
C1058-135-7000-M	1.058	26.87	0.135	3.43	7.000	177.80	3.865	98.18	3.478	88.33	84.47	375.75	26.95	4.72	**C1058-135-7000-S**	4.268	108.40	64.03	284.80	23.43	4.10
C1058-135-7500-M	1.058	26.87	0.135	3.43	7.500	190.50	4.132	104.96	3.715	94.36	84.47	375.75	25.08	4.39	**C1058-135-7500-S**	4.565	115.94	64.03	284.80	21.81	3.82
C1058-135-8000-M	1.058	26.87	0.135	3.43	8.000	203.20	4.399	111.75	3.952	100.39	84.47	375.75	23.46	4.11	**C1058-135-8000-S**	4.862	123.48	64.03	284.80	20.40	3.57
C1058-135-8500-M	1.058	26.87	0.135	3.43	8.500	215.90	4.667	118.53	4.190	106.41	84.47	375.75	22.04	3.86	**C1058-135-8500-S**	5.159	131.03	64.03	284.80	19.16	3.35
C1058-135-9000-M	1.058	26.87	0.135	3.43	9.000	228.60	4.934	125.31	4.427	112.44	84.47	375.75	20.77	3.64	**C1058-135-9000-S**	5.456	138.57	64.03	284.80	18.06	3.16
C1058-135-9500-M	1.058	26.87	0.135	3.43	9.500	241.30	5.201	132.10	4.664	118.47	84.47	375.75	19.65	3.44	**C1058-135-9500-S**	5.753	146.12	64.03	284.80	17.09	2.99
C1058-148-1500-M	1.058	26.87	0.148	3.76	1.500	38.10	1.003	25.48	0.961	24.41	108.67	483.38	218.69	38.27	**C1058-148-1500-S**	1.071	27.21	81.55	362.77	190.16	33.28
C1058-148-1625-M	1.058	26.87	0.148	3.76	1.625	41.28	1.076	27.34	1.029	26.13	108.67	483.38	198.12	34.67	**C1058-148-1625-S**	1.152	29.25	81.55	362.77	172.28	30.15
C1058-148-1750-M	1.058	26.87	0.148	3.76	1.750	44.45	1.150	29.21	1.096	27.84	108.67	483.38	181.09	31.69	**C1058-148-1750-S**	1.232	31.29	81.55	362.77	157.47	27.56

Part Numbers with an "*" are squared and not ground. **Part Numbers in bold** represent the newly expanded Associated Spring RAYMOND compression spring offering.

MUSIC WIRE														
Catalog #	Outside Diameter (OD)		Wire Diameter (d)		Free Length (L) Approx		Load Length (L_1)		Solid Height (Sh) Approx		Load (P) at L_1		Spring Rate (R)	
	in	mm	in	mm	in	mm	in	mm	in	mm	lb	N	lb/in	N/mm
C1058-148-1875-M	1.058	26.87	0.148	3.76	1.875	47.63	1.223	31.07	1.164	29.56	108.67	483.38	166.75	29.18
C1058-148-2000-M	1.058	26.87	0.148	3.76	2.000	50.80	1.297	32.94	1.231	31.27	108.67	483.38	154.52	27.04
C1058-148-2125-M	1.058	26.87	0.148	3.76	2.125	53.98	1.370	34.80	1.299	32.99	108.67	483.38	143.96	25.19
C1058-148-2250-M	1.058	26.87	0.148	3.76	2.250	57.15	1.444	36.67	1.366	34.70	108.67	483.38	134.75	23.58
C1058-148-2375-M	1.058	26.87	0.148	3.76	2.375	60.33	1.517	38.53	1.434	36.42	108.67	483.38	126.65	22.16
C1058-148-2500-M	1.058	26.87	0.148	3.76	2.500	63.50	1.590	40.40	1.501	38.13	108.67	483.38	119.47	20.91
C1058-148-2625-M	1.058	26.87	0.148	3.76	2.625	66.68	1.664	42.26	1.569	39.85	108.67	483.38	113.05	19.78
C1058-148-2750-M	1.058	26.87	0.148	3.76	2.750	69.85	1.737	44.12	1.636	41.56	108.67	483.38	107.29	18.78
C1058-148-2875-M	1.058	26.87	0.148	3.76	2.875	73.03	1.811	45.99	1.704	43.28	108.67	483.38	102.09	17.87
C1058-148-3000-M	1.058	26.87	0.148	3.76	3.000	76.20	1.884	47.85	1.771	44.99	108.67	483.38	97.37	17.04
C1058-148-3250-M	1.058	26.87	0.148	3.76	3.250	82.55	2.031	51.58	1.906	48.42	108.67	483.38	89.13	15.60
C1058-148-3500-M	1.058	26.87	0.148	3.76	3.500	88.90	2.178	55.31	2.042	51.85	108.67	483.38	82.18	14.38
C1058-148-3750-M	1.058	26.87	0.148	3.76	3.750	95.25	2.324	59.04	2.177	55.28	108.67	483.38	76.23	13.34
C1058-148-4000-M	1.058	26.87	0.148	3.76	4.000	101.60	2.471	62.77	2.312	58.71	108.67	483.38	71.09	12.44
C1058-148-4250-M	1.058	26.87	0.148	3.76	4.250	107.95	2.618	66.50	2.447	62.14	108.67	483.38	66.59	11.65
C1058-148-4500-M	1.058	26.87	0.148	3.76	4.500	114.30	2.765	70.23	2.582	65.57	108.67	483.38	62.63	10.96
C1058-148-4750-M	1.058	26.87	0.148	3.76	4.750	120.65	2.912	73.96	2.717	69.00	108.67	483.38	59.12	10.35
C1058-148-5000-M	1.058	26.87	0.148	3.76	5.000	127.00	3.059	77.69	2.852	72.43	108.67	483.38	55.97	9.80
C1058-148-5250-M	1.058	26.87	0.148	3.76	5.250	133.35	3.205	81.42	2.987	75.86	108.67	483.38	53.15	9.30
C1058-148-5500-M	1.058	26.87	0.148	3.76	5.500	139.70	3.352	85.15	3.122	79.29	108.67	483.38	50.60	8.85
C1058-148-5750-M	1.058	26.87	0.148	3.76	5.750	146.05	3.499	88.88	3.257	82.72	108.67	483.38	48.28	8.45
C1058-148-6000-M	1.058	26.87	0.148	3.76	6.000	152.40	3.646	92.60	3.392	86.16	108.67	483.38	46.16	8.08
C1058-148-6250-M	1.058	26.87	0.148	3.76	6.250	158.75	3.793	96.33	3.527	89.59	108.67	483.38	44.22	7.74
C1058-148-6500-M	1.058	26.87	0.148	3.76	6.500	165.10	3.939	100.06	3.662	93.02	108.67	483.38	42.44	7.43
C1058-148-6750-M	1.058	26.87	0.148	3.76	6.750	171.45	4.086	103.79	3.797	96.45	108.67	483.38	40.80	7.14
C1058-148-7000-M	1.058	26.87	0.148	3.76	7.000	177.80	4.233	107.52	3.932	99.88	108.67	483.38	39.28	6.87
C1058-148-7500-M	1.058	26.87	0.148	3.76	7.500	190.50	4.527	114.98	4.202	106.74	108.67	483.38	36.55	6.40
C1058-148-8000-M	1.058	26.87	0.148	3.76	8.000	203.20	4.820	122.44	4.472	113.60	108.67	483.38	34.18	5.98
C1058-148-8500-M	1.058	26.87	0.148	3.76	8.500	215.90	5.114	129.90	4.742	120.46	108.67	483.38	32.09	5.62
C1058-148-9000-M	1.058	26.87	0.148	3.76	9.000	228.60	5.408	137.36	5.012	127.32	108.67	483.38	30.25	5.29
C1058-148-9500-M	1.058	26.87	0.148	3.76	9.500	241.30	5.701	144.81	5.283	134.18	108.67	483.38	28.61	5.01
C1058-162-1500-M	1.058	26.87	0.162	4.12	1.500	38.10	1.077	27.36	1.053	26.73	139.03	618.42	328.69	57.52
C1058-162-1625-M	1.058	26.87	0.162	4.12	1.625	41.28	1.157	29.39	1.128	28.66	139.03	618.42	297.11	51.99
C1058-162-1750-M	1.058	26.87	0.162	4.12	1.750	44.45	1.237	31.42	1.204	30.58	139.03	618.42	271.06	47.44
C1058-162-1875-M	1.058	26.87	0.162	4.12	1.875	47.63	1.317	33.46	1.280	32.50	139.03	618.42	249.22	43.61
C1058-162-2000-M	1.058	26.87	0.162	4.12	2.000	50.80	1.397	35.49	1.355	34.43	139.03	618.42	230.63	40.36
C1058-162-2125-M	1.058	26.87	0.162	4.12	2.125	53.98	1.477	37.52	1.431	36.35	139.03	618.42	214.62	37.56
C1058-162-2250-M	1.058	26.87	0.162	4.12	2.250	57.15	1.557	39.55	1.507	38.27	139.03	618.42	200.69	35.12
C1058-162-2375-M	1.058	26.87	0.162	4.12	2.375	60.33	1.637	41.59	1.582	40.20	139.03	618.42	188.46	32.98
C1058-162-2500-M	1.058	26.87	0.162	4.12	2.500	63.50	1.717	43.62	1.658	42.12	139.03	618.42	177.64	31.09
C1058-162-2625-M	1.058	26.87	0.162	4.12	2.625	66.68	1.797	45.65	1.734	44.04	139.03	618.42	167.99	29.40
C1058-162-2750-M	1.058	26.87	0.162	4.12	2.750	69.85	1.877	47.69	1.810	45.96	139.03	618.42	159.33	27.88
C1058-162-2875-M	1.058	26.87	0.162	4.12	2.875	73.03	1.957	49.72	1.885	47.89	139.03	618.42	151.52	26.52
C1058-162-3000-M	1.058	26.87	0.162	4.12	3.000	76.20	2.038	51.75	1.961	49.81	139.03	618.42	144.45	25.28
C1058-162-3250-M	1.058	26.87	0.162	4.12	3.250	82.55	2.198	55.82	2.112	53.66	139.03	618.42	132.10	23.12
C1058-162-3500-M	1.058	26.87	0.162	4.12	3.500	88.90	2.358	59.89	2.264	57.50	139.03	618.42	121.71	21.30
C1058-162-3750-M	1.058	26.87	0.162	4.12	3.750	95.25	2.518	63.95	2.415	61.35	139.03	618.42	112.83	19.74
C1058-162-4000-M	1.058	26.87	0.162	4.12	4.000	101.60	2.678	68.02	2.567	65.20	139.03	618.42	105.15	18.40
C1058-162-4250-M	1.058	26.87	0.162	4.12	4.250	107.95	2.838	72.08	2.718	69.04	139.03	618.42	98.46	17.23
C1058-162-4500-M	1.058	26.87	0.162	4.12	4.500	114.30	2.998	76.15	2.870	72.89	139.03	618.42	92.56	16.20
C1058-162-4750-M	1.058	26.87	0.162	4.12	4.750	120.65	3.158	80.22	3.021	76.73	139.03	618.42	87.33	15.28
C1058-162-5000-M	1.058	26.87	0.162	4.12	5.000	127.00	3.318	84.28	3.172	80.58	139.03	618.42	82.66	14.47
C1058-162-5250-M	1.058	26.87	0.162	4.12	5.250	133.35	3.478	88.35	3.324	84.43	139.03	618.42	78.47	13.73
C1058-162-5500-M	1.058	26.87	0.162	4.12	5.500	139.70	3.638	92.41	3.475	88.27	139.03	618.42	74.68	13.07
C1058-162-5750-M	1.058	26.87	0.162	4.12	5.750	146.05	3.798	96.48	3.627	92.12	139.03	618.42	71.24	12.47
C1058-162-6000-M	1.058	26.87	0.162	4.12	6.000	152.40	3.959	100.55	3.778	95.97	139.03	618.42	68.10	11.92
C1058-162-6250-M	1.058	26.87	0.162	4.12	6.250	158.75	4.119	104.61	3.930	99.81	139.03	618.42	65.23	11.41
C1058-162-6500-M	1.058	26.87	0.162	4.12	6.500	165.10	4.279	108.68	4.081	103.66	139.03	618.42	62.59	10.95
C1058-162-6750-M	1.058	26.87	0.162	4.12	6.750	171.45	4.439	112.74	4.232	107.50	139.03	618.42	60.15	10.53
C1058-162-7000-M	1.058	26.87	0.162	4.12	7.000	177.80	4.599	116.81	4.384	111.35	139.03	618.42	57.90	10.13
C1058-162-7500-M	1.058	26.87	0.162	4.12	7.500	190.50	4.919	124.94	4.687	119.04	139.03	618.42	53.87	9.43
C1058-162-8000-M	1.058	26.87	0.162	4.12	8.000	203.20	5.239	133.07	4.990	126.73	139.03	618.42	50.36	8.81
C1058-162-8500-M	1.058	26.87	0.162	4.12	8.500	215.90	5.559	141.21	5.292	134.43	139.03	618.42	47.28	8.27
C1058-162-9000-M	1.058	26.87	0.162	4.12	9.000	228.60	5.879	149.34	5.595	142.12	139.03	618.42	44.55	7.80

STAINLESS STEEL						
Catalog #	Load Length (L_1)		Load (P) at L_1		Spring Rate (R)	
	in	mm	lb	N	lb/in	N/mm
C1058-148-1875-S	1.313	33.34	81.55	362.77	145.00	25.38
C1058-148-2000-S	1.393	35.38	81.55	362.77	134.36	23.51
C1058-148-2125-S	1.474	37.43	81.55	362.77	125.18	21.91
C1058-148-2250-S	1.554	39.47	81.55	362.77	117.17	20.51
C1058-148-2375-S	1.634	41.52	81.55	362.77	110.13	19.27
C1058-148-2500-S	1.715	43.56	81.55	362.77	103.88	18.18
C1058-148-2625-S	1.795	45.60	81.55	362.77	98.31	17.20
C1058-148-2750-S	1.876	47.65	81.55	362.77	93.30	16.33
C1058-148-2875-S	1.956	49.69	81.55	362.77	88.78	15.54
C1058-148-3000-S	2.037	51.74	81.55	362.77	84.67	14.82
C1058-148-3250-S	2.198	55.82	81.55	362.77	77.51	13.56
C1058-148-3500-S	2.359	59.91	81.55	362.77	71.46	12.51
C1058-148-3750-S	2.520	64.00	81.55	362.77	66.29	11.60
C1058-148-4000-S	2.681	68.09	81.55	362.77	61.81	10.82
C1058-148-4250-S	2.842	72.18	81.55	362.77	57.91	10.13
C1058-148-4500-S	3.003	76.26	81.55	362.77	54.46	9.53
C1058-148-4750-S	3.163	80.35	81.55	362.77	51.41	9.00
C1058-148-5000-S	3.324	84.44	81.55	362.77	48.67	8.52
C1058-148-5250-S	3.485	88.53	81.55	362.77	46.22	8.09
C1058-148-5500-S	3.646	92.62	81.55	362.77	44.00	7.70
C1058-148-5750-S	3.807	96.70	81.55	362.77	41.98	7.35
C1058-148-6000-S	3.968	100.79	81.55	362.77	40.14	7.02
C1058-148-6250-S	4.129	104.88	81.55	362.77	38.45	6.73
C1058-148-6500-S	4.290	108.97	81.55	362.77	36.91	6.46
C1058-148-6750-S	4.451	113.06	81.55	362.77	35.48	6.21
C1058-148-7000-S	4.612	117.15	81.55	362.77	34.15	5.98
C1058-148-7500-S	4.934	125.32	81.55	362.77	31.78	5.56
C1058-148-8000-S	5.256	133.50	81.55	362.77	29.72	5.20
C1058-148-8500-S	5.578	141.67	81.55	362.77	27.91	4.88
C1058-148-9000-S	5.900	149.85	81.55	362.77	26.31	4.60
C1058-148-9500-S	6.222	158.03	81.55	362.77	24.88	4.35
C1058-162-1500-S	1.139	28.93	103.22	459.16	285.82	50.02
C1058-162-1625-S	1.225	31.13	103.22	459.16	258.35	45.21
C1058-162-1750-S	1.312	33.33	103.22	459.16	235.71	41.25
C1058-162-1875-S	1.399	35.53	103.22	459.16	216.71	37.92
C1058-162-2000-S	1.485	37.73	103.22	459.16	200.55	35.10
C1058-162-2125-S	1.572	39.93	103.22	459.16	186.63	32.66
C1058-162-2250-S	1.659	42.13	103.22	459.16	174.52	30.54
C1058-162-2375-S	1.745	44.33	103.22	459.16	163.88	28.68
C1058-162-2500-S	1.832	46.53	103.22	459.16	154.47	27.03
C1058-162-2625-S	1.918	48.73	103.22	459.16	146.08	25.56
C1058-162-2750-S	2.005	50.93	103.22	459.16	138.55	24.25
C1058-162-2875-S	2.092	53.13	103.22	459.16	131.76	23.06
C1058-162-3000-S	2.178	55.33	103.22	459.16	125.61	21.98
C1058-162-3250-S	2.351	59.73	103.22	459.16	114.87	20.10
C1058-162-3500-S	2.525	64.13	103.22	459.16	105.83	18.52
C1058-162-3750-S	2.698	68.53	103.22	459.16	98.11	17.17
C1058-162-4000-S	2.871	72.93	103.22	459.16	91.44	16.00
C1058-162-4250-S	3.044	77.33	103.22	459.16	85.61	14.98
C1058-162-4500-S	3.218	81.73	103.22	459.16	80.49	14.09
C1058-162-4750-S	3.391	86.13	103.22	459.16	75.94	13.29
C1058-162-5000-S	3.564	90.53	103.22	459.16	71.88	12.58
C1058-162-5250-S	3.737	94.93	103.22	459.16	68.23	11.94
C1058-162-5500-S	3.910	99.33	103.22	459.16	64.94	11.36
C1058-162-5750-S	4.084	103.73	103.22	459.16	61.95	10.84
C1058-162-6000-S	4.257	108.13	103.22	459.16	59.22	10.36
C1058-162-6250-S	4.430	112.52	103.22	459.16	56.72	9.93
C1058-162-6500-S	4.603	116.92	103.22	459.16	54.42	9.52
C1058-162-6750-S	4.777	121.32	103.22	459.16	52.31	9.15
C1058-162-7000-S	4.950	125.72	103.22	459.16	50.35	8.81
C1058-162-7500-S	5.296	134.52	103.22	459.16	46.84	8.20
C1058-162-8000-S	5.643	143.32	103.22	459.16	43.79	7.66
C1058-162-8500-S	5.989	152.12	103.22	459.16	41.11	7.19
C1058-162-9000-S	6.336	160.92	103.22	459.16	38.74	6.78

FOR INFORMATION ON ALTERNATIVE FINISHES, SEE PAGE 311

Part Numbers with an "*" are squared and not ground. **Part Numbers in bold** represent the newly expanded Associated Spring RAYMOND compression spring offering.

MUSIC WIRE															STAINLESS STEEL					
Catalog #	Outside Diameter (OD)		Wire Diameter (d)		Free Length (L) Approx		Load Length (L_1)		Solid Height (Sh) Approx		Load (P) at L_1		Spring Rate (R)		Catalog #	Load Length (L_1)		Load (P) at L_1		Spring Rate (R)	
	in	mm	in	mm	in	mm	in	mm	in	mm	lb	N	lb/in	N/mm		in	mm	lb	N	lb/in	N/mm
C1058-162-9500-M	1.058	26.87	0.162	4.12	9.500	241.30	6.200	157.47	5.898	149.81	139.03	618.42	42.13	7.37	**C1058-162-9500-S**	6.682	169.72	103.22	459.16	36.63	6.41
C1058-177-1500-M	1.058	26.87	0.177	4.50	1.500	38.10	1.147	29.12	1.138	28.92	176.72	786.07	500.10	87.52	**C1058-177-1500-S**	1.202	30.52	129.70	576.93	434.87	76.10
C1058-177-1625-M	1.058	26.87	0.177	4.50	1.625	41.28	1.233	31.32	1.222	31.04	176.72	786.07	450.92	78.91	**C1058-177-1625-S**	1.294	32.87	129.70	576.93	392.10	68.62
C1058-177-1750-M	1.058	26.87	0.177	4.50	1.750	44.45	1.320	33.52	1.306	33.17	176.72	786.07	410.54	71.84	**C1058-177-1750-S**	1.387	35.22	129.70	576.93	356.99	62.47
C1058-177-1875-M	1.058	26.87	0.177	4.50	1.875	47.63	1.406	35.71	1.389	35.29	176.72	786.07	376.80	65.94	**C1058-177-1875-S**	1.479	37.57	129.70	576.93	327.65	57.34
C1058-177-2000-M	1.058	26.87	0.177	4.50	2.000	50.80	1.492	37.91	1.473	37.42	176.72	786.07	348.19	60.93	**C1058-177-2000-S**	1.572	39.92	129.70	576.93	302.77	52.98
C1058-177-2125-M	1.058	26.87	0.177	4.50	2.125	53.98	1.579	40.10	1.557	39.54	176.72	786.07	323.61	56.63	**C1058-177-2125-S**	1.664	42.27	129.70	576.93	281.40	49.25
C1058-177-2250-M	1.058	26.87	0.177	4.50	2.250	57.15	1.665	42.30	1.640	41.66	176.72	786.07	302.28	52.90	**C1058-177-2250-S**	1.757	44.62	129.70	576.93	262.85	46.00
C1058-177-2375-M	1.058	26.87	0.177	4.50	2.375	60.33	1.752	44.50	1.724	43.79	176.72	786.07	283.58	49.63	**C1058-177-2375-S**	1.849	46.97	129.70	576.93	246.59	43.15
C1058-177-2500-M	1.058	26.87	0.177	4.50	2.500	63.50	1.838	46.69	1.808	45.91	176.72	786.07	267.06	46.74	**C1058-177-2500-S**	1.941	49.31	129.70	576.93	232.23	40.64
C1058-177-2625-M	1.058	26.87	0.177	4.50	2.625	66.68	1.925	48.89	1.891	48.04	176.72	786.07	252.36	44.16	**C1058-177-2625-S**	2.034	51.66	129.70	576.93	219.45	38.40
C1058-177-2750-M	1.058	26.87	0.177	4.50	2.750	69.85	2.011	51.08	1.975	50.16	176.72	786.07	239.20	41.86	**C1058-177-2750-S**	2.126	54.01	129.70	576.93	208.00	36.40
C1058-177-2875-M	1.058	26.87	0.177	4.50	2.875	73.03	2.098	53.28	2.059	52.29	176.72	786.07	227.34	39.78	**C1058-177-2875-S**	2.219	56.36	129.70	576.93	197.68	34.59
C1058-177-3000-M	1.058	26.87	0.177	4.50	3.000	76.20	2.184	55.48	2.142	54.41	176.72	786.07	216.60	37.90	**C1058-177-3000-S**	2.311	58.71	129.70	576.93	188.34	32.96
C1058-177-3250-M	1.058	26.87	0.177	4.50	3.250	82.55	2.357	59.87	2.309	58.66	176.72	786.07	197.90	34.63	**C1058-177-3250-S**	2.496	63.41	129.70	576.93	172.09	30.11
C1058-177-3500-M	1.058	26.87	0.177	4.50	3.500	88.90	2.530	64.26	2.477	62.91	176.72	786.07	182.17	31.88	**C1058-177-3500-S**	2.681	68.10	129.70	576.93	158.41	27.72
C1058-177-3750-M	1.058	26.87	0.177	4.50	3.750	95.25	2.703	68.65	2.644	67.16	176.72	786.07	168.76	29.53	**C1058-177-3750-S**	2.866	72.80	129.70	576.93	146.75	25.68
C1058-177-4000-M	1.058	26.87	0.177	4.50	4.000	101.60	2.876	73.04	2.811	71.41	176.72	786.07	157.19	27.51	**C1058-177-4000-S**	3.051	77.50	129.70	576.93	136.69	23.92
C1058-177-4250-M	1.058	26.87	0.177	4.50	4.250	107.95	3.049	77.44	2.979	75.65	176.72	786.07	147.10	25.74	**C1058-177-4250-S**	3.236	82.20	129.70	576.93	127.92	22.39
C1058-177-4500-M	1.058	26.87	0.177	4.50	4.500	114.30	3.222	81.83	3.146	79.90	176.72	786.07	138.23	24.19	**C1058-177-4500-S**	3.421	86.89	129.70	576.93	120.20	21.04
C1058-177-4750-M	1.058	26.87	0.177	4.50	4.750	120.65	3.395	86.22	3.313	84.15	176.72	786.07	130.37	22.82	**C1058-177-4750-S**	3.606	91.59	129.70	576.93	113.37	19.84
C1058-177-5000-M	1.058	26.87	0.177	4.50	5.000	127.00	3.567	90.61	3.480	88.40	176.72	786.07	123.36	21.59	**C1058-177-5000-S**	3.791	96.29	129.70	576.93	107.27	18.77
C1058-177-5250-M	1.058	26.87	0.177	4.50	5.250	133.35	3.740	95.01	3.648	92.65	176.72	786.07	117.06	20.48	**C1058-177-5250-S**	3.976	100.99	129.70	576.93	101.79	17.81
C1058-177-5500-M	1.058	26.87	0.177	4.50	5.500	139.70	3.913	99.40	3.815	96.90	176.72	786.07	111.37	19.49	**C1058-177-5500-S**	4.161	105.68	129.70	576.93	96.84	16.95
C1058-177-5750-M	1.058	26.87	0.177	4.50	5.750	146.05	4.086	103.79	3.982	101.15	176.72	786.07	106.21	18.59	**C1058-177-5750-S**	4.346	110.38	129.70	576.93	92.36	16.16
C1058-177-6000-M	1.058	26.87	0.177	4.50	6.000	152.40	4.259	108.18	4.149	105.40	176.72	786.07	101.51	17.76	**C1058-177-6000-S**	4.531	115.08	129.70	576.93	88.27	15.45
C1058-177-6250-M	1.058	26.87	0.177	4.50	6.250	158.75	4.432	112.57	4.317	109.65	176.72	786.07	97.20	17.01	**C1058-177-6250-S**	4.716	119.77	129.70	576.93	84.53	14.79
C1058-177-6500-M	1.058	26.87	0.177	4.50	6.500	165.10	4.605	116.97	4.484	113.89	176.72	786.07	93.25	16.32	**C1058-177-6500-S**	4.900	124.47	129.70	576.93	81.09	14.19
C1058-177-6750-M	1.058	26.87	0.177	4.50	6.750	171.45	4.778	121.36	4.651	118.14	176.72	786.07	89.61	15.68	**C1058-177-6750-S**	5.085	129.17	129.70	576.93	77.92	13.64
C1058-177-7000-M	1.058	26.87	0.177	4.50	7.000	177.80	4.951	125.75	4.819	122.39	176.72	786.07	86.23	15.09	**C1058-177-7000-S**	5.270	133.87	129.70	576.93	74.99	13.12
C1058-177-7500-M	1.058	26.87	0.177	4.50	7.500	190.50	5.297	134.53	5.153	130.89	176.72	786.07	80.20	14.04	**C1058-177-7500-S**	5.640	143.26	129.70	576.93	69.74	12.20
C1058-177-8000-M	1.058	26.87	0.177	4.50	8.000	203.20	5.642	143.32	5.488	139.39	176.72	786.07	74.96	13.12	**C1058-177-8000-S**	6.010	152.66	129.70	576.93	65.18	11.41
C1058-177-8500-M	1.058	26.87	0.177	4.50	8.500	215.90	5.988	152.10	5.822	147.88	176.72	786.07	70.36	12.31	**C1058-177-8500-S**	6.380	162.05	129.70	576.93	61.18	10.71
C1058-177-9000-M	1.058	26.87	0.177	4.50	9.000	228.60	6.334	160.89	6.157	156.38	176.72	786.07	66.29	11.60	**C1058-177-9000-S**	6.750	171.45	129.70	576.93	57.64	10.09
C1058-177-9500-M	1.058	26.87	0.177	4.50	9.500	241.30	6.680	169.67	6.491	164.88	176.72	786.07	62.66	10.97	**C1058-177-9500-S**	7.120	180.84	129.70	576.93	54.49	9.54
C1058-192-1500-M	1.058	26.87	0.192	4.88	1.500	38.10	1.256	31.89	1.212	30.80	183.15	814.69	749.32	131.13	**C1058-192-1500-S**	1.255	31.88	159.57	709.78	651.59	114.03
C1058-192-1625-M	1.058	26.87	0.192	4.88	1.625	41.28	1.351	34.32	1.303	33.10	184.38	820.17	673.85	117.92	**C1058-192-1625-S**	1.353	34.36	159.57	709.78	585.95	102.54
C1058-192-1750-M	1.058	26.87	0.192	4.88	1.750	44.45	1.447	36.76	1.394	35.40	185.39	824.65	612.19	107.13	**C1058-192-1750-S**	1.450	36.84	159.57	709.78	532.33	93.16
C1058-192-1875-M	1.058	26.87	0.192	4.88	1.875	47.63	1.543	39.19	1.484	37.70	186.23	828.37	560.86	98.15	**C1058-192-1875-S**	1.548	39.31	159.57	709.78	487.71	85.35
C1058-192-2000-M	1.058	26.87	0.192	4.88	2.000	50.80	1.639	41.62	1.575	40.01	186.93	831.52	517.48	90.56	**C1058-192-2000-S**	1.645	41.79	159.57	709.78	449.98	78.75
C1058-192-2125-M	1.058	26.87	0.192	4.88	2.125	53.98	1.667	42.35	1.666	42.31	219.92	978.27	480.32	84.06	**C1058-192-2125-S**	1.743	44.27	159.57	709.78	417.67	73.09
C1058-192-2250-M	1.058	26.87	0.192	4.88	2.250	57.15	1.759	44.69	1.756	44.61	219.92	978.27	448.15	78.43	**C1058-192-2250-S**	1.841	46.75	159.57	709.78	389.69	68.20
C1058-192-2375-M	1.058	26.87	0.192	4.88	2.375	60.33	1.851	47.03	1.847	46.91	219.92	978.27	420.01	73.50	**C1058-192-2375-S**	1.938	49.23	159.57	709.78	365.23	63.91
C1058-192-2500-M	1.058	26.87	0.192	4.88	2.500	63.50	1.944	49.37	1.938	49.21	219.92	978.27	395.20	69.16	**C1058-192-2500-S**	2.036	51.71	159.57	709.78	343.65	60.14
C1058-192-2625-M	1.058	26.87	0.192	4.88	2.625	66.68	2.036	51.71	2.028	51.52	219.92	978.27	373.16	65.30	**C1058-192-2625-S**	2.133	54.18	159.57	709.78	324.48	56.78
C1058-192-2750-M	1.058	26.87	0.192	4.88	2.750	69.85	2.128	54.05	2.119	53.82	219.92	978.27	353.44	61.85	**C1058-192-2750-S**	2.231	56.66	159.57	709.78	307.34	53.78
C1058-192-2875-M	1.058	26.87	0.192	4.88	2.875	73.03	2.220	56.39	2.210	56.12	219.92	978.27	335.71	58.75	**C1058-192-2875-S**	2.328	59.14	159.57	709.78	291.92	51.09
C1058-192-3000-M	1.058	26.87	0.192	4.88	3.000	76.20	2.312	58.73	2.300	58.42	219.92	978.27	319.67	55.94	**C1058-192-3000-S**	2.426	61.62	159.57	709.78	277.97	48.64
C1058-192-3250-M	1.058	26.87	0.192	4.88	3.250	82.55	2.496	63.41	2.481	63.03	219.92	978.27	291.78	51.06	**C1058-192-3250-S**	2.621	66.58	159.57	709.78	253.72	44.40
C1058-192-3500-M	1.058	26.87	0.192	4.88	3.500	88.90	2.681	68.09	2.663	67.63	219.92	978.27	268.37	46.96	**C1058-192-3500-S**	2.816	71.53	159.57	709.78	233.37	40.84
C1058-192-3750-M	1.058	26.87	0.192	4.88	3.750	95.25	2.865	72.77	2.844	72.24	219.92	978.27	248.44	43.48	**C1058-192-3750-S**	3.011	76.49	159.57	709.78	216.03	37.81
C1058-192-4000-M	1.058	26.87	0.192	4.88	4.000	101.60	3.049	77.45	3.025	76.84	219.92	978.27	231.26	40.47	**C1058-192-4000-S**	3.207	81.45	159.57	709.78	201.10	35.19
C1058-192-4250-M	1.058	26.87	0.192	4.88	4.250	107.95	3.233	82.13	3.207	81.45	219.92	978.27	216.31	37.85	**C1058-192-4250-S**	3.402	86.40	159.57	709.78	188.09	32.92
C1058-192-4500-M	1.058	26.87	0.192	4.88	4.500	114.30	3.418	86.81	3.388	86.05	219.92	978.27	203.17	35.55	**C1058-192-4500-S**	3.597	91.36	159.57	709.78	176.67	30.92
C1058-192-4750-M	1.058	26.87	0.192	4.88	4.750	120.65	3.602	91.49	3.569	90.66	219.92	978.27	191.54	33.52	**C1058-192-4750-S**	3.792	96.32	159.57	709.78	166.55	29.15
C1058-192-5000-M	1.058	26.87	0.192	4.88	5.000	127.00	3.786	96.17	3.750	95.26	219.92	978.27	181.16	31.70	**C1058-192-5000-S**	3.987	101.27	159.57	709.78	157.53	27.57
C1058-192-5250-M	1.058	26.87	0.192	4.88	5.250	133.35	3.970	100.85	3.932	99.86	219.92	978.27	171.86	30.07	**C1058-192-5250-S**	4.182	106.23	159.57	709.78	149.44	26.15
C1058-192-5500-M	1.058	26.87	0.192	4.88	5.500	139.70	4.155	105.53	4.113	104.47	219.92	978.27	163.46	28.60	**C1058-192-5500-S**	4.377	111.19	159.57	709.78	142.14	24.87
C1058-192-5750-M	1.058	26.87	0.192	4.88	5.750	146.05	4.339	110.21	4.294	109.07	219.92	978.27	155.84	27.27	**C1058-192-5750-S**	4.573	116.14	159.57	709.78	135.51	23.71
C1058-192-6000-M	1.058	26.87	0.192	4.88	6.000	152.40	4.523	114.89	4.476	113.68	219.92	978.27	148.90	26.06	**C1058-192-6000-S**	4.768	121.10	159.57	709.78	129.48	22.66
C1058-192-6250-M	1.058	26.87	0.192	4.88	6.250	158.75	4.707	119.57	4.657	118.28	219.92	978.27	142.56	24.95	**C1058-192-6250-S**	4.963	126.06	159.57	709.78	123.96	21.69
C1058-192-6500-M	1.058	26.87	0.192	4.88	6.500	165.10	4.892	124.25	4.838	122.89	219.92	978.27	136.73	23.93	**C1058-192-6500-S**	5.158	131.01	159.57	709.78	118.90	20.81
C1058-192-6750-M	1.058	26.87	0.192	4.88	6.750	171.45	5.076	128.93	5.019	127.49	219.92	978.27	131.36	22.99	**C1058-192-6750-S**	5.353	135.97	159.57	709.78	114.23	19.99
C1058-192-7000-M	1.058	26.87	0.192	4.88	7.000	177.80	5.260	133.61	5.201	132.10	219.92	978.27	126.40	22.12	**C1058-192-7000-S**	5.548	140.92	159.57	709.78	109.91	19.23

Part Numbers with an "*" are squared and not ground. **Part Numbers in bold** represent the newly expanded Associated Spring RAYMOND compression spring offering.

MUSIC WIRE															STAINLESS STEEL					
Catalog #	Outside Diameter (OD)		Wire Diameter (d)		Free Length (L) Approx		Load Length (L_1)		Solid Height (Sh) Approx		Load (P) at L_1		Spring Rate (R)		Catalog #	Load Length (L_1)		Load (P) at L_1		Spring Rate (R)	
	in	mm	in	mm	in	mm	in	mm	in	mm	lb	N	lb/in	N/mm		in	mm	lb	N	lb/in	N/mm
C1058-192-7500-M	**1.058**	**26.87**	**0.192**	**4.88**	**7.500**	**190.50**	**5.629**	**142.97**	**5.563**	**141.31**	**219.92**	**978.27**	**117.52**	**20.57**	**C1058-192-7500-S**	**5.939**	**150.84**	**159.57**	**709.78**	**102.19**	**17.88**
C1058-192-8000-M	**1.058**	**26.87**	**0.192**	**4.88**	**8.000**	**203.20**	**5.997**	**152.33**	**5.926**	**150.52**	**219.92**	**978.27**	**109.80**	**19.22**	**C1058-192-8000-S**	**6.329**	**160.75**	**159.57**	**709.78**	**95.48**	**16.71**
C1058-192-8500-M	**1.058**	**26.87**	**0.192**	**4.88**	**8.500**	**215.90**	**6.366**	**161.69**	**6.288**	**159.72**	**219.92**	**978.27**	**103.04**	**18.03**	**C1058-192-8500-S**	**6.719**	**170.66**	**159.57**	**709.78**	**89.60**	**15.68**
C1058-192-9000-M	**1.058**	**26.87**	**0.192**	**4.88**	**9.000**	**228.60**	**6.734**	**171.05**	**6.651**	**168.93**	**219.92**	**978.27**	**97.06**	**16.98**	**C1058-192-9000-S**	**7.109**	**180.58**	**159.57**	**709.78**	**84.40**	**14.77**
C1058-192-9500-M	**1.058**	**26.87**	**0.192**	**4.88**	**9.500**	**241.30**	**7.103**	**180.41**	**7.013**	**178.14**	**219.92**	**978.27**	**91.73**	**16.05**	**C1058-192-9500-S**	**7.500**	**190.49**	**159.57**	**709.78**	**79.77**	**13.96**
C1058-207-1625-M	**1.058**	**26.87**	**0.207**	**5.26**	**1.625**	**41.28**	**1.410**	**35.81**	**1.372**	**34.85**	**213.62**	**950.22**	**993.13**	**173.80**	**C1058-207-1625-S**	**1.402**	**35.60**	**192.79**	**857.57**	**863.59**	**151.13**
C1058-207-1750-M	**1.058**	**26.87**	**0.207**	**5.26**	**1.750**	**44.45**	**1.511**	**38.38**	**1.469**	**37.30**	**215.25**	**957.49**	**900.21**	**157.54**	**C1058-207-1750-S**	**1.504**	**38.19**	**192.79**	**857.57**	**782.79**	**136.99**
C1058-207-1875-M	**1.058**	**26.87**	**0.207**	**5.26**	**1.875**	**47.63**	**1.612**	**40.94**	**1.565**	**39.76**	**216.61**	**963.52**	**823.19**	**144.06**	**C1058-207-1875-S**	**1.606**	**40.78**	**192.79**	**857.57**	**715.82**	**125.27**
C1058-207-2000-M	**1.058**	**26.87**	**0.207**	**5.26**	**2.000**	**50.80**	**1.713**	**43.51**	**1.662**	**42.22**	**217.75**	**968.60**	**758.31**	**132.70**	**C1058-207-2000-S**	**1.708**	**43.37**	**192.79**	**857.57**	**659.40**	**115.40**
C1058-207-2125-M	**1.058**	**26.87**	**0.207**	**5.26**	**2.125**	**53.98**	**1.814**	**46.07**	**1.759**	**44.68**	**218.72**	**972.93**	**702.91**	**123.01**	**C1058-207-2125-S**	**1.810**	**45.96**	**192.79**	**857.57**	**611.23**	**106.96**
C1058-207-2250-M	**1.058**	**26.87**	**0.207**	**5.26**	**2.250**	**57.15**	**1.915**	**48.64**	**1.856**	**47.13**	**219.57**	**976.68**	**655.06**	**114.63**	**C1058-207-2250-S**	**1.912**	**48.55**	**192.79**	**857.57**	**569.61**	**99.68**
C1058-207-2375-M	**1.058**	**26.87**	**0.207**	**5.26**	**2.375**	**60.33**	**2.016**	**51.20**	**1.952**	**49.59**	**220.30**	**979.95**	**613.30**	**107.33**	**C1058-207-2375-S**	**2.013**	**51.14**	**192.79**	**857.57**	**533.30**	**93.33**
C1058-207-2500-M	**1.058**	**26.87**	**0.207**	**5.26**	**2.500**	**63.50**	**2.117**	**53.77**	**2.049**	**52.05**	**220.95**	**982.82**	**576.55**	**100.90**	**C1058-207-2500-S**	**2.115**	**53.73**	**192.79**	**857.57**	**501.35**	**87.74**
C1058-207-2625-M	**1.058**	**26.87**	**0.207**	**5.26**	**2.625**	**66.68**	**2.218**	**56.33**	**2.146**	**54.51**	**221.52**	**985.37**	**543.95**	**95.19**	**C1058-207-2625-S**	**2.217**	**56.32**	**192.79**	**857.57**	**473.00**	**82.78**
C1058-207-2750-M	**1.058**	**26.87**	**0.207**	**5.26**	**2.750**	**69.85**	**2.319**	**58.90**	**2.243**	**56.96**	**222.03**	**987.65**	**514.85**	**90.10**	**C1058-207-2750-S**	**2.319**	**58.91**	**192.79**	**857.57**	**447.69**	**78.35**
C1058-207-2875-M	**1.058**	**26.87**	**0.207**	**5.26**	**2.875**	**73.03**	**2.420**	**61.46**	**2.339**	**59.42**	**222.49**	**989.70**	**488.70**	**85.52**	**C1058-207-2875-S**	**2.421**	**61.50**	**192.79**	**857.57**	**424.95**	**74.37**
C1058-207-3000-M	**1.058**	**26.87**	**0.207**	**5.26**	**3.000**	**76.20**	**2.521**	**64.03**	**2.436**	**61.88**	**222.91**	**991.55**	**465.07**	**81.39**	**C1058-207-3000-S**	**2.523**	**64.09**	**192.79**	**857.57**	**404.41**	**70.77**
C1058-207-3250-M	**1.058**	**26.87**	**0.207**	**5.26**	**3.250**	**82.55**	**2.723**	**69.16**	**2.630**	**66.79**	**223.63**	**994.76**	**424.08**	**74.21**	**C1058-207-3250-S**	**2.727**	**69.27**	**192.79**	**857.57**	**368.76**	**64.53**
C1058-207-3500-M	**1.058**	**26.87**	**0.207**	**5.26**	**3.500**	**88.90**	**2.925**	**74.29**	**2.823**	**71.71**	**224.23**	**997.44**	**389.72**	**68.20**	**C1058-207-3500-S**	**2.931**	**74.45**	**192.79**	**857.57**	**338.89**	**59.31**
C1058-207-3750-M	**1.058**	**26.87**	**0.207**	**5.26**	**3.750**	**95.25**	**3.127**	**79.42**	**3.017**	**76.62**	**224.75**	**999.73**	**360.52**	**63.09**	**C1058-207-3750-S**	**3.135**	**79.63**	**192.79**	**857.57**	**313.49**	**54.86**
C1058-207-4000-M	**1.058**	**26.87**	**0.207**	**5.26**	**4.000**	**101.60**	**3.329**	**84.55**	**3.210**	**81.54**	**225.19**	**1001.70**	**335.38**	**58.69**	**C1058-207-4000-S**	**3.339**	**84.81**	**192.79**	**857.57**	**291.64**	**51.04**
C1058-207-4250-M	**1.058**	**26.87**	**0.207**	**5.26**	**4.250**	**107.95**	**3.531**	**89.68**	**3.404**	**86.45**	**225.58**	**1003.41**	**313.53**	**54.87**	**C1058-207-4250-S**	**3.543**	**89.99**	**192.79**	**857.57**	**272.63**	**47.71**
C1058-207-4500-M	**1.058**	**26.87**	**0.207**	**5.26**	**4.500**	**114.30**	**3.732**	**94.81**	**3.597**	**91.36**	**225.91**	**1004.91**	**294.34**	**51.51**	**C1058-207-4500-S**	**3.747**	**95.17**	**192.79**	**857.57**	**255.95**	**44.79**
C1058-207-4750-M	**1.058**	**26.87**	**0.207**	**5.26**	**4.750**	**120.65**	**3.934**	**99.93**	**3.791**	**96.28**	**226.21**	**1006.24**	**277.37**	**48.54**	**C1058-207-4750-S**	**3.951**	**100.35**	**192.79**	**857.57**	**241.19**	**42.21**
C1058-207-5000-M	**1.058**	**26.87**	**0.207**	**5.26**	**5.000**	**127.00**	**4.136**	**105.06**	**3.984**	**101.19**	**226.48**	**1007.42**	**262.25**	**45.89**	**C1058-207-5000-S**	**4.155**	**105.53**	**192.79**	**857.57**	**228.04**	**39.91**
C1058-207-5250-M	**1.058**	**26.87**	**0.207**	**5.26**	**5.250**	**133.35**	**4.338**	**110.19**	**4.177**	**106.11**	**226.72**	**1008.48**	**248.69**	**43.52**	**C1058-207-5250-S**	**4.359**	**110.71**	**192.79**	**857.57**	**216.26**	**37.84**
C1058-207-5500-M	**1.058**	**26.87**	**0.207**	**5.26**	**5.500**	**139.70**	**4.540**	**115.32**	**4.371**	**111.02**	**226.93**	**1009.44**	**236.47**	**41.38**	**C1058-207-5500-S**	**4.562**	**115.89**	**192.79**	**857.57**	**205.63**	**35.98**
C1058-207-5750-M	**1.058**	**26.87**	**0.207**	**5.26**	**5.750**	**146.05**	**4.742**	**120.45**	**4.564**	**115.94**	**227.13**	**1010.31**	**225.39**	**39.44**	**C1058-207-5750-S**	**4.766**	**121.06**	**192.79**	**857.57**	**195.99**	**34.30**
C1058-207-6000-M	**1.058**	**26.87**	**0.207**	**5.26**	**6.000**	**152.40**	**4.944**	**125.58**	**4.758**	**120.85**	**227.30**	**1011.10**	**215.30**	**37.68**	**C1058-207-6000-S**	**4.970**	**126.24**	**192.79**	**857.57**	**187.22**	**32.76**
C1058-207-6250-M	**1.058**	**26.87**	**0.207**	**5.26**	**6.250**	**158.75**	**5.146**	**130.71**	**4.951**	**125.77**	**227.47**	**1011.82**	**206.08**	**36.06**	**C1058-207-6250-S**	**5.174**	**131.42**	**192.79**	**857.57**	**179.20**	**31.36**
C1058-207-6500-M	**1.058**	**26.87**	**0.207**	**5.26**	**6.500**	**165.10**	**5.348**	**135.84**	**5.145**	**130.68**	**227.61**	**1012.48**	**197.61**	**34.58**	**C1058-207-6500-S**	**5.378**	**136.60**	**192.79**	**857.57**	**171.84**	**30.07**
C1058-207-6750-M	**1.058**	**26.87**	**0.207**	**5.26**	**6.750**	**171.45**	**5.550**	**140.97**	**5.338**	**135.60**	**227.75**	**1013.09**	**189.82**	**33.22**	**C1058-207-6750-S**	**5.582**	**141.78**	**192.79**	**857.57**	**165.06**	**28.89**
C1058-207-7000-M	**1.058**	**26.87**	**0.207**	**5.26**	**7.000**	**177.80**	**5.752**	**146.10**	**5.532**	**140.51**	**227.88**	**1013.65**	**182.61**	**31.96**	**C1058-207-7000-S**	**5.786**	**146.96**	**192.79**	**857.57**	**158.79**	**27.79**
C1058-207-7500-M	**1.058**	**26.87**	**0.207**	**5.26**	**7.500**	**190.50**	**6.156**	**156.36**	**5.919**	**150.34**	**228.11**	**1014.66**	**169.73**	**29.70**	**C1058-207-7500-S**	**6.194**	**157.32**	**192.79**	**857.57**	**147.59**	**25.83**
C1058-207-8000-M	**1.058**	**26.87**	**0.207**	**5.26**	**8.000**	**203.20**	**6.560**	**166.62**	**6.306**	**160.17**	**228.30**	**1015.54**	**158.54**	**27.74**	**C1058-207-8000-S**	**6.602**	**167.68**	**192.79**	**857.57**	**137.86**	**24.13**
C1058-207-8500-M	**1.058**	**26.87**	**0.207**	**5.26**	**8.500**	**215.90**	**6.693**	**170.00**	**6.693**	**170.00**	**268.77**	**1195.54**	**148.74**	**26.03**	**C1058-207-8500-S**	**7.009**	**178.04**	**192.79**	**857.57**	**129.34**	**22.63**
C1058-207-9000-M	**1.058**	**26.87**	**0.207**	**5.26**	**9.000**	**228.60**	**7.081**	**179.86**	**7.080**	**179.83**	**268.77**	**1195.54**	**140.08**	**24.51**	**C1058-207-9000-S**	**7.417**	**188.40**	**192.79**	**857.57**	**121.80**	**21.32**
C1058-207-9500-M	**1.058**	**26.87**	**0.207**	**5.26**	**9.500**	**241.30**	**7.470**	**189.73**	**7.467**	**189.66**	**268.77**	**1195.54**	**132.37**	**23.16**	**C1058-207-9500-S**	**7.825**	**198.76**	**192.79**	**857.57**	**115.10**	**20.14**
D12800	1.063	27.00	0.079	2.00	2.283	58.00	0.591	15.00	0.433	11.00	28.66	127.49	17.03	2.98	D22800	0.591	15.00	23.87	106.20	14.17	2.48
D12810	1.063	27.00	0.079	2.00	3.484	88.50	0.843	21.40	0.591	15.00	28.66	127.49	10.86	1.90	D22810	0.843	21.40	23.87	106.20	9.03	1.58
D12820	1.063	27.00	0.079	2.00	5.315	135.00	1.220	31.00	0.827	21.00	28.66	127.49	7.03	1.23	D22820	1.220	31.00	23.87	106.20	5.83	1.02
D12830	1.063	27.00	0.079	2.00	7.677	195.00	1.724	43.80	1.142	29.00	28.66	127.49	4.74	0.83	D22830	1.724	43.80	23.87	106.20	3.94	0.69
D12840	1.063	27.00	0.079	2.00	11.417	290.00	2.480	63.00	1.614	41.00	28.66	127.49	3.26	0.57	D22840	2.480	63.00	23.87	106.20	2.69	0.47
D13090	1.083	27.50	0.098	2.50	1.929	49.00	0.661	16.80	0.541	13.75	52.47	233.40	41.66	7.29	D23090	0.661	16.80	43.71	194.42	34.69	6.07
D13100	1.083	27.50	0.098	2.50	2.933	74.50	0.945	24.00	0.738	18.75	52.47	233.40	26.51	4.64	D23100	0.945	24.00	43.71	194.42	22.11	3.87
D13110	1.083	27.50	0.098	2.50	4.528	115.00	1.370	34.80	1.033	26.25	52.47	233.40	17.14	3.00	D23110	1.370	34.80	43.71	194.42	14.29	2.50
D13120	1.083	27.50	0.098	2.50	6.496	165.00	1.937	49.20	1.427	36.25	52.47	233.40	11.66	2.04	D23120	1.937	49.20	43.71	194.42	9.71	1.70
D13130	1.083	27.50	0.098	2.50	9.449	240.00	2.787	70.80	2.018	51.25	52.47	233.40	7.89	1.38	D23130	2.787	70.80	43.71	194.42	6.57	1.15
C1095-082-0875-M	**1.095**	**27.81**	**0.082**	**2.08**	**0.875**	**22.23**	**0.371**	**9.42**	**0.274**	**6.97**	**21.48**	**95.56**	**42.60**	**7.46**	**C1095-082-0875-S**	**0.420**	**10.66**	**16.15**	**71.84**	**35.49**	**6.21**
C1095-082-1000-M	**1.095**	**27.81**	**0.082**	**2.08**	**1.000**	**25.40**	**0.403**	**10.24**	**0.300**	**7.62**	**21.48**	**95.56**	**36.00**	**6.30**	**C1095-082-1000-S**	**0.461**	**11.72**	**16.15**	**71.84**	**29.99**	**5.25**
C1095-082-1250-M	**1.095**	**27.81**	**0.082**	**2.08**	**1.250**	**31.75**	**0.480**	**12.19**	**0.348**	**8.85**	**21.48**	**95.56**	**27.90**	**4.88**	**C1095-082-1250-S**	**0.555**	**14.10**	**16.15**	**71.84**	**23.24**	**4.07**
C1095-082-1500-M	**1.095**	**27.81**	**0.082**	**2.08**	**1.500**	**38.10**	**0.554**	**14.06**	**0.397**	**10.09**	**21.48**	**95.56**	**22.70**	**3.97**	**C1095-082-1500-S**	**0.646**	**16.41**	**16.15**	**71.84**	**18.91**	**3.31**
C1095-082-1750-M	**1.095**	**27.81**	**0.082**	**2.08**	**1.750**	**44.45**	**0.625**	**15.88**	**0.447**	**11.36**	**21.48**	**95.56**	**19.10**	**3.34**	**C1095-082-1750-S**	**0.735**	**18.67**	**16.15**	**71.84**	**15.91**	**2.78**
C1095-082-2000-M	**1.095**	**27.81**	**0.082**	**2.08**	**2.000**	**50.80**	**0.702**	**17.83**	**0.496**	**12.61**	**21.42**	**95.28**	**16.50**	**2.89**	**C1095-082-2000-S**	**0.825**	**20.95**	**16.15**	**71.84**	**13.75**	**2.41**
C1095-082-2500-M	**1.095**	**27.81**	**0.082**	**2.08**	**2.500**	**63.50**	**0.850**	**21.58**	**0.586**	**14.89**	**21.45**	**95.44**	**13.00**	**2.28**	**C1095-082-2500-S**	**1.009**	**25.62**	**16.15**	**71.84**	**10.83**	**1.90**
C1095-082-3000-M	**1.095**	**27.81**	**0.082**	**2.08**	**3.000**	**76.20**	**0.997**	**25.32**	**0.675**	**17.15**	**21.44**	**95.35**	**10.70**	**1.87**	**C1095-082-3000-S**	**1.188**	**30.18**	**16.15**	**71.84**	**8.91**	**1.56**
C1095-082-3500-M	**1.095**	**27.81**	**0.082**	**2.08**	**3.500**	**88.90**	**1.143**	**29.04**	**0.764**	**19.40**	**21.45**	**95.40**	**9.10**	**1.59**	**C1095-082-3500-S**	**1.369**	**34.78**	**16.15**	**71.84**	**7.58**	**1.33**
C1095-082-4000-M	**1.095**	**27.81**	**0.082**	**2.08**	**4.000**	**101.60**	**1.291**	**32.79**	**0.854**	**21.68**	**21.40**	**95.20**	**7.90**	**1.38**	**C1095-082-4000-S**	**1.546**	**39.26**	**16.15**	**71.84**	**6.58**	**1.15**
C1095-082-4500-M	**1.095**	**27.81**	**0.082**	**2.08**	**4.500**	**114.30**	**1.437**	**36.50**	**0.941**	**23.91**	**21.44**	**95.38**	**7.00**	**1.23**	**C1095-082-4500-S**	**1.730**	**43.95**	**16.15**	**71.84**	**5.83**	**1.02**
C1095-082-5000-M	**1.095**	**27.81**	**0.082**	**2.08**	**5.000**	**127.00**	**1.584**	**40.24**	**1.031**	**26.18**	**21.42**	**95.26**	**6.27**	**1.10**	**C1095-082-5000-S**	**1.908**	**48.46**	**16.15**	**71.84**	**5.22**	**0.91**
C1095-093-0875-M	**1.095**	**27.81**	**0.093**	**2.36**	**0.875**	**22.23**	**0.403**	**10.23**	**0.331**	**8.42**	**30.51**	**135.70**	**64.60**	**11.31**	**C1095-093-0875-S**	**0.452**	**11.47**	**22.78**	**101.34**	**53.81**	**9.42**
C1095-093-1000-M	**1.095**	**27.81**	**0.093**	**2.36**	**1.000**	**25.40**	**0.445**	**11.30**	**0.364**	**9.25**	**30.31**	**134.81**	**54.60**	**9.56**	**C1095-093-1000-S**	**0.499**	**12.68**	**22.78**	**101.34**	**45.48**	**7.96**
C1095-093-1250-M	**1.095**	**27.81**	**0.093**	**2.36**	**1.250**	**31.75**	**0.532**	**13.52**	**0.425**	**10.79**	**30.51**	**135.70**	**42.50**	**7.44**	**C1095-093-1250-S**	**0.606**	**15.40**	**22.78**	**101.34**	**35.40**	**6.20**
C1095-093-1500-M	**1.095**	**27.81**	**0.093**	**2.36**	**1.500**	**38.10**	**0.622**	**15.79**	**0.490**	**12.45**	**30.13**	**134.01**	**34.30**	**6.00**	**C1095-093-1500-S**	**0.703**	**17.85**	**22.78**	**101.34**	**28.57**	**5.00**

FOR INFORMATION ON ALTERNATIVE FINISHES, SEE PAGE 311

Part Numbers with an "*" are squared and not ground. **Part Numbers in bold** represent the newly expanded Associated Spring RAYMOND compression spring offering.

MUSIC WIRE															STAINLESS STEEL						
Catalog #	Outside Diameter (OD)		Wire Diameter (d)		Free Length (L) Approx		Load Length (L_1)		Solid Height (Sh) Approx		Load (P) at L_1		Spring Rate (R)		Catalog #	Load Length (L_1)		Load (P) at L_1		Spring Rate (R)	
	in	mm	in	mm	in	mm	in	mm	in	mm	lb	N	lb/in	N/mm		in	mm	lb	N	lb/in	N/mm
C1095-093-1750-M	**1.095**	**27.81**	**0.093**	**2.36**	**1.750**	**44.45**	**0.710**	**18.04**	**0.553**	**14.05**	**30.05**	**133.65**	**28.90**	**5.06**	**C1095-093-1750-S**	**0.804**	**20.41**	**22.78**	**101.34**	**24.07**	**4.21**
C1095-093-2000-M	**1.095**	**27.81**	**0.093**	**2.36**	**2.000**	**50.80**	**0.797**	**20.26**	**0.614**	**15.61**	**29.94**	**133.20**	**24.90**	**4.36**	**C1095-093-2000-S**	**0.902**	**22.90**	**22.78**	**101.34**	**20.74**	**3.63**
C1095-093-2500-M	**1.095**	**27.81**	**0.093**	**2.36**	**2.500**	**63.50**	**0.966**	**24.55**	**0.731**	**18.56**	**29.90**	**133.02**	**19.50**	**3.41**	**C1095-093-2500-S**	**1.097**	**27.88**	**22.78**	**101.34**	**16.24**	**2.84**
C1095-093-3000-M	**1.095**	**27.81**	**0.093**	**2.36**	**3.000**	**76.20**	**1.136**	**28.86**	**0.848**	**21.53**	**29.82**	**132.65**	**16.00**	**2.80**	**C1095-093-3000-S**	**1.291**	**32.78**	**22.78**	**101.34**	**13.33**	**2.33**
C1095-093-3500-M	**1.095**	**27.81**	**0.093**	**2.36**	**3.500**	**88.90**	**1.302**	**33.07**	**0.960**	**24.38**	**30.00**	**133.45**	**13.65**	**2.39**	**C1095-093-3500-S**	**1.496**	**38.01**	**22.78**	**101.34**	**11.37**	**1.99**
C1095-093-4000-M	**1.095**	**27.81**	**0.093**	**2.36**	**4.000**	**101.60**	**1.472**	**37.38**	**1.077**	**27.35**	**29.93**	**133.16**	**11.84**	**2.07**	**C1095-093-4000-S**	**1.690**	**42.93**	**22.78**	**101.34**	**9.86**	**1.73**
C1095-093-4500-M	**1.095**	**27.81**	**0.093**	**2.36**	**4.500**	**114.30**	**1.646**	**41.80**	**1.199**	**30.45**	**29.69**	**132.05**	**10.40**	**1.82**	**C1095-093-4500-S**	**1.870**	**47.50**	**22.78**	**101.34**	**8.66**	**1.52**
C1095-105-0875-M	**1.095**	**27.81**	**0.105**	**2.67**	**0.875**	**22.23**	**0.454**	**11.52**	**0.398**	**10.11**	**41.00**	**182.38**	**97.30**	**17.03**	**C1095-105-0875-S**	**0.484**	**12.30**	**31.66**	**140.84**	**81.05**	**14.18**
C1095-105-1000-M	**1.095**	**27.81**	**0.105**	**2.67**	**1.000**	**25.40**	**0.507**	**12.88**	**0.441**	**11.20**	**40.37**	**179.55**	**81.87**	**14.33**	**C1095-105-1000-S**	**0.536**	**13.61**	**31.66**	**140.84**	**68.20**	**11.93**
C1095-105-1250-M	**1.095**	**27.81**	**0.105**	**2.67**	**1.250**	**31.75**	**0.614**	**15.59**	**0.527**	**13.38**	**39.50**	**175.71**	**62.10**	**10.87**	**C1095-105-1250-S**	**0.638**	**16.20**	**31.66**	**140.84**	**51.73**	**9.05**
C1095-105-1500-M	**1.095**	**27.81**	**0.105**	**2.67**	**1.500**	**38.10**	**0.721**	**18.31**	**0.613**	**15.56**	**38.95**	**173.26**	**50.00**	**8.75**	**C1095-105-1500-S**	**0.740**	**18.79**	**31.66**	**140.84**	**41.65**	**7.29**
C1095-105-1750-M	**1.095**	**27.81**	**0.105**	**2.67**	**1.750**	**44.45**	**0.824**	**20.92**	**0.693**	**17.61**	**38.91**	**173.06**	**42.00**	**7.35**	**C1095-105-1750-S**	**0.845**	**21.46**	**31.66**	**140.84**	**34.99**	**6.12**
C1095-105-2000-M	**1.095**	**27.81**	**0.105**	**2.67**	**2.000**	**50.80**	**0.923**	**23.44**	**0.770**	**19.55**	**38.95**	**173.24**	**36.16**	**6.33**	**C1095-105-2000-S**	**0.949**	**24.10**	**31.66**	**140.84**	**30.12**	**5.27**
C1095-105-2500-M	**1.095**	**27.81**	**0.105**	**2.67**	**2.500**	**63.50**	**1.123**	**28.52**	**0.924**	**23.46**	**38.88**	**172.94**	**28.23**	**4.94**	**C1095-105-2500-S**	**1.154**	**29.30**	**31.66**	**140.84**	**23.52**	**4.12**
C1095-105-3000-M	**1.095**	**27.81**	**0.105**	**2.67**	**3.000**	**76.20**	**1.322**	**33.58**	**1.077**	**27.36**	**38.90**	**173.03**	**23.18**	**4.06**	**C1095-105-3000-S**	**1.360**	**34.55**	**31.66**	**140.84**	**19.31**	**3.38**
C1095-105-3500-M	**1.095**	**27.81**	**0.105**	**2.67**	**3.500**	**88.90**	**1.521**	**38.63**	**1.230**	**31.25**	**38.91**	**173.07**	**19.66**	**3.44**	**C1095-105-3500-S**	**1.567**	**39.79**	**31.66**	**140.84**	**16.38**	**2.87**
C1095-105-4000-M	**1.095**	**27.81**	**0.105**	**2.67**	**4.000**	**101.60**	**1.720**	**43.69**	**1.384**	**35.14**	**38.92**	**173.12**	**17.07**	**2.99**	**C1095-105-4000-S**	**1.773**	**45.04**	**31.66**	**140.84**	**14.22**	**2.49**
C1095-105-4500-M	**1.095**	**27.81**	**0.105**	**2.67**	**4.500**	**114.30**	**1.920**	**48.77**	**1.538**	**39.06**	**38.88**	**172.95**	**15.07**	**2.64**	**C1095-105-4500-S**	**1.978**	**50.23**	**31.66**	**140.84**	**12.55**	**2.20**
C1095-112-0875-M	**1.095**	**27.81**	**0.112**	**2.85**	**0.875**	**22.23**	**0.509**	**12.92**	**0.406**	**10.31**	**51.11**	**227.35**	**139.50**	**24.41**	**C1095-112-0875-S**	**0.551**	**13.99**	**37.68**	**167.60**	**116.20**	**20.34**
C1095-112-1000-M	**1.095**	**27.81**	**0.112**	**2.85**	**1.000**	**25.40**	**0.563**	**14.30**	**0.449**	**11.40**	**51.11**	**227.35**	**117.00**	**20.48**	**C1095-112-1000-S**	**0.613**	**15.58**	**37.68**	**167.60**	**97.46**	**17.06**
C1095-112-1250-M	**1.095**	**27.81**	**0.112**	**2.85**	**1.250**	**31.75**	**0.689**	**17.51**	**0.620**	**15.74**	**39.94**	**177.68**	**71.23**	**12.47**	**C1095-112-1250-S**	**0.689**	**17.51**	**33.27**	**148.01**	**59.34**	**10.38**
C1095-112-1500-M	**1.095**	**27.81**	**0.112**	**2.85**	**1.500**	**38.10**	**0.797**	**20.23**	**0.706**	**17.93**	**41.83**	**186.07**	**59.47**	**10.41**	**C1095-112-1500-S**	**0.797**	**20.23**	**34.85**	**155.00**	**49.54**	**8.67**
C1095-112-1750-M	**1.095**	**27.81**	**0.112**	**2.85**	**1.750**	**44.45**	**0.896**	**22.76**	**0.783**	**19.88**	**43.69**	**194.34**	**51.16**	**8.95**	**C1095-112-1750-S**	**0.896**	**22.76**	**36.39**	**161.89**	**42.62**	**7.46**
C1095-112-2000-M	**1.095**	**27.81**	**0.112**	**2.85**	**2.000**	**50.80**	**0.996**	**25.29**	**0.859**	**21.82**	**45.08**	**200.53**	**44.88**	**7.85**	**C1095-112-2000-S**	**0.996**	**25.29**	**37.55**	**167.04**	**37.39**	**6.54**
C1095-112-2500-M	**1.095**	**27.81**	**0.112**	**2.85**	**2.500**	**63.50**	**1.211**	**30.76**	**0.941**	**23.91**	**51.11**	**227.35**	**39.65**	**6.94**	**C1095-112-2500-S**	**1.359**	**34.52**	**37.68**	**167.60**	**33.03**	**5.78**
C1095-112-3000-M	**1.095**	**27.81**	**0.112**	**2.85**	**3.000**	**76.20**	**1.438**	**36.52**	**1.091**	**27.71**	**51.11**	**227.35**	**32.72**	**5.73**	**C1095-112-3000-S**	**1.618**	**41.09**	**37.68**	**167.60**	**27.26**	**4.77**
C1095-112-3500-M	**1.095**	**27.81**	**0.112**	**2.85**	**3.500**	**88.90**	**1.659**	**42.14**	**1.244**	**31.60**	**51.11**	**227.35**	**27.76**	**4.86**	**C1095-112-3500-S**	**1.871**	**47.51**	**37.68**	**167.60**	**23.12**	**4.05**
C1095-112-4000-M	**1.095**	**27.81**	**0.112**	**2.85**	**4.000**	**101.60**	**1.873**	**47.58**	**1.401**	**35.58**	**51.11**	**227.35**	**24.03**	**4.21**	**C1095-112-4000-S**	**2.118**	**53.79**	**37.68**	**167.60**	**20.02**	**3.50**
C1095-112-4500-M	**1.095**	**27.81**	**0.112**	**2.85**	**4.500**	**114.30**	**2.094**	**53.18**	**1.554**	**39.46**	**51.11**	**227.35**	**21.24**	**3.72**	**C1095-112-4500-S**	**2.370**	**60.21**	**37.68**	**167.60**	**17.69**	**3.10**
C1095-120-1000-M	**1.095**	**27.81**	**0.120**	**3.05**	**1.000**	**25.40**	**0.596**	**15.13**	**0.490**	**12.45**	**61.85**	**275.14**	**153.00**	**26.78**	**C1095-120-1000-S**	**0.644**	**16.36**	**45.34**	**201.66**	**127.45**	**22.30**
C1095-120-1500-M	**1.095**	**27.81**	**0.120**	**3.05**	**1.500**	**38.10**	**0.831**	**21.11**	**0.683**	**17.34**	**61.85**	**275.14**	**92.50**	**16.19**	**C1095-120-1500-S**	**0.912**	**23.16**	**45.34**	**201.66**	**77.05**	**13.48**
C1095-120-1750-M	**1.095**	**27.81**	**0.120**	**3.05**	**1.750**	**44.45**	**0.949**	**24.10**	**0.777**	**19.73**	**61.85**	**275.14**	**77.20**	**13.51**	**C1095-120-1750-S**	**1.045**	**26.54**	**45.34**	**201.66**	**64.31**	**11.25**
C1095-120-2000-M	**1.095**	**27.81**	**0.120**	**3.05**	**2.000**	**50.80**	**1.067**	**27.10**	**0.863**	**21.93**	**61.85**	**275.14**	**66.30**	**11.60**	**C1095-120-2000-S**	**1.179**	**29.95**	**45.34**	**201.66**	**55.23**	**9.66**
C1095-120-2250-M	**1.095**	**27.81**	**0.120**	**3.05**	**2.250**	**57.15**	**1.184**	**30.06**	**0.951**	**24.15**	**61.85**	**275.14**	**58.00**	**10.15**	**C1095-120-2250-S**	**1.312**	**33.32**	**45.34**	**201.66**	**48.31**	**8.45**
C1095-120-2500-M	**1.095**	**27.81**	**0.120**	**3.05**	**2.500**	**63.50**	**1.301**	**33.05**	**1.037**	**26.35**	**61.85**	**275.14**	**51.60**	**9.03**	**C1095-120-2500-S**	**1.445**	**36.71**	**45.34**	**201.66**	**42.98**	**7.52**
C1095-120-3000-M	**1.095**	**27.81**	**0.120**	**3.05**	**3.000**	**76.20**	**1.538**	**39.06**	**1.210**	**30.73**	**61.85**	**275.14**	**42.30**	**7.40**	**C1095-120-3000-S**	**1.713**	**43.52**	**45.34**	**201.66**	**35.24**	**6.17**
C1095-120-3500-M	**1.095**	**27.81**	**0.120**	**3.05**	**3.500**	**88.90**	**1.772**	**45.01**	**1.384**	**35.15**	**61.85**	**275.14**	**35.80**	**6.27**	**C1095-120-3500-S**	**1.980**	**50.29**	**45.34**	**201.66**	**29.82**	**5.22**
C1095-120-4000-M	**1.095**	**27.81**	**0.120**	**3.05**	**4.000**	**101.60**	**2.005**	**50.92**	**1.559**	**39.60**	**61.85**	**275.14**	**31.00**	**5.43**	**C1095-120-4000-S**	**2.244**	**57.01**	**45.34**	**201.66**	**25.82**	**4.52**
C1095-120-4500-M	**1.095**	**27.81**	**0.120**	**3.05**	**4.500**	**114.30**	**2.234**	**56.75**	**1.736**	**44.10**	**61.85**	**275.14**	**27.30**	**4.78**	**C1095-120-4500-S**	**2.506**	**63.66**	**45.34**	**201.66**	**22.74**	**3.98**
C1095-125-0875-M	**1.095**	**27.81**	**0.125**	**3.18**	**0.875**	**22.23**	**0.566**	**14.37**	**0.455**	**11.54**	**69.23**	**307.97**	**224.00**	**39.20**	**C1095-125-0875-S**	**0.604**	**15.34**	**50.56**	**224.89**	**186.59**	**32.65**
C1095-125-1000-M	**1.095**	**27.81**	**0.125**	**3.18**	**1.000**	**25.40**	**0.629**	**15.97**	**0.505**	**12.82**	**69.23**	**307.97**	**186.50**	**32.64**	**C1095-125-1000-S**	**0.675**	**17.13**	**50.56**	**224.89**	**155.36**	**27.19**
C1095-125-1250-M	**1.095**	**27.81**	**0.125**	**3.18**	**1.250**	**31.75**	**0.755**	**19.19**	**0.605**	**15.36**	**69.23**	**307.97**	**140.00**	**24.50**	**C1095-125-1250-S**	**0.816**	**20.74**	**50.56**	**224.89**	**116.62**	**20.41**
C1095-125-1500-M	**1.095**	**27.81**	**0.125**	**3.18**	**1.500**	**38.10**	**0.882**	**22.40**	**0.705**	**17.90**	**69.23**	**307.97**	**112.00**	**19.60**	**C1095-125-1500-S**	**0.958**	**24.34**	**50.56**	**224.89**	**93.30**	**16.33**
C1095-125-1750-M	**1.095**	**27.81**	**0.125**	**3.18**	**1.750**	**44.45**	**0.989**	**25.13**	**0.817**	**20.75**	**69.23**	**307.97**	**91.00**	**15.93**	**C1095-125-1750-S**	**1.083**	**27.51**	**50.56**	**224.89**	**75.80**	**13.27**
C1095-125-2000-M	**1.095**	**27.81**	**0.125**	**3.18**	**2.000**	**50.80**	**1.124**	**28.54**	**0.901**	**22.89**	**69.23**	**307.97**	**79.00**	**13.83**	**C1095-125-2000-S**	**1.232**	**31.29**	**50.56**	**224.89**	**65.81**	**11.52**
C1095-125-2250-M	**1.095**	**27.81**	**0.125**	**3.18**	**2.250**	**57.15**	**1.247**	**31.66**	**0.994**	**25.25**	**69.23**	**307.97**	**69.00**	**12.08**	**C1095-125-2250-S**	**1.370**	**34.81**	**50.56**	**224.89**	**57.48**	**10.06**
C1095-125-2500-M	**1.095**	**27.81**	**0.125**	**3.18**	**2.500**	**63.50**	**1.365**	**34.67**	**1.090**	**27.68**	**69.23**	**307.97**	**61.00**	**10.68**	**C1095-125-2500-S**	**1.505**	**38.23**	**50.56**	**224.89**	**50.81**	**8.89**
C1095-125-3000-M	**1.095**	**27.81**	**0.125**	**3.18**	**3.000**	**76.20**	**1.615**	**41.03**	**1.272**	**32.31**	**69.23**	**307.97**	**50.00**	**8.75**	**C1095-125-3000-S**	**1.786**	**45.37**	**50.56**	**224.89**	**41.65**	**7.29**
C1095-125-3500-M	**1.095**	**27.81**	**0.125**	**3.18**	**3.500**	**88.90**	**1.852**	**47.03**	**1.464**	**37.19**	**69.23**	**307.97**	**42.00**	**7.35**	**C1095-125-3500-S**	**2.055**	**52.20**	**50.56**	**224.89**	**34.99**	**6.12**
C1095-125-4000-M	**1.095**	**27.81**	**0.125**	**3.18**	**4.000**	**101.60**	**2.077**	**52.75**	**1.664**	**42.28**	**69.23**	**307.97**	**36.00**	**6.30**	**C1095-125-4000-S**	**2.314**	**58.78**	**50.56**	**224.89**	**29.99**	**5.25**
C1095-125-4500-M	**1.095**	**27.81**	**0.125**	**3.18**	**4.500**	**114.30**	**2.336**	**59.35**	**1.840**	**46.73**	**69.23**	**307.97**	**32.00**	**5.60**	**C1095-125-4500-S**	**2.603**	**66.13**	**50.56**	**224.89**	**26.66**	**4.66**
C1095-135-1500-M	**1.095**	**27.81**	**0.135**	**3.43**	**1.500**	**38.10**	**0.895**	**22.73**	**0.828**	**21.02**	**84.70**	**376.77**	**140.00**	**24.50**	**C1095-135-1500-S**	**0.968**	**24.59**	**62.03**	**275.91**	**116.62**	**20.41**
C1095-135-2000-M	**1.095**	**27.81**	**0.135**	**3.43**	**2.000**	**50.80**	**1.149**	**29.18**	**1.048**	**26.63**	**85.12**	**378.64**	**100.00**	**17.50**	**C1095-135-2000-S**	**1.255**	**31.89**	**62.03**	**275.91**	**83.30**	**14.58**
C1095-135-2250-M	**1.095**	**27.81**	**0.135**	**3.43**	**2.250**	**57.15**	**1.277**	**32.45**	**1.153**	**29.28**	**85.58**	**380.68**	**88.00**	**15.40**	**C1095-135-2250-S**	**1.404**	**35.66**	**62.03**	**275.91**	**73.30**	**12.83**
C1095-135-2500-M	**1.095**	**27.81**	**0.135**	**3.43**	**2.500**	**63.50**	**1.403**	**35.63**	**1.264**	**32.11**	**85.58**	**380.68**	**78.00**	**13.65**	**C1095-135-2500-S**	**1.545**	**39.25**	**62.03**	**275.91**	**64.97**	**11.37**
C1095-135-3000-M	**1.095**	**27.81**	**0.135**	**3.43**	**3.000**	**76.20**	**1.663**	**42.23**	**1.479**	**37.56**	**85.58**	**380.68**	**64.00**	**11.20**	**C1095-135-3000-S**	**1.837**	**46.65**	**62.03**	**275.91**	**53.31**	**9.33**
C1095-135-3500-M	**1.095**	**27.81**	**0.135**	**3.43**	**3.500**	**88.90**	**1.923**	**48.84**	**1.727**	**43.86**	**83.58**	**371.80**	**53.00**	**9.28**	**C1095-135-3500-S**	**2.095**	**53.21**	**62.03**	**275.91**	**44.15**	**7.73**
C1095-135-4000-M	**1.095**	**27.81**	**0.135**	**3.43**	**4.000**	**101.60**	**2.176**	**55.26**	**1.947**	**49.44**	**83.92**	**373.28**	**46.00**	**8.05**	**C1095-135-4000-S**	**2.381**	**60.48**	**62.03**	**275.91**	**38.32**	**6.71**
C1095-135-4500-M	**1.095**	**27.81**	**0.135**	**3.43**	**4.500**	**114.30**	**2.453**	**62.30**	**2.196**	**55.78**	**81.89**	**364.28**	**40.00**	**7.00**	**C1095-135-4500-S**	**2.638**	**67.02**	**62.03**	**275.91**	**33.32**	**5.83**
C1095-135-5000-M	**1.095**	**27.81**	**0.135**	**3.43**	**5.000**	**127.00**	**2.700**	**68.57**	**2.408**	**61.17**	**82.81**	**368.36**	**36.00**	**6.30**	**C1095-135-5000-S**	**2.932**	**74.46**	**62.03**	**275.91**	**29.99**	**5.25**
C1100-085-0875-M	1.100	27.94	0.085	2.16	0.880	22.35	0.527	13.39	0.348	8.84	15.94	70.90	45.10	7.89	C1100-085-0875-S	0.527	13.39	13.28	59.06	37.57	6.57
C1100-085-1000-M	1.100	27.94	0.085	2.16	1.000	25.40	0.584	14.83	0.372	9.45	15.94	70.90	38.30	6.70	C1100-085-1000-S	0.584	14.83	13.28	59.06	31.90	5.58
C1100-085-1250-M	1.100	27.94	0.085	2.16	1.250	31.75	0.709	18.01	0.420	10.67	15.94	70.90	29.50	5.16	C1100-085-1250-S	0.709	18.01	13.28	59.06	24.57	4.30
C1100-085-1500-M	1.100	27.94	0.085	2.16	1.500	38.10	0.833	21.16	0.467	11.86	15.94	70.90	23.90	4.18	C1100-085-1500-S	0.833	21.16	13.28	59.06	19.91	3.48

Part Numbers with an "*" are squared and not ground. **Part Numbers in bold** represent the newly expanded Associated Spring RAYMOND compression spring offering.

MUSIC WIRE															STAINLESS STEEL					
Catalog #	Outside Diameter (OD)		Wire Diameter (d)		Free Length (L) Approx		Load Length (L_1)		Solid Height (Sh) Approx		Load (P) at L_1		Spring Rate (R)		Catalog #	Load Length (L_1)		Load (P) at L_1		Spring Rate (R)	
	in	mm	in	mm	in	mm	in	mm	in	mm	lb	N	lb/in	N/mm		in	mm	lb	N	lb/in	N/mm
C1100-085-2000-M	1.100	27.94	0.085	2.16	2.000	50.80	1.083	27.51	0.563	14.30	15.94	70.90	17.40	3.05	C1100-085-2000-S	1.083	27.51	13.28	59.06	14.49	2.54
C1100-085-2500-M	1.100	27.94	0.085	2.16	2.500	63.50	1.332	33.83	0.659	16.74	15.94	70.90	13.70	2.40	C1100-085-2500-S	1.332	33.83	13.28	59.06	11.41	2.00
C1100-085-3000-M	1.100	27.94	0.085	2.16	3.000	76.20	1.577	40.06	0.755	19.18	15.94	70.90	11.20	1.96	C1100-085-3000-S	1.577	40.06	13.28	59.06	9.33	1.63
C1100-085-3500-M	1.100	27.94	0.085	2.16	3.500	88.90	1.831	46.51	0.851	21.62	15.94	70.90	9.60	1.68	C1100-085-3500-S	1.831	46.51	13.28	59.06	8.00	1.40
C1100-085-4000-M	1.100	27.94	0.085	2.16	4.000	101.60	2.081	52.86	0.947	24.05	15.94	70.90	8.30	1.45	C1100-085-4000-S	2.081	52.86	13.28	59.06	6.91	1.21
C1100-085-4500-M	1.100	27.94	0.085	2.16	4.500	114.30	2.330	59.18	1.043	26.49	15.94	70.90	7.30	1.28	C1100-085-4500-S	2.330	59.18	13.28	59.06	6.08	1.06
C1100-085-5000-M	1.100	27.94	0.085	2.16	5.000	127.00	2.580	65.53	1.139	28.93	15.94	70.90	6.60	1.16	C1100-085-5000-S	2.580	65.53	13.28	59.06	5.50	0.96
C1100-096-0875-M	1.100	27.94	0.096	2.44	0.880	22.35	0.559	14.20	0.406	10.31	22.39	99.60	69.80	12.22	C1100-096-0875-S	0.559	14.20	18.65	82.96	58.14	10.18
C1100-096-1000-M	1.100	27.94	0.096	2.44	1.000	25.40	0.621	15.77	0.436	11.07	22.39	99.60	59.00	10.33	C1100-096-1000-S	0.621	15.77	18.65	82.96	49.15	8.60
C1100-096-1250-M	1.100	27.94	0.096	2.44	1.250	31.75	0.753	19.13	0.497	12.62	22.39	99.60	45.10	7.89	C1100-096-1250-S	0.753	19.13	18.65	82.96	37.57	6.57
C1100-096-1500-M	1.100	27.94	0.096	2.44	1.500	38.10	0.886	22.50	0.558	14.17	22.39	99.60	36.50	6.39	C1100-096-1500-S	0.886	22.50	18.65	82.96	30.41	5.32
C1100-096-2000-M	1.100	27.94	0.096	2.44	2.000	50.80	1.151	29.24	0.679	17.25	22.39	99.60	26.40	4.62	C1100-096-2000-S	1.151	29.24	18.65	82.96	21.99	3.85
C1100-096-2500-M	1.100	27.94	0.096	2.44	2.500	63.50	1.417	35.99	0.800	20.32	22.39	99.60	20.70	3.62	C1100-096-2500-S	1.417	35.99	18.65	82.96	17.24	3.02
C1100-096-3000-M	1.100	27.94	0.096	2.44	3.000	76.20	1.682	42.72	0.922	23.42	22.39	99.60	17.00	2.98	C1100-096-3000-S	1.682	42.72	18.65	82.96	14.16	2.48
C1100-096-3500-M	1.100	27.94	0.096	2.44	3.500	88.90	1.947	49.45	1.043	26.49	22.39	99.60	14.40	2.52	C1100-096-3500-S	1.947	49.45	18.65	82.96	12.00	2.10
C1100-096-4000-M	1.100	27.94	0.096	2.44	4.000	101.60	2.212	56.18	1.165	29.59	22.39	99.60	12.50	2.19	C1100-096-4000-S	2.212	56.18	18.65	82.96	10.41	1.82
C1100-096-4500-M	1.100	27.94	0.096	2.44	4.500	114.30	2.478	62.94	1.286	32.66	22.39	99.60	11.10	1.94	C1100-096-4500-S	2.478	62.94	18.65	82.96	9.25	1.62
C1100-105-0875-M	1.100	27.94	0.105	2.67	0.880	22.35	0.586	14.88	0.453	11.51	28.73	127.80	97.70	17.10	C1100-105-0875-S	0.586	14.88	23.93	106.46	81.38	14.24
C1100-105-1000-M	1.100	27.94	0.105	2.67	1.000	25.40	0.651	16.54	0.489	12.42	28.73	127.80	82.20	14.39	C1100-105-1000-S	0.651	16.54	23.93	106.46	68.47	11.98
C1100-105-1250-M	1.100	27.94	0.105	2.67	1.250	31.75	0.790	20.07	0.561	14.25	28.73	127.80	62.50	10.94	C1100-105-1250-S	0.790	20.07	23.93	106.46	52.06	9.11
C1100-105-1500-M	1.100	27.94	0.105	2.67	1.500	38.10	0.930	23.62	0.632	16.05	28.73	127.80	50.40	8.82	C1100-105-1500-S	0.930	23.62	23.93	106.46	41.98	7.35
C1100-105-2000-M	1.100	27.94	0.105	2.67	2.000	50.80	1.208	30.68	0.776	19.71	28.73	127.80	36.30	6.35	C1100-105-2000-S	1.208	30.68	23.93	106.46	30.24	5.29
C1100-105-2500-M	1.100	27.94	0.105	2.67	2.500	63.50	1.487	37.77	0.919	23.34	28.73	127.80	28.40	4.97	C1100-105-2500-S	1.487	37.77	23.93	106.46	23.66	4.14
C1100-105-3000-M	1.100	27.94	0.105	2.67	3.000	76.20	1.766	44.86	1.062	26.97	28.73	127.80	23.30	4.08	C1100-105-3000-S	1.766	44.86	23.93	106.46	19.41	3.40
C1100-105-3500-M	1.100	27.94	0.105	2.67	3.500	88.90	2.045	51.94	1.206	30.63	28.73	127.80	19.70	3.45	C1100-105-3500-S	2.045	51.94	23.93	106.46	16.41	2.87
C1100-112-0875-M	1.100	27.94	0.112	2.85	0.880	22.35	0.606	15.39	0.489	12.42	34.36	152.84	125.50	21.96	C1100-112-0875-S	0.606	15.39	28.62	127.32	104.54	18.29
C1100-112-1000-M	1.100	27.94	0.112	2.85	1.000	25.40	0.674	17.12	0.530	13.46	34.36	152.84	105.30	18.43	C1100-112-1000-S	0.674	17.12	28.62	127.32	87.72	15.35
C1100-112-1250-M	1.100	27.94	0.112	2.85	1.250	31.75	0.818	20.78	0.610	15.49	34.36	152.84	79.60	13.93	C1100-112-1250-S	0.818	20.78	28.62	127.32	66.31	11.60
C1100-112-1500-M	1.100	27.94	0.112	2.85	1.500	38.10	0.963	24.46	0.690	17.53	34.36	152.84	64.00	11.20	C1100-112-1500-S	0.963	24.46	28.62	127.32	53.31	9.33
C1100-112-1750-M	1.100	27.94	0.112	2.85	1.750	44.45	1.108	28.14	0.771	19.58	34.36	152.84	53.50	9.36	C1100-112-1750-S	1.108	28.14	28.62	127.32	44.57	7.80
C1100-112-2000-M	1.100	27.94	0.112	2.85	2.000	50.80	1.253	31.83	0.851	21.62	34.36	152.84	46.00	8.05	C1100-112-2000-S	1.253	31.83	28.62	127.32	38.32	6.71
C1100-112-2250-M	1.100	27.94	0.112	2.85	2.250	57.15	1.398	35.51	0.932	23.67	34.36	152.84	40.30	7.05	C1100-112-2250-S	1.398	35.51	28.62	127.32	33.57	5.87
C1100-112-2500-M	1.100	27.94	0.112	2.85	2.500	63.50	1.543	39.19	1.012	25.70	34.36	152.84	35.90	6.28	C1100-112-2500-S	1.543	39.19	28.62	127.32	29.91	5.23
C1100-112-3000-M	1.100	27.94	0.112	2.85	3.000	76.20	1.832	46.53	1.173	29.79	34.36	152.84	29.40	5.15	C1100-112-3000-S	1.832	46.53	28.62	127.32	24.49	4.29
C1100-112-3500-M	1.100	27.94	0.112	2.85	3.500	88.90	2.122	53.90	1.333	33.86	34.36	152.84	24.90	4.36	C1100-112-3500-S	2.122	53.90	28.62	127.32	20.74	3.63
C1100-112-4000-M	1.100	27.94	0.112	2.85	4.000	101.60	2.412	61.26	1.494	37.95	34.36	152.84	21.60	3.78	C1100-112-4000-S	2.412	61.26	28.62	127.32	17.99	3.15
C1100-112-4500-M	1.100	27.94	0.112	2.85	4.500	114.30	2.701	68.61	1.655	42.04	34.36	152.84	19.10	3.34	C1100-112-4500-S	2.701	68.61	28.62	127.32	15.91	2.78
C1100-125-0880-M	1.100	27.94	0.125	3.18	0.880	22.35	0.640	16.26	0.556	14.12	46.54	207.02	194.30	34.00	C1100-125-0880-S	0.640	16.26	38.77	172.45	161.85	28.32
C1100-125-1000-M	1.100	27.94	0.125	3.18	1.000	25.40	0.715	18.16	0.603	15.32	46.54	207.02	163.20	28.56	C1100-125-1000-S	0.715	18.16	38.77	172.45	135.95	23.79
C1100-125-1250-M	1.100	27.94	0.125	3.18	1.250	31.75	0.870	22.10	0.699	17.75	46.54	207.02	122.40	21.42	C1100-125-1250-S	0.870	22.10	38.77	172.45	101.96	17.84
C1100-125-1500-M	1.100	27.94	0.125	3.18	1.500	38.10	1.025	26.04	0.796	20.22	46.54	207.02	97.90	17.13	C1100-125-1500-S	1.025	26.04	38.77	172.45	81.55	14.27
C1100-125-1750-M	1.100	27.94	0.125	3.18	1.750	44.45	1.180	29.97	0.893	22.68	46.54	207.02	81.60	14.28	C1100-125-1750-S	1.180	29.97	38.77	172.45	67.97	11.90
C1100-125-2000-M	1.100	27.94	0.125	3.18	2.000	50.80	1.335	33.91	0.989	25.12	46.54	207.02	69.90	12.23	C1100-125-2000-S	1.335	33.91	38.77	172.45	58.23	10.19
C1100-125-2250-M	1.100	27.94	0.125	3.18	2.250	57.15	1.490	37.85	1.086	27.58	46.54	207.02	61.20	10.71	C1100-125-2250-S	1.490	37.85	38.77	172.45	50.98	8.92
C1100-125-2500-M	1.100	27.94	0.125	3.18	2.500	63.50	1.644	41.76	1.183	30.05	46.54	207.02	54.40	9.52	C1100-125-2500-S	1.644	41.76	38.77	172.45	45.32	7.93
C1100-125-3000-M	1.100	27.94	0.125	3.18	3.000	76.20	1.954	49.63	1.376	34.95	46.54	207.02	44.50	7.79	C1100-125-3000-S	1.954	49.63	38.77	172.45	37.07	6.49
C1100-125-3500-M	1.100	27.94	0.125	3.18	3.500	88.90	2.264	57.51	1.569	39.85	46.54	207.02	37.70	6.60	C1100-125-3500-S	2.264	57.51	38.77	172.45	31.40	5.50
C1100-125-4000-M	1.100	27.94	0.125	3.18	4.000	101.60	2.574	65.38	1.763	44.78	46.54	207.02	32.60	5.71	C1100-125-4000-S	2.574	65.38	38.77	172.45	27.16	4.75
C1100-125-4500-M	1.100	27.94	0.125	3.18	4.500	114.30	2.884	73.25	1.956	49.68	46.54	207.02	28.80	5.04	C1100-125-4500-S	2.884	73.25	38.77	172.45	23.99	4.20
C1100-135-1500-M	1.100	27.94	0.135	3.43	1.500	38.10	1.070	27.18	0.874	22.20	57.51	255.82	133.70	23.40	C1100-135-1500-S	1.070	27.18	47.91	213.10	111.37	19.49
C1100-135-2000-M	1.100	27.94	0.135	3.43	2.000	50.80	1.395	35.43	1.092	27.74	57.51	255.82	95.10	16.64	C1100-135-2000-S	1.395	35.43	47.91	213.10	79.22	13.86
C1100-135-2500-M	1.100	27.94	0.135	3.43	2.500	63.50	1.720	43.69	1.310	33.27	57.51	255.82	73.80	12.92	C1100-135-2500-S	1.720	43.69	47.91	213.10	61.48	10.76
C1100-135-3000-M	1.100	27.94	0.135	3.43	3.000	76.20	2.045	51.94	1.528	38.81	57.51	255.82	60.30	10.55	C1100-135-3000-S	2.045	51.94	47.91	213.10	50.23	8.79
C1100-135-3500-M	1.100	27.94	0.135	3.43	3.500	88.90	2.371	60.22	1.746	44.35	57.51	255.82	50.90	8.91	C1100-135-3500-S	2.371	60.22	47.91	213.10	42.40	7.42
C1100-135-4000-M	1.100	27.94	0.135	3.43	4.000	101.60	2.696	68.48	1.964	49.89	57.51	255.82	44.10	7.72	C1100-135-4000-S	2.696	68.48	47.91	213.10	36.74	6.43
C1100-135-4500-M	1.100	27.94	0.135	3.43	4.500	114.30	3.021	76.73	2.182	55.42	57.51	255.82	38.90	6.81	C1100-135-4500-S	3.021	76.73	47.91	213.10	32.40	5.67
C1100-135-5000-M	1.100	27.94	0.135	3.43	5.000	127.00	3.346	84.99	2.400	60.96	57.51	255.82	34.80	6.09	C1100-135-5000-S	3.346	84.99	47.91	213.10	28.99	5.07
D13380	1.110	28.20	0.126	3.20	1.673	42.50	0.752	19.10	0.693	17.60	103.62	460.91	110.97	19.42	D23380	0.752	19.10	86.35	384.09	92.46	16.18
D13390	1.110	28.20	0.126	3.20	2.500	63.50	1.035	26.30	0.945	24.00	103.62	460.91	70.63	12.36	D23390	1.035	26.30	86.35	384.09	58.86	10.30
D13400	1.110	28.20	0.126	3.20	3.720	94.50	1.461	37.10	1.323	33.60	103.62	460.91	45.83	8.02	D23400	1.461	37.10	86.35	384.09	38.17	6.68
D13410	1.110	28.20	0.126	3.20	5.315	135.00	2.031	51.60	1.827	46.40	103.62	460.91	31.14	5.45	D23410	2.031	51.60	86.35	384.09	25.94	4.54
D13420	1.110	28.20	0.126	3.20	7.874	200.00	2.882	73.20	2.583	65.60	103.62	460.91	21.03	3.68	D23420	2.882	73.20	86.35	384.09	17.54	3.07
C1116-092-2000-M	**1.116**	**28.35**	**0.092**	**2.34**	**2.000**	**50.80**	**0.784**	**19.92**	**0.598**	**15.20**	**27.80**	**123.65**	**22.87**	**4.00**	**C1116-092-2000-S**	**0.908**	**23.05**	**21.72**	**96.63**	**19.88**	**3.48**
C1116-092-2125-M	**1.116**	**28.35**	**0.092**	**2.34**	**2.125**	**53.98**	**0.826**	**20.97**	**0.626**	**15.91**	**27.80**	**123.65**	**21.39**	**3.74**	**C1116-092-2125-S**	**0.957**	**24.32**	**21.72**	**96.63**	**18.60**	**3.26**

FOR INFORMATION ON ALTERNATIVE FINISHES, SEE PAGE 311

Part Numbers with an "*" are squared and not ground. **Part Numbers in bold** represent the newly expanded Associated Spring RAYMOND compression spring offering.

MUSIC WIRE																STAINLESS STEEL						
Catalog #	Outside Diameter (OD)		Wire Diameter (d)		Free Length (L) Approx		Load Length (L_1)		Solid Height (Sh) Approx		Load (P) at L_1		Spring Rate (R)		Catalog #	Load Length (L_1)		Load (P) at L_1		Spring Rate (R)	
	in	mm	in	mm	in	mm	in	mm	in	mm	lb	N	lb/in	N/mm		in	mm	lb	N	lb/in	N/mm
C1116-092-2250-M	1.116	28.35	0.092	2.34	2.250	57.15	0.867	22.02	0.654	16.62	27.80	123.65	20.10	3.52	**C1116-092-2250-S**	1.007	25.58	21.72	96.63	17.48	3.06
C1116-092-2375-M	1.116	28.35	0.092	2.34	2.375	60.33	0.908	23.07	0.682	17.32	27.80	123.65	18.95	3.32	**C1116-092-2375-S**	1.057	26.85	21.72	96.63	16.48	2.88
C1116-092-2500-M	1.116	28.35	0.092	2.34	2.500	63.50	0.950	24.12	0.710	18.03	27.80	123.65	17.93	3.14	**C1116-092-2500-S**	1.107	28.11	21.72	96.63	15.59	2.73
C1116-092-2625-M	1.116	28.35	0.092	2.34	2.625	66.68	0.991	25.17	0.738	18.74	27.80	123.65	17.01	2.98	**C1116-092-2625-S**	1.157	29.38	21.72	96.63	14.79	2.59
C1116-092-2750-M	1.116	28.35	0.092	2.34	2.750	69.85	1.032	26.22	0.766	19.45	27.80	123.65	16.18	2.83	**C1116-092-2750-S**	1.206	30.64	21.72	96.63	14.07	2.46
C1116-092-2875-M	1.116	28.35	0.092	2.34	2.875	73.03	1.074	27.27	0.794	20.16	27.80	123.65	15.43	2.70	**C1116-092-2875-S**	1.256	31.91	21.72	96.63	13.42	2.35
C1116-092-3000-M	1.116	28.35	0.092	2.34	3.000	76.20	1.115	28.32	0.821	20.87	27.80	123.65	14.75	2.58	**C1116-092-3000-S**	1.306	33.17	21.72	96.63	12.82	2.24
C1116-092-3250-M	1.116	28.35	0.092	2.34	3.250	82.55	1.198	30.42	0.877	22.28	27.80	123.65	13.54	2.37	**C1116-092-3250-S**	1.406	35.70	21.72	96.63	11.78	2.06
C1116-092-3500-M	1.116	28.35	0.092	2.34	3.500	88.90	1.280	32.52	0.933	23.70	27.80	123.65	12.52	2.19	**C1116-092-3500-S**	1.505	38.23	21.72	96.63	10.89	1.91
C1116-092-3750-M	1.116	28.35	0.092	2.34	3.750	95.25	1.363	34.62	0.989	25.12	27.80	123.65	11.65	2.04	**C1116-092-3750-S**	1.605	40.76	21.72	96.63	10.13	1.77
C1116-092-4000-M	1.116	28.35	0.092	2.34	4.000	101.60	1.446	36.72	1.045	26.53	27.80	123.65	10.88	1.90	**C1116-092-4000-S**	1.704	43.29	21.72	96.63	9.46	1.66
C1116-092-4250-M	1.116	28.35	0.092	2.34	4.250	107.95	1.528	38.82	1.100	27.95	27.80	123.65	10.21	1.79	**C1116-092-4250-S**	1.804	45.82	21.72	96.63	8.88	1.55
C1116-092-4500-M	1.116	28.35	0.092	2.34	4.500	114.30	1.611	40.92	1.156	29.37	27.80	123.65	9.62	1.68	**C1116-092-4500-S**	1.904	48.35	21.72	96.63	8.37	1.46
C1116-092-4750-M	1.116	28.35	0.092	2.34	4.750	120.65	1.694	43.02	1.212	30.78	27.80	123.65	9.10	1.59	**C1116-092-4750-S**	2.003	50.88	21.72	96.63	7.91	1.38
C1116-092-5000-M	1.116	28.35	0.092	2.34	5.000	127.00	1.776	45.12	1.268	32.20	27.80	123.65	8.62	1.51	**C1116-092-5000-S**	2.103	53.41	21.72	96.63	7.50	1.31
C1116-092-5250-M	1.116	28.35	0.092	2.34	5.250	133.35	1.859	47.22	1.323	33.62	27.80	123.65	8.20	1.43	**C1116-092-5250-S**	2.202	55.94	21.72	96.63	7.13	1.25
C1116-092-5500-M	1.116	28.35	0.092	2.34	5.500	139.70	1.942	49.31	1.379	35.03	27.80	123.65	7.81	1.37	**C1116-092-5500-S**	2.302	58.47	21.72	96.63	6.79	1.19
C1116-092-5750-M	1.116	28.35	0.092	2.34	5.750	146.05	2.024	51.41	1.435	36.45	27.80	123.65	7.46	1.31	**C1116-092-5750-S**	2.402	61.00	21.72	96.63	6.49	1.14
C1116-092-6000-M	1.116	28.35	0.092	2.34	6.000	152.40	2.107	53.51	1.491	37.87	27.80	123.65	7.14	1.25	**C1116-092-6000-S**	2.501	63.53	21.72	96.63	6.21	1.09
C1116-092-6250-M	1.116	28.35	0.092	2.34	6.250	158.75	2.189	55.61	1.547	39.28	27.80	123.65	6.85	1.20	**C1116-092-6250-S**	2.601	66.06	21.72	96.63	5.95	1.04
C1116-092-6500-M	1.116	28.35	0.092	2.34	6.500	165.10	2.272	57.71	1.602	40.70	27.80	123.65	6.58	1.15	**C1116-092-6500-S**	2.700	68.59	21.72	96.63	5.72	1.00
C1116-092-6750-M	1.116	28.35	0.092	2.34	6.750	171.45	2.355	59.81	1.658	42.12	27.80	123.65	6.32	1.11	**C1116-092-6750-S**	2.800	71.12	21.72	96.63	5.50	0.96
C1116-092-7000-M	1.116	28.35	0.092	2.34	7.000	177.80	2.437	61.91	1.714	43.53	27.80	123.65	6.09	1.07	**C1116-092-7000-S**	2.900	73.65	21.72	96.63	5.30	0.93
C1116-092-7500-M	1.116	28.35	0.092	2.34	7.500	190.50	2.603	66.11	1.825	46.37	27.80	123.65	5.68	0.99	**C1116-092-7500-S**	3.099	78.71	21.72	96.63	4.94	0.86
C1116-092-8000-M	1.116	28.35	0.092	2.34	8.000	203.20	2.768	70.31	1.937	49.20	27.80	123.65	5.31	0.93	**C1116-092-8000-S**	3.298	83.77	21.72	96.63	4.62	0.81
C1116-092-8500-M	1.116	28.35	0.092	2.34	8.500	215.90	2.933	74.51	2.049	52.03	27.80	123.65	4.99	0.87	**C1116-092-8500-S**	3.497	88.83	21.72	96.63	4.34	0.76
C1116-092-9000-M	1.116	28.35	0.092	2.34	9.000	228.60	3.099	78.71	2.160	54.87	27.80	123.65	4.71	0.82	**C1116-092-9000-S**	3.697	93.89	21.72	96.63	4.10	0.72
C1116-092-9500-M	1.116	28.35	0.092	2.34	9.500	241.30	3.264	82.90	2.272	57.70	27.80	123.65	4.46	0.78	**C1116-092-9500-S**	3.896	98.95	21.72	96.63	3.88	0.68
C1116-098-1875-M	1.116	28.35	0.098	2.49	1.875	47.63	0.790	20.08	0.629	15.98	33.14	147.41	30.56	5.35	**C1116-098-1875-S**	0.904	22.97	25.80	114.75	26.57	4.65
C1116-098-2000-M	1.116	28.35	0.098	2.49	2.000	50.80	0.835	21.20	0.661	16.78	33.14	147.41	28.44	4.98	**C1116-098-2000-S**	0.957	24.30	25.80	114.75	24.73	4.33
C1116-098-2125-M	1.116	28.35	0.098	2.49	2.125	53.98	0.879	22.33	0.692	17.58	33.14	147.41	26.60	4.65	**C1116-098-2125-S**	1.010	25.64	25.80	114.75	23.13	4.05
C1116-098-2250-M	1.116	28.35	0.098	2.49	2.250	57.15	0.923	23.45	0.724	18.38	33.14	147.41	24.98	4.37	**C1116-098-2250-S**	1.062	26.98	25.80	114.75	21.72	3.80
C1116-098-2375-M	1.116	28.35	0.098	2.49	2.375	60.33	0.968	24.57	0.755	19.18	33.14	147.41	23.55	4.12	**C1116-098-2375-S**	1.115	28.32	25.80	114.75	20.47	3.58
C1116-098-2500-M	1.116	28.35	0.098	2.49	2.500	63.50	1.012	25.70	0.787	19.98	33.14	147.41	22.27	3.90	**C1116-098-2500-S**	1.168	29.66	25.80	114.75	19.36	3.39
C1116-098-2625-M	1.116	28.35	0.098	2.49	2.625	66.68	1.056	26.82	0.818	20.78	33.14	147.41	21.12	3.70	**C1116-098-2625-S**	1.220	31.00	25.80	114.75	18.37	3.21
C1116-098-2750-M	1.116	28.35	0.098	2.49	2.750	69.85	1.100	27.95	0.850	21.58	33.14	147.41	20.09	3.52	**C1116-098-2750-S**	1.273	32.34	25.80	114.75	17.47	3.06
C1116-098-2875-M	1.116	28.35	0.098	2.49	2.875	73.03	1.145	29.07	0.881	22.38	33.14	147.41	19.15	3.35	**C1116-098-2875-S**	1.326	33.68	25.80	114.75	16.65	2.91
C1116-098-3000-M	1.116	28.35	0.098	2.49	3.000	76.20	1.189	30.20	0.913	23.18	33.14	147.41	18.30	3.20	**C1116-098-3000-S**	1.379	35.02	25.80	114.75	15.91	2.78
C1116-098-3250-M	1.116	28.35	0.098	2.49	3.250	82.55	1.277	32.44	0.976	24.78	33.14	147.41	16.80	2.94	**C1116-098-3250-S**	1.484	37.70	25.80	114.75	14.61	2.56
C1116-098-3500-M	1.116	28.35	0.098	2.49	3.500	88.90	1.366	34.69	1.039	26.38	33.14	147.41	15.53	2.72	**C1116-098-3500-S**	1.590	40.37	25.80	114.75	13.50	2.36
C1116-098-3750-M	1.116	28.35	0.098	2.49	3.750	95.25	1.454	36.94	1.102	27.98	33.14	147.41	14.44	2.53	**C1116-098-3750-S**	1.695	43.05	25.80	114.75	12.55	2.20
C1116-098-4000-M	1.116	28.35	0.098	2.49	4.000	101.60	1.543	39.19	1.165	29.58	33.14	147.41	13.49	2.36	**C1116-098-4000-S**	1.800	45.73	25.80	114.75	11.73	2.05
C1116-098-4250-M	1.116	28.35	0.098	2.49	4.250	107.95	1.631	41.44	1.228	31.18	33.14	147.41	12.66	2.21	**C1116-098-4250-S**	1.906	48.41	25.80	114.75	11.01	1.93
C1116-098-4500-M	1.116	28.35	0.098	2.49	4.500	114.30	1.720	43.68	1.291	32.78	33.14	147.41	11.92	2.09	**C1116-098-4500-S**	2.011	51.09	25.80	114.75	10.37	1.81
C1116-098-4750-M	1.116	28.35	0.098	2.49	4.750	120.65	1.808	45.93	1.354	34.39	33.14	147.41	11.27	1.97	**C1116-098-4750-S**	2.117	53.77	25.80	114.75	9.80	1.71
C1116-098-5000-M	1.116	28.35	0.098	2.49	5.000	127.00	1.897	48.18	1.417	35.99	33.14	147.41	10.68	1.87	**C1116-098-5000-S**	2.222	56.44	25.80	114.75	9.29	1.63
C1116-098-5250-M	1.116	28.35	0.098	2.49	5.250	133.35	1.985	50.43	1.480	37.59	33.14	147.41	10.15	1.78	**C1116-098-5250-S**	2.328	59.12	25.80	114.75	8.83	1.54
C1116-098-5500-M	1.116	28.35	0.098	2.49	5.500	139.70	2.074	52.68	1.543	39.19	33.14	147.41	9.67	1.69	**C1116-098-5500-S**	2.433	61.80	25.80	114.75	8.41	1.47
C1116-098-5750-M	1.116	28.35	0.098	2.49	5.750	146.05	2.162	54.93	1.606	40.79	33.14	147.41	9.24	1.62	**C1116-098-5750-S**	2.539	64.48	25.80	114.75	8.03	1.41
C1116-098-6000-M	1.116	28.35	0.098	2.49	6.000	152.40	2.251	57.17	1.669	42.39	33.14	147.41	8.84	1.55	**C1116-098-6000-S**	2.644	67.16	25.80	114.75	7.69	1.35
C1116-098-6250-M	1.116	28.35	0.098	2.49	6.250	158.75	2.339	59.42	1.732	43.99	33.14	147.41	8.47	1.48	**C1116-098-6250-S**	2.749	69.83	25.80	114.75	7.37	1.29
C1116-098-6500-M	1.116	28.35	0.098	2.49	6.500	165.10	2.428	61.67	1.795	45.59	33.14	147.41	8.14	1.42	**C1116-098-6500-S**	2.855	72.51	25.80	114.75	7.08	1.24
C1116-098-6750-M	1.116	28.35	0.098	2.49	6.750	171.45	2.517	63.92	1.858	47.19	33.14	147.41	7.83	1.37	**C1116-098-6750-S**	2.960	75.19	25.80	114.75	6.81	1.19
C1116-098-7000-M	1.116	28.35	0.098	2.49	7.000	177.80	2.605	66.17	1.921	48.79	33.14	147.41	7.54	1.32	**C1116-098-7000-S**	3.066	77.87	25.80	114.75	6.56	1.15
C1116-098-7500-M	1.116	28.35	0.098	2.49	7.500	190.50	2.782	70.66	2.047	51.99	33.14	147.41	7.02	1.23	**C1116-098-7500-S**	3.277	83.23	25.80	114.75	6.11	1.07
C1116-098-8000-M	1.116	28.35	0.098	2.49	8.000	203.20	2.959	75.16	2.173	55.19	33.14	147.41	6.57	1.15	**C1116-098-8000-S**	3.488	88.58	25.80	114.75	5.72	1.00
C1116-098-8500-M	1.116	28.35	0.098	2.49	8.500	215.90	3.136	79.66	2.299	58.40	33.14	147.41	6.18	1.08	**C1116-098-8500-S**	3.698	93.94	25.80	114.75	5.37	0.94
C1116-098-9000-M	1.116	28.35	0.098	2.49	9.000	228.60	3.313	84.15	2.425	61.60	33.14	147.41	5.83	1.02	**C1116-098-9000-S**	3.909	99.30	25.80	114.75	5.07	0.89
C1116-098-9500-M*	1.116	28.35	0.098	2.49	9.500	241.30	3.553	90.26	2.629	66.78	33.14	147.41	5.57	0.98	**C1116-098-9500-S***	4.177	106.09	25.80	114.75	4.85	0.85
C1116-105-1750-M	1.116	28.35	0.105	2.67	1.750	44.45	0.799	20.29	0.662	16.82	40.14	178.55	42.19	7.38	**C1116-105-1750-S**	0.902	22.92	31.10	138.33	36.69	6.42
C1116-105-1875-M	1.116	28.35	0.105	2.67	1.875	47.63	0.846	21.50	0.698	17.73	40.14	178.55	39.03	6.83	**C1116-105-1875-S**	0.959	24.35	31.10	138.33	33.94	5.94
C1116-105-2000-M	1.116	28.35	0.105	2.67	2.000	50.80	0.894	22.71	0.734	18.64	40.14	178.55	36.30	6.35	**C1116-105-2000-S**	1.015	25.78	31.10	138.33	31.57	5.52
C1116-105-2125-M	1.116	28.35	0.105	2.67	2.125	53.98	0.942	23.93	0.770	19.56	40.14	178.55	33.93	5.94	**C1116-105-2125-S**	1.071	27.20	31.10	138.33	29.51	5.16
C1116-105-2250-M	1.116	28.35	0.105	2.67	2.250	57.15	0.990	25.14	0.806	20.47	40.14	178.55	31.85	5.57	**C1116-105-2250-S**	1.127	28.63	31.10	138.33	27.70	4.85

Part Numbers with an "*" are squared and not ground. **Part Numbers in bold** represent the newly expanded Associated Spring RAYMOND compression spring offering.

MUSIC WIRE															STAINLESS STEEL					
Catalog #	Outside Diameter (OD)		Wire Diameter (d)		Free Length (L) Approx		Load Length (L_1)		Solid Height (Sh) Approx		Load (P) at L_1		Spring Rate (R)		Catalog #	Load Length (L_1)		Load (P) at L_1		Spring Rate (R)	
	in	mm	in	mm	in	mm	in	mm	in	mm	lb	N	lb/in	N/mm		in	mm	lb	N	lb/in	N/mm
C1116-105-2375-M	1.116	28.35	0.105	2.67	2.375	60.33	1.038	26.35	0.842	21.38	40.14	178.55	30.01	5.25	**C1116-105-2375-S**	1.183	30.06	31.10	138.33	26.10	4.57
C1116-105-2500-M	1.116	28.35	0.105	2.67	2.500	63.50	1.085	27.57	0.877	22.29	40.14	178.55	28.37	4.97	**C1116-105-2500-S**	1.240	31.49	31.10	138.33	24.67	4.32
C1116-105-2625-M	1.116	28.35	0.105	2.67	2.625	66.68	1.133	28.78	0.913	23.20	40.14	178.55	26.91	4.71	**C1116-105-2625-S**	1.296	32.91	31.10	138.33	23.40	4.09
C1116-105-2750-M	1.116	28.35	0.105	2.67	2.750	69.85	1.181	30.00	0.949	24.11	40.14	178.55	25.58	4.48	**C1116-105-2750-S**	1.352	34.34	31.10	138.33	22.25	3.89
C1116-105-2875-M	1.116	28.35	0.105	2.67	2.875	73.03	1.229	31.21	0.985	25.02	40.14	178.55	24.38	4.27	**C1116-105-2875-S**	1.408	35.77	31.10	138.33	21.20	3.71
C1116-105-3000-M	1.116	28.35	0.105	2.67	3.000	76.20	1.276	32.42	1.021	25.93	40.14	178.55	23.29	4.08	**C1116-105-3000-S**	1.464	37.20	31.10	138.33	20.25	3.54
C1116-105-3250-M	1.116	28.35	0.105	2.67	3.250	82.55	1.372	34.85	1.093	27.75	40.14	178.55	21.37	3.74	**C1116-105-3250-S**	1.577	40.05	31.10	138.33	18.59	3.25
C1116-105-3500-M	1.116	28.35	0.105	2.67	3.500	88.90	1.468	37.28	1.164	29.58	40.14	178.55	19.75	3.46	**C1116-105-3500-S**	1.689	42.91	31.10	138.33	17.17	3.01
C1116-105-3750-M	1.116	28.35	0.105	2.67	3.750	95.25	1.563	39.70	1.236	31.40	40.14	178.55	18.36	3.21	**C1116-105-3750-S**	1.802	45.76	31.10	138.33	15.96	2.79
C1116-105-4000-M	1.116	28.35	0.105	2.67	4.000	101.60	1.659	42.13	1.308	33.22	40.14	178.55	17.14	3.00	**C1116-105-4000-S**	1.914	48.62	31.10	138.33	14.91	2.61
C1116-105-4250-M	1.116	28.35	0.105	2.67	4.250	107.95	1.754	44.56	1.380	35.04	40.14	178.55	16.08	2.81	**C1116-105-4250-S**	2.027	51.47	31.10	138.33	13.99	2.45
C1116-105-4500-M	1.116	28.35	0.105	2.67	4.500	114.30	1.850	46.99	1.451	36.86	40.14	178.55	15.15	2.65	**C1116-105-4500-S**	2.139	54.33	31.10	138.33	13.17	2.30
C1116-105-4750-M	1.116	28.35	0.105	2.67	4.750	120.65	1.945	49.41	1.523	38.68	40.14	178.55	14.31	2.50	**C1116-105-4750-S**	2.251	57.18	31.10	138.33	12.45	2.18
C1116-105-5000-M	1.116	28.35	0.105	2.67	5.000	127.00	2.041	51.84	1.595	40.51	40.14	178.55	13.57	2.37	**C1116-105-5000-S**	2.364	60.04	31.10	138.33	11.80	2.06
C1116-105-5250-M	1.116	28.35	0.105	2.67	5.250	133.35	2.137	54.27	1.666	42.33	40.14	178.55	12.89	2.26	**C1116-105-5250-S**	2.476	62.89	31.10	138.33	11.21	1.96
C1116-105-5500-M	1.116	28.35	0.105	2.67	5.500	139.70	2.232	56.70	1.738	44.15	40.14	178.55	12.28	2.15	**C1116-105-5500-S**	2.589	65.75	31.10	138.33	10.68	1.87
C1116-105-5750-M	1.116	28.35	0.105	2.67	5.750	146.05	2.328	59.12	1.810	45.97	40.14	178.55	11.73	2.05	**C1116-105-5750-S**	2.701	68.60	31.10	138.33	10.20	1.78
C1116-105-6000-M	1.116	28.35	0.105	2.67	6.000	152.40	2.423	61.55	1.882	47.79	40.14	178.55	11.22	1.96	**C1116-105-6000-S**	2.813	71.46	31.10	138.33	9.76	1.71
C1116-105-6250-M	1.116	28.35	0.105	2.67	6.250	158.75	2.519	63.98	1.953	49.62	40.14	178.55	10.76	1.88	**C1116-105-6250-S**	2.926	74.31	31.10	138.33	9.36	1.64
C1116-105-6500-M	1.116	28.35	0.105	2.67	6.500	165.10	2.614	66.40	2.025	51.44	40.14	178.55	10.33	1.81	**C1116-105-6500-S**	3.038	77.17	31.10	138.33	8.98	1.57
C1116-105-6750-M	1.116	28.35	0.105	2.67	6.750	171.45	2.710	68.83	2.097	53.26	40.14	178.55	9.94	1.74	**C1116-105-6750-S**	3.151	80.02	31.10	138.33	8.64	1.51
C1116-105-7000-M	1.116	28.35	0.105	2.67	7.000	177.80	2.805	71.26	2.169	55.08	40.14	178.55	9.57	1.67	**C1116-105-7000-S**	3.263	82.88	31.10	138.33	8.32	1.46
C1116-105-7500-M*	1.116	28.35	0.105	2.67	7.500	190.50	3.061	77.76	2.392	60.76	40.14	178.55	9.04	1.58	**C1116-105-7500-S***	3.546	90.06	31.10	138.33	7.86	1.38
C1116-105-8000-M*	1.116	28.35	0.105	2.67	8.000	203.20	3.253	82.62	2.536	64.40	40.14	178.55	8.46	1.48	**C1116-105-8000-S***	3.770	95.77	31.10	138.33	7.35	1.29
C1116-105-8500-M*	1.116	28.35	0.105	2.67	8.500	215.90	3.444	87.47	2.679	68.05	40.14	178.55	7.94	1.39	**C1116-105-8500-S***	3.995	101.48	31.10	138.33	6.90	1.21
C1116-105-9000-M*	1.116	28.35	0.105	2.67	9.000	228.60	3.635	92.33	2.822	71.69	40.14	178.55	7.48	1.31	**C1116-105-9000-S***	4.220	107.19	31.10	138.33	6.51	1.14
C1116-105-9500-M*	1.116	28.35	0.105	2.67	9.500	241.30	3.826	97.18	2.966	75.33	40.14	178.55	7.07	1.24	**C1116-105-9500-S***	4.445	112.90	31.10	138.33	6.15	1.08
C1116-112-1750-M	1.116	28.35	0.112	2.85	1.750	44.45	0.851	21.62	0.727	18.47	48.01	213.54	53.41	9.35	**C1116-112-1750-S**	0.953	24.21	37.01	164.62	46.45	8.13
C1116-112-1875-M	1.116	28.35	0.112	2.85	1.875	47.63	0.903	22.93	0.768	19.50	48.01	213.54	49.37	8.64	**C1116-112-1875-S**	1.013	25.73	37.01	164.62	42.93	7.51
C1116-112-2000-M	1.116	28.35	0.112	2.85	2.000	50.80	0.954	24.23	0.808	20.52	48.01	213.54	45.90	8.03	**C1116-112-2000-S**	1.073	27.25	37.01	164.62	39.91	6.98
C1116-112-2125-M	1.116	28.35	0.112	2.85	2.125	53.98	1.005	25.54	0.848	21.54	48.01	213.54	42.88	7.50	**C1116-112-2125-S**	1.132	28.76	37.01	164.62	37.28	6.52
C1116-112-2250-M	1.116	28.35	0.112	2.85	2.250	57.15	1.057	26.84	0.889	22.57	48.01	213.54	40.23	7.04	**C1116-112-2250-S**	1.192	30.28	37.01	164.62	34.98	6.12
C1116-112-2375-M	1.116	28.35	0.112	2.85	2.375	60.33	1.108	28.15	0.929	23.59	48.01	213.54	37.89	6.63	**C1116-112-2375-S**	1.252	31.80	37.01	164.62	32.95	5.77
C1116-112-2500-M	1.116	28.35	0.112	2.85	2.500	63.50	1.160	29.45	0.969	24.62	48.01	213.54	35.81	6.27	**C1116-112-2500-S**	1.312	33.31	37.01	164.62	31.14	5.45
C1116-112-2625-M	1.116	28.35	0.112	2.85	2.625	66.68	1.211	30.76	1.009	25.64	48.01	213.54	33.95	5.94	**C1116-112-2625-S**	1.371	34.83	37.01	164.62	29.52	5.17
C1116-112-2750-M	1.116	28.35	0.112	2.85	2.750	69.85	1.262	32.06	1.050	26.66	48.01	213.54	32.27	5.65	**C1116-112-2750-S**	1.431	36.35	37.01	164.62	28.06	4.91
C1116-112-2875-M	1.116	28.35	0.112	2.85	2.875	73.03	1.314	33.37	1.090	27.69	48.01	213.54	30.75	5.38	**C1116-112-2875-S**	1.491	37.87	37.01	164.62	26.74	4.68
C1116-112-3000-M	1.116	28.35	0.112	2.85	3.000	76.20	1.365	34.67	1.130	28.71	48.01	213.54	29.36	5.14	**C1116-112-3000-S**	1.551	39.38	37.01	164.62	25.53	4.47
C1116-112-3250-M	1.116	28.35	0.112	2.85	3.250	82.55	1.468	37.28	1.211	30.76	48.01	213.54	26.94	4.71	**C1116-112-3250-S**	1.670	42.42	37.01	164.62	23.42	4.10
C1116-112-3500-M	1.116	28.35	0.112	2.85	3.500	88.90	1.571	39.89	1.292	32.81	48.01	213.54	24.88	4.35	**C1116-112-3500-S**	1.789	45.45	37.01	164.62	21.64	3.79
C1116-112-3750-M	1.116	28.35	0.112	2.85	3.750	95.25	1.673	42.50	1.372	34.85	48.01	213.54	23.12	4.05	**C1116-112-3750-S**	1.909	48.49	37.01	164.62	20.10	3.52
C1116-112-4000-M	1.116	28.35	0.112	2.85	4.000	101.60	1.776	45.11	1.453	36.90	48.01	213.54	21.59	3.78	**C1116-112-4000-S**	2.028	51.52	37.01	164.62	18.77	3.28
C1116-112-4250-M	1.116	28.35	0.112	2.85	4.250	107.95	1.879	47.72	1.533	38.95	48.01	213.54	20.25	3.54	**C1116-112-4250-S**	2.148	54.56	37.01	164.62	17.61	3.08
C1116-112-4500-M	1.116	28.35	0.112	2.85	4.500	114.30	1.982	50.33	1.614	41.00	48.01	213.54	19.06	3.34	**C1116-112-4500-S**	2.267	57.59	37.01	164.62	16.58	2.90
C1116-112-4750-M	1.116	28.35	0.112	2.85	4.750	120.65	2.084	52.94	1.695	43.04	48.01	213.54	18.01	3.15	**C1116-112-4750-S**	2.387	60.62	37.01	164.62	15.66	2.74
C1116-112-5000-M	1.116	28.35	0.112	2.85	5.000	127.00	2.187	55.55	1.775	45.09	48.01	213.54	17.07	2.99	**C1116-112-5000-S**	2.506	63.66	37.01	164.62	14.84	2.60
C1116-112-5250-M	1.116	28.35	0.112	2.85	5.250	133.35	2.290	58.16	1.856	47.14	48.01	213.54	16.22	2.84	**C1116-112-5250-S**	2.626	66.69	37.01	164.62	14.10	2.47
C1116-112-5500-M	1.116	28.35	0.112	2.85	5.500	139.70	2.393	60.77	1.937	49.19	48.01	213.54	15.45	2.70	**C1116-112-5500-S**	2.745	69.73	37.01	164.62	13.43	2.35
C1116-112-5750-M	1.116	28.35	0.112	2.85	5.750	146.05	2.495	63.38	2.017	51.24	48.01	213.54	14.75	2.58	**C1116-112-5750-S**	2.865	72.76	37.01	164.62	12.83	2.24
C1116-112-6000-M	1.116	28.35	0.112	2.85	6.000	152.40	2.598	65.99	2.098	53.28	48.01	213.54	14.11	2.47	**C1116-112-6000-S**	2.984	75.80	37.01	164.62	12.27	2.15
C1116-112-6250-M	1.116	28.35	0.112	2.85	6.250	158.75	2.701	68.60	2.178	55.33	48.01	213.54	13.53	2.37	**C1116-112-6250-S**	3.104	78.83	37.01	164.62	11.76	2.06
C1116-112-6500-M	1.116	28.35	0.112	2.85	6.500	165.10	2.804	71.21	2.259	57.38	48.01	213.54	12.99	2.27	**C1116-112-6500-S**	3.223	81.87	37.01	164.62	11.29	1.98
C1116-112-6750-M	1.116	28.35	0.112	2.85	6.750	171.45	2.906	73.82	2.340	59.43	48.01	213.54	12.49	2.19	**C1116-112-6750-S**	3.343	84.90	37.01	164.62	10.86	1.90
C1116-112-7000-M*	1.116	28.35	0.112	2.85	7.000	177.80	3.075	78.11	2.502	63.54	48.01	213.54	12.23	2.14	**C1116-112-7000-S***	3.520	89.42	37.01	164.62	10.64	1.86
C1116-112-7500-M*	1.116	28.35	0.112	2.85	7.500	190.50	3.281	83.33	2.663	67.64	48.01	213.54	11.38	1.99	**C1116-112-7500-S***	3.759	95.49	37.01	164.62	9.89	1.73
C1116-112-8000-M*	1.116	28.35	0.112	2.85	8.000	203.20	3.486	88.55	2.824	71.73	48.01	213.54	10.64	1.86	**C1116-112-8000-S***	3.998	101.56	37.01	164.62	9.25	1.62
C1116-112-8500-M*	1.116	28.35	0.112	2.85	8.500	215.90	3.692	93.77	2.985	75.83	48.01	213.54	9.98	1.75	**C1116-112-8500-S***	4.237	107.63	37.01	164.62	8.68	1.52
C1116-112-9000-M*	1.116	28.35	0.112	2.85	9.000	228.60	3.897	98.99	3.147	79.92	48.01	213.54	9.41	1.65	**C1116-112-9000-S***	4.476	113.70	37.01	164.62	8.18	1.43
C1116-112-9500-M*	1.116	28.35	0.112	2.85	9.500	241.30	4.103	104.21	3.308	84.02	48.01	213.54	8.89	1.56	**C1116-112-9500-S***	4.715	119.76	37.01	164.62	7.73	1.35
C1116-125-1625-M	1.116	28.35	0.125	3.18	1.625	41.28	0.890	22.59	0.798	20.26	65.04	289.31	88.43	15.48	**C1116-125-1625-S**	0.979	24.87	49.67	220.93	76.90	13.46
C1116-125-1750-M	1.116	28.35	0.125	3.18	1.750	44.45	0.948	24.07	0.846	21.50	65.04	289.31	81.06	14.19	**C1116-125-1750-S**	1.045	26.55	49.67	220.93	70.49	12.34
C1116-125-1875-M	1.116	28.35	0.125	3.18	1.875	47.63	1.006	25.55	0.895	22.73	65.04	289.31	74.83	13.09	**C1116-125-1875-S**	1.112	28.24	49.67	220.93	65.07	11.39
C1116-125-2000-M	1.116	28.35	0.125	3.18	2.000	50.80	1.064	27.02	0.944	23.97	65.04	289.31	69.48	12.16	**C1116-125-2000-S**	1.178	29.92	49.67	220.93	60.42	10.57
C1116-125-2125-M	1.116	28.35	0.125	3.18	2.125	53.98	1.122	28.50	0.992	25.21	65.04	289.31	64.85	11.35	**C1116-125-2125-S**	1.244	31.60	49.67	220.93	56.39	9.87

FOR INFORMATION ON ALTERNATIVE FINISHES, SEE PAGE 311

Part Numbers with an "*" are squared and not ground. **Part Numbers in bold** represent the newly expanded Associated Spring RAYMOND compression spring offering.

| MUSIC WIRE | | |

MUSIC WIRE															STAINLESS STEEL					
Catalog #	Outside Diameter (OD)		Wire Diameter (d)		Free Length (L) Approx		Load Length (L_1)		Solid Height (Sh) Approx		Load (P) at L_1		Spring Rate (R)		Catalog #	Load Length (L_1)		Load (P) at L_1		Spring Rate (R)	
	in	mm	in	mm	in	mm	in	mm	in	mm	lb	N	lb/in	N/mm		in	mm	lb	N	lb/in	N/mm
C1116-148-2000-M	1.116	28.35	0.148	3.76	2.000	50.80	1.247	31.68	1.170	29.72	103.51	460.44	137.51	24.06	**C1116-148-2000-S**	1.350	34.30	77.68	345.56	119.57	20.93
C1116-148-2125-M	1.116	28.35	0.148	3.76	2.125	53.98	1.317	33.45	1.233	31.32	103.51	460.44	128.11	22.42	**C1116-148-2125-S**	1.428	36.26	77.68	345.56	111.40	19.50
C1116-148-2250-M	1.116	28.35	0.148	3.76	2.250	57.15	1.387	35.22	1.296	32.92	103.51	460.44	119.92	20.99	**C1116-148-2250-S**	1.505	38.23	77.68	345.56	104.27	18.25
C1116-148-2375-M	1.116	28.35	0.148	3.76	2.375	60.33	1.457	37.00	1.359	34.52	103.51	460.44	112.71	19.72	**C1116-148-2375-S**	1.582	40.19	77.68	345.56	98.01	17.15
C1116-148-2500-M	1.116	28.35	0.148	3.76	2.500	63.50	1.526	38.77	1.422	36.13	103.51	460.44	106.31	18.60	**C1116-148-2500-S**	1.660	42.16	77.68	345.56	92.45	16.18
C1116-148-2625-M	1.116	28.35	0.148	3.76	2.625	66.68	1.596	40.54	1.485	37.73	103.51	460.44	100.61	17.61	**C1116-148-2625-S**	1.737	44.12	77.68	345.56	87.49	15.31
C1116-148-2750-M	1.116	28.35	0.148	3.76	2.750	69.85	1.666	42.31	1.548	39.33	103.51	460.44	95.48	16.71	**C1116-148-2750-S**	1.814	46.08	77.68	345.56	83.03	14.53
C1116-148-2875-M	1.116	28.35	0.148	3.76	2.875	73.03	1.736	44.09	1.611	40.93	103.51	460.44	90.86	15.90	**C1116-148-2875-S**	1.892	48.05	77.68	345.56	79.00	13.83
C1116-148-3000-M	1.116	28.35	0.148	3.76	3.000	76.20	1.805	45.86	1.674	42.53	103.51	460.44	86.66	15.16	**C1116-148-3000-S**	1.969	50.01	77.68	345.56	75.35	13.19
C1116-148-3250-M	1.116	28.35	0.148	3.76	3.250	82.55	1.945	49.40	1.800	45.73	103.51	460.44	79.32	13.88	**C1116-148-3250-S**	2.124	53.94	77.68	345.56	68.98	12.07
C1116-148-3500-M	1.116	28.35	0.148	3.76	3.500	88.90	2.085	52.95	1.927	48.93	103.51	460.44	73.13	12.80	**C1116-148-3500-S**	2.278	57.87	77.68	345.56	63.59	11.13
C1116-148-3750-M	1.116	28.35	0.148	3.76	3.750	95.25	2.224	56.49	2.053	52.14	103.51	460.44	67.84	11.87	**C1116-148-3750-S**	2.433	61.80	77.68	345.56	58.99	10.32
C1116-148-4000-M	1.116	28.35	0.148	3.76	4.000	101.60	2.364	60.04	2.179	55.34	103.51	460.44	63.26	11.07	**C1116-148-4000-S**	2.588	65.73	77.68	345.56	55.01	9.63
C1116-148-4250-M	1.116	28.35	0.148	3.76	4.250	107.95	2.503	63.58	2.305	58.54	103.51	460.44	59.26	10.37	**C1116-148-4250-S**	2.742	69.66	77.68	345.56	51.53	9.02
C1116-148-4500-M	1.116	28.35	0.148	3.76	4.500	114.30	2.643	67.13	2.431	61.74	103.51	460.44	55.74	9.75	**C1116-148-4500-S**	2.897	73.59	77.68	345.56	48.47	8.48
C1116-148-4750-M	1.116	28.35	0.148	3.76	4.750	120.65	2.782	70.67	2.557	64.95	103.51	460.44	52.61	9.21	**C1116-148-4750-S**	3.052	77.52	77.68	345.56	45.75	8.01
C1116-148-5000-M	1.116	28.35	0.148	3.76	5.000	127.00	2.922	74.22	2.683	68.15	103.51	460.44	49.81	8.72	**C1116-148-5000-S**	3.207	81.45	77.68	345.56	43.32	7.58
C1116-148-5250-M	1.116	28.35	0.148	3.76	5.250	133.35	3.061	77.76	2.809	71.35	103.51	460.44	47.30	8.28	**C1116-148-5250-S**	3.361	85.37	77.68	345.56	41.13	7.20
C1116-148-5500-M	1.116	28.35	0.148	3.76	5.500	139.70	3.201	81.31	2.935	74.55	103.51	460.44	45.03	7.88	**C1116-148-5500-S**	3.516	89.30	77.68	345.56	39.15	6.85
C1116-148-5750-M	1.116	28.35	0.148	3.76	5.750	146.05	3.341	84.85	3.061	77.75	103.51	460.44	42.96	7.52	**C1116-148-5750-S**	3.671	93.23	77.68	345.56	37.36	6.54
C1116-148-6000-M	1.116	28.35	0.148	3.76	6.000	152.40	3.480	88.40	3.187	80.96	103.51	460.44	41.08	7.19	**C1116-148-6000-S**	3.825	97.16	77.68	345.56	35.72	6.25
C1116-148-6250-M	1.116	28.35	0.148	3.76	6.250	158.75	3.620	91.94	3.313	84.16	103.51	460.44	39.35	6.89	**C1116-148-6250-S**	3.980	101.09	77.68	345.56	34.22	5.99
C1116-148-6500-M	1.116	28.35	0.148	3.76	6.500	165.10	3.759	95.49	3.439	87.36	103.51	460.44	37.77	6.61	**C1116-148-6500-S**	4.135	105.02	77.68	345.56	32.84	5.75
C1116-148-6750-M	1.116	28.35	0.148	3.76	6.750	171.45	3.899	99.03	3.565	90.56	103.51	460.44	36.31	6.35	**C1116-148-6750-S**	4.289	108.95	77.68	345.56	31.57	5.52
C1116-148-7000-M	1.116	28.35	0.148	3.76	7.000	177.80	4.038	102.58	3.692	93.77	103.51	460.44	34.95	6.12	**C1116-148-7000-S**	4.444	112.88	77.68	345.56	30.39	5.32
C1116-148-7500-M	1.116	28.35	0.148	3.76	7.500	190.50	4.318	109.67	3.944	100.17	103.51	460.44	32.53	5.69	**C1116-148-7500-S**	4.753	120.73	77.68	345.56	28.28	4.95
C1116-148-8000-M	1.116	28.35	0.148	3.76	8.000	203.20	4.597	116.75	4.196	106.57	103.51	460.44	30.42	5.32	**C1116-148-8000-S**	5.063	128.59	77.68	345.56	26.45	4.63
C1116-148-8500-M	1.116	28.35	0.148	3.76	8.500	215.90	4.876	123.84	4.448	112.98	103.51	460.44	28.56	5.00	**C1116-148-8500-S**	5.372	136.45	77.68	345.56	24.84	4.35
C1116-148-9000-M	1.116	28.35	0.148	3.76	9.000	228.60	5.155	130.93	4.700	119.38	103.51	460.44	26.92	4.71	**C1116-148-9000-S**	5.681	144.31	77.68	345.56	23.41	4.10
C1116-148-9500-M	1.116	28.35	0.148	3.76	9.500	241.30	5.434	138.02	4.952	125.79	103.51	460.44	25.46	4.46	**C1116-148-9500-S**	5.991	152.17	77.68	345.56	22.14	3.87
C1116-162-1625-M	1.116	28.35	0.162	4.12	1.625	41.28	1.119	28.42	1.081	27.46	132.53	589.54	261.84	45.82	**C1116-162-1625-S**	1.193	30.30	98.40	437.72	227.69	39.85
C1116-162-1750-M	1.116	28.35	0.162	4.12	1.750	44.45	1.195	30.36	1.152	29.26	132.53	589.54	238.89	41.81	**C1116-162-1750-S**	1.276	32.42	98.40	437.72	207.73	36.35
C1116-162-1875-M	1.116	28.35	0.162	4.12	1.875	47.63	1.272	32.30	1.223	31.07	132.53	589.54	219.63	38.44	**C1116-162-1875-S**	1.360	34.54	98.40	437.72	190.99	33.42
C1116-162-2000-M	1.116	28.35	0.162	4.12	2.000	50.80	1.348	34.24	1.295	32.88	132.53	589.54	203.25	35.57	**C1116-162-2000-S**	1.443	36.66	98.40	437.72	176.74	30.93
C1116-162-2125-M	1.116	28.35	0.162	4.12	2.125	53.98	1.424	36.18	1.366	34.69	132.53	589.54	189.15	33.10	**C1116-162-2125-S**	1.527	38.78	98.40	437.72	164.48	28.78
C1116-162-2250-M	1.116	28.35	0.162	4.12	2.250	57.15	1.501	38.12	1.437	36.50	132.53	589.54	176.87	30.95	**C1116-162-2250-S**	1.610	40.90	98.40	437.72	153.80	26.92
C1116-162-2375-M	1.116	28.35	0.162	4.12	2.375	60.33	1.577	40.06	1.508	38.30	132.53	589.54	166.09	29.07	**C1116-162-2375-S**	1.694	43.02	98.40	437.72	144.43	25.27
C1116-162-2500-M	1.116	28.35	0.162	4.12	2.500	63.50	1.653	42.00	1.579	40.11	132.53	589.54	156.55	27.40	**C1116-162-2500-S**	1.777	45.14	98.40	437.72	136.13	23.82
C1116-162-2625-M	1.116	28.35	0.162	4.12	2.625	66.68	1.730	43.94	1.650	41.92	132.53	589.54	148.05	25.91	**C1116-162-2625-S**	1.861	47.26	98.40	437.72	128.74	22.53
C1116-162-2750-M	1.116	28.35	0.162	4.12	2.750	69.85	1.806	45.88	1.722	43.73	132.53	589.54	140.42	24.57	**C1116-162-2750-S**	1.944	49.38	98.40	437.72	122.10	21.37
C1116-162-2875-M	1.116	28.35	0.162	4.12	2.875	73.03	1.883	47.82	1.793	45.54	132.53	589.54	133.54	23.37	**C1116-162-2875-S**	2.028	51.50	98.40	437.72	116.12	20.32
C1116-162-3000-M	1.116	28.35	0.162	4.12	3.000	76.20	1.959	49.76	1.864	47.34	132.53	589.54	127.30	22.28	**C1116-162-3000-S**	2.111	53.62	98.40	437.72	110.70	19.37
C1116-162-3250-M	1.116	28.35	0.162	4.12	3.250	82.55	2.112	53.63	2.006	50.96	132.53	589.54	116.42	20.37	**C1116-162-3250-S**	2.278	57.86	98.40	437.72	101.24	17.72
C1116-162-3500-M	1.116	28.35	0.162	4.12	3.500	88.90	2.264	57.51	2.149	54.57	132.53	589.54	107.26	18.77	**C1116-162-3500-S**	2.445	62.10	98.40	437.72	93.27	16.32
C1116-162-3750-M	1.116	28.35	0.162	4.12	3.750	95.25	2.417	61.39	2.291	58.19	132.53	589.54	99.43	17.40	**C1116-162-3750-S**	2.612	66.34	98.40	437.72	86.46	15.13
C1116-162-4000-M	1.116	28.35	0.162	4.12	4.000	101.60	2.570	65.27	2.433	61.81	132.53	589.54	92.67	16.22	**C1116-162-4000-S**	2.779	70.58	98.40	437.72	80.58	14.10
C1116-162-4250-M	1.116	28.35	0.162	4.12	4.250	107.95	2.723	69.15	2.576	65.42	132.53	589.54	86.77	15.18	**C1116-162-4250-S**	2.946	74.82	98.40	437.72	75.45	13.20
C1116-162-4500-M	1.116	28.35	0.162	4.12	4.500	114.30	2.875	73.03	2.718	69.04	132.53	589.54	81.57	14.28	**C1116-162-4500-S**	3.113	79.06	98.40	437.72	70.93	12.41
C1116-162-4750-M	1.116	28.35	0.162	4.12	4.750	120.65	3.028	76.91	2.860	72.65	132.53	589.54	76.97	13.47	**C1116-162-4750-S**	3.280	83.30	98.40	437.72	66.93	11.71
C1116-162-5000-M	1.116	28.35	0.162	4.12	5.000	127.00	3.181	80.79	3.003	76.27	132.53	589.54	72.85	12.75	**C1116-162-5000-S**	3.447	87.55	98.40	437.72	63.35	11.09
C1116-162-5250-M	1.116	28.35	0.162	4.12	5.250	133.35	3.333	84.67	3.145	79.88	132.53	589.54	69.15	12.10	**C1116-162-5250-S**	3.614	91.79	98.40	437.72	60.13	10.52
C1116-162-5500-M	1.116	28.35	0.162	4.12	5.500	139.70	3.486	88.55	3.287	83.50	132.53	589.54	65.81	11.52	**C1116-162-5500-S**	3.781	96.03	98.40	437.72	57.23	10.02
C1116-162-5750-M	1.116	28.35	0.162	4.12	5.750	146.05	3.639	92.43	3.430	87.12	132.53	589.54	62.78	10.99	**C1116-162-5750-S**	3.948	100.27	98.40	437.72	54.59	9.55
C1116-162-6000-M	1.116	28.35	0.162	4.12	6.000	152.40	3.792	96.31	3.572	90.73	132.53	589.54	60.02	10.50	**C1116-162-6000-S**	4.114	104.51	98.40	437.72	52.19	9.13
C1116-162-6250-M	1.116	28.35	0.162	4.12	6.250	158.75	3.944	100.19	3.714	94.35	132.53	589.54	57.48	10.06	**C1116-162-6250-S**	4.281	108.75	98.40	437.72	49.99	8.75
C1116-162-6500-M	1.116	28.35	0.162	4.12	6.500	165.10	4.097	104.07	3.857	97.96	132.53	589.54	55.16	9.65	**C1116-162-6500-S**	4.448	112.99	98.40	437.72	47.96	8.39
C1116-162-6750-M	1.116	28.35	0.162	4.12	6.750	171.45	4.250	107.95	3.999	101.58	132.53	589.54	53.01	9.28	**C1116-162-6750-S**	4.615	117.23	98.40	437.72	46.10	8.07
C1116-162-7000-M	1.116	28.35	0.162	4.12	7.000	177.80	4.403	111.83	4.141	105.19	132.53	589.54	51.03	8.93	**C1116-162-7000-S**	4.782	121.47	98.40	437.72	44.37	7.76
C1116-162-7500-M	1.116	28.35	0.162	4.12	7.500	190.50	4.708	119.59	4.426	112.43	132.53	589.54	47.47	8.31	**C1116-162-7500-S**	5.116	129.95	98.40	437.72	41.28	7.22
C1116-162-8000-M	1.116	28.35	0.162	4.12	8.000	203.20	5.014	127.34	4.711	119.66	132.53	589.54	44.38	7.77	**C1116-162-8000-S**	5.450	138.43	98.40	437.72	38.59	6.75
C1116-162-8500-M	1.116	28.35	0.162	4.12	8.500	215.90	5.319	135.10	4.996	126.89	132.53	589.54	41.67	7.29	**C1116-162-8500-S**	5.784	146.91	98.40	437.72	36.23	6.34
C1116-162-9000-M	1.116	28.35	0.162	4.12	9.000	228.60	5.625	142.86	5.280	134.12	132.53	589.54	39.26	6.87	**C1116-162-9000-S**	6.118	155.39	98.40	437.72	34.14	5.97
C1116-162-9500-M	1.116	28.35	0.162	4.12	9.500	241.30	5.930	150.62	5.565	141.35	132.53	589.54	37.12	6.50	**C1116-162-9500-S**	6.452	163.88	98.40	437.72	32.28	5.65
C1116-177-1625-M	1.116	28.35	0.177	4.50	1.625	41.28	1.196	30.39	1.177	29.89	168.63	750.08	393.40	68.85	**C1116-177-1625-S**	1.263	32.09	123.76	550.52	342.09	59.87

FOR INFORMATION ON ALTERNATIVE FINISHES, SEE PAGE 311

Part Numbers with an "*" are squared and not ground. **Part Numbers in bold** represent the newly expanded Associated Spring RAYMOND compression spring offering.

MUSIC WIRE

Catalog #	Outside Diameter (OD)		Wire Diameter (d)		Free Length (L) Approx		Load Length (L_1)		Solid Height (Sh) Approx		Load (P) at L_1		Spring Rate (R)	
	in	mm	in	mm	in	mm	in	mm	in	mm	lb	N	lb/in	N/mm
C1116-177-1750-M	1.116	28.35	0.177	4.50	1.750	44.45	1.279	32.49	1.256	31.90	168.63	750.08	358.18	62.68
C1116-177-1875-M	1.116	28.35	0.177	4.50	1.875	47.63	1.362	34.60	1.335	33.91	168.63	750.08	328.74	57.53
C1116-177-2000-M	1.116	28.35	0.177	4.50	2.000	50.80	1.445	36.70	1.414	35.92	168.63	750.08	303.78	53.16
C1116-177-2125-M	1.116	28.35	0.177	4.50	2.125	53.98	1.528	38.80	1.493	37.93	168.63	750.08	282.34	49.41
C1116-177-2250-M	1.116	28.35	0.177	4.50	2.250	57.15	1.611	40.91	1.573	39.95	168.63	750.08	263.72	46.15
C1116-177-2375-M	1.116	28.35	0.177	4.50	2.375	60.33	1.693	43.01	1.652	41.96	168.63	750.08	247.41	43.30
C1116-177-2500-M	1.116	28.35	0.177	4.50	2.500	63.50	1.776	45.12	1.731	43.97	168.63	750.08	233.00	40.77
C1116-177-2625-M	1.116	28.35	0.177	4.50	2.625	66.68	1.859	47.22	1.810	45.98	168.63	750.08	220.17	38.53
C1116-177-2750-M	1.116	28.35	0.177	4.50	2.750	69.85	1.942	49.33	1.889	47.99	168.63	750.08	208.69	36.52
C1116-177-2875-M	1.116	28.35	0.177	4.50	2.875	73.03	2.025	51.43	1.969	50.00	168.63	750.08	198.34	34.71
C1116-177-3000-M	1.116	28.35	0.177	4.50	3.000	76.20	2.108	53.53	2.048	52.01	168.63	750.08	188.97	33.07
C1116-177-3250-M	1.116	28.35	0.177	4.50	3.250	82.55	2.273	57.74	2.206	56.03	168.63	750.08	172.66	30.21
C1116-177-3500-M	1.116	28.35	0.177	4.50	3.500	88.90	2.439	61.95	2.364	60.06	168.63	750.08	158.94	27.81
C1116-177-3750-M	1.116	28.35	0.177	4.50	3.750	95.25	2.605	66.16	2.523	64.08	168.63	750.08	147.24	25.77
C1116-177-4000-M	1.116	28.35	0.177	4.50	4.000	101.60	2.770	70.37	2.681	68.10	168.63	750.08	137.14	24.00
C1116-177-4250-M	1.116	28.35	0.177	4.50	4.250	107.95	2.936	74.58	2.839	72.12	168.63	750.08	128.34	22.46
C1116-177-4500-M	1.116	28.35	0.177	4.50	4.500	114.30	3.102	78.79	2.998	76.14	168.63	750.08	120.60	21.11
C1116-177-4750-M	1.116	28.35	0.177	4.50	4.750	120.65	3.267	82.99	3.156	80.17	168.63	750.08	113.74	19.91
C1116-177-5000-M	1.116	28.35	0.177	4.50	5.000	127.00	3.433	87.20	3.315	84.19	168.63	750.08	107.62	18.83
C1116-177-5250-M	1.116	28.35	0.177	4.50	5.250	133.35	3.599	91.41	3.473	88.21	168.63	750.08	102.13	17.87
C1116-177-5500-M	1.116	28.35	0.177	4.50	5.500	139.70	3.765	95.62	3.631	92.23	168.63	750.08	97.17	17.00
C1116-177-5750-M	1.116	28.35	0.177	4.50	5.750	146.05	3.930	99.83	3.790	96.26	168.63	750.08	92.66	16.22
C1116-177-6000-M	1.116	28.35	0.177	4.50	6.000	152.40	4.096	104.04	3.948	100.28	168.63	750.08	88.56	15.50
C1116-177-6250-M	1.116	28.35	0.177	4.50	6.250	158.75	4.262	108.25	4.106	104.30	168.63	750.08	84.81	14.84
C1116-177-6500-M	1.116	28.35	0.177	4.50	6.500	165.10	4.427	112.45	4.265	108.32	168.63	750.08	81.36	14.24
C1116-177-6750-M	1.116	28.35	0.177	4.50	6.750	171.45	4.593	116.66	4.423	112.34	168.63	750.08	78.18	13.68
C1116-177-7000-M	1.116	28.35	0.177	4.50	7.000	177.80	4.759	120.87	4.581	116.37	168.63	750.08	75.24	13.17
C1116-177-7500-M	1.116	28.35	0.177	4.50	7.500	190.50	5.090	129.29	4.898	124.41	168.63	750.08	69.97	12.24
C1116-177-8000-M	1.116	28.35	0.177	4.50	8.000	203.20	5.421	137.71	5.215	132.45	168.63	750.08	65.40	11.44
C1116-177-8500-M	1.116	28.35	0.177	4.50	8.500	215.90	5.753	146.12	5.531	140.50	168.63	750.08	61.38	10.74
C1116-177-9000-M	1.116	28.35	0.177	4.50	9.000	228.60	6.084	154.54	5.848	148.54	168.63	750.08	57.83	10.12
C1116-177-9500-M	1.116	28.35	0.177	4.50	9.500	241.30	6.416	162.96	6.165	156.59	168.63	750.08	54.67	9.57
C1116-192-1625-M	1.116	28.35	0.192	4.88	1.625	41.28	1.264	32.11	1.261	32.02	210.08	934.50	582.27	101.90
C1116-192-1750-M	1.116	28.35	0.192	4.88	1.750	44.45	1.353	34.36	1.347	34.21	210.08	934.50	528.99	92.57
C1116-192-1875-M	1.116	28.35	0.192	4.88	1.875	47.63	1.442	36.61	1.433	36.41	210.08	934.50	484.64	84.81
C1116-192-2000-M	1.116	28.35	0.192	4.88	2.000	50.80	1.530	38.87	1.520	38.60	210.08	934.50	447.15	78.25
C1116-192-2125-M	1.116	28.35	0.192	4.88	2.125	53.98	1.619	41.12	1.606	40.79	210.08	934.50	415.05	72.63
C1116-192-2250-M	1.116	28.35	0.192	4.88	2.250	57.15	1.707	43.37	1.692	42.99	210.08	934.50	387.25	67.77
C1116-192-2375-M	1.116	28.35	0.192	4.88	2.375	60.33	1.796	45.62	1.779	45.18	210.08	934.50	362.93	63.51
C1116-192-2500-M	1.116	28.35	0.192	4.88	2.500	63.50	1.885	47.87	1.865	47.37	210.08	934.50	341.49	59.76
C1116-192-2625-M	1.116	28.35	0.192	4.88	2.625	66.68	1.973	50.13	1.951	49.57	210.08	934.50	322.45	56.43
C1116-192-2750-M	1.116	28.35	0.192	4.88	2.750	69.85	2.062	52.38	2.038	51.76	210.08	934.50	305.41	53.45
C1116-192-2875-M	1.116	28.35	0.192	4.88	2.875	73.03	2.151	54.63	2.124	53.95	210.08	934.50	290.09	50.76
C1116-192-3000-M	1.116	28.35	0.192	4.88	3.000	76.20	2.239	56.88	2.210	56.15	210.08	934.50	276.22	48.34
C1116-192-3250-M	1.116	28.35	0.192	4.88	3.250	82.55	2.417	61.39	2.383	60.53	210.08	934.50	252.13	44.12
C1116-192-3500-M	1.116	28.35	0.192	4.88	3.500	88.90	2.594	65.89	2.556	64.92	210.08	934.50	231.90	40.58
C1116-192-3750-M	1.116	28.35	0.192	4.88	3.750	95.25	2.771	70.39	2.729	69.31	210.08	934.50	214.68	37.57
C1116-192-4000-M	1.116	28.35	0.192	4.88	4.000	101.60	2.949	74.90	2.901	73.69	210.08	934.50	199.83	34.97
C1116-192-4250-M	1.116	28.35	0.192	4.88	4.250	107.95	3.126	79.40	3.074	78.08	210.08	934.50	186.91	32.71
C1116-192-4500-M	1.116	28.35	0.192	4.88	4.500	114.30	3.303	83.90	3.247	82.47	210.08	934.50	175.56	30.72
C1116-192-4750-M	1.116	28.35	0.192	4.88	4.750	120.65	3.481	88.41	3.419	86.85	210.08	934.50	165.51	28.96
C1116-192-5000-M	1.116	28.35	0.192	4.88	5.000	127.00	3.658	92.91	3.592	91.24	210.08	934.50	156.54	27.40
C1116-192-5250-M	1.116	28.35	0.192	4.88	5.250	133.35	3.835	97.42	3.765	95.63	210.08	934.50	148.50	25.99
C1116-192-5500-M	1.116	28.35	0.192	4.88	5.500	139.70	4.013	101.92	3.938	100.02	210.08	934.50	141.24	24.72
C1116-192-5750-M	1.116	28.35	0.192	4.88	5.750	146.05	4.190	106.42	4.110	104.40	210.08	934.50	134.66	23.57
C1116-192-6000-M	1.116	28.35	0.192	4.88	6.000	152.40	4.367	110.93	4.283	108.79	210.08	934.50	128.67	22.52
C1116-192-6250-M	1.116	28.35	0.192	4.88	6.250	158.75	4.545	115.43	4.456	113.18	210.08	934.50	123.19	21.56
C1116-192-6500-M	1.116	28.35	0.192	4.88	6.500	165.10	4.722	119.94	4.628	117.56	210.08	934.50	118.15	20.68
C1116-192-6750-M	1.116	28.35	0.192	4.88	6.750	171.45	4.899	124.44	4.801	121.95	210.08	934.50	113.51	19.86
C1116-192-7000-M	1.116	28.35	0.192	4.88	7.000	177.80	5.077	128.94	4.974	126.34	210.08	934.50	109.22	19.11
C1116-192-7500-M	1.116	28.35	0.192	4.88	7.500	190.50	5.431	137.95	5.319	135.11	210.08	934.50	101.55	17.77
C1116-192-8000-M	1.116	28.35	0.192	4.88	8.000	203.20	5.786	146.96	5.665	143.89	210.08	934.50	94.88	16.60
C1116-192-8500-M	1.116	28.35	0.192	4.88	8.500	215.90	6.140	155.97	6.010	152.66	210.08	934.50	89.03	15.58
C1116-192-9000-M	1.116	28.35	0.192	4.88	9.000	228.60	6.495	164.97	6.356	161.43	210.08	934.50	83.87	14.68

STAINLESS STEEL

Catalog #	Load Length (L_1)		Load (P) at L_1		Spring Rate (R)	
	in	mm	lb	N	lb/in	N/mm
C1116-177-1750-S	1.353	34.36	123.76	550.52	311.46	54.51
C1116-177-1875-S	1.442	36.63	123.76	550.52	285.86	50.03
C1116-177-2000-S	1.531	38.90	123.76	550.52	264.15	46.23
C1116-177-2125-S	1.621	41.17	123.76	550.52	245.51	42.96
C1116-177-2250-S	1.710	43.44	123.76	550.52	229.32	40.13
C1116-177-2375-S	1.800	45.71	123.76	550.52	215.14	37.65
C1116-177-2500-S	1.889	47.98	123.76	550.52	202.61	35.46
C1116-177-2625-S	1.979	50.26	123.76	550.52	191.46	33.50
C1116-177-2750-S	2.068	52.53	123.76	550.52	181.47	31.76
C1116-177-2875-S	2.157	54.80	123.76	550.52	172.47	30.18
C1116-177-3000-S	2.247	57.07	123.76	550.52	164.32	28.76
C1116-177-3250-S	2.426	61.61	123.76	550.52	150.14	26.27
C1116-177-3500-S	2.605	66.15	123.76	550.52	138.21	24.19
C1116-177-3750-S	2.783	70.70	123.76	550.52	128.03	22.41
C1116-177-4000-S	2.962	75.24	123.76	550.52	119.25	20.87
C1116-177-4250-S	3.141	79.78	123.76	550.52	111.60	19.53
C1116-177-4500-S	3.320	84.32	123.76	550.52	104.87	18.35
C1116-177-4750-S	3.499	88.87	123.76	550.52	98.91	17.31
C1116-177-5000-S	3.678	93.41	123.76	550.52	93.59	16.38
C1116-177-5250-S	3.856	97.95	123.76	550.52	88.81	15.54
C1116-177-5500-S	4.035	102.49	123.76	550.52	84.49	14.79
C1116-177-5750-S	4.214	107.04	123.76	550.52	80.58	14.10
C1116-177-6000-S	4.393	111.58	123.76	550.52	77.01	13.48
C1116-177-6250-S	4.572	116.12	123.76	550.52	73.74	12.91
C1116-177-6500-S	4.751	120.66	123.76	550.52	70.74	12.38
C1116-177-6750-S	4.929	125.21	123.76	550.52	67.98	11.90
C1116-177-7000-S	5.108	129.75	123.76	550.52	65.42	11.45
C1116-177-7500-S	5.466	138.83	123.76	550.52	60.85	10.65
C1116-177-8000-S	5.824	147.92	123.76	550.52	56.87	9.95
C1116-177-8500-S	6.181	157.00	123.76	550.52	53.38	9.34
C1116-177-9000-S	6.539	166.09	123.76	550.52	50.29	8.80
C1116-177-9500-S	6.897	175.17	123.76	550.52	47.54	8.32
C1116-192-1625-S	1.324	33.63	152.43	678.03	506.32	88.61
C1116-192-1750-S	1.419	36.03	152.43	678.03	459.99	80.50
C1116-192-1875-S	1.513	38.44	152.43	678.03	421.43	73.75
C1116-192-2000-S	1.608	40.84	152.43	678.03	388.83	68.05
C1116-192-2125-S	1.703	43.25	152.43	678.03	360.91	63.16
C1116-192-2250-S	1.797	45.65	152.43	678.03	336.74	58.93
C1116-192-2375-S	1.892	48.06	152.43	678.03	315.60	55.23
C1116-192-2500-S	1.987	50.46	152.43	678.03	296.95	51.97
C1116-192-2625-S	2.081	52.87	152.43	678.03	280.39	49.07
C1116-192-2750-S	2.176	55.27	152.43	678.03	265.57	46.48
C1116-192-2875-S	2.271	57.68	152.43	678.03	252.25	44.14
C1116-192-3000-S	2.365	60.08	152.43	678.03	240.19	42.03
C1116-192-3250-S	2.555	64.89	152.43	678.03	219.24	38.37
C1116-192-3500-S	2.744	69.70	152.43	678.03	201.65	35.29
C1116-192-3750-S	2.933	74.51	152.43	678.03	186.68	32.67
C1116-192-4000-S	3.123	79.32	152.43	678.03	173.77	30.41
C1116-192-4250-S	3.312	84.13	152.43	678.03	162.53	28.44
C1116-192-4500-S	3.502	88.94	152.43	678.03	152.66	26.72
C1116-192-4750-S	3.691	93.75	152.43	678.03	143.92	25.19
C1116-192-5000-S	3.880	98.56	152.43	678.03	136.12	23.82
C1116-192-5250-S	4.070	103.37	152.43	678.03	129.13	22.60
C1116-192-5500-S	4.259	108.18	152.43	678.03	122.82	21.49
C1116-192-5750-S	4.448	112.99	152.43	678.03	117.10	20.49
C1116-192-6000-S	4.638	117.80	152.43	678.03	111.89	19.58
C1116-192-6250-S	4.827	122.61	152.43	678.03	107.12	18.75
C1116-192-6500-S	5.016	127.42	152.43	678.03	102.74	17.98
C1116-192-6750-S	5.206	132.22	152.43	678.03	98.70	17.27
C1116-192-7000-S	5.395	137.03	152.43	678.03	94.97	16.62
C1116-192-7500-S	5.774	146.65	152.43	678.03	88.30	15.45
C1116-192-8000-S	6.152	156.27	152.43	678.03	82.50	14.44
C1116-192-8500-S	6.531	165.89	152.43	678.03	77.42	13.55
C1116-192-9000-S	6.910	175.51	152.43	678.03	72.93	12.76

Part Numbers with an "*" are squared and not ground. **Part Numbers in bold** represent the newly expanded Associated Spring RAYMOND compression spring offering.

MUSIC WIRE															STAINLESS STEEL						
Catalog #	Outside Diameter (OD)		Wire Diameter (d)		Free Length (L) Approx		Load Length (L_1)		Solid Height (Sh) Approx		Load (P) at L_1		Spring Rate (R)		Catalog #	Load Length (L_1)		Load (P) at L_1		Spring Rate (R)	
	in	mm	in	mm	in	mm	in	mm	in	mm	lb	N	lb/in	N/mm		in	mm	lb	N	lb/in	N/mm
C1116-192-9500-M	**1.116**	**28.35**	**0.192**	**4.88**	**9.500**	**241.30**	**6.850**	**173.98**	**6.701**	**170.21**	**210.08**	**934.50**	**79.27**	**13.87**	**C1116-192-9500-S**	**7.289**	**185.13**	**152.43**	**678.03**	**68.93**	**12.06**
C1116-207-1625-M	**1.116**	**28.35**	**0.207**	**5.26**	**1.625**	**41.28**	**1.377**	**34.97**	**1.333**	**33.85**	**211.19**	**939.41**	**850.39**	**148.82**	**C1116-207-1625-S**	**1.376**	**34.94**	**184.40**	**820.23**	**739.47**	**129.41**
C1116-207-1750-M	**1.116**	**28.35**	**0.207**	**5.26**	**1.750**	**44.45**	**1.474**	**37.44**	**1.426**	**36.21**	**212.59**	**945.64**	**770.82**	**134.89**	**C1116-207-1750-S**	**1.475**	**37.46**	**184.40**	**820.23**	**670.28**	**117.30**
C1116-207-1875-M	**1.116**	**28.35**	**0.207**	**5.26**	**1.875**	**47.63**	**1.572**	**39.92**	**1.518**	**38.56**	**213.75**	**950.80**	**704.87**	**123.35**	**C1116-207-1875-S**	**1.574**	**39.98**	**184.40**	**820.23**	**612.93**	**107.26**
C1116-207-2000-M	**1.116**	**28.35**	**0.207**	**5.26**	**2.000**	**50.80**	**1.669**	**42.40**	**1.611**	**40.92**	**214.73**	**955.15**	**649.32**	**113.63**	**C1116-207-2000-S**	**1.673**	**42.50**	**184.40**	**820.23**	**564.63**	**98.81**
C1116-207-2125-M	**1.116**	**28.35**	**0.207**	**5.26**	**2.125**	**53.98**	**1.767**	**44.88**	**1.704**	**43.27**	**215.56**	**958.86**	**601.88**	**105.33**	**C1116-207-2125-S**	**1.773**	**45.03**	**184.40**	**820.23**	**523.38**	**91.59**
C1116-207-2250-M	**1.116**	**28.35**	**0.207**	**5.26**	**2.250**	**57.15**	**1.864**	**47.36**	**1.796**	**45.63**	**216.28**	**962.07**	**560.90**	**98.16**	**C1116-207-2250-S**	**1.872**	**47.55**	**184.40**	**820.23**	**487.74**	**85.36**
C1116-207-2375-M	**1.116**	**28.35**	**0.207**	**5.26**	**2.375**	**60.33**	**1.962**	**49.83**	**1.889**	**47.98**	**216.91**	**964.86**	**525.15**	**91.90**	**C1116-207-2375-S**	**1.971**	**50.07**	**184.40**	**820.23**	**456.65**	**79.91**
C1116-207-2500-M	**1.116**	**28.35**	**0.207**	**5.26**	**2.500**	**63.50**	**2.060**	**52.31**	**1.982**	**50.34**	**217.46**	**967.33**	**493.68**	**86.39**	**C1116-207-2500-S**	**2.070**	**52.59**	**184.40**	**820.23**	**429.29**	**75.13**
C1116-207-2625-M	**1.116**	**28.35**	**0.207**	**5.26**	**2.625**	**66.68**	**2.157**	**54.79**	**2.074**	**52.69**	**217.95**	**969.51**	**465.77**	**81.51**	**C1116-207-2625-S**	**2.170**	**55.11**	**184.40**	**820.23**	**405.02**	**70.88**
C1116-207-2750-M	**1.116**	**28.35**	**0.207**	**5.26**	**2.750**	**69.85**	**2.255**	**57.27**	**2.167**	**55.05**	**218.39**	**971.46**	**440.85**	**77.15**	**C1116-207-2750-S**	**2.269**	**57.63**	**184.40**	**820.23**	**383.35**	**67.09**
C1116-207-2875-M	**1.116**	**28.35**	**0.207**	**5.26**	**2.875**	**73.03**	**2.261**	**57.42**	**2.260**	**57.40**	**257.06**	**1143.48**	**418.46**	**73.23**	**C1116-207-2875-S**	**2.368**	**60.15**	**184.40**	**820.23**	**363.88**	**63.68**
C1116-207-3000-M	**1.116**	**28.35**	**0.207**	**5.26**	**3.000**	**76.20**	**2.354**	**59.80**	**2.353**	**59.76**	**257.06**	**1143.48**	**398.23**	**69.69**	**C1116-207-3000-S**	**2.468**	**62.67**	**184.40**	**820.23**	**346.29**	**60.60**
C1116-207-3250-M	**1.116**	**28.35**	**0.207**	**5.26**	**3.250**	**82.55**	**2.542**	**64.57**	**2.538**	**64.47**	**257.06**	**1143.48**	**363.12**	**63.55**	**C1116-207-3250-S**	**2.666**	**67.72**	**184.40**	**820.23**	**315.76**	**55.26**
C1116-207-3500-M	**1.116**	**28.35**	**0.207**	**5.26**	**3.500**	**88.90**	**2.730**	**69.33**	**2.723**	**69.17**	**257.06**	**1143.48**	**333.71**	**58.40**	**C1116-207-3500-S**	**2.865**	**72.76**	**184.40**	**820.23**	**290.18**	**50.78**
C1116-207-3750-M	**1.116**	**28.35**	**0.207**	**5.26**	**3.750**	**95.25**	**2.917**	**74.10**	**2.909**	**73.88**	**257.06**	**1143.48**	**308.70**	**54.02**	**C1116-207-3750-S**	**3.063**	**77.80**	**184.40**	**820.23**	**268.43**	**46.98**
C1116-207-4000-M	**1.116**	**28.35**	**0.207**	**5.26**	**4.000**	**101.60**	**3.105**	**78.86**	**3.094**	**78.59**	**257.06**	**1143.48**	**287.18**	**50.26**	**C1116-207-4000-S**	**3.262**	**82.84**	**184.40**	**820.23**	**249.72**	**43.70**
C1116-207-4250-M	**1.116**	**28.35**	**0.207**	**5.26**	**4.250**	**107.95**	**3.292**	**83.63**	**3.280**	**83.30**	**257.06**	**1143.48**	**268.46**	**46.98**	**C1116-207-4250-S**	**3.460**	**87.89**	**184.40**	**820.23**	**233.45**	**40.85**
C1116-207-4500-M	**1.116**	**28.35**	**0.207**	**5.26**	**4.500**	**114.30**	**3.480**	**88.39**	**3.465**	**88.01**	**257.06**	**1143.48**	**252.04**	**44.11**	**C1116-207-4500-S**	**3.659**	**92.93**	**184.40**	**820.23**	**219.16**	**38.35**
C1116-207-4750-M	**1.116**	**28.35**	**0.207**	**5.26**	**4.750**	**120.65**	**3.668**	**93.16**	**3.650**	**92.72**	**257.06**	**1143.48**	**237.51**	**41.56**	**C1116-207-4750-S**	**3.857**	**97.97**	**184.40**	**820.23**	**206.53**	**36.14**
C1116-207-5000-M	**1.116**	**28.35**	**0.207**	**5.26**	**5.000**	**127.00**	**3.855**	**97.92**	**3.836**	**97.43**	**257.06**	**1143.48**	**224.56**	**39.30**	**C1116-207-5000-S**	**4.056**	**103.01**	**184.40**	**820.23**	**195.27**	**34.17**
C1116-207-5250-M	**1.116**	**28.35**	**0.207**	**5.26**	**5.250**	**133.35**	**4.043**	**102.69**	**4.021**	**102.14**	**257.06**	**1143.48**	**212.95**	**37.27**	**C1116-207-5250-S**	**4.254**	**108.06**	**184.40**	**820.23**	**185.17**	**32.41**
C1116-207-5500-M	**1.116**	**28.35**	**0.207**	**5.26**	**5.500**	**139.70**	**4.230**	**107.45**	**4.207**	**106.85**	**257.06**	**1143.48**	**202.48**	**35.43**	**C1116-207-5500-S**	**4.453**	**113.10**	**184.40**	**820.23**	**176.07**	**30.81**
C1116-207-5750-M	**1.116**	**28.35**	**0.207**	**5.26**	**5.750**	**146.05**	**4.418**	**112.22**	**4.392**	**111.56**	**257.06**	**1143.48**	**193.00**	**33.77**	**C1116-207-5750-S**	**4.651**	**118.14**	**184.40**	**820.23**	**167.82**	**29.37**
C1116-207-6000-M	**1.116**	**28.35**	**0.207**	**5.26**	**6.000**	**152.40**	**4.606**	**116.98**	**4.578**	**116.27**	**257.06**	**1143.48**	**184.36**	**32.26**	**C1116-207-6000-S**	**4.850**	**123.18**	**184.40**	**820.23**	**160.31**	**28.05**
C1116-207-6250-M	**1.116**	**28.35**	**0.207**	**5.26**	**6.250**	**158.75**	**4.793**	**121.75**	**4.763**	**120.98**	**257.06**	**1143.48**	**176.46**	**30.88**	**C1116-207-6250-S**	**5.048**	**128.23**	**184.40**	**820.23**	**153.44**	**26.85**
C1116-207-6500-M	**1.116**	**28.35**	**0.207**	**5.26**	**6.500**	**165.10**	**4.981**	**126.51**	**4.948**	**125.69**	**257.06**	**1143.48**	**169.21**	**29.61**	**C1116-207-6500-S**	**5.247**	**133.27**	**184.40**	**820.23**	**147.14**	**25.75**
C1116-207-6750-M	**1.116**	**28.35**	**0.207**	**5.26**	**6.750**	**171.45**	**5.168**	**131.28**	**5.134**	**130.40**	**257.06**	**1143.48**	**162.54**	**28.44**	**C1116-207-6750-S**	**5.445**	**138.31**	**184.40**	**820.23**	**141.33**	**24.73**
C1116-207-7000-M	**1.116**	**28.35**	**0.207**	**5.26**	**7.000**	**177.80**	**5.356**	**136.04**	**5.319**	**135.11**	**257.06**	**1143.48**	**156.37**	**27.36**	**C1116-207-7000-S**	**5.644**	**143.35**	**184.40**	**820.23**	**135.97**	**23.79**
C1116-207-7500-M	**1.116**	**28.35**	**0.207**	**5.26**	**7.500**	**190.50**	**5.731**	**145.57**	**5.690**	**144.53**	**257.06**	**1143.48**	**145.33**	**25.43**	**C1116-207-7500-S**	**6.041**	**153.44**	**184.40**	**820.23**	**126.38**	**22.12**
C1116-207-8000-M	**1.116**	**28.35**	**0.207**	**5.26**	**8.000**	**203.20**	**6.106**	**155.10**	**6.061**	**153.94**	**257.06**	**1143.48**	**135.75**	**23.76**	**C1116-207-8000-S**	**6.438**	**163.52**	**184.40**	**820.23**	**118.05**	**20.66**
C1116-207-8500-M	**1.116**	**28.35**	**0.207**	**5.26**	**8.500**	**215.90**	**6.482**	**164.63**	**6.432**	**163.36**	**257.06**	**1143.48**	**127.36**	**22.29**	**C1116-207-8500-S**	**6.835**	**173.61**	**184.40**	**820.23**	**110.75**	**19.38**
C1116-207-9000-M	**1.116**	**28.35**	**0.207**	**5.26**	**9.000**	**228.60**	**6.857**	**174.16**	**6.802**	**172.78**	**257.06**	**1143.48**	**119.94**	**20.99**	**C1116-207-9000-S**	**7.232**	**183.69**	**184.40**	**820.23**	**104.30**	**18.25**
C1116-207-9500-M	**1.116**	**28.35**	**0.207**	**5.26**	**9.500**	**241.30**	**7.232**	**183.69**	**7.173**	**182.20**	**257.06**	**1143.48**	**113.34**	**19.83**	**C1116-207-9500-S**	**7.629**	**193.78**	**184.40**	**820.23**	**98.56**	**17.25**
D13580	1.142	29.00	0.157	4.00	1.614	41.00	0.902	22.90	0.866	22.00	191.58	852.20	272.34	47.66	D23580	0.902	22.90	159.65	710.17	226.86	39.70
D13590	1.142	29.00	0.157	4.00	2.382	60.50	1.268	32.20	1.181	30.00	191.58	852.20	173.14	30.30	D23590	1.268	32.20	159.65	710.17	144.23	25.24
D13600	1.142	29.00	0.157	4.00	3.524	89.50	1.811	46.00	1.654	42.00	191.58	852.20	112.06	19.61	D23600	1.811	46.00	159.65	710.17	93.37	16.34
D13610	1.142	29.00	0.157	4.00	5.118	130.00	2.539	64.50	2.283	58.00	191.58	852.20	76.23	13.34	D23610	2.539	64.50	159.65	710.17	63.49	11.11
D13620	1.142	29.00	0.157	4.00	7.283	185.00	3.626	92.10	3.228	82.00	191.58	852.20	51.54	9.02	D23620	3.626	92.10	159.65	710.17	42.91	7.51
C1175-092-2125-M	**1.175**	**29.85**	**0.092**	**2.34**	**2.125**	**53.98**	**0.794**	**20.17**	**0.587**	**14.91**	**26.46**	**117.69**	**19.88**	**3.48**	**C1175-092-2125-S**	**0.929**	**23.59**	**20.68**	**91.97**	**17.29**	**3.03**
C1175-092-2250-M	**1.175**	**29.85**	**0.092**	**2.34**	**2.250**	**57.15**	**0.833**	**21.17**	**0.613**	**15.56**	**26.46**	**117.69**	**18.68**	**3.27**	**C1175-092-2250-S**	**0.977**	**24.81**	**20.68**	**91.97**	**16.24**	**2.84**
C1175-092-2375-M	**1.175**	**29.85**	**0.092**	**2.34**	**2.375**	**60.33**	**0.873**	**22.17**	**0.638**	**16.20**	**26.46**	**117.69**	**17.61**	**3.08**	**C1175-092-2375-S**	**1.025**	**26.03**	**20.68**	**91.97**	**15.31**	**2.68**
C1175-092-2500-M	**1.175**	**29.85**	**0.092**	**2.34**	**2.500**	**63.50**	**0.912**	**23.16**	**0.663**	**16.85**	**26.46**	**117.69**	**16.66**	**2.92**	**C1175-092-2500-S**	**1.073**	**27.25**	**20.68**	**91.97**	**14.49**	**2.54**
C1175-092-2625-M	**1.175**	**29.85**	**0.092**	**2.34**	**2.625**	**66.68**	**0.951**	**24.16**	**0.689**	**17.49**	**26.46**	**117.69**	**15.81**	**2.77**	**C1175-092-2625-S**	**1.121**	**28.47**	**20.68**	**91.97**	**13.75**	**2.41**
C1175-092-2750-M	**1.175**	**29.85**	**0.092**	**2.34**	**2.750**	**69.85**	**0.991**	**25.16**	**0.714**	**18.14**	**26.46**	**117.69**	**15.04**	**2.63**	**C1175-092-2750-S**	**1.169**	**29.69**	**20.68**	**91.97**	**13.08**	**2.29**
C1175-092-2875-M	**1.175**	**29.85**	**0.092**	**2.34**	**2.875**	**73.03**	**1.030**	**26.16**	**0.739**	**18.78**	**26.46**	**117.69**	**14.34**	**2.51**	**C1175-092-2875-S**	**1.217**	**30.91**	**20.68**	**91.97**	**12.47**	**2.18**
C1175-092-3000-M	**1.175**	**29.85**	**0.092**	**2.34**	**3.000**	**76.20**	**1.069**	**27.16**	**0.765**	**19.43**	**26.46**	**117.69**	**13.70**	**2.40**	**C1175-092-3000-S**	**1.265**	**32.12**	**20.68**	**91.97**	**11.92**	**2.09**
C1175-092-3250-M	**1.175**	**29.85**	**0.092**	**2.34**	**3.250**	**82.55**	**1.148**	**29.15**	**0.816**	**20.71**	**26.46**	**117.69**	**12.59**	**2.20**	**C1175-092-3250-S**	**1.361**	**34.56**	**20.68**	**91.97**	**10.94**	**1.92**
C1175-092-3500-M	**1.175**	**29.85**	**0.092**	**2.34**	**3.500**	**88.90**	**1.226**	**31.15**	**0.866**	**22.00**	**26.46**	**117.69**	**11.64**	**2.04**	**C1175-092-3500-S**	**1.457**	**37.00**	**20.68**	**91.97**	**10.12**	**1.77**
C1175-092-3750-M	**1.175**	**29.85**	**0.092**	**2.34**	**3.750**	**95.25**	**1.305**	**33.14**	**0.917**	**23.29**	**26.46**	**117.69**	**10.82**	**1.89**	**C1175-092-3750-S**	**1.553**	**39.44**	**20.68**	**91.97**	**9.41**	**1.65**
C1175-092-4000-M	**1.175**	**29.85**	**0.092**	**2.34**	**4.000**	**101.60**	**1.383**	**35.14**	**0.968**	**24.58**	**26.46**	**117.69**	**10.11**	**1.77**	**C1175-092-4000-S**	**1.649**	**41.87**	**20.68**	**91.97**	**8.79**	**1.54**
C1175-092-4250-M	**1.175**	**29.85**	**0.092**	**2.34**	**4.250**	**107.95**	**1.462**	**37.13**	**1.018**	**25.87**	**26.46**	**117.69**	**9.49**	**1.66**	**C1175-092-4250-S**	**1.744**	**44.31**	**20.68**	**91.97**	**8.25**	**1.44**
C1175-092-4500-M	**1.175**	**29.85**	**0.092**	**2.34**	**4.500**	**114.30**	**1.541**	**39.13**	**1.069**	**27.16**	**26.46**	**117.69**	**8.94**	**1.56**	**C1175-092-4500-S**	**1.840**	**46.75**	**20.68**	**91.97**	**7.77**	**1.36**
C1175-092-4750-M	**1.175**	**29.85**	**0.092**	**2.34**	**4.750**	**120.65**	**1.619**	**41.13**	**1.120**	**28.45**	**26.46**	**117.69**	**8.45**	**1.48**	**C1175-092-4750-S**	**1.936**	**49.18**	**20.68**	**91.97**	**7.35**	**1.29**
C1175-092-5000-M	**1.175**	**29.85**	**0.092**	**2.34**	**5.000**	**127.00**	**1.698**	**43.12**	**1.171**	**29.74**	**26.46**	**117.69**	**8.01**	**1.40**	**C1175-092-5000-S**	**2.032**	**51.62**	**20.68**	**91.97**	**6.97**	**1.22**
C1175-092-5250-M	**1.175**	**29.85**	**0.092**	**2.34**	**5.250**	**133.35**	**1.776**	**45.12**	**1.221**	**31.03**	**26.46**	**117.69**	**7.62**	**1.33**	**C1175-092-5250-S**	**2.128**	**54.06**	**20.68**	**91.97**	**6.62**	**1.16**
C1175-092-5500-M	**1.175**	**29.85**	**0.092**	**2.34**	**5.500**	**139.70**	**1.855**	**47.11**	**1.272**	**32.31**	**26.46**	**117.69**	**7.26**	**1.27**	**C1175-092-5500-S**	**2.224**	**56.49**	**20.68**	**91.97**	**6.31**	**1.10**
C1175-092-5750-M	**1.175**	**29.85**	**0.092**	**2.34**	**5.750**	**146.05**	**1.933**	**49.11**	**1.323**	**33.60**	**26.46**	**117.69**	**6.93**	**1.21**	**C1175-092-5750-S**	**2.320**	**58.93**	**20.68**	**91.97**	**6.03**	**1.05**
C1175-092-6000-M	**1.175**	**29.85**	**0.092**	**2.34**	**6.000**	**152.40**	**2.012**	**51.11**	**1.374**	**34.89**	**26.46**	**117.69**	**6.63**	**1.16**	**C1175-092-6000-S**	**2.416**	**61.37**	**20.68**	**91.97**	**5.77**	**1.01**
C1175-092-6250-M	**1.175**	**29.85**	**0.092**	**2.34**	**6.250**	**158.75**	**2.091**	**53.10**	**1.424**	**36.18**	**26.46**	**117.69**	**6.36**	**1.11**	**C1175-092-6250-S**	**2.512**	**63.81**	**20.68**	**91.97**	**5.53**	**0.97**
C1175-092-6500-M	**1.175**	**29.85**	**0.092**	**2.34**	**6.500**	**165.10**	**2.169**	**55.10**	**1.475**	**37.47**	**26.46**	**117.69**	**6.11**	**1.07**	**C1175-092-6500-S**	**2.608**	**66.24**	**20.68**	**91.97**	**5.31**	**0.93**
C1175-092-6750-M	**1.175**	**29.85**	**0.092**	**2.34**	**6.750**	**171.45**	**2.248**	**57.09**	**1.526**	**38.76**	**26.46**	**117.69**	**5.88**	**1.03**	**C1175-092-6750-S**	**2.704**	**68.68**	**20.68**	**91.97**	**5.11**	**0.89**
C1175-092-7000-M	**1.175**	**29.85**	**0.092**	**2.34**	**7.000**	**177.80**	**2.326**	**59.09**	**1.577**	**40.05**	**26.46**	**117.69**	**5.66**	**0.99**	**C1175-092-7000-S**	**2.800**	**71.12**	**20.68**	**91.97**	**4.92**	**0.86**
C1175-092-7500-M	**1.175**	**29.85**	**0.092**	**2.34**	**7.500**	**190.50**	**2.484**	**63.08**	**1.678**	**42.63**	**26.46**	**117.69**	**5.27**	**0.92**	**C1175-092-7500-S**	**2.992**	**75.99**	**20.68**	**91.97**	**4.59**	**0.80**

FOR INFORMATION ON ALTERNATIVE FINISHES, SEE PAGE 311

Part Numbers with an "*" are squared and not ground. **Part Numbers in bold** represent the newly expanded Associated Spring RAYMOND compression spring offering.

MUSIC WIRE															STAINLESS STEEL					
Catalog #	Outside Diameter (OD)		Wire Diameter (d)		Free Length (L) Approx		Load Length (L_1)		Solid Height (Sh) Approx		Load (P) at L_1		Spring Rate (R)		Catalog #	Load Length (L_1)		Load (P) at L_1		Spring Rate (R)	
	in	mm	in	mm	in	mm	in	mm	in	mm	lb	N	lb/in	N/mm		in	mm	lb	N	lb/in	N/mm
C1175-092-8000-M	1.175	29.85	0.092	2.34	8.000	203.20	2.641	67.07	1.780	45.20	26.46	117.69	4.94	0.86	**C1175-092-8000-S**	3.184	80.86	20.68	91.97	4.29	0.75
C1175-092-8500-M	1.175	29.85	0.092	2.34	8.500	215.90	2.798	71.06	1.881	47.78	26.46	117.69	4.64	0.81	**C1175-092-8500-S**	3.376	85.74	20.68	91.97	4.04	0.71
C1175-092-9000-M	1.175	29.85	0.092	2.34	9.000	228.60	2.955	75.06	1.983	50.36	26.46	117.69	4.38	0.77	**C1175-092-9000-S**	3.567	90.61	20.68	91.97	3.81	0.67
C1175-092-9500-M	1.175	29.85	0.092	2.34	9.500	241.30	3.112	79.05	2.084	52.94	26.46	117.69	4.14	0.72	**C1175-092-9500-S**	3.759	95.49	20.68	91.97	3.60	0.63
C1175-098-2000-M	1.175	29.85	0.098	2.49	2.000	50.80	0.802	20.38	0.620	15.76	31.55	140.33	26.34	4.61	**C1175-098-2000-S**	0.928	23.57	24.56	109.23	22.90	4.01
C1175-098-2125-M	1.175	29.85	0.098	2.49	2.125	53.98	0.844	21.44	0.649	16.49	31.55	140.33	24.63	4.31	**C1175-098-2125-S**	0.979	24.85	24.56	109.23	21.42	3.75
C1175-098-2250-M	1.175	29.85	0.098	2.49	2.250	57.15	0.886	22.51	0.678	17.22	31.55	140.33	23.13	4.05	**C1175-098-2250-S**	1.029	26.14	24.56	109.23	20.12	3.52
C1175-098-2375-M	1.175	29.85	0.098	2.49	2.375	60.33	0.928	23.58	0.707	17.95	31.55	140.33	21.81	3.82	**C1175-098-2375-S**	1.080	27.43	24.56	109.23	18.96	3.32
C1175-098-2500-M	1.175	29.85	0.098	2.49	2.500	63.50	0.970	24.65	0.735	18.68	31.55	140.33	20.62	3.61	**C1175-098-2500-S**	1.131	28.72	24.56	109.23	17.93	3.14
C1175-098-2625-M	1.175	29.85	0.098	2.49	2.625	66.68	1.012	25.71	0.764	19.41	31.55	140.33	19.56	3.42	**C1175-098-2625-S**	1.181	30.01	24.56	109.23	17.01	2.98
C1175-098-2750-M	1.175	29.85	0.098	2.49	2.750	69.85	1.054	26.78	0.793	20.14	31.55	140.33	18.60	3.26	**C1175-098-2750-S**	1.232	31.29	24.56	109.23	16.18	2.83
C1175-098-2875-M	1.175	29.85	0.098	2.49	2.875	73.03	1.096	27.85	0.822	20.87	31.55	140.33	17.74	3.10	**C1175-098-2875-S**	1.283	32.58	24.56	109.23	15.42	2.70
C1175-098-3000-M	1.175	29.85	0.098	2.49	3.000	76.20	1.138	28.91	0.850	21.60	31.55	140.33	16.95	2.97	**C1175-098-3000-S**	1.333	33.87	24.56	109.23	14.74	2.58
C1175-098-3250-M	1.175	29.85	0.098	2.49	3.250	82.55	1.222	31.05	0.908	23.06	31.55	140.33	15.56	2.72	**C1175-098-3250-S**	1.435	36.45	24.56	109.23	13.53	2.37
C1175-098-3500-M	1.175	29.85	0.098	2.49	3.500	88.90	1.306	33.18	0.965	24.52	31.55	140.33	14.38	2.52	**C1175-098-3500-S**	1.536	39.02	24.56	109.23	12.51	2.19
C1175-098-3750-M	1.175	29.85	0.098	2.49	3.750	95.25	1.390	35.32	1.023	25.98	31.55	140.33	13.37	2.34	**C1175-098-3750-S**	1.638	41.60	24.56	109.23	11.63	2.03
C1175-098-4000-M	1.175	29.85	0.098	2.49	4.000	101.60	1.474	37.45	1.080	27.44	31.55	140.33	12.49	2.19	**C1175-098-4000-S**	1.739	44.17	24.56	109.23	10.86	1.90
C1175-098-4250-M	1.175	29.85	0.098	2.49	4.250	107.95	1.558	39.58	1.138	28.90	31.55	140.33	11.72	2.05	**C1175-098-4250-S**	1.841	46.75	24.56	109.23	10.19	1.78
C1175-098-4500-M	1.175	29.85	0.098	2.49	4.500	114.30	1.642	41.72	1.195	30.35	31.55	140.33	11.04	1.93	**C1175-098-4500-S**	1.942	49.33	24.56	109.23	9.60	1.68
C1175-098-4750-M	1.175	29.85	0.098	2.49	4.750	120.65	1.726	43.85	1.253	31.81	31.55	140.33	10.43	1.83	**C1175-098-4750-S**	2.043	51.90	24.56	109.23	9.07	1.59
C1175-098-5000-M	1.175	29.85	0.098	2.49	5.000	127.00	1.810	45.99	1.310	33.27	31.55	140.33	9.89	1.73	**C1175-098-5000-S**	2.145	54.48	24.56	109.23	8.60	1.51
C1175-098-5250-M	1.175	29.85	0.098	2.49	5.250	133.35	1.894	48.12	1.367	34.73	31.55	140.33	9.40	1.65	**C1175-098-5250-S**	2.246	57.05	24.56	109.23	8.18	1.43
C1175-098-5500-M	1.175	29.85	0.098	2.49	5.500	139.70	1.979	50.25	1.425	36.19	31.55	140.33	8.96	1.57	**C1175-098-5500-S**	2.348	59.63	24.56	109.23	7.79	1.36
C1175-098-5750-M	1.175	29.85	0.098	2.49	5.750	146.05	2.063	52.39	1.482	37.65	31.55	140.33	8.56	1.50	**C1175-098-5750-S**	2.449	62.21	24.56	109.23	7.44	1.30
C1175-098-6000-M	1.175	29.85	0.098	2.49	6.000	152.40	2.147	54.52	1.540	39.11	31.55	140.33	8.19	1.43	**C1175-098-6000-S**	2.550	64.78	24.56	109.23	7.12	1.25
C1175-098-6250-M	1.175	29.85	0.098	2.49	6.250	158.75	2.231	56.66	1.597	40.57	31.55	140.33	7.85	1.37	**C1175-098-6250-S**	2.652	67.36	24.56	109.23	6.83	1.19
C1175-098-6500-M	1.175	29.85	0.098	2.49	6.500	165.10	2.315	58.79	1.655	42.03	31.55	140.33	7.54	1.32	**C1175-098-6500-S**	2.753	69.93	24.56	109.23	6.55	1.15
C1175-098-6750-M	1.175	29.85	0.098	2.49	6.750	171.45	2.399	60.92	1.712	43.49	31.55	140.33	7.25	1.27	**C1175-098-6750-S**	2.855	72.51	24.56	109.23	6.30	1.10
C1175-098-7000-M	1.175	29.85	0.098	2.49	7.000	177.80	2.483	63.06	1.770	44.95	31.55	140.33	6.98	1.22	**C1175-098-7000-S**	2.956	75.09	24.56	109.23	6.07	1.06
C1175-098-7500-M	1.175	29.85	0.098	2.49	7.500	190.50	2.651	67.33	1.885	47.87	31.55	140.33	6.51	1.14	**C1175-098-7500-S**	3.159	80.24	24.56	109.23	5.66	0.99
C1175-098-8000-M	1.175	29.85	0.098	2.49	8.000	203.20	2.819	71.59	2.000	50.79	31.55	140.33	6.09	1.07	**C1175-098-8000-S**	3.362	85.39	24.56	109.23	5.29	0.93
C1175-098-8500-M	1.175	29.85	0.098	2.49	8.500	215.90	2.987	75.86	2.114	53.71	31.55	140.33	5.72	1.00	**C1175-098-8500-S**	3.565	90.54	24.56	109.23	4.98	0.87
C1175-098-9000-M	1.175	29.85	0.098	2.49	9.000	228.60	3.155	80.13	2.229	56.63	31.55	140.33	5.40	0.94	**C1175-098-9000-S**	3.767	95.69	24.56	109.23	4.69	0.82
C1175-098-9500-M	1.175	29.85	0.098	2.49	9.500	241.30	3.323	84.40	2.344	59.55	31.55	140.33	5.11	0.89	**C1175-098-9500-S**	3.970	100.85	24.56	109.23	4.44	0.78
C1175-105-2000-M	1.175	29.85	0.105	2.67	2.000	50.80	0.859	21.81	0.690	17.53	38.22	170.01	33.49	5.86	**C1175-105-2000-S**	0.983	24.97	29.61	131.71	29.12	5.10
C1175-105-2125-M	1.175	29.85	0.105	2.67	2.125	53.98	0.904	22.96	0.723	18.36	38.22	170.01	31.30	5.48	**C1175-105-2125-S**	1.037	26.34	29.61	131.71	27.22	4.76
C1175-105-2250-M	1.175	29.85	0.105	2.67	2.250	57.15	0.949	24.11	0.756	19.19	38.22	170.01	29.38	5.14	**C1175-105-2250-S**	1.091	27.71	29.61	131.71	25.55	4.47
C1175-105-2375-M	1.175	29.85	0.105	2.67	2.375	60.33	0.995	25.26	0.788	20.03	38.22	170.01	27.69	4.85	**C1175-105-2375-S**	1.145	29.09	29.61	131.71	24.08	4.21
C1175-105-2500-M	1.175	29.85	0.105	2.67	2.500	63.50	1.040	26.41	0.821	20.86	38.22	170.01	26.18	4.58	**C1175-105-2500-S**	1.199	30.46	29.61	131.71	22.76	3.98
C1175-105-2625-M	1.175	29.85	0.105	2.67	2.625	66.68	1.085	27.56	0.854	21.69	38.22	170.01	24.82	4.34	**C1175-105-2625-S**	1.253	31.83	29.61	131.71	21.58	3.78
C1175-105-2750-M	1.175	29.85	0.105	2.67	2.750	69.85	1.130	28.71	0.887	22.53	38.22	170.01	23.60	4.13	**C1175-105-2750-S**	1.307	33.20	29.61	131.71	20.52	3.59
C1175-105-2875-M	1.175	29.85	0.105	2.67	2.875	73.03	1.176	29.86	0.920	23.36	38.22	170.01	22.49	3.94	**C1175-105-2875-S**	1.361	34.57	29.61	131.71	19.56	3.42
C1175-105-3000-M	1.175	29.85	0.105	2.67	3.000	76.20	1.221	31.01	0.952	24.19	38.22	170.01	21.48	3.76	**C1175-105-3000-S**	1.415	35.94	29.61	131.71	18.68	3.27
C1175-105-3250-M	1.175	29.85	0.105	2.67	3.250	82.55	1.312	33.32	1.018	25.86	38.22	170.01	19.72	3.45	**C1175-105-3250-S**	1.523	38.69	29.61	131.71	17.15	3.00
C1175-105-3500-M	1.175	29.85	0.105	2.67	3.500	88.90	1.402	35.62	1.084	27.52	38.22	170.01	18.22	3.19	**C1175-105-3500-S**	1.631	41.43	29.61	131.71	15.84	2.77
C1175-105-3750-M	1.175	29.85	0.105	2.67	3.750	95.25	1.493	37.92	1.149	29.19	38.22	170.01	16.93	2.96	**C1175-105-3750-S**	1.739	44.17	29.61	131.71	14.72	2.58
C1175-105-4000-M	1.175	29.85	0.105	2.67	4.000	101.60	1.583	40.22	1.215	30.86	38.22	170.01	15.82	2.77	**C1175-105-4000-S**	1.847	46.91	29.61	131.71	13.75	2.41
C1175-105-4250-M	1.175	29.85	0.105	2.67	4.250	107.95	1.674	42.52	1.280	32.52	38.22	170.01	14.84	2.60	**C1175-105-4250-S**	1.955	49.66	29.61	131.71	12.90	2.26
C1175-105-4500-M	1.175	29.85	0.105	2.67	4.500	114.30	1.765	44.82	1.346	34.19	38.22	170.01	13.97	2.45	**C1175-105-4500-S**	2.063	52.40	29.61	131.71	12.15	2.13
C1175-105-4750-M	1.175	29.85	0.105	2.67	4.750	120.65	1.855	47.12	1.412	35.85	38.22	170.01	13.20	2.31	**C1175-105-4750-S**	2.171	55.14	29.61	131.71	11.48	2.01
C1175-105-5000-M	1.175	29.85	0.105	2.67	5.000	127.00	1.946	49.42	1.477	37.52	38.22	170.01	12.51	2.19	**C1175-105-5000-S**	2.279	57.88	29.61	131.71	10.88	1.90
C1175-105-5250-M	1.175	29.85	0.105	2.67	5.250	133.35	2.036	51.72	1.543	39.18	38.22	170.01	11.89	2.08	**C1175-105-5250-S**	2.387	60.63	29.61	131.71	10.34	1.81
C1175-105-5500-M	1.175	29.85	0.105	2.67	5.500	139.70	2.127	54.02	1.608	40.85	38.22	170.01	11.33	1.98	**C1175-105-5500-S**	2.495	63.37	29.61	131.71	9.85	1.72
C1175-105-5750-M	1.175	29.85	0.105	2.67	5.750	146.05	2.218	56.33	1.674	42.52	38.22	170.01	10.82	1.89	**C1175-105-5750-S**	2.603	66.11	29.61	131.71	9.41	1.65
C1175-105-6000-M	1.175	29.85	0.105	2.67	6.000	152.40	2.308	58.63	1.739	44.18	38.22	170.01	10.35	1.81	**C1175-105-6000-S**	2.711	68.85	29.61	131.71	9.00	1.58
C1175-105-6250-M	1.175	29.85	0.105	2.67	6.250	158.75	2.399	60.93	1.805	45.85	38.22	170.01	9.92	1.74	**C1175-105-6250-S**	2.819	71.60	29.61	131.71	8.63	1.51
C1175-105-6500-M	1.175	29.85	0.105	2.67	6.500	165.10	2.489	63.23	1.871	47.51	38.22	170.01	9.53	1.67	**C1175-105-6500-S**	2.927	74.34	29.61	131.71	8.29	1.45
C1175-105-6750-M	1.175	29.85	0.105	2.67	6.750	171.45	2.580	65.53	1.936	49.18	38.22	170.01	9.17	1.60	**C1175-105-6750-S**	3.035	77.08	29.61	131.71	7.97	1.39
C1175-105-7000-M	1.175	29.85	0.105	2.67	7.000	177.80	2.671	67.83	2.002	50.85	38.22	170.01	8.83	1.54	**C1175-105-7000-S**	3.143	79.83	29.61	131.71	7.68	1.34
C1175-105-7500-M	1.175	29.85	0.105	2.67	7.500	190.50	2.852	72.43	2.133	54.18	38.22	170.01	8.22	1.44	**C1175-105-7500-S**	3.359	85.31	29.61	131.71	7.15	1.25
C1175-105-8000-M	1.175	29.85	0.105	2.67	8.000	203.20	3.033	77.04	2.264	57.51	38.22	170.01	7.70	1.35	**C1175-105-8000-S**	3.575	90.80	29.61	131.71	6.69	1.17
C1175-105-8500-M*	1.175	29.85	0.105	2.67	8.500	215.90	3.281	83.34	2.478	62.94	38.22	170.01	7.32	1.28	**C1175-105-8500-S***	3.850	97.80	29.61	131.71	6.37	1.11
C1175-105-9000-M*	1.175	29.85	0.105	2.67	9.000	228.60	3.462	87.94	2.609	66.27	38.22	170.01	6.90	1.21	**C1175-105-9000-S***	4.066	103.28	29.61	131.71	6.00	1.05
C1175-105-9500-M*	1.175	29.85	0.105	2.67	9.500	241.30	3.643	92.54	2.740	69.61	38.22	170.01	6.53	1.14	**C1175-105-9500-S***	4.282	108.77	29.61	131.71	5.68	0.99

Part Numbers with an "*" are squared and not ground. **Part Numbers in bold** represent the newly expanded Associated Spring RAYMOND compression spring offering.

MUSIC WIRE														
Catalog #	Outside Diameter (OD)		Wire Diameter (d)		Free Length (L) Approx		Load Length (L_1)		Solid Height (Sh) Approx		Load (P) at L_1		Spring Rate (R)	
	in	mm	in	mm	in	mm	in	mm	in	mm	lb	N	lb/in	N/mm
C1175-112-1875-M	1.175	29.85	0.112	2.85	1.875	47.63	0.867	22.02	0.723	18.38	45.72	203.37	45.35	7.94
C1175-112-2000-M	1.175	29.85	0.112	2.85	2.000	50.80	0.916	23.26	0.760	19.32	45.72	203.37	42.16	7.38
C1175-112-2125-M	1.175	29.85	0.112	2.85	2.125	53.98	0.964	24.49	0.797	20.25	45.72	203.37	39.39	6.89
C1175-112-2250-M	1.175	29.85	0.112	2.85	2.250	57.15	1.013	25.73	0.834	21.19	45.72	203.37	36.96	6.47
C1175-112-2375-M	1.175	29.85	0.112	2.85	2.375	60.33	1.062	26.97	0.871	22.13	45.72	203.37	34.81	6.09
C1175-112-2500-M	1.175	29.85	0.112	2.85	2.500	63.50	1.110	28.20	0.908	23.07	45.72	203.37	32.90	5.76
C1175-112-2625-M	1.175	29.85	0.112	2.85	2.625	66.68	1.159	29.44	0.945	24.01	45.72	203.37	31.19	5.46
C1175-112-2750-M	1.175	29.85	0.112	2.85	2.750	69.85	1.208	30.67	0.982	24.95	45.72	203.37	29.64	5.19
C1175-112-2875-M	1.175	29.85	0.112	2.85	2.875	73.03	1.256	31.91	1.019	25.89	45.72	203.37	28.25	4.94
C1175-112-3000-M	1.175	29.85	0.112	2.85	3.000	76.20	1.305	33.15	1.056	26.83	45.72	203.37	26.97	4.72
C1175-112-3250-M	1.175	29.85	0.112	2.85	3.250	82.55	1.402	35.62	1.130	28.71	45.72	203.37	24.75	4.33
C1175-112-3500-M	1.175	29.85	0.112	2.85	3.500	88.90	1.500	38.09	1.204	30.58	45.72	203.37	22.86	4.00
C1175-112-3750-M	1.175	29.85	0.112	2.85	3.750	95.25	1.597	40.57	1.278	32.46	45.72	203.37	21.24	3.72
C1175-112-4000-M	1.175	29.85	0.112	2.85	4.000	101.60	1.694	43.04	1.352	34.34	45.72	203.37	19.83	3.47
C1175-112-4250-M	1.175	29.85	0.112	2.85	4.250	107.95	1.792	45.51	1.426	36.22	45.72	203.37	18.60	3.25
C1175-112-4500-M	1.175	29.85	0.112	2.85	4.500	114.30	1.889	47.98	1.500	38.10	45.72	203.37	17.51	3.06
C1175-112-4750-M	1.175	29.85	0.112	2.85	4.750	120.65	1.986	50.46	1.574	39.97	45.72	203.37	16.54	2.90
C1175-112-5000-M	1.175	29.85	0.112	2.85	5.000	127.00	2.084	52.93	1.648	41.85	45.72	203.37	15.68	2.74
C1175-112-5250-M	1.175	29.85	0.112	2.85	5.250	133.35	2.181	55.40	1.722	43.73	45.72	203.37	14.90	2.61
C1175-112-5500-M	1.175	29.85	0.112	2.85	5.500	139.70	2.279	57.88	1.796	45.61	45.72	203.37	14.19	2.48
C1175-112-5750-M	1.175	29.85	0.112	2.85	5.750	146.05	2.376	60.35	1.870	47.49	45.72	203.37	13.55	2.37
C1175-112-6000-M	1.175	29.85	0.112	2.85	6.000	152.40	2.473	62.82	1.943	49.36	45.72	203.37	12.96	2.27
C1175-112-6250-M	1.175	29.85	0.112	2.85	6.250	158.75	2.571	65.29	2.017	51.24	45.72	203.37	12.43	2.17
C1175-112-6500-M	1.175	29.85	0.112	2.85	6.500	165.10	2.668	67.77	2.091	53.12	45.72	203.37	11.93	2.09
C1175-112-6750-M	1.175	29.85	0.112	2.85	6.750	171.45	2.765	70.24	2.165	55.00	45.72	203.37	11.47	2.01
C1175-112-7000-M*	1.175	29.85	0.112	2.85	7.000	177.80	2.931	74.45	2.324	59.02	45.72	203.37	11.24	1.97
C1175-112-7500-M*	1.175	29.85	0.112	2.85	7.500	190.50	3.126	79.39	2.472	62.78	45.72	203.37	10.45	1.83
C1175-112-8000-M*	1.175	29.85	0.112	2.85	8.000	203.20	3.320	84.34	2.619	66.53	45.72	203.37	9.77	1.71
C1175-112-8500-M*	1.175	29.85	0.112	2.85	8.500	215.90	3.515	89.29	2.767	70.29	45.72	203.37	9.17	1.61
C1175-112-9000-M*	1.175	29.85	0.112	2.85	9.000	228.60	3.710	94.23	2.915	74.05	45.72	203.37	8.64	1.51
C1175-112-9500-M*	1.175	29.85	0.112	2.85	9.500	241.30	3.905	99.18	3.063	77.80	45.72	203.37	8.17	1.43
C1175-125-1750-M	1.175	29.85	0.125	3.18	1.750	44.45	0.911	23.14	0.801	20.35	61.97	275.68	73.87	12.93
C1175-125-1875-M	1.175	29.85	0.125	3.18	1.875	47.63	0.966	24.54	0.846	21.49	61.97	275.68	68.19	11.93
C1175-125-2000-M	1.175	29.85	0.125	3.18	2.000	50.80	1.021	25.94	0.891	22.63	61.97	275.68	63.32	11.08
C1175-125-2125-M	1.175	29.85	0.125	3.18	2.125	53.98	1.076	27.34	0.936	23.77	61.97	275.68	59.10	10.34
C1175-125-2250-M	1.175	29.85	0.125	3.18	2.250	57.15	1.131	28.74	0.981	24.91	61.97	275.68	55.40	9.70
C1175-125-2375-M	1.175	29.85	0.125	3.18	2.375	60.33	1.186	30.14	1.026	26.05	61.97	275.68	52.14	9.13
C1175-125-2500-M	1.175	29.85	0.125	3.18	2.500	63.50	1.242	31.54	1.070	27.19	61.97	275.68	49.25	8.62
C1175-125-2625-M	1.175	29.85	0.125	3.18	2.625	66.68	1.297	32.94	1.115	28.33	61.97	275.68	46.66	8.16
C1175-125-2750-M	1.175	29.85	0.125	3.18	2.750	69.85	1.352	34.33	1.160	29.47	61.97	275.68	44.32	7.76
C1175-125-2875-M	1.175	29.85	0.125	3.18	2.875	73.03	1.407	35.73	1.205	30.61	61.97	275.68	42.21	7.39
C1175-125-3000-M	1.175	29.85	0.125	3.18	3.000	76.20	1.462	37.13	1.250	31.75	61.97	275.68	40.29	7.05
C1175-125-3250-M	1.175	29.85	0.125	3.18	3.250	82.55	1.572	39.93	1.340	34.03	61.97	275.68	36.94	6.46
C1175-125-3500-M	1.175	29.85	0.125	3.18	3.500	88.90	1.682	42.73	1.430	36.31	61.97	275.68	34.09	5.97
C1175-125-3750-M	1.175	29.85	0.125	3.18	3.750	95.25	1.792	45.53	1.519	38.59	61.97	275.68	31.66	5.54
C1175-125-4000-M	1.175	29.85	0.125	3.18	4.000	101.60	1.903	48.33	1.609	40.87	61.97	275.68	29.55	5.17
C1175-125-4250-M	1.175	29.85	0.125	3.18	4.250	107.95	2.013	51.12	1.699	43.15	61.97	275.68	27.70	4.85
C1175-125-4500-M	1.175	29.85	0.125	3.18	4.500	114.30	2.123	53.92	1.789	45.43	61.97	275.68	26.07	4.56
C1175-125-4750-M	1.175	29.85	0.125	3.18	4.750	120.65	2.233	56.72	1.878	47.71	61.97	275.68	24.62	4.31
C1175-125-5000-M	1.175	29.85	0.125	3.18	5.000	127.00	2.343	59.52	1.968	49.99	61.97	275.68	23.33	4.08
C1175-125-5250-M	1.175	29.85	0.125	3.18	5.250	133.35	2.453	62.32	2.058	52.27	61.97	275.68	22.16	3.88
C1175-125-5500-M	1.175	29.85	0.125	3.18	5.500	139.70	2.564	65.12	2.148	54.55	61.97	275.68	21.11	3.69
C1175-125-5750-M	1.175	29.85	0.125	3.18	5.750	146.05	2.674	67.92	2.238	56.83	61.97	275.68	20.15	3.53
C1175-125-6000-M	1.175	29.85	0.125	3.18	6.000	152.40	2.784	70.71	2.327	59.11	61.97	275.68	19.27	3.37
C1175-125-6250-M	1.175	29.85	0.125	3.18	6.250	158.75	2.894	73.51	2.417	61.39	61.97	275.68	18.47	3.23
C1175-125-6500-M	1.175	29.85	0.125	3.18	6.500	165.10	3.004	76.31	2.507	63.67	61.97	275.68	17.73	3.10
C1175-125-6750-M	1.175	29.85	0.125	3.18	6.750	171.45	3.115	79.11	2.597	65.95	61.97	275.68	17.05	2.98
C1175-125-7000-M	1.175	29.85	0.125	3.18	7.000	177.80	3.225	81.91	2.686	68.23	61.97	275.68	16.42	2.87
C1175-125-7500-M	1.175	29.85	0.125	3.18	7.500	190.50	3.445	87.50	2.866	72.80	61.97	275.68	15.28	2.67
C1175-125-8000-M*	1.175	29.85	0.125	3.18	8.000	203.20	3.735	94.88	3.132	79.55	61.97	275.68	14.53	2.54
C1175-125-8500-M*	1.175	29.85	0.125	3.18	8.500	215.90	3.956	100.47	3.311	84.11	61.97	275.68	13.64	2.39
C1175-125-9000-M*	1.175	29.85	0.125	3.18	9.000	228.60	4.176	106.07	3.491	88.67	61.97	275.68	12.85	2.25
C1175-125-9500-M*	1.175	29.85	0.125	3.18	9.500	241.30	4.396	111.67	3.671	93.23	61.97	275.68	12.14	2.13
C1175-135-1750-M	1.175	29.85	0.135	3.43	1.750	44.45	0.981	24.91	0.887	22.54	76.65	340.96	99.65	17.44

STAINLESS STEEL						
Catalog #	Load Length (L_1)		Load (P) at L_1		Spring Rate (R)	
	in	mm	lb	N	lb/in	N/mm
C1175-112-1875-S	0.981	24.92	35.25	156.78	39.44	6.90
C1175-112-2000-S	1.039	26.38	35.25	156.78	36.66	6.42
C1175-112-2125-S	1.096	27.84	35.25	156.78	34.25	5.99
C1175-112-2250-S	1.153	29.29	35.25	156.78	32.14	5.62
C1175-112-2375-S	1.211	30.75	35.25	156.78	30.27	5.30
C1175-112-2500-S	1.268	32.21	35.25	156.78	28.61	5.01
C1175-112-2625-S	1.325	33.66	35.25	156.78	27.12	4.75
C1175-112-2750-S	1.383	35.12	35.25	156.78	25.78	4.51
C1175-112-2875-S	1.440	36.58	35.25	156.78	24.56	4.30
C1175-112-3000-S	1.497	38.03	35.25	156.78	23.46	4.10
C1175-112-3250-S	1.612	40.94	35.25	156.78	21.52	3.77
C1175-112-3500-S	1.727	43.86	35.25	156.78	19.88	3.48
C1175-112-3750-S	1.841	46.77	35.25	156.78	18.47	3.23
C1175-112-4000-S	1.956	49.68	35.25	156.78	17.24	3.02
C1175-112-4250-S	2.071	52.60	35.25	156.78	16.17	2.83
C1175-112-4500-S	2.185	55.51	35.25	156.78	15.23	2.66
C1175-112-4750-S	2.300	58.42	35.25	156.78	14.39	2.52
C1175-112-5000-S	2.415	61.33	35.25	156.78	13.63	2.39
C1175-112-5250-S	2.529	64.25	35.25	156.78	12.96	2.27
C1175-112-5500-S	2.644	67.16	35.25	156.78	12.34	2.16
C1175-112-5750-S	2.759	70.07	35.25	156.78	11.78	2.06
C1175-112-6000-S	2.873	72.98	35.25	156.78	11.27	1.97
C1175-112-6250-S	2.988	75.90	35.25	156.78	10.81	1.89
C1175-112-6500-S	3.103	78.81	35.25	156.78	10.38	1.82
C1175-112-6750-S	3.217	81.72	35.25	156.78	9.98	1.75
C1175-112-7000-S*	3.393	86.17	35.25	156.78	9.77	1.71
C1175-112-7500-S*	3.622	92.00	35.25	156.78	9.09	1.59
C1175-112-8000-S*	3.851	97.83	35.25	156.78	8.50	1.49
C1175-112-8500-S*	4.081	103.65	35.25	156.78	7.98	1.40
C1175-112-9000-S*	4.310	109.48	35.25	156.78	7.52	1.32
C1175-112-9500-S*	4.539	115.30	35.25	156.78	7.11	1.24
C1175-125-1750-S	1.013	25.74	47.33	210.52	64.24	11.24
C1175-125-1875-S	1.077	27.35	47.33	210.52	59.30	10.38
C1175-125-2000-S	1.140	28.97	47.33	210.52	55.06	9.64
C1175-125-2125-S	1.204	30.58	47.33	210.52	51.39	8.99
C1175-125-2250-S	1.268	32.20	47.33	210.52	48.18	8.43
C1175-125-2375-S	1.331	33.81	47.33	210.52	45.34	7.94
C1175-125-2500-S	1.395	35.43	47.33	210.52	42.82	7.49
C1175-125-2625-S	1.458	37.05	47.33	210.52	40.57	7.10
C1175-125-2750-S	1.522	38.66	47.33	210.52	38.54	6.74
C1175-125-2875-S	1.586	40.28	47.33	210.52	36.71	6.42
C1175-125-3000-S	1.649	41.89	47.33	210.52	35.04	6.13
C1175-125-3250-S	1.776	45.12	47.33	210.52	32.12	5.62
C1175-125-3500-S	1.904	48.35	47.33	210.52	29.65	5.19
C1175-125-3750-S	2.031	51.58	47.33	210.52	27.53	4.82
C1175-125-4000-S	2.158	54.82	47.33	210.52	25.69	4.50
C1175-125-4250-S	2.285	58.05	47.33	210.52	24.09	4.22
C1175-125-4500-S	2.413	61.28	47.33	210.52	22.67	3.97
C1175-125-4750-S	2.540	64.51	47.33	210.52	21.41	3.75
C1175-125-5000-S	2.667	67.74	47.33	210.52	20.29	3.55
C1175-125-5250-S	2.794	70.97	47.33	210.52	19.27	3.37
C1175-125-5500-S	2.921	74.20	47.33	210.52	18.35	3.21
C1175-125-5750-S	3.049	77.43	47.33	210.52	17.52	3.07
C1175-125-6000-S	3.176	80.66	47.33	210.52	16.76	2.93
C1175-125-6250-S	3.303	83.90	47.33	210.52	16.06	2.81
C1175-125-6500-S	3.430	87.13	47.33	210.52	15.42	2.70
C1175-125-6750-S	3.557	90.36	47.33	210.52	14.82	2.59
C1175-125-7000-S	3.685	93.59	47.33	210.52	14.28	2.50
C1175-125-7500-S	3.939	100.05	47.33	210.52	13.29	2.33
C1175-125-8000-S*	4.255	108.07	47.33	210.52	12.64	2.21
C1175-125-8500-S*	4.509	114.53	47.33	210.52	11.86	2.08
C1175-125-9000-S*	4.764	121.00	47.33	210.52	11.17	1.95
C1175-125-9500-S*	5.018	127.46	47.33	210.52	10.56	1.85
C1175-135-1750-S	1.080	27.42	58.10	258.43	86.65	15.16

FOR INFORMATION ON ALTERNATIVE FINISHES, SEE PAGE 311

Part Numbers with an "*" are squared and not ground. **Part Numbers in bold** represent the newly expanded Associated Spring RAYMOND compression spring offering.

MUSIC WIRE																STAINLESS STEEL						
Catalog #	Outside Diameter (OD)		Wire Diameter (d)		Free Length (L) Approx		Load Length (L_1)		Solid Height (Sh) Approx		Load (P) at L_1		Spring Rate (R)		Catalog #	Load Length (L_1)		Load (P) at L_1		Spring Rate (R)	
	in	mm	in	mm	in	mm	in	mm	in	mm	lb	N	lb/in	N/mm		in	mm	lb	N	lb/in	N/mm
C1175-135-1875-M	1.175	29.85	0.135	3.43	1.875	47.63	1.041	26.44	0.938	23.83	76.65	340.96	91.89	16.08	**C1175-135-1875-S**	1.148	29.16	58.10	258.43	79.90	13.98
C1175-135-2000-M	1.175	29.85	0.135	3.43	2.000	50.80	1.101	27.96	0.989	25.13	76.65	340.96	85.25	14.92	**C1175-135-2000-S**	1.216	30.89	58.10	258.43	74.13	12.97
C1175-135-2125-M	1.175	29.85	0.135	3.43	2.125	53.98	1.161	29.49	1.040	26.42	76.65	340.96	79.51	13.91	**C1175-135-2125-S**	1.285	32.63	58.10	258.43	69.13	12.10
C1175-135-2250-M	1.175	29.85	0.135	3.43	2.250	57.15	1.221	31.01	1.091	27.72	76.65	340.96	74.49	13.03	**C1175-135-2250-S**	1.353	34.37	58.10	258.43	64.77	11.33
C1175-135-2375-M	1.175	29.85	0.135	3.43	2.375	60.33	1.281	32.54	1.142	29.01	76.65	340.96	70.06	12.26	**C1175-135-2375-S**	1.421	36.10	58.10	258.43	60.92	10.66
C1175-135-2500-M	1.175	29.85	0.135	3.43	2.500	63.50	1.341	34.06	1.193	30.31	76.65	340.96	66.14	11.57	**C1175-135-2500-S**	1.490	37.84	58.10	258.43	57.51	10.06
C1175-135-2625-M	1.175	29.85	0.135	3.43	2.625	66.68	1.401	35.59	1.244	31.60	76.65	340.96	62.63	10.96	**C1175-135-2625-S**	1.558	39.58	58.10	258.43	54.46	9.53
C1175-135-2750-M	1.175	29.85	0.135	3.43	2.750	69.85	1.461	37.11	1.295	32.90	76.65	340.96	59.47	10.41	**C1175-135-2750-S**	1.627	41.31	58.10	258.43	51.71	9.05
C1175-135-2875-M	1.175	29.85	0.135	3.43	2.875	73.03	1.521	38.64	1.346	34.20	76.65	340.96	56.62	9.91	**C1175-135-2875-S**	1.695	43.05	58.10	258.43	49.23	8.62
C1175-135-3000-M	1.175	29.85	0.135	3.43	3.000	76.20	1.581	40.16	1.397	35.49	76.65	340.96	54.02	9.45	**C1175-135-3000-S**	1.763	44.79	58.10	258.43	46.98	8.22
C1175-135-3250-M	1.175	29.85	0.135	3.43	3.250	82.55	1.701	43.21	1.499	38.08	76.65	340.96	49.49	8.66	**C1175-135-3250-S**	1.900	48.26	58.10	258.43	43.04	7.53
C1175-135-3500-M	1.175	29.85	0.135	3.43	3.500	88.90	1.821	46.26	1.601	40.67	76.65	340.96	45.66	7.99	**C1175-135-3500-S**	2.037	51.73	58.10	258.43	39.70	6.95
C1175-135-3750-M	1.175	29.85	0.135	3.43	3.750	95.25	1.941	49.31	1.703	43.26	76.65	340.96	42.38	7.42	**C1175-135-3750-S**	2.173	55.21	58.10	258.43	36.85	6.45
C1175-135-4000-M	1.175	29.85	0.135	3.43	4.000	101.60	2.061	52.36	1.805	45.85	76.65	340.96	39.54	6.92	**C1175-135-4000-S**	2.310	58.68	58.10	258.43	34.38	6.02
C1175-135-4250-M	1.175	29.85	0.135	3.43	4.250	107.95	2.181	55.41	1.907	48.44	76.65	340.96	37.06	6.48	**C1175-135-4250-S**	2.447	62.15	58.10	258.43	32.22	5.64
C1175-135-4500-M	1.175	29.85	0.135	3.43	4.500	114.30	2.302	58.46	2.009	51.03	76.65	340.96	34.87	6.10	**C1175-135-4500-S**	2.584	65.63	58.10	258.43	30.32	5.31
C1175-135-4750-M	1.175	29.85	0.135	3.43	4.750	120.65	2.422	61.51	2.111	53.62	76.65	340.96	32.92	5.76	**C1175-135-4750-S**	2.720	69.10	58.10	258.43	28.63	5.01
C1175-135-5000-M	1.175	29.85	0.135	3.43	5.000	127.00	2.542	64.56	2.213	56.22	76.65	340.96	31.18	5.46	**C1175-135-5000-S**	2.857	72.57	58.10	258.43	27.11	4.74
C1175-135-5250-M	1.175	29.85	0.135	3.43	5.250	133.35	2.662	67.61	2.315	58.81	76.65	340.96	29.62	5.18	**C1175-135-5250-S**	2.994	76.05	58.10	258.43	25.75	4.51
C1175-135-5500-M	1.175	29.85	0.135	3.43	5.500	139.70	2.782	70.66	2.417	61.40	76.65	340.96	28.20	4.93	**C1175-135-5500-S**	3.131	79.52	58.10	258.43	24.52	4.29
C1175-135-5750-M	1.175	29.85	0.135	3.43	5.750	146.05	2.902	73.71	2.519	63.99	76.65	340.96	26.91	4.71	**C1175-135-5750-S**	3.267	82.99	58.10	258.43	23.40	4.10
C1175-135-6000-M	1.175	29.85	0.135	3.43	6.000	152.40	3.022	76.76	2.621	66.58	76.65	340.96	25.74	4.50	**C1175-135-6000-S**	3.404	86.47	58.10	258.43	22.38	3.92
C1175-135-6250-M	1.175	29.85	0.135	3.43	6.250	158.75	3.142	79.81	2.723	69.17	76.65	340.96	24.66	4.32	**C1175-135-6250-S**	3.541	89.94	58.10	258.43	21.45	3.75
C1175-135-6500-M	1.175	29.85	0.135	3.43	6.500	165.10	3.262	82.86	2.825	71.76	76.65	340.96	23.67	4.14	**C1175-135-6500-S**	3.678	93.41	58.10	258.43	20.59	3.60
C1175-135-6750-M	1.175	29.85	0.135	3.43	6.750	171.45	3.382	85.91	2.927	74.35	76.65	340.96	22.76	3.98	**C1175-135-6750-S**	3.814	96.89	58.10	258.43	19.79	3.46
C1175-135-7000-M	1.175	29.85	0.135	3.43	7.000	177.80	3.502	88.96	3.029	76.94	76.65	340.96	21.91	3.83	**C1175-135-7000-S**	3.951	100.36	58.10	258.43	19.06	3.33
C1175-135-7500-M	1.175	29.85	0.135	3.43	7.500	190.50	3.742	95.05	3.233	82.12	76.65	340.96	20.40	3.57	**C1175-135-7500-S**	4.225	107.31	58.10	258.43	17.74	3.10
C1175-135-8000-M	1.175	29.85	0.135	3.43	8.000	203.20	3.982	101.15	3.437	87.30	76.65	340.96	19.08	3.34	**C1175-135-8000-S**	4.498	114.25	58.10	258.43	16.59	2.90
C1175-135-8500-M	1.175	29.85	0.135	3.43	8.500	215.90	4.223	107.25	3.641	92.48	76.65	340.96	17.92	3.14	**C1175-135-8500-S**	4.772	121.20	58.10	258.43	15.58	2.73
C1175-135-9000-M	1.175	29.85	0.135	3.43	9.000	228.60	4.463	113.35	3.845	97.67	76.65	340.96	16.89	2.96	**C1175-135-9000-S**	5.045	128.15	58.10	258.43	14.69	2.57
C1175-135-9500-M	1.175	29.85	0.135	3.43	9.500	241.30	4.703	119.45	4.049	102.85	76.65	340.96	15.98	2.80	**C1175-135-9500-S**	5.319	135.09	58.10	258.43	13.89	2.43
C1175-148-1625-M	1.175	29.85	0.148	3.76	1.625	41.28	1.001	25.43	0.936	23.77	98.73	439.17	158.30	27.70	**C1175-148-1625-S**	1.087	27.60	74.09	329.59	137.66	24.09
C1175-148-1750-M	1.175	29.85	0.148	3.76	1.750	44.45	1.068	27.12	0.995	25.26	98.73	439.17	144.69	25.32	**C1175-148-1750-S**	1.161	29.49	74.09	329.59	125.82	22.02
C1175-148-1875-M	1.175	29.85	0.148	3.76	1.875	47.63	1.134	28.80	1.053	26.76	98.73	439.17	133.24	23.32	**C1175-148-1875-S**	1.235	31.38	74.09	329.59	115.86	20.28
C1175-148-2000-M	1.175	29.85	0.148	3.76	2.000	50.80	1.200	30.49	1.112	28.25	98.73	439.17	123.47	21.61	**C1175-148-2000-S**	1.310	33.27	74.09	329.59	107.36	18.79
C1175-148-2125-M	1.175	29.85	0.148	3.76	2.125	53.98	1.267	32.17	1.171	29.74	98.73	439.17	115.03	20.13	**C1175-148-2125-S**	1.384	35.16	74.09	329.59	100.02	17.50
C1175-148-2250-M	1.175	29.85	0.148	3.76	2.250	57.15	1.333	33.86	1.230	31.24	98.73	439.17	107.67	18.84	**C1175-148-2250-S**	1.459	37.05	74.09	329.59	93.63	16.38
C1175-148-2375-M	1.175	29.85	0.148	3.76	2.375	60.33	1.399	35.54	1.289	32.73	98.73	439.17	101.20	17.71	**C1175-148-2375-S**	1.533	38.94	74.09	329.59	88.00	15.40
C1175-148-2500-M	1.175	29.85	0.148	3.76	2.500	63.50	1.466	37.23	1.347	34.22	98.73	439.17	95.46	16.70	**C1175-148-2500-S**	1.607	40.83	74.09	329.59	83.01	14.53
C1175-148-2625-M	1.175	29.85	0.148	3.76	2.625	66.68	1.532	38.91	1.406	35.72	98.73	439.17	90.33	15.81	**C1175-148-2625-S**	1.682	42.72	74.09	329.59	78.55	13.75
C1175-148-2750-M	1.175	29.85	0.148	3.76	2.750	69.85	1.598	40.60	1.465	37.21	98.73	439.17	85.73	15.00	**C1175-148-2750-S**	1.756	44.60	74.09	329.59	74.55	13.05
C1175-148-2875-M	1.175	29.85	0.148	3.76	2.875	73.03	1.665	42.28	1.524	38.70	98.73	439.17	81.58	14.28	**C1175-148-2875-S**	1.830	46.49	74.09	329.59	70.94	12.41
C1175-148-3000-M	1.175	29.85	0.148	3.76	3.000	76.20	1.731	43.97	1.583	40.20	98.73	439.17	77.81	13.62	**C1175-148-3000-S**	1.905	48.38	74.09	329.59	67.66	11.84
C1175-148-3250-M	1.175	29.85	0.148	3.76	3.250	82.55	1.864	47.34	1.700	43.18	98.73	439.17	71.22	12.46	**C1175-148-3250-S**	2.054	52.16	74.09	329.59	61.93	10.84
C1175-148-3500-M	1.175	29.85	0.148	3.76	3.500	88.90	1.996	50.71	1.818	46.17	98.73	439.17	65.66	11.49	**C1175-148-3500-S**	2.202	55.94	74.09	329.59	57.10	9.99
C1175-148-3750-M	1.175	29.85	0.148	3.76	3.750	95.25	2.129	54.08	1.935	49.15	98.73	439.17	60.91	10.66	**C1175-148-3750-S**	2.351	59.72	74.09	329.59	52.97	9.27
C1175-148-4000-M	1.175	29.85	0.148	3.76	4.000	101.60	2.262	57.45	2.053	52.14	98.73	439.17	56.80	9.94	**C1175-148-4000-S**	2.500	63.50	74.09	329.59	49.39	8.64
C1175-148-4250-M	1.175	29.85	0.148	3.76	4.250	107.95	2.394	60.82	2.170	55.13	98.73	439.17	53.21	9.31	**C1175-148-4250-S**	2.649	67.27	74.09	329.59	46.27	8.10
C1175-148-4500-M	1.175	29.85	0.148	3.76	4.500	114.30	2.527	64.19	2.288	58.11	98.73	439.17	50.04	8.76	**C1175-148-4500-S**	2.797	71.05	74.09	329.59	43.52	7.62
C1175-148-4750-M	1.175	29.85	0.148	3.76	4.750	120.65	2.660	67.56	2.406	61.10	98.73	439.17	47.24	8.27	**C1175-148-4750-S**	2.946	74.83	74.09	329.59	41.07	7.19
C1175-148-5000-M	1.175	29.85	0.148	3.76	5.000	127.00	2.793	70.93	2.523	64.09	98.73	439.17	44.73	7.83	**C1175-148-5000-S**	3.095	78.61	74.09	329.59	38.89	6.81
C1175-148-5250-M	1.175	29.85	0.148	3.76	5.250	133.35	2.925	74.30	2.641	67.07	98.73	439.17	42.47	7.43	**C1175-148-5250-S**	3.244	82.39	74.09	329.59	36.93	6.46
C1175-148-5500-M	1.175	29.85	0.148	3.76	5.500	139.70	3.058	77.67	2.758	70.06	98.73	439.17	40.43	7.07	**C1175-148-5500-S**	3.392	86.16	74.09	329.59	35.15	6.15
C1175-148-5750-M	1.175	29.85	0.148	3.76	5.750	146.05	3.191	81.04	2.876	73.05	98.73	439.17	38.57	6.75	**C1175-148-5750-S**	3.541	89.94	74.09	329.59	33.54	5.87
C1175-148-6000-M	1.175	29.85	0.148	3.76	6.000	152.40	3.323	84.41	2.993	76.03	98.73	439.17	36.88	6.45	**C1175-148-6000-S**	3.690	93.72	74.09	329.59	32.07	5.61
C1175-148-6250-M	1.175	29.85	0.148	3.76	6.250	158.75	3.456	87.78	3.111	79.02	98.73	439.17	35.34	6.18	**C1175-148-6250-S**	3.839	97.50	74.09	329.59	30.73	5.38
C1175-148-6500-M	1.175	29.85	0.148	3.76	6.500	165.10	3.589	91.15	3.229	82.01	98.73	439.17	33.91	5.93	**C1175-148-6500-S**	3.987	101.28	74.09	329.59	29.49	5.16
C1175-148-6750-M	1.175	29.85	0.148	3.76	6.750	171.45	3.721	94.52	3.346	84.99	98.73	439.17	32.60	5.70	**C1175-148-6750-S**	4.136	105.06	74.09	329.59	28.35	4.96
C1175-148-7000-M	1.175	29.85	0.148	3.76	7.000	177.80	3.854	97.89	3.464	87.98	98.73	439.17	31.38	5.49	**C1175-148-7000-S**	4.285	108.83	74.09	329.59	27.29	4.78
C1175-148-7500-M	1.175	29.85	0.148	3.76	7.500	190.50	4.119	104.63	3.699	93.95	98.73	439.17	29.20	5.11	**C1175-148-7500-S**	4.582	116.39	74.09	329.59	25.40	4.44
C1175-148-8000-M	1.175	29.85	0.148	3.76	8.000	203.20	4.385	111.37	3.934	99.92	98.73	439.17	27.31	4.78	**C1175-148-8000-S**	4.880	123.95	74.09	329.59	23.75	4.16
C1175-148-8500-M	1.175	29.85	0.148	3.76	8.500	215.90	4.650	118.11	4.169	105.90	98.73	439.17	25.64	4.49	**C1175-148-8500-S**	5.177	131.50	74.09	329.59	22.30	3.90
C1175-148-9000-M	1.175	29.85	0.148	3.76	9.000	228.60	4.915	124.85	4.404	111.87	98.73	439.17	24.17	4.23	**C1175-148-9000-S**	5.475	139.06	74.09	329.59	21.02	3.68
C1175-148-9500-M	1.175	29.85	0.148	3.76	9.500	241.30	5.181	131.59	4.639	117.84	98.73	439.17	22.86	4.00	**C1175-148-9500-S**	5.772	146.61	74.09	329.59	19.88	3.48

Part Numbers with an "*" are squared and not ground. **Part Numbers in bold** represent the newly expanded Associated Spring RAYMOND compression spring offering.

MUSIC WIRE															STAINLESS STEEL					
Catalog #	Outside Diameter (OD)		Wire Diameter (d)		Free Length (L) Approx		Load Length (L_1)		Solid Height (Sh) Approx		Load (P) at L_1		Spring Rate (R)		Catalog #	Load Length (L_1)		Load (P) at L_1		Spring Rate (R)	
	in	mm	in	mm	in	mm	in	mm	in	mm	lb	N	lb/in	N/mm		in	mm	lb	N	lb/in	N/mm
C1175-162-1625-M	1.175	29.85	0.162	4.12	1.625	41.28	1.082	27.48	1.036	26.30	126.50	562.68	232.99	40.77	**C1175-162-1625-S**	1.161	29.50	93.92	417.77	202.60	35.45
C1175-162-1750-M	1.175	29.85	0.162	4.12	1.750	44.45	1.155	29.33	1.102	28.00	126.50	562.68	212.56	37.20	**C1175-162-1750-S**	1.242	31.54	93.92	417.77	184.84	32.35
C1175-162-1875-M	1.175	29.85	0.162	4.12	1.875	47.63	1.228	31.18	1.169	29.70	126.50	562.68	195.43	34.20	**C1175-162-1875-S**	1.322	33.59	93.92	417.77	169.94	29.74
C1175-162-2000-M	1.175	29.85	0.162	4.12	2.000	50.80	1.301	33.03	1.236	31.39	126.50	562.68	180.86	31.65	**C1175-162-2000-S**	1.403	35.63	93.92	417.77	157.27	27.52
C1175-162-2125-M	1.175	29.85	0.162	4.12	2.125	53.98	1.373	34.88	1.303	33.09	126.50	562.68	168.30	29.45	**C1175-162-2125-S**	1.483	37.67	93.92	417.77	146.35	25.61
C1175-162-2250-M	1.175	29.85	0.162	4.12	2.250	57.15	1.446	36.73	1.370	34.79	126.50	562.68	157.38	27.54	**C1175-162-2250-S**	1.564	39.72	93.92	417.77	136.85	23.95
C1175-162-2375-M	1.175	29.85	0.162	4.12	2.375	60.33	1.519	38.58	1.436	36.49	126.50	562.68	147.79	25.86	**C1175-162-2375-S**	1.644	41.76	93.92	417.77	128.51	22.49
C1175-162-2500-M	1.175	29.85	0.162	4.12	2.500	63.50	1.592	40.43	1.503	38.18	126.50	562.68	139.30	24.38	**C1175-162-2500-S**	1.725	43.81	93.92	417.77	121.13	21.20
C1175-162-2625-M	1.175	29.85	0.162	4.12	2.625	66.68	1.665	42.28	1.570	39.88	126.50	562.68	131.73	23.05	**C1175-162-2625-S**	1.805	45.85	93.92	417.77	114.55	20.05
C1175-162-2750-M	1.175	29.85	0.162	4.12	2.750	69.85	1.738	44.13	1.637	41.58	126.50	562.68	124.94	21.87	**C1175-162-2750-S**	1.886	47.89	93.92	417.77	108.65	19.01
C1175-162-2875-M	1.175	29.85	0.162	4.12	2.875	73.03	1.810	45.98	1.704	43.27	126.50	562.68	118.82	20.79	**C1175-162-2875-S**	1.966	49.94	93.92	417.77	103.32	18.08
C1175-162-3000-M	1.175	29.85	0.162	4.12	3.000	76.20	1.883	47.83	1.770	44.97	126.50	562.68	113.27	19.82	**C1175-162-3000-S**	2.046	51.98	93.92	417.77	98.50	17.24
C1175-162-3250-M	1.175	29.85	0.162	4.12	3.250	82.55	2.029	51.53	1.904	48.36	126.50	562.68	103.59	18.13	**C1175-162-3250-S**	2.207	56.07	93.92	417.77	90.08	15.76
C1175-162-3500-M	1.175	29.85	0.162	4.12	3.500	88.90	2.175	55.23	2.038	51.76	126.50	562.68	95.44	16.70	**C1175-162-3500-S**	2.368	60.16	93.92	417.77	82.99	14.52
C1175-162-3750-M	1.175	29.85	0.162	4.12	3.750	95.25	2.320	58.93	2.171	55.15	126.50	562.68	88.48	15.48	**C1175-162-3750-S**	2.529	64.24	93.92	417.77	76.94	13.46
C1175-162-4000-M	1.175	29.85	0.162	4.12	4.000	101.60	2.466	62.63	2.305	58.55	126.50	562.68	82.46	14.43	**C1175-162-4000-S**	2.690	68.33	93.92	417.77	71.70	12.55
C1175-162-4250-M	1.175	29.85	0.162	4.12	4.250	107.95	2.612	66.33	2.439	61.94	126.50	562.68	77.21	13.51	**C1175-162-4250-S**	2.851	72.42	93.92	417.77	67.14	11.75
C1175-162-4500-M	1.175	29.85	0.162	4.12	4.500	114.30	2.757	70.03	2.572	65.33	126.50	562.68	72.59	12.70	**C1175-162-4500-S**	3.012	76.50	93.92	417.77	63.12	11.05
C1175-162-4750-M	1.175	29.85	0.162	4.12	4.750	120.65	2.903	73.73	2.706	68.73	126.50	562.68	68.49	11.98	**C1175-162-4750-S**	3.173	80.59	93.92	417.77	59.55	10.42
C1175-162-5000-M	1.175	29.85	0.162	4.12	5.000	127.00	3.049	77.43	2.839	72.12	126.50	562.68	64.82	11.34	**C1175-162-5000-S**	3.334	84.68	93.92	417.77	56.37	9.86
C1175-162-5250-M	1.175	29.85	0.162	4.12	5.250	133.35	3.194	81.13	2.973	75.52	126.50	562.68	61.53	10.77	**C1175-162-5250-S**	3.495	88.77	93.92	417.77	53.51	9.36
C1175-162-5500-M	1.175	29.85	0.162	4.12	5.500	139.70	3.340	84.83	3.107	78.91	126.50	562.68	58.56	10.25	**C1175-162-5500-S**	3.656	92.85	93.92	417.77	50.92	8.91
C1175-162-5750-M	1.175	29.85	0.162	4.12	5.750	146.05	3.486	88.53	3.240	82.30	126.50	562.68	55.86	9.78	**C1175-162-5750-S**	3.817	96.94	93.92	417.77	48.58	8.50
C1175-162-6000-M	1.175	29.85	0.162	4.12	6.000	152.40	3.631	92.23	3.374	85.70	126.50	562.68	53.40	9.35	**C1175-162-6000-S**	3.978	101.03	93.92	417.77	46.44	8.13
C1175-162-6250-M	1.175	29.85	0.162	4.12	6.250	158.75	3.777	95.93	3.508	89.09	126.50	562.68	51.15	8.95	**C1175-162-6250-S**	4.138	105.12	93.92	417.77	44.48	7.78
C1175-162-6500-M	1.175	29.85	0.162	4.12	6.500	165.10	3.923	99.63	3.641	92.49	126.50	562.68	49.08	8.59	**C1175-162-6500-S**	4.299	109.20	93.92	417.77	42.68	7.47
C1175-162-6750-M	1.175	29.85	0.162	4.12	6.750	171.45	4.068	103.33	3.775	95.88	126.50	562.68	47.17	8.25	**C1175-162-6750-S**	4.460	113.29	93.92	417.77	41.02	7.18
C1175-162-7000-M	1.175	29.85	0.162	4.12	7.000	177.80	4.214	107.03	3.908	99.27	126.50	562.68	45.40	7.95	**C1175-162-7000-S**	4.621	117.38	93.92	417.77	39.48	6.91
C1175-162-7500-M	1.175	29.85	0.162	4.12	7.500	190.50	4.505	114.43	4.176	106.06	126.50	562.68	42.24	7.39	**C1175-162-7500-S**	4.943	125.55	93.92	417.77	36.73	6.43
C1175-162-8000-M	1.175	29.85	0.162	4.12	8.000	203.20	4.797	121.83	4.443	112.85	126.50	562.68	39.49	6.91	**C1175-162-8000-S**	5.265	133.73	93.92	417.77	34.34	6.01
C1175-162-8500-M	1.175	29.85	0.162	4.12	8.500	215.90	5.088	129.23	4.710	119.64	126.50	562.68	37.07	6.49	**C1175-162-8500-S**	5.587	141.90	93.92	417.77	32.24	5.64
C1175-162-9000-M	1.175	29.85	0.162	4.12	9.000	228.60	5.379	136.63	4.977	126.43	126.50	562.68	34.94	6.11	**C1175-162-9000-S**	5.909	150.08	93.92	417.77	30.38	5.32
C1175-162-9500-M	1.175	29.85	0.162	4.12	9.500	241.30	5.671	144.03	5.245	133.21	126.50	562.68	33.03	5.78	**C1175-162-9500-S**	6.230	158.25	93.92	417.77	28.73	5.03
C1175-177-1625-M	1.175	29.85	0.177	4.50	1.625	41.28	1.160	29.48	1.132	28.76	161.08	716.50	346.76	60.68	**C1175-177-1625-S**	1.233	31.32	118.22	525.87	301.53	52.77
C1175-177-1750-M	1.175	29.85	0.177	4.50	1.750	44.45	1.240	31.49	1.207	30.66	161.08	716.50	315.71	55.25	**C1175-177-1750-S**	1.319	33.51	118.22	525.87	274.53	48.04
C1175-177-1875-M	1.175	29.85	0.177	4.50	1.875	47.63	1.319	33.51	1.282	32.56	161.08	716.50	289.77	50.71	**C1175-177-1875-S**	1.406	35.71	118.22	525.87	251.97	44.10
C1175-177-2000-M	1.175	29.85	0.177	4.50	2.000	50.80	1.398	35.52	1.357	34.47	161.08	716.50	267.76	46.86	**C1175-177-2000-S**	1.492	37.90	118.22	525.87	232.84	40.75
C1175-177-2125-M	1.175	29.85	0.177	4.50	2.125	53.98	1.478	37.54	1.432	36.37	161.08	716.50	248.86	43.55	**C1175-177-2125-S**	1.579	40.10	118.22	525.87	216.40	37.87
C1175-177-2250-M	1.175	29.85	0.177	4.50	2.250	57.15	1.557	39.55	1.507	38.27	161.08	716.50	232.46	40.68	**C1175-177-2250-S**	1.665	42.29	118.22	525.87	202.14	35.37
C1175-177-2375-M	1.175	29.85	0.177	4.50	2.375	60.33	1.636	41.56	1.581	40.17	161.08	716.50	218.08	38.16	**C1175-177-2375-S**	1.752	44.49	118.22	525.87	189.63	33.19
C1175-177-2500-M	1.175	29.85	0.177	4.50	2.500	63.50	1.716	43.58	1.656	42.07	161.08	716.50	205.38	35.94	**C1175-177-2500-S**	1.838	46.69	118.22	525.87	178.59	31.25
C1175-177-2625-M	1.175	29.85	0.177	4.50	2.625	66.68	1.795	45.59	1.731	43.97	161.08	716.50	194.07	33.96	**C1175-177-2625-S**	1.924	48.88	118.22	525.87	168.76	29.53
C1175-177-2750-M	1.175	29.85	0.177	4.50	2.750	69.85	1.874	47.61	1.806	45.87	161.08	716.50	183.95	32.19	**C1175-177-2750-S**	2.011	51.08	118.22	525.87	159.95	27.99
C1175-177-2875-M	1.175	29.85	0.177	4.50	2.875	73.03	1.954	49.62	1.881	47.77	161.08	716.50	174.83	30.59	**C1175-177-2875-S**	2.097	53.27	118.22	525.87	152.02	26.60
C1175-177-3000-M	1.175	29.85	0.177	4.50	3.000	76.20	2.033	51.64	1.955	49.67	161.08	716.50	166.57	29.15	**C1175-177-3000-S**	2.184	55.47	118.22	525.87	144.84	25.35
C1175-177-3250-M	1.175	29.85	0.177	4.50	3.250	82.55	2.192	55.67	2.105	53.47	161.08	716.50	152.19	26.63	**C1175-177-3250-S**	2.357	59.86	118.22	525.87	132.34	23.16
C1175-177-3500-M	1.175	29.85	0.177	4.50	3.500	88.90	2.350	59.70	2.255	57.27	161.08	716.50	140.09	24.52	**C1175-177-3500-S**	2.530	64.25	118.22	525.87	121.82	21.32
C1175-177-3750-M	1.175	29.85	0.177	4.50	3.750	95.25	2.509	63.73	2.404	61.07	161.08	716.50	129.78	22.71	**C1175-177-3750-S**	2.702	68.64	118.22	525.87	112.85	19.75
C1175-177-4000-M	1.175	29.85	0.177	4.50	4.000	101.60	2.668	67.75	2.554	64.87	161.08	716.50	120.88	21.15	**C1175-177-4000-S**	2.875	73.03	118.22	525.87	105.12	18.40
C1175-177-4250-M	1.175	29.85	0.177	4.50	4.250	107.95	2.826	71.78	2.704	68.67	161.08	716.50	113.13	19.80	**C1175-177-4250-S**	3.048	77.42	118.22	525.87	98.37	17.21
C1175-177-4500-M	1.175	29.85	0.177	4.50	4.500	114.30	2.985	75.81	2.853	72.47	161.08	716.50	106.30	18.60	**C1175-177-4500-S**	3.221	81.82	118.22	525.87	92.44	16.18
C1175-177-4750-M	1.175	29.85	0.177	4.50	4.750	120.65	3.143	79.84	3.003	76.27	161.08	716.50	100.26	17.55	**C1175-177-4750-S**	3.394	86.21	118.22	525.87	87.18	15.26
C1175-177-5000-M	1.175	29.85	0.177	4.50	5.000	127.00	3.302	83.87	3.153	80.07	161.08	716.50	94.86	16.60	**C1175-177-5000-S**	3.567	90.60	118.22	525.87	82.49	14.44
C1175-177-5250-M	1.175	29.85	0.177	4.50	5.250	133.35	3.461	87.90	3.302	83.87	161.08	716.50	90.02	15.75	**C1175-177-5250-S**	3.740	94.99	118.22	525.87	78.28	13.70
C1175-177-5500-M	1.175	29.85	0.177	4.50	5.500	139.70	3.619	91.93	3.452	87.68	161.08	716.50	85.65	14.99	**C1175-177-5500-S**	3.913	99.38	118.22	525.87	74.48	13.03
C1175-177-5750-M	1.175	29.85	0.177	4.50	5.750	146.05	3.778	95.96	3.601	91.48	161.08	716.50	81.68	14.29	**C1175-177-5750-S**	4.085	103.77	118.22	525.87	71.03	12.43
C1175-177-6000-M	1.175	29.85	0.177	4.50	6.000	152.40	3.937	99.99	3.751	95.28	161.08	716.50	78.06	13.66	**C1175-177-6000-S**	4.258	108.16	118.22	525.87	67.88	11.88
C1175-177-6250-M	1.175	29.85	0.177	4.50	6.250	158.75	4.095	104.02	3.901	99.08	161.08	716.50	74.75	13.08	**C1175-177-6250-S**	4.431	112.55	118.22	525.87	65.00	11.38
C1175-177-6500-M	1.175	29.85	0.177	4.50	6.500	165.10	4.254	108.05	4.050	102.88	161.08	716.50	71.71	12.55	**C1175-177-6500-S**	4.604	116.95	118.22	525.87	62.36	10.91
C1175-177-6750-M	1.175	29.85	0.177	4.50	6.750	171.45	4.412	112.08	4.200	106.68	161.08	716.50	68.91	12.06	**C1175-177-6750-S**	4.777	121.34	118.22	525.87	59.92	10.49
C1175-177-7000-M	1.175	29.85	0.177	4.50	7.000	177.80	4.571	116.11	4.350	110.48	161.08	716.50	66.32	11.61	**C1175-177-7000-S**	4.950	125.73	118.22	525.87	57.67	10.09
C1175-177-7500-M	1.175	29.85	0.177	4.50	7.500	190.50	4.888	124.16	4.649	118.08	161.08	716.50	61.68	10.79	**C1175-177-7500-S**	5.296	134.51	118.22	525.87	53.63	9.39
C1175-177-8000-M	1.175	29.85	0.177	4.50	8.000	203.20	5.206	132.22	4.948	125.68	161.08	716.50	57.64	10.09	**C1175-177-8000-S**	5.641	143.29	118.22	525.87	50.12	8.77
C1175-177-8500-M	1.175	29.85	0.177	4.50	8.500	215.90	5.523	140.28	5.247	133.28	161.08	716.50	54.11	9.47	**C1175-177-8500-S**	5.987	152.08	118.22	525.87	47.05	8.23

FOR INFORMATION ON ALTERNATIVE FINISHES, SEE PAGE 311

Part Numbers with an "*" are squared and not ground. **Part Numbers in bold** represent the newly expanded Associated Spring RAYMOND compression spring offering.

MUSIC WIRE																	STAINLESS STEEL						
Catalog #	Outside Diameter (OD)		Wire Diameter (d)		Free Length (L) Approx		Load Length (L_1)		Solid Height (Sh) Approx		Load (P) at L_1		Spring Rate (R)		Catalog #	Load Length (L_1)		Load (P) at L_1		Spring Rate (R)	
	in	mm	in	mm	in	mm	in	mm	in	mm	lb	N	lb/in	N/mm		in	mm	lb	N	lb/in	N/mm
C1175-177-9000-M	1.175	29.85	0.177	4.50	9.000	228.60	5.840	148.34	5.547	140.89	161.08	716.50	50.98	8.92	**C1175-177-9000-S**	6.333	160.86	118.22	525.87	44.33	7.76
C1175-177-9500-M	1.175	29.85	0.177	4.50	9.500	241.30	6.157	156.40	5.846	148.49	161.08	716.50	48.19	8.43	**C1175-177-9500-S**	6.679	169.64	118.22	525.87	41.90	7.33
C1175-192-1625-M	1.175	29.85	0.192	4.88	1.625	41.28	1.230	31.24	1.218	30.95	200.86	893.49	508.61	89.01	**C1175-192-1625-S**	1.295	32.91	145.74	648.27	442.27	77.40
C1175-192-1750-M	1.175	29.85	0.192	4.88	1.750	44.45	1.315	33.41	1.301	33.03	200.86	893.49	462.06	80.86	**C1175-192-1750-S**	1.387	35.24	145.74	648.27	401.80	70.31
C1175-192-1875-M	1.175	29.85	0.192	4.88	1.875	47.63	1.401	35.57	1.383	35.12	200.86	893.49	423.33	74.08	**C1175-192-1875-S**	1.479	37.57	145.74	648.27	368.11	64.42
C1175-192-2000-M	1.175	29.85	0.192	4.88	2.000	50.80	1.486	37.74	1.465	37.20	200.86	893.49	390.58	68.35	**C1175-192-2000-S**	1.571	39.90	145.74	648.27	339.64	59.44
C1175-192-2125-M	1.175	29.85	0.192	4.88	2.125	53.98	1.571	39.90	1.547	39.29	200.86	893.49	362.54	63.44	**C1175-192-2125-S**	1.663	42.23	145.74	648.27	315.25	55.17
C1175-192-2250-M	1.175	29.85	0.192	4.88	2.250	57.15	1.656	42.07	1.629	41.38	200.86	893.49	338.25	59.19	**C1175-192-2250-S**	1.755	44.56	145.74	648.27	294.13	51.47
C1175-192-2375-M	1.175	29.85	0.192	4.88	2.375	60.33	1.741	44.23	1.711	43.46	200.86	893.49	317.02	55.48	**C1175-192-2375-S**	1.846	46.90	145.74	648.27	275.67	48.24
C1175-192-2500-M	1.175	29.85	0.192	4.88	2.500	63.50	1.827	46.40	1.793	45.55	200.86	893.49	298.29	52.20	**C1175-192-2500-S**	1.938	49.23	145.74	648.27	259.38	45.39
C1175-192-2625-M	1.175	29.85	0.192	4.88	2.625	66.68	1.912	48.56	1.875	47.63	200.86	893.49	281.65	49.29	**C1175-192-2625-S**	2.030	51.56	145.74	648.27	244.91	42.86
C1175-192-2750-M	1.175	29.85	0.192	4.88	2.750	69.85	1.997	50.73	1.957	49.72	200.86	893.49	266.77	46.68	**C1175-192-2750-S**	2.122	53.89	145.74	648.27	231.98	40.60
C1175-192-2875-M	1.175	29.85	0.192	4.88	2.875	73.03	2.082	52.89	2.040	51.80	200.86	893.49	253.38	44.34	**C1175-192-2875-S**	2.214	56.22	145.74	648.27	220.33	38.56
C1175-192-3000-M	1.175	29.85	0.192	4.88	3.000	76.20	2.167	55.05	2.122	53.89	200.86	893.49	241.28	42.22	**C1175-192-3000-S**	2.305	58.56	145.74	648.27	209.81	36.72
C1175-192-3250-M	1.175	29.85	0.192	4.88	3.250	82.55	2.338	59.38	2.286	58.06	200.86	893.49	220.23	38.54	**C1175-192-3250-S**	2.489	63.22	145.74	648.27	191.50	33.51
C1175-192-3500-M	1.175	29.85	0.192	4.88	3.500	88.90	2.508	63.71	2.450	62.23	200.86	893.49	202.56	35.45	**C1175-192-3500-S**	2.673	67.88	145.74	648.27	176.14	30.82
C1175-192-3750-M	1.175	29.85	0.192	4.88	3.750	95.25	2.679	68.04	2.614	66.40	200.86	893.49	187.52	32.82	**C1175-192-3750-S**	2.856	72.55	145.74	648.27	163.06	28.54
C1175-192-4000-M	1.175	29.85	0.192	4.88	4.000	101.60	2.849	72.37	2.778	70.57	200.86	893.49	174.55	30.55	**C1175-192-4000-S**	3.040	77.21	145.74	648.27	151.78	26.56
C1175-192-4250-M	1.175	29.85	0.192	4.88	4.250	107.95	3.020	76.70	2.943	74.75	200.86	893.49	163.26	28.57	**C1175-192-4250-S**	3.223	81.88	145.74	648.27	141.97	24.84
C1175-192-4500-M	1.175	29.85	0.192	4.88	4.500	114.30	3.190	81.03	3.107	78.92	200.86	893.49	153.35	26.84	**C1175-192-4500-S**	3.407	86.54	145.74	648.27	133.35	23.34
C1175-192-4750-M	1.175	29.85	0.192	4.88	4.750	120.65	3.361	85.36	3.271	83.09	200.86	893.49	144.57	25.30	**C1175-192-4750-S**	3.591	91.20	145.74	648.27	125.71	22.00
C1175-192-5000-M	1.175	29.85	0.192	4.88	5.000	127.00	3.531	89.69	3.435	87.26	200.86	893.49	136.74	23.93	**C1175-192-5000-S**	3.774	95.87	145.74	648.27	118.90	20.81
C1175-192-5250-M	1.175	29.85	0.192	4.88	5.250	133.35	3.701	94.02	3.600	91.43	200.86	893.49	129.71	22.70	**C1175-192-5250-S**	3.958	100.53	145.74	648.27	112.79	19.74
C1175-192-5500-M	1.175	29.85	0.192	4.88	5.500	139.70	3.872	98.35	3.764	95.60	200.86	893.49	123.37	21.59	**C1175-192-5500-S**	4.142	105.20	145.74	648.27	107.28	18.77
C1175-192-5750-M	1.175	29.85	0.192	4.88	5.750	146.05	4.042	102.68	3.928	99.77	200.86	893.49	117.63	20.58	**C1175-192-5750-S**	4.325	109.86	145.74	648.27	102.28	17.90
C1175-192-6000-M	1.175	29.85	0.192	4.88	6.000	152.40	4.213	107.00	4.092	103.94	200.86	893.49	112.39	19.67	**C1175-192-6000-S**	4.509	114.52	145.74	648.27	97.73	17.10
C1175-192-6250-M	1.175	29.85	0.192	4.88	6.250	158.75	4.383	111.33	4.256	108.11	200.86	893.49	107.60	18.83	**C1175-192-6250-S**	4.692	119.19	145.74	648.27	93.57	16.37
C1175-192-6500-M	1.175	29.85	0.192	4.88	6.500	165.10	4.554	115.66	4.421	112.29	200.86	893.49	103.20	18.06	**C1175-192-6500-S**	4.876	123.85	145.74	648.27	89.74	15.70
C1175-192-6750-M	1.175	29.85	0.192	4.88	6.750	171.45	4.724	119.99	4.585	116.46	200.86	893.49	99.15	17.35	**C1175-192-6750-S**	5.060	128.51	145.74	648.27	86.22	15.09
C1175-192-7000-M	1.175	29.85	0.192	4.88	7.000	177.80	4.895	124.32	4.749	120.63	200.86	893.49	95.40	16.70	**C1175-192-7000-S**	5.243	133.18	145.74	648.27	82.96	14.52
C1175-192-7500-M	1.175	29.85	0.192	4.88	7.500	190.50	5.235	132.98	5.078	128.97	200.86	893.49	88.70	15.52	**C1175-192-7500-S**	5.610	142.51	145.74	648.27	77.13	13.50
C1175-192-8000-M	1.175	29.85	0.192	4.88	8.000	203.20	5.576	141.64	5.406	137.31	200.86	893.49	82.88	14.50	**C1175-192-8000-S**	5.978	151.83	145.74	648.27	72.07	12.61
C1175-192-8500-M	1.175	29.85	0.192	4.88	8.500	215.90	5.917	150.30	5.734	145.66	200.86	893.49	77.77	13.61	**C1175-192-8500-S**	6.345	161.16	145.74	648.27	67.63	11.83
C1175-192-9000-M	1.175	29.85	0.192	4.88	9.000	228.60	6.258	158.96	6.063	154.00	200.86	893.49	73.26	12.82	**C1175-192-9000-S**	6.712	170.49	145.74	648.27	63.70	11.15
C1175-192-9500-M	1.175	29.85	0.192	4.88	9.500	241.30	6.599	167.61	6.391	162.34	200.86	893.49	69.24	12.12	**C1175-192-9500-S**	7.079	179.82	145.74	648.27	60.21	10.54
C1175-207-1750-M	1.175	29.85	0.207	5.26	1.750	44.45	1.437	36.51	1.382	35.11	208.69	928.32	667.50	116.81	**C1175-207-1750-S**	1.446	36.73	176.49	785.05	580.44	101.58
C1175-207-1875-M	1.175	29.85	0.207	5.26	1.875	47.63	1.472	37.39	1.471	37.36	246.04	1094.43	610.39	106.82	**C1175-207-1875-S**	1.542	39.18	176.49	785.05	530.78	92.89
C1175-207-2000-M	1.175	29.85	0.207	5.26	2.000	50.80	1.562	39.69	1.559	39.61	246.04	1094.43	562.29	98.40	**C1175-207-2000-S**	1.639	41.63	176.49	785.05	488.94	85.57
C1175-207-2125-M	1.175	29.85	0.207	5.26	2.125	53.98	1.653	41.98	1.648	41.86	246.04	1094.43	521.21	91.21	**C1175-207-2125-S**	1.736	44.08	176.49	785.05	453.22	79.31
C1175-207-2250-M	1.175	29.85	0.207	5.26	2.250	57.15	1.743	44.28	1.737	44.11	246.04	1094.43	485.72	85.00	**C1175-207-2250-S**	1.832	46.54	176.49	785.05	422.37	73.91
C1175-207-2375-M	1.175	29.85	0.207	5.26	2.375	60.33	1.834	46.58	1.825	46.37	246.04	1094.43	454.76	79.58	**C1175-207-2375-S**	1.929	48.99	176.49	785.05	395.44	69.20
C1175-207-2500-M	1.175	29.85	0.207	5.26	2.500	63.50	1.924	48.88	1.914	48.62	246.04	1094.43	427.51	74.81	**C1175-207-2500-S**	2.025	51.44	176.49	785.05	371.75	65.06
C1175-207-2625-M	1.175	29.85	0.207	5.26	2.625	66.68	2.015	51.18	2.003	50.87	246.04	1094.43	403.34	70.58	**C1175-207-2625-S**	2.122	53.89	176.49	785.05	350.73	61.38
C1175-207-2750-M	1.175	29.85	0.207	5.26	2.750	69.85	2.106	53.48	2.091	53.12	246.04	1094.43	381.76	66.81	**C1175-207-2750-S**	2.218	56.35	176.49	785.05	331.96	58.09
C1175-207-2875-M	1.175	29.85	0.207	5.26	2.875	73.03	2.196	55.78	2.180	55.37	246.04	1094.43	362.37	63.41	**C1175-207-2875-S**	2.315	58.80	176.49	785.05	315.10	55.14
C1175-207-3000-M	1.175	29.85	0.207	5.26	3.000	76.20	2.287	58.08	2.269	57.62	246.04	1094.43	344.85	60.35	**C1175-207-3000-S**	2.411	61.25	176.49	785.05	299.87	52.48
C1175-207-3250-M	1.175	29.85	0.207	5.26	3.250	82.55	2.468	62.68	2.446	62.13	246.04	1094.43	314.45	55.03	**C1175-207-3250-S**	2.605	66.16	176.49	785.05	273.44	47.85
C1175-207-3500-M	1.175	29.85	0.207	5.26	3.500	88.90	2.649	67.27	2.623	66.63	246.04	1094.43	288.98	50.57	**C1175-207-3500-S**	2.798	71.06	176.49	785.05	251.29	43.97
C1175-207-3750-M	1.175	29.85	0.207	5.26	3.750	95.25	2.830	71.87	2.801	71.13	246.04	1094.43	267.32	46.78	**C1175-207-3750-S**	2.991	75.97	176.49	785.05	232.45	40.68
C1175-207-4000-M	1.175	29.85	0.207	5.26	4.000	101.60	3.011	76.47	2.978	75.64	246.04	1094.43	248.69	43.52	**C1175-207-4000-S**	3.184	80.87	176.49	785.05	216.25	37.84
C1175-207-4250-M	1.175	29.85	0.207	5.26	4.250	107.95	3.192	81.07	3.155	80.14	246.04	1094.43	232.48	40.68	**C1175-207-4250-S**	3.377	85.78	176.49	785.05	202.16	35.38
C1175-207-4500-M	1.175	29.85	0.207	5.26	4.500	114.30	3.373	85.67	3.332	84.64	246.04	1094.43	218.25	38.19	**C1175-207-4500-S**	3.570	90.68	176.49	785.05	189.79	33.21
C1175-207-4750-M	1.175	29.85	0.207	5.26	4.750	120.65	3.554	90.26	3.510	89.15	246.04	1094.43	205.67	35.99	**C1175-207-4750-S**	3.763	95.58	176.49	785.05	178.84	31.30
C1175-207-5000-M	1.175	29.85	0.207	5.26	5.000	127.00	3.735	94.86	3.687	93.65	246.04	1094.43	194.46	34.03	**C1175-207-5000-S**	3.956	100.49	176.49	785.05	169.09	29.59
C1175-207-5250-M	1.175	29.85	0.207	5.26	5.250	133.35	3.916	99.46	3.864	98.15	246.04	1094.43	184.41	32.27	**C1175-207-5250-S**	4.149	105.39	176.49	785.05	160.35	28.06
C1175-207-5500-M	1.175	29.85	0.207	5.26	5.500	139.70	4.097	104.06	4.042	102.66	246.04	1094.43	175.34	30.68	**C1175-207-5500-S**	4.342	110.30	176.49	785.05	152.47	26.68
C1175-207-5750-M	1.175	29.85	0.207	5.26	5.750	146.05	4.278	108.66	4.219	107.16	246.04	1094.43	167.13	29.25	**C1175-207-5750-S**	4.536	115.20	176.49	785.05	145.33	25.43
C1175-207-6000-M	1.175	29.85	0.207	5.26	6.000	152.40	4.459	113.25	4.396	111.66	246.04	1094.43	159.65	27.94	**C1175-207-6000-S**	4.729	120.11	176.49	785.05	138.82	24.29
C1175-207-6250-M	1.175	29.85	0.207	5.26	6.250	158.75	4.640	117.85	4.574	116.17	246.04	1094.43	152.81	26.74	**C1175-207-6250-S**	4.922	125.01	176.49	785.05	132.88	23.25
C1175-207-6500-M	1.175	29.85	0.207	5.26	6.500	165.10	4.821	122.45	4.751	120.67	246.04	1094.43	146.53	25.64	**C1175-207-6500-S**	5.115	129.92	176.49	785.05	127.42	22.30
C1175-207-6750-M	1.175	29.85	0.207	5.26	6.750	171.45	5.002	127.05	4.928	125.17	246.04	1094.43	140.75	24.63	**C1175-207-6750-S**	5.308	134.82	176.49	785.05	122.39	21.42
C1175-207-7000-M	1.175	29.85	0.207	5.26	7.000	177.80	5.183	131.65	5.105	129.68	246.04	1094.43	135.41	23.70	**C1175-207-7000-S**	5.501	139.73	176.49	785.05	117.75	20.61
C1175-207-7500-M	1.175	29.85	0.207	5.26	7.500	190.50	5.545	140.84	5.460	138.68	246.04	1094.43	125.85	22.02	**C1175-207-7500-S**	5.887	149.54	176.49	785.05	109.44	19.15
C1175-207-8000-M	1.175	29.85	0.207	5.26	8.000	203.20	5.907	150.04	5.815	147.68	246.04	1094.43	117.56	20.57	**C1175-207-8000-S**	6.274	159.35	176.49	785.05	102.22	17.89

Part Numbers with an "*" are squared and not ground. **Part Numbers in bold** represent the newly expanded Associated Spring RAYMOND compression spring offering.

MUSIC WIRE															STAINLESS STEEL						
Catalog #	Outside Diameter (OD)		Wire Diameter (d)		Free Length (L) Approx		Load Length (L_1)		Solid Height (Sh) Approx		Load (P) at L_1		Spring Rate (R)		Catalog #	Load Length (L_1)		Load (P) at L_1		Spring Rate (R)	
	in	mm	in	mm	in	mm	in	mm	in	mm	lb	N	lb/in	N/mm		in	mm	lb	N	lb/in	N/mm
C1175-207-8500-M	**1.175**	**29.85**	**0.207**	**5.26**	**8.500**	**215.90**	**6.269**	**159.24**	**6.169**	**156.70**	**246.04**	**1094.43**	**110.29**	**19.30**	**C1175-207-8500-S**	**6.660**	**169.16**	**176.49**	**785.05**	**95.90**	**16.78**
C1175-207-9000-M	**1.175**	**29.85**	**0.207**	**5.26**	**9.000**	**228.60**	**6.631**	**168.43**	**6.524**	**165.70**	**246.04**	**1094.43**	**103.87**	**18.18**	**C1175-207-9000-S**	**7.046**	**178.97**	**176.49**	**785.05**	**90.32**	**15.81**
C1175-207-9500-M	**1.175**	**29.85**	**0.207**	**5.26**	**9.500**	**241.30**	**6.993**	**177.63**	**6.878**	**174.71**	**246.04**	**1094.43**	**98.15**	**17.18**	**C1175-207-9500-S**	**7.432**	**188.78**	**176.49**	**785.05**	**85.35**	**14.94**
C1175-225-1750-M	**1.175**	**29.85**	**0.225**	**5.72**	**1.750**	**44.45**	**1.508**	**38.31**	**1.466**	**37.23**	**246.89**	**1098.23**	**1022.02**	**178.85**	**C1175-225-1750-S**	**1.505**	**38.23**	**217.63**	**968.05**	**888.71**	**155.52**
C1175-225-1875-M	**1.175**	**29.85**	**0.225**	**5.72**	**1.875**	**47.63**	**1.608**	**40.85**	**1.561**	**39.66**	**248.61**	**1105.86**	**932.37**	**163.16**	**C1175-225-1875-S**	**1.607**	**40.81**	**217.63**	**968.05**	**810.76**	**141.88**
C1175-225-2000-M	**1.175**	**29.85**	**0.225**	**5.72**	**2.000**	**50.80**	**1.708**	**43.39**	**1.657**	**42.08**	**250.05**	**1112.26**	**857.18**	**150.01**	**C1175-225-2000-S**	**1.708**	**43.38**	**217.63**	**968.05**	**745.37**	**130.44**
C1175-225-2125-M	**1.175**	**29.85**	**0.225**	**5.72**	**2.125**	**53.98**	**1.808**	**45.93**	**1.752**	**44.51**	**251.27**	**1117.70**	**793.21**	**138.81**	**C1175-225-2125-S**	**1.809**	**45.96**	**217.63**	**968.05**	**689.75**	**120.71**
C1175-225-2250-M	**1.175**	**29.85**	**0.225**	**5.72**	**2.250**	**57.15**	**1.908**	**48.47**	**1.848**	**46.93**	**252.32**	**1122.39**	**738.13**	**129.17**	**C1175-225-2250-S**	**1.911**	**48.54**	**217.63**	**968.05**	**641.85**	**112.32**
C1175-225-2375-M	**1.175**	**29.85**	**0.225**	**5.72**	**2.375**	**60.33**	**2.008**	**51.01**	**1.943**	**49.36**	**253.24**	**1126.46**	**690.20**	**120.78**	**C1175-225-2375-S**	**2.012**	**51.11**	**217.63**	**968.05**	**600.17**	**105.03**
C1175-225-2500-M	**1.175**	**29.85**	**0.225**	**5.72**	**2.500**	**63.50**	**2.108**	**53.54**	**2.039**	**51.79**	**254.04**	**1130.04**	**648.11**	**113.42**	**C1175-225-2500-S**	**2.114**	**53.69**	**217.63**	**968.05**	**563.58**	**98.63**
C1175-225-2625-M	**1.175**	**29.85**	**0.225**	**5.72**	**2.625**	**66.68**	**2.208**	**56.08**	**2.134**	**54.21**	**254.76**	**1133.21**	**610.86**	**106.90**	**C1175-225-2625-S**	**2.215**	**56.27**	**217.63**	**968.05**	**531.19**	**92.96**
C1175-225-2750-M	**1.175**	**29.85**	**0.225**	**5.72**	**2.750**	**69.85**	**2.308**	**58.62**	**2.230**	**56.64**	**255.39**	**1136.04**	**577.66**	**101.09**	**C1175-225-2750-S**	**2.317**	**58.85**	**217.63**	**968.05**	**502.32**	**87.91**
C1175-225-2875-M	**1.175**	**29.85**	**0.225**	**5.72**	**2.875**	**73.03**	**2.408**	**61.16**	**2.325**	**59.06**	**255.96**	**1138.57**	**547.89**	**95.88**	**C1175-225-2875-S**	**2.418**	**61.42**	**217.63**	**968.05**	**476.42**	**83.37**
C1175-225-3000-M	**1.175**	**29.85**	**0.225**	**5.72**	**3.000**	**76.20**	**2.508**	**63.70**	**2.421**	**61.49**	**256.47**	**1140.85**	**521.03**	**91.18**	**C1175-225-3000-S**	**2.520**	**64.00**	**217.63**	**968.05**	**453.07**	**79.29**
C1175-225-3250-M	**1.175**	**29.85**	**0.225**	**5.72**	**3.250**	**82.55**	**2.708**	**68.77**	**2.612**	**66.34**	**257.36**	**1144.81**	**474.51**	**83.04**	**C1175-225-3250-S**	**2.723**	**69.15**	**217.63**	**968.05**	**412.62**	**72.21**
C1175-225-3750-M	**1.175**	**29.85**	**0.225**	**5.72**	**3.750**	**95.25**	**3.107**	**78.93**	**2.994**	**76.05**	**258.74**	**1150.93**	**402.62**	**70.46**	**C1175-225-3750-S**	**3.128**	**79.46**	**217.63**	**968.05**	**350.10**	**61.27**
C1175-225-4000-M	**1.175**	**29.85**	**0.225**	**5.72**	**4.000**	**101.60**	**3.307**	**84.00**	**3.185**	**80.90**	**259.28**	**1153.34**	**374.26**	**65.50**	**C1175-225-4000-S**	**3.331**	**84.61**	**217.63**	**968.05**	**325.45**	**56.95**
C1175-225-4250-M	**1.175**	**29.85**	**0.225**	**5.72**	**4.250**	**107.95**	**3.507**	**89.08**	**3.376**	**85.75**	**259.75**	**1155.44**	**349.64**	**61.19**	**C1175-225-4250-S**	**3.534**	**89.77**	**217.63**	**968.05**	**304.03**	**53.21**
C1175-225-4500-M	**1.175**	**29.85**	**0.225**	**5.72**	**4.500**	**114.30**	**3.707**	**94.16**	**3.567**	**90.60**	**260.17**	**1157.27**	**328.06**	**57.41**	**C1175-225-4500-S**	**3.737**	**94.92**	**217.63**	**968.05**	**285.27**	**49.92**
C1175-225-4750-M	**1.175**	**29.85**	**0.225**	**5.72**	**4.750**	**120.65**	**3.907**	**99.23**	**3.758**	**95.45**	**260.53**	**1158.89**	**308.98**	**54.07**	**C1175-225-4750-S**	**3.940**	**100.08**	**217.63**	**968.05**	**268.68**	**47.02**
C1175-225-5000-M	**1.175**	**29.85**	**0.225**	**5.72**	**5.000**	**127.00**	**4.107**	**104.31**	**3.949**	**100.31**	**260.85**	**1160.34**	**292.01**	**51.10**	**C1175-225-5000-S**	**4.143**	**105.23**	**217.63**	**968.05**	**253.92**	**44.44**
C1175-225-5250-M	**1.175**	**29.85**	**0.225**	**5.72**	**5.250**	**133.35**	**4.307**	**109.39**	**4.140**	**105.16**	**261.15**	**1161.63**	**276.80**	**48.44**	**C1175-225-5250-S**	**4.346**	**110.38**	**217.63**	**968.05**	**240.69**	**42.12**
C1175-225-5500-M	**1.175**	**29.85**	**0.225**	**5.72**	**5.500**	**139.70**	**4.331**	**110.01**	**4.331**	**110.01**	**307.53**	**1367.96**	**263.10**	**46.04**	**C1175-225-5500-S**	**4.549**	**115.54**	**217.63**	**968.05**	**228.78**	**40.04**
C1175-225-5750-M	**1.175**	**29.85**	**0.225**	**5.72**	**5.750**	**146.05**	**4.523**	**114.89**	**4.522**	**114.86**	**307.53**	**1367.96**	**250.69**	**43.87**	**C1175-225-5750-S**	**4.752**	**120.69**	**217.63**	**968.05**	**217.99**	**38.15**
C1175-225-6000-M	**1.175**	**29.85**	**0.225**	**5.72**	**6.000**	**152.40**	**4.715**	**119.77**	**4.713**	**119.71**	**307.53**	**1367.96**	**239.39**	**41.89**	**C1175-225-6000-S**	**4.955**	**125.85**	**217.63**	**968.05**	**208.17**	**36.43**
C1175-225-6250-M	**1.175**	**29.85**	**0.225**	**5.72**	**6.250**	**158.75**	**4.908**	**124.65**	**4.904**	**124.56**	**307.53**	**1367.96**	**229.07**	**40.09**	**C1175-225-6250-S**	**5.157**	**131.00**	**217.63**	**968.05**	**199.20**	**34.86**
C1175-225-6500-M	**1.175**	**29.85**	**0.225**	**5.72**	**6.500**	**165.10**	**5.100**	**129.53**	**5.095**	**129.42**	**307.53**	**1367.96**	**219.61**	**38.43**	**C1175-225-6500-S**	**5.360**	**136.15**	**217.63**	**968.05**	**190.96**	**33.42**
C1175-225-6750-M	**1.175**	**29.85**	**0.225**	**5.72**	**6.750**	**171.45**	**5.292**	**134.41**	**5.286**	**134.27**	**307.53**	**1367.96**	**210.89**	**36.91**	**C1175-225-6750-S**	**5.563**	**141.31**	**217.63**	**968.05**	**183.39**	**32.09**
C1175-225-7000-M	**1.175**	**29.85**	**0.225**	**5.72**	**7.000**	**177.80**	**5.484**	**139.29**	**5.477**	**139.12**	**307.53**	**1367.96**	**202.84**	**35.50**	**C1175-225-7000-S**	**5.766**	**146.46**	**217.63**	**968.05**	**176.39**	**30.87**
C1175-225-7500-M	**1.175**	**29.85**	**0.225**	**5.72**	**7.500**	**190.50**	**5.868**	**149.05**	**5.859**	**148.82**	**307.53**	**1367.96**	**188.46**	**32.98**	**C1175-225-7500-S**	**6.172**	**156.77**	**217.63**	**968.05**	**163.88**	**28.68**
C1175-225-8000-M	**1.175**	**29.85**	**0.225**	**5.72**	**8.000**	**203.20**	**6.252**	**158.81**	**6.241**	**158.53**	**307.53**	**1367.96**	**175.98**	**30.80**	**C1175-225-8000-S**	**6.578**	**167.08**	**217.63**	**968.05**	**153.02**	**26.78**
C1175-225-8500-M	**1.175**	**29.85**	**0.225**	**5.72**	**8.500**	**215.90**	**6.637**	**168.57**	**6.623**	**168.23**	**307.53**	**1367.96**	**165.05**	**28.88**	**C1175-225-8500-S**	**6.984**	**177.38**	**217.63**	**968.05**	**143.52**	**25.12**
C1175-225-9000-M	**1.175**	**29.85**	**0.225**	**5.72**	**9.000**	**228.60**	**7.021**	**178.33**	**7.005**	**177.94**	**307.53**	**1367.96**	**155.40**	**27.19**	**C1175-225-9000-S**	**7.389**	**187.69**	**217.63**	**968.05**	**135.13**	**23.65**
C1175-225-9500-M	**1.175**	**29.85**	**0.225**	**5.72**	**9.500**	**241.30**	**7.405**	**188.09**	**7.387**	**187.64**	**307.53**	**1367.96**	**146.81**	**25.69**	**C1175-225-9500-S**	**7.795**	**198.00**	**217.63**	**968.05**	**127.66**	**22.34**
D13260	1.181	30.00	0.110	2.80	1.850	47.00	0.705	17.90	0.606	15.40	58.20	258.90	50.74	8.88	D23260	0.705	17.90	48.50	215.75	42.29	7.40
D13270	1.181	30.00	0.110	2.80	2.783	70.70	0.980	24.90	0.827	21.00	58.20	258.90	32.29	5.65	D23270	0.980	24.90	48.50	215.75	26.91	4.71
D13780	1.181	30.00	0.197	5.00	1.614	41.00	1.087	27.60	1.083	27.50	352.74	1569.06	666.86	116.70	D23780	1.087	27.60	293.95	1307.55	555.49	97.21
D13790	1.181	30.00	0.197	5.00	2.362	60.00	1.516	38.50	1.476	37.50	352.74	1569.06	423.09	74.04	D23790	1.516	38.50	293.95	1307.55	352.46	61.68
D13800	1.181	30.00	0.197	5.00	3.445	87.50	2.161	54.90	2.067	52.50	352.74	1569.06	273.49	47.86	D23800	2.161	54.90	293.95	1307.55	227.83	39.87
D13810	1.181	30.00	0.197	5.00	4.921	125.00	3.020	76.70	2.854	72.50	352.74	1569.06	186.23	32.59	D23810	3.020	76.70	293.95	1307.55	155.14	27.15
D13820	1.181	30.00	0.197	5.00	7.087	180.00	4.291	109.00	4.035	102.50	352.74	1569.06	125.54	21.97	D23820	4.291	109.00	293.95	1307.55	104.57	18.30
C1218-085-0875-M	**1.218**	**30.94**	**0.085**	**2.16**	**0.875**	**22.23**	**0.357**	**9.06**	**0.279**	**7.08**	**18.97**	**84.37**	**36.60**	**6.41**	**C1218-085-0875-S**	**0.357**	**9.06**	**15.80**	**70.28**	**30.49**	**5.34**
C1218-085-1000-M	**1.218**	**30.94**	**0.085**	**2.16**	**1.000**	**25.40**	**0.396**	**10.05**	**0.303**	**7.70**	**18.80**	**83.62**	**31.10**	**5.44**	**C1218-085-1000-S**	**0.396**	**10.05**	**15.66**	**69.65**	**25.91**	**4.53**
C1218-085-1500-M	**1.218**	**30.94**	**0.085**	**2.16**	**1.500**	**38.10**	**0.551**	**13.99**	**0.403**	**10.23**	**18.41**	**81.90**	**19.40**	**3.40**	**C1218-085-1500-S**	**0.551**	**13.99**	**15.34**	**68.23**	**16.16**	**2.83**
C1218-085-2000-M	**1.218**	**30.94**	**0.085**	**2.16**	**2.000**	**50.80**	**0.706**	**17.94**	**0.502**	**12.74**	**18.24**	**81.15**	**14.10**	**2.47**	**C1218-085-2000-S**	**0.706**	**17.94**	**15.20**	**67.60**	**11.75**	**2.06**
C1218-085-2500-M	**1.218**	**30.94**	**0.085**	**2.16**	**2.500**	**63.50**	**0.855**	**21.73**	**0.593**	**15.07**	**18.26**	**81.21**	**11.10**	**1.94**	**C1218-085-2500-S**	**0.855**	**21.73**	**15.21**	**67.64**	**9.25**	**1.62**
C1218-085-3000-M	**1.218**	**30.94**	**0.085**	**2.16**	**3.000**	**76.20**	**1.004**	**25.50**	**0.685**	**17.39**	**18.16**	**80.79**	**9.10**	**1.59**	**C1218-085-3000-S**	**1.004**	**25.50**	**15.13**	**67.30**	**7.58**	**1.33**
C1218-085-3500-M	**1.218**	**30.94**	**0.085**	**2.16**	**3.500**	**88.90**	**1.147**	**29.14**	**0.769**	**19.53**	**18.35**	**81.63**	**7.80**	**1.37**	**C1218-085-3500-S**	**1.147**	**29.14**	**15.29**	**67.99**	**6.50**	**1.14**
C1218-085-4000-M	**1.218**	**30.94**	**0.085**	**2.16**	**4.000**	**101.60**	**1.301**	**33.04**	**0.866**	**21.99**	**18.08**	**80.44**	**6.70**	**1.17**	**C1218-085-4000-S**	**1.301**	**33.04**	**15.06**	**67.01**	**5.58**	**0.98**
C1218-085-4500-M	**1.218**	**30.94**	**0.085**	**2.16**	**4.500**	**114.30**	**1.441**	**36.60**	**0.946**	**24.03**	**18.36**	**81.65**	**6.00**	**1.05**	**C1218-085-4500-S**	**1.441**	**36.60**	**15.29**	**68.01**	**5.00**	**0.87**
C1218-085-5000-M	**1.218**	**30.94**	**0.085**	**2.16**	**5.000**	**127.00**	**1.598**	**40.58**	**1.047**	**26.60**	**18.03**	**80.21**	**5.30**	**0.93**	**C1218-085-5000-S**	**1.598**	**40.58**	**15.02**	**66.81**	**4.42**	**0.77**
C1218-095-0875-M	**1.218**	**30.94**	**0.095**	**2.41**	**0.875**	**22.23**	**0.385**	**9.77**	**0.309**	**7.85**	**29.23**	**130.01**	**59.60**	**10.43**	**C1218-095-0875-S**	**0.436**	**11.07**	**21.80**	**96.97**	**49.65**	**8.69**
C1218-095-1000-M	**1.218**	**30.94**	**0.095**	**2.41**	**1.000**	**25.40**	**0.423**	**10.74**	**0.337**	**8.56**	**29.09**	**129.41**	**50.40**	**8.82**	**C1218-095-1000-S**	**0.481**	**12.21**	**21.80**	**96.97**	**41.98**	**7.35**
C1218-095-1250-M	**1.218**	**30.94**	**0.095**	**2.41**	**1.250**	**31.75**	**0.506**	**12.85**	**0.393**	**9.99**	**28.65**	**127.45**	**38.50**	**6.74**	**C1218-095-1250-S**	**0.570**	**14.48**	**21.80**	**96.97**	**32.07**	**5.61**
C1218-095-1500-M	**1.218**	**30.94**	**0.095**	**2.41**	**1.500**	**38.10**	**0.589**	**14.96**	**0.450**	**11.42**	**28.33**	**126.01**	**31.10**	**5.44**	**C1218-095-1500-S**	**0.659**	**16.73**	**21.80**	**96.97**	**25.91**	**4.53**
C1218-095-1750-M	**1.218**	**30.94**	**0.095**	**2.41**	**1.750**	**44.45**	**0.672**	**17.08**	**0.506**	**12.86**	**28.13**	**125.12**	**26.10**	**4.57**	**C1218-095-1750-S**	**0.747**	**18.98**	**21.80**	**96.97**	**21.74**	**3.80**
C1218-095-2000-M	**1.218**	**30.94**	**0.095**	**2.41**	**2.000**	**50.80**	**0.755**	**19.18**	**0.562**	**14.29**	**28.01**	**124.58**	**22.50**	**3.94**	**C1218-095-2000-S**	**0.837**	**21.26**	**21.80**	**96.97**	**18.74**	**3.28**
C1218-095-2250-M	**1.218**	**30.94**	**0.095**	**2.41**	**2.250**	**57.15**	**0.836**	**21.24**	**0.616**	**15.65**	**27.99**	**124.52**	**19.80**	**3.47**	**C1218-095-2250-S**	**0.928**	**23.58**	**21.80**	**96.97**	**16.49**	**2.89**
C1218-095-2500-M	**1.218**	**30.94**	**0.095**	**2.41**	**2.500**	**63.50**	**0.916**	**23.26**	**0.668**	**16.97**	**27.88**	**124.02**	**17.60**	**3.08**	**C1218-095-2500-S**	**1.013**	**25.73**	**21.80**	**96.97**	**14.66**	**2.57**
C1218-095-2750-M	**1.218**	**30.94**	**0.095**	**2.41**	**2.750**	**69.85**	**0.994**	**25.24**	**0.718**	**18.24**	**27.92**	**124.21**	**15.90**	**2.78**	**C1218-095-2750-S**	**1.104**	**28.04**	**21.80**	**96.97**	**13.25**	**2.32**
C1218-095-3000-M	**1.218**	**30.94**	**0.095**	**2.41**	**3.000**	**76.20**	**1.072**	**27.23**	**0.768**	**19.51**	**27.96**	**124.36**	**14.50**	**2.54**	**C1218-095-3000-S**	**1.195**	**30.36**	**21.80**	**96.97**	**12.08**	**2.11**
C1218-095-3500-M	**1.218**	**30.94**	**0.095**	**2.41**	**3.500**	**88.90**	**1.229**	**31.22**	**0.870**	**22.10**	**27.93**	**124.24**	**12.30**	**2.15**	**C1218-095-3500-S**	**1.372**	**34.86**	**21.80**	**96.97**	**10.25**	**1.79**
C1218-095-4000-M	**1.218**	**30.94**	**0.095**	**2.41**	**4.000**	**101.60**	**1.385**	**35.19**	**0.970**	**24.64**	**27.98**	**124.44**	**10.70**	**1.87**	**C1218-095-4000-S**	**1.554**	**39.48**	**21.80**	**96.97**	**8.91**	**1.56**
C1218-095-4500-M	**1.218**	**30.94**	**0.095**	**2.41**	**4.500**	**114.30**	**1.539**	**39.10**	**1.068**	**27.12**	**28.13**	**125.12**	**9.50**	**1.66**	**C1218-095-4500-S**	**1.745**	**44.33**	**21.80**	**96.97**	**7.91**	**1.38**

FOR INFORMATION ON ALTERNATIVE FINISHES, SEE PAGE 311

Part Numbers with an "*" are squared and not ground. **Part Numbers in bold** represent the newly expanded Associated Spring RAYMOND compression spring offering.

MUSIC WIRE

Catalog #	Outside Diameter (OD)		Wire Diameter (d)		Free Length (L) Approx		Load Length (L_1)		Solid Height (Sh) Approx		Load (P) at L_1		Spring Rate (R)	
	in	mm	in	mm	in	mm	in	mm	in	mm	lb	N	lb/in	N/mm
C1218-095-5000-M	**1.218**	**30.94**	**0.095**	**2.41**	**5.000**	**127.00**	**1.697**	**43.10**	**1.170**	**29.71**	**28.08**	**124.89**	**8.50**	**1.49**
C1218-105-0875-M	**1.218**	**30.94**	**0.105**	**2.67**	**0.875**	**22.23**	**0.422**	**10.73**	**0.360**	**9.14**	**37.34**	**166.09**	**82.50**	**14.44**
C1218-105-1000-M	**1.218**	**30.94**	**0.105**	**2.67**	**1.000**	**25.40**	**0.470**	**11.93**	**0.395**	**10.03**	**36.86**	**163.96**	**69.50**	**12.16**
C1218-105-1250-M	**1.218**	**30.94**	**0.105**	**2.67**	**1.250**	**31.75**	**0.564**	**14.33**	**0.466**	**11.82**	**36.20**	**161.04**	**52.80**	**9.24**
C1218-105-1500-M	**1.218**	**30.94**	**0.105**	**2.67**	**1.500**	**38.10**	**0.660**	**16.75**	**0.537**	**13.63**	**35.72**	**158.89**	**42.50**	**7.44**
C1218-105-2000-M	**1.218**	**30.94**	**0.105**	**2.67**	**2.000**	**50.80**	**0.847**	**21.51**	**0.676**	**17.16**	**35.40**	**157.46**	**30.70**	**5.37**
C1218-105-2500-M	**1.218**	**30.94**	**0.105**	**2.67**	**2.500**	**63.50**	**1.025**	**26.03**	**0.803**	**20.39**	**35.41**	**157.49**	**24.00**	**4.20**
C1218-105-3000-M	**1.218**	**30.94**	**0.105**	**2.67**	**3.000**	**76.20**	**1.203**	**30.55**	**0.930**	**23.62**	**35.41**	**157.50**	**19.70**	**3.45**
C1218-105-3500-M	**1.218**	**30.94**	**0.105**	**2.67**	**3.500**	**88.90**	**1.381**	**35.07**	**1.057**	**26.85**	**35.39**	**157.43**	**16.70**	**2.92**
C1218-105-4000-M	**1.218**	**30.94**	**0.105**	**2.67**	**4.000**	**101.60**	**1.559**	**39.59**	**1.184**	**30.08**	**35.40**	**157.47**	**14.50**	**2.54**
C1218-105-4500-M	**1.218**	**30.94**	**0.105**	**2.67**	**4.500**	**114.30**	**1.737**	**44.12**	**1.312**	**33.33**	**35.36**	**157.31**	**12.80**	**2.24**
C1218-105-5000-M	**1.218**	**30.94**	**0.105**	**2.67**	**5.000**	**127.00**	**1.912**	**48.57**	**1.435**	**36.46**	**35.51**	**157.96**	**11.50**	**2.01**
C1218-112-0875-M	**1.218**	**30.94**	**0.112**	**2.85**	**0.875**	**22.23**	**0.450**	**11.43**	**0.384**	**9.75**	**46.21**	**205.54**	**108.75**	**19.03**
C1218-112-1000-M	**1.218**	**30.94**	**0.112**	**2.85**	**1.000**	**25.40**	**0.493**	**12.52**	**0.423**	**10.74**	**46.21**	**205.54**	**91.12**	**15.95**
C1218-112-1250-M	**1.218**	**30.94**	**0.112**	**2.85**	**1.250**	**31.75**	**0.592**	**15.03**	**0.500**	**12.69**	**45.41**	**201.99**	**69.00**	**12.08**
C1218-112-1500-M	**1.218**	**30.94**	**0.112**	**2.85**	**1.500**	**38.10**	**0.692**	**17.58**	**0.577**	**14.66**	**44.77**	**199.14**	**55.42**	**9.70**
C1218-112-2000-M	**1.218**	**30.94**	**0.112**	**2.85**	**2.000**	**50.80**	**0.890**	**22.61**	**0.729**	**18.52**	**44.20**	**196.59**	**39.82**	**6.97**
C1218-112-2500-M	**1.218**	**30.94**	**0.112**	**2.85**	**2.500**	**63.50**	**1.078**	**27.37**	**0.868**	**22.05**	**44.19**	**196.57**	**31.07**	**5.44**
C1218-112-3000-M	**1.218**	**30.94**	**0.112**	**2.85**	**3.000**	**76.20**	**1.265**	**32.13**	**1.007**	**25.57**	**44.21**	**196.64**	**25.48**	**4.46**
C1218-112-3500-M	**1.218**	**30.94**	**0.112**	**2.85**	**3.500**	**88.90**	**1.453**	**36.90**	**1.146**	**29.11**	**44.20**	**196.62**	**21.59**	**3.78**
C1218-112-4000-M	**1.218**	**30.94**	**0.112**	**2.85**	**4.000**	**101.60**	**1.640**	**41.66**	**1.285**	**32.64**	**44.20**	**196.61**	**18.73**	**3.28**
C1218-125-0875-M	**1.218**	**30.94**	**0.125**	**3.18**	**0.875**	**22.23**	**0.504**	**12.81**	**0.436**	**11.08**	**62.65**	**278.70**	**169.00**	**29.58**
C1218-125-1000-M	**1.218**	**30.94**	**0.125**	**3.18**	**1.000**	**25.40**	**0.556**	**14.11**	**0.482**	**12.25**	**62.65**	**278.70**	**141.00**	**24.68**
C1218-125-1250-M	**1.218**	**30.94**	**0.125**	**3.18**	**1.250**	**31.75**	**0.656**	**16.67**	**0.576**	**14.62**	**62.65**	**278.70**	**105.50**	**18.46**
C1218-125-1500-M	**1.218**	**30.94**	**0.125**	**3.18**	**1.500**	**38.10**	**0.766**	**19.45**	**0.668**	**16.97**	**62.02**	**275.87**	**84.48**	**14.78**
C1218-125-2000-M	**1.218**	**30.94**	**0.125**	**3.18**	**2.000**	**50.80**	**0.986**	**25.04**	**0.847**	**21.52**	**61.20**	**272.22**	**60.34**	**10.56**
C1218-125-2250-M	**1.218**	**30.94**	**0.125**	**3.18**	**2.250**	**57.15**	**1.091**	**27.72**	**0.931**	**23.65**	**61.12**	**271.87**	**52.75**	**9.23**
C1218-125-2500-M	**1.218**	**30.94**	**0.125**	**3.18**	**2.500**	**63.50**	**1.196**	**30.38**	**1.014**	**25.76**	**61.20**	**272.21**	**46.93**	**8.21**
C1218-125-3000-M	**1.218**	**30.94**	**0.125**	**3.18**	**3.000**	**76.20**	**1.406**	**35.72**	**1.181**	**30.00**	**61.20**	**272.24**	**38.40**	**6.72**
C1218-125-3500-M	**1.218**	**30.94**	**0.125**	**3.18**	**3.500**	**88.90**	**1.616**	**41.06**	**1.348**	**34.25**	**61.20**	**272.21**	**32.49**	**5.69**
C1218-125-4000-M	**1.218**	**30.94**	**0.125**	**3.18**	**4.000**	**101.60**	**1.827**	**46.40**	**1.515**	**38.49**	**61.20**	**272.24**	**28.16**	**4.93**
C1218-125-4500-M	**1.218**	**30.94**	**0.125**	**3.18**	**4.500**	**114.30**	**2.036**	**51.71**	**1.681**	**42.70**	**61.29**	**272.61**	**24.87**	**4.35**
C1218-125-5000-M	**1.218**	**30.94**	**0.125**	**3.18**	**5.000**	**127.00**	**2.246**	**57.05**	**1.848**	**46.94**	**61.28**	**272.57**	**22.25**	**3.89**
C1218-135-0875-M	**1.218**	**30.94**	**0.135**	**3.43**	**0.875**	**22.23**	**0.565**	**14.35**	**0.457**	**11.62**	**77.51**	**344.79**	**250.00**	**43.75**
C1218-135-1000-M	**1.218**	**30.94**	**0.135**	**3.43**	**1.000**	**25.40**	**0.626**	**15.89**	**0.507**	**12.87**	**77.51**	**344.79**	**207.00**	**36.23**
C1218-135-1250-M	**1.218**	**30.94**	**0.135**	**3.43**	**1.250**	**31.75**	**0.747**	**18.97**	**0.605**	**15.37**	**77.51**	**344.79**	**154.00**	**26.95**
C1218-135-1500-M	**1.218**	**30.94**	**0.135**	**3.43**	**1.500**	**38.10**	**0.869**	**22.07**	**0.702**	**17.84**	**77.51**	**344.79**	**122.85**	**21.50**
C1218-135-2000-M	**1.218**	**30.94**	**0.135**	**3.43**	**2.000**	**50.80**	**1.113**	**28.26**	**0.894**	**22.70**	**77.51**	**344.79**	**87.34**	**15.28**
C1218-135-2500-M	**1.218**	**30.94**	**0.135**	**3.43**	**2.500**	**63.50**	**1.356**	**34.44**	**1.070**	**27.17**	**77.51**	**344.79**	**67.76**	**11.86**
C1218-135-3000-M	**1.218**	**30.94**	**0.135**	**3.43**	**3.000**	**76.20**	**1.600**	**40.63**	**1.246**	**31.65**	**77.51**	**344.79**	**55.35**	**9.69**
C1218-135-3500-M	**1.218**	**30.94**	**0.135**	**3.43**	**3.500**	**88.90**	**1.843**	**46.81**	**1.422**	**36.13**	**77.51**	**344.79**	**46.78**	**8.19**
C1218-135-4000-M	**1.218**	**30.94**	**0.135**	**3.43**	**4.000**	**101.60**	**2.087**	**53.00**	**1.599**	**40.61**	**77.51**	**344.79**	**40.51**	**7.09**
C1225-085-0875-M	1.225	31.12	0.085	2.16	0.880	22.35	0.487	12.37	0.330	8.38	14.40	64.05	36.60	6.41
C1225-085-1000-M	1.225	31.12	0.085	2.16	1.000	25.40	0.537	13.64	0.351	8.92	14.40	64.05	31.10	5.44
C1225-085-1500-M	1.225	31.12	0.085	2.16	1.500	38.10	0.759	19.28	0.434	11.02	14.40	64.05	19.40	3.40
C1225-085-2000-M	1.225	31.12	0.085	2.16	2.000	50.80	0.980	24.89	0.518	13.16	14.40	64.05	14.10	2.47
C1225-085-2500-M	1.225	31.12	0.085	2.16	2.500	63.50	1.201	30.51	0.601	15.27	14.40	64.05	11.10	1.94
C1225-085-3000-M	1.225	31.12	0.085	2.16	3.000	76.20	1.423	36.14	0.684	17.37	14.40	64.05	9.10	1.59
C1225-085-3500-M	1.225	31.12	0.085	2.16	3.500	88.90	1.644	41.76	0.768	19.51	14.40	64.05	7.80	1.37
C1225-085-4000-M	1.225	31.12	0.085	2.16	4.000	101.60	1.865	47.37	0.851	21.62	14.40	64.05	6.70	1.17
C1225-085-4500-M	1.225	31.12	0.085	2.16	4.500	114.30	2.087	53.01	0.934	23.72	14.40	64.05	6.00	1.05
C1225-085-5000-M	1.225	31.12	0.085	2.16	5.000	127.00	2.308	58.62	1.018	25.86	14.40	64.05	5.30	0.93
C1225-096-0875-M	1.225	31.12	0.096	2.44	0.880	22.35	0.541	13.74	0.377	9.58	20.20	89.85	59.60	10.43
C1225-096-1000-M	1.225	31.12	0.096	2.44	1.000	25.40	0.599	15.21	0.402	10.21	20.20	89.85	50.40	8.82
C1225-096-1250-M	1.225	31.12	0.096	2.44	1.250	31.75	0.725	18.42	0.452	11.48	20.20	89.85	38.50	6.74
C1225-096-1500-M	1.225	31.12	0.096	2.44	1.500	38.10	0.851	21.62	0.502	12.75	20.20	89.85	31.10	5.44
C1225-096-1750-M	1.225	31.12	0.096	2.44	1.750	44.45	0.977	24.82	0.552	14.02	20.20	89.85	26.10	4.57
C1225-096-2000-M	1.225	31.12	0.096	2.44	2.000	50.80	1.103	28.02	0.602	15.29	20.20	89.85	22.50	3.94
C1225-096-2250-M	1.225	31.12	0.096	2.44	2.250	57.15	1.229	31.22	0.652	16.56	20.20	89.85	19.80	3.47
C1225-096-2500-M	1.225	31.12	0.096	2.44	2.500	63.50	1.355	34.42	0.702	17.83	20.20	89.85	17.60	3.08
C1225-096-2750-M	1.225	31.12	0.096	2.44	2.750	69.85	1.481	37.62	0.752	19.10	20.20	89.85	15.90	2.78
C1225-096-3000-M	1.225	31.12	0.096	2.44	3.000	76.20	1.607	40.82	0.802	20.37	20.20	89.85	14.50	2.54
C1225-096-3500-M	1.225	31.12	0.096	2.44	3.500	88.90	1.859	47.22	0.902	22.91	20.20	89.85	12.30	2.15
C1225-096-4000-M	1.225	31.12	0.096	2.44	4.000	101.60	2.111	53.62	1.002	25.45	20.20	89.85	10.70	1.87

STAINLESS STEEL

Catalog #	Load Length (L_1)		Load (P) at L_1		Spring Rate (R)	
	in	mm	lb	N	lb/in	N/mm
C1218-095-5000-S	**1.921**	**48.80**	**21.80**	**96.97**	**7.08**	**1.24**
C1218-105-0875-S	**0.459**	**11.65**	**28.61**	**127.27**	**68.72**	**12.03**
C1218-105-1000-S	**0.506**	**12.85**	**28.61**	**127.27**	**57.89**	**10.13**
C1218-105-1250-S	**0.599**	**15.23**	**28.61**	**127.27**	**43.98**	**7.70**
C1218-105-1500-S	**0.692**	**17.57**	**28.61**	**127.27**	**35.40**	**6.20**
C1218-105-2000-S	**0.881**	**22.38**	**28.61**	**127.27**	**25.57**	**4.48**
C1218-105-2500-S	**1.069**	**27.15**	**28.61**	**127.27**	**19.99**	**3.50**
C1218-105-3000-S	**1.256**	**31.91**	**28.61**	**127.27**	**16.41**	**2.87**
C1218-105-3500-S	**1.443**	**36.66**	**28.61**	**127.27**	**13.91**	**2.43**
C1218-105-4000-S	**1.631**	**41.43**	**28.61**	**127.27**	**12.08**	**2.11**
C1218-105-4500-S	**1.817**	**46.14**	**28.61**	**127.27**	**10.66**	**1.87**
C1218-105-5000-S	**2.013**	**51.14**	**28.61**	**127.27**	**9.58**	**1.68**
C1218-112-0875-S	**0.499**	**12.67**	**34.06**	**151.52**	**90.59**	**15.85**
C1218-112-1000-S	**0.551**	**14.00**	**34.06**	**151.52**	**75.90**	**13.28**
C1218-112-1250-S	**0.657**	**16.70**	**34.06**	**151.52**	**57.48**	**10.06**
C1218-112-1500-S	**0.762**	**19.36**	**34.06**	**151.52**	**46.17**	**8.08**
C1218-112-2000-S	**0.973**	**24.72**	**34.06**	**151.52**	**33.17**	**5.80**
C1218-112-2500-S	**1.184**	**30.07**	**34.06**	**151.52**	**25.88**	**4.53**
C1218-112-3000-S	**1.395**	**35.44**	**34.06**	**151.52**	**21.23**	**3.71**
C1218-112-3500-S	**1.606**	**40.79**	**34.06**	**151.52**	**17.98**	**3.15**
C1218-112-4000-S	**1.817**	**46.15**	**34.06**	**151.52**	**15.60**	**2.73**
C1218-125-0875-S	**0.550**	**13.97**	**45.75**	**203.51**	**140.78**	**24.64**
C1218-125-1000-S	**0.610**	**15.51**	**45.75**	**203.51**	**117.45**	**20.55**
C1218-125-1250-S	**0.729**	**18.53**	**45.75**	**203.51**	**87.88**	**15.38**
C1218-125-1500-S	**0.850**	**21.59**	**45.75**	**203.51**	**70.37**	**12.32**
C1218-125-2000-S	**1.090**	**27.68**	**45.75**	**203.51**	**50.26**	**8.80**
C1218-125-2250-S	**1.209**	**30.70**	**45.75**	**203.51**	**43.94**	**7.69**
C1218-125-2500-S	**1.330**	**33.77**	**45.75**	**203.51**	**39.09**	**6.84**
C1218-125-3000-S	**1.570**	**39.87**	**45.75**	**203.51**	**31.99**	**5.60**
C1218-125-3500-S	**1.810**	**45.96**	**45.75**	**203.51**	**27.06**	**4.74**
C1218-125-4000-S	**2.050**	**52.06**	**45.75**	**203.51**	**23.46**	**4.10**
C1218-125-4500-S	**2.292**	**58.21**	**45.75**	**203.51**	**20.72**	**3.63**
C1218-125-5000-S	**2.532**	**64.30**	**45.75**	**203.51**	**18.53**	**3.24**
C1218-135-0875-S	**0.605**	**15.37**	**56.18**	**249.90**	**208.25**	**36.44**
C1218-135-1000-S	**0.674**	**17.12**	**56.18**	**249.90**	**172.43**	**30.18**
C1218-135-1250-S	**0.812**	**20.63**	**56.18**	**249.90**	**128.28**	**22.45**
C1218-135-1500-S	**0.951**	**24.16**	**56.18**	**249.90**	**102.33**	**17.91**
C1218-135-2000-S	**1.228**	**31.19**	**56.18**	**249.90**	**72.75**	**12.73**
C1218-135-2500-S	**1.505**	**38.22**	**56.18**	**249.90**	**56.44**	**9.88**
C1218-135-3000-S	**1.782**	**45.25**	**56.18**	**249.90**	**46.11**	**8.07**
C1218-135-3500-S	**2.058**	**52.28**	**56.18**	**249.90**	**38.97**	**6.82**
C1218-135-4000-S	**2.335**	**59.31**	**56.18**	**249.90**	**33.75**	**5.91**
C1225-085-0875-S	0.487	12.37	12.00	53.36	30.49	5.34
C1225-085-1000-S	0.537	13.64	12.00	53.36	25.91	4.53
C1225-085-1500-S	0.759	19.28	12.00	53.36	16.16	2.83
C1225-085-2000-S	0.980	24.89	12.00	53.36	11.75	2.06
C1225-085-2500-S	1.201	30.51	12.00	53.36	9.25	1.62
C1225-085-3000-S	1.423	36.14	12.00	53.36	7.58	1.33
C1225-085-3500-S	1.644	41.76	12.00	53.36	6.50	1.14
C1225-085-4000-S	1.865	47.37	12.00	53.36	5.58	0.98
C1225-085-4500-S	2.087	53.01	12.00	53.36	5.00	0.87
C1225-085-5000-S	2.308	58.62	12.00	53.36	4.42	0.77
C1225-096-0875-S	0.541	13.74	16.83	74.85	49.65	8.69
C1225-096-1000-S	0.599	15.21	16.83	74.85	41.98	7.35
C1225-096-1250-S	0.725	18.42	16.83	74.85	32.07	5.61
C1225-096-1500-S	0.851	21.62	16.83	74.85	25.91	4.53
C1225-096-1750-S	0.977	24.82	16.83	74.85	21.74	3.80
C1225-096-2000-S	1.103	28.02	16.83	74.85	18.74	3.28
C1225-096-2250-S	1.229	31.22	16.83	74.85	16.49	2.89
C1225-096-2500-S	1.355	34.42	16.83	74.85	14.66	2.57
C1225-096-2750-S	1.481	37.62	16.83	74.85	13.25	2.32
C1225-096-3000-S	1.607	40.82	16.83	74.85	12.08	2.11
C1225-096-3500-S	1.859	47.22	16.83	74.85	10.25	1.79
C1225-096-4000-S	2.111	53.62	16.83	74.85	8.91	1.56

Part Numbers with an "*" are squared and not ground. **Part Numbers in bold** represent the newly expanded Associated Spring RAYMOND compression spring offering.

MUSIC WIRE															STAINLESS STEEL					
Catalog #	Outside Diameter (OD)		Wire Diameter (d)		Free Length (L) Approx		Load Length (L_1)		Solid Height (Sh) Approx		Load (P) at L_1		Spring Rate (R)		Catalog #	Load Length (L_1)		Load (P) at L_1		Spring Rate (R)	
	in	mm	in	mm	in	mm	in	mm	in	mm	lb	N	lb/in	N/mm		in	mm	lb	N	lb/in	N/mm
C1225-096-4500-M	1.225	31.12	0.096	2.44	4.500	114.30	2.363	60.02	1.102	27.99	20.20	89.85	9.50	1.66	C1225-096-4500-S	2.363	60.02	16.83	74.85	7.91	1.38
C1225-096-5000-M	1.225	31.12	0.096	2.44	5.000	127.00	2.615	66.42	1.202	30.53	20.20	89.85	8.50	1.49	C1225-096-5000-S	2.615	66.42	16.83	74.85	7.08	1.24
C1225-105-0875-M	1.225	31.12	0.105	2.67	0.880	22.35	0.566	14.38	0.421	10.69	25.93	115.34	82.50	14.44	C1225-105-0875-S	0.566	14.38	21.60	96.08	68.72	12.03
C1225-105-1000-M	1.225	31.12	0.105	2.67	1.000	25.40	0.627	15.93	0.450	11.43	25.93	115.34	69.50	12.16	C1225-105-1000-S	0.627	15.93	21.60	96.08	57.89	10.13
C1225-105-1250-M	1.225	31.12	0.105	2.67	1.250	31.75	0.759	19.28	0.510	12.95	25.93	115.34	52.80	9.24	C1225-105-1250-S	0.759	19.28	21.60	96.08	43.98	7.70
C1225-105-1500-M	1.225	31.12	0.105	2.67	1.500	38.10	0.891	22.63	0.569	14.45	25.93	115.34	42.50	7.44	C1225-105-1500-S	0.891	22.63	21.60	96.08	35.40	6.20
C1225-105-2000-M	1.225	31.12	0.105	2.67	2.000	50.80	1.154	29.31	0.688	17.48	25.93	115.34	30.70	5.37	C1225-105-2000-S	1.154	29.31	21.60	96.08	25.57	4.48
C1225-105-2500-M	1.225	31.12	0.105	2.67	2.500	63.50	1.418	36.02	0.807	20.50	25.93	115.34	24.00	4.20	C1225-105-2500-S	1.418	36.02	21.60	96.08	19.99	3.50
C1225-105-3000-M	1.225	31.12	0.105	2.67	3.000	76.20	1.682	42.72	0.926	23.52	25.93	115.34	19.70	3.45	C1225-105-3000-S	1.682	42.72	21.60	96.08	16.41	2.87
C1225-105-3500-M	1.225	31.12	0.105	2.67	3.500	88.90	1.946	49.43	1.045	26.54	25.93	115.34	16.70	2.92	C1225-105-3500-S	1.946	49.43	21.60	96.08	13.91	2.43
C1225-105-4000-M	1.225	31.12	0.105	2.67	4.000	101.60	2.209	56.11	1.164	29.57	25.93	115.34	14.50	2.54	C1225-105-4000-S	2.209	56.11	21.60	96.08	12.08	2.11
C1225-105-4500-M	1.225	31.12	0.105	2.67	4.500	114.30	2.473	62.81	1.283	32.59	25.93	115.34	12.80	2.24	C1225-105-4500-S	2.473	62.81	21.60	96.08	10.66	1.87
C1225-105-5000-M	1.225	31.12	0.105	2.67	5.000	127.00	2.737	69.52	1.402	35.61	25.93	115.34	11.50	2.01	C1225-105-5000-S	2.737	69.52	21.60	96.08	9.58	1.68
C1225-112-0875-M	1.225	31.12	0.112	2.85	0.880	22.35	0.585	14.86	0.455	11.56	31.03	138.03	105.10	18.39	C1225-112-0875-S	0.585	14.86	25.85	114.98	87.55	15.32
C1225-112-1000-M	1.225	31.12	0.112	2.85	1.000	25.40	0.648	16.46	0.488	12.40	31.03	138.03	88.20	15.44	C1225-112-1000-S	0.648	16.46	25.85	114.98	73.47	12.86
C1225-112-1250-M	1.225	31.12	0.112	2.85	1.250	31.75	0.785	19.94	0.556	14.12	31.03	138.03	66.70	11.67	C1225-112-1250-S	0.785	19.94	25.85	114.98	55.56	9.72
C1225-112-1500-M	1.225	31.12	0.112	2.85	1.500	38.10	0.921	23.39	0.623	15.82	31.03	138.03	53.60	9.38	C1225-112-1500-S	0.921	23.39	25.85	114.98	44.65	7.81
C1225-112-2000-M	1.225	31.12	0.112	2.85	2.000	50.80	1.195	30.35	0.757	19.23	31.03	138.03	38.50	6.74	C1225-112-2000-S	1.195	30.35	25.85	114.98	32.07	5.61
C1225-112-2500-M	1.225	31.12	0.112	2.85	2.500	63.50	1.468	37.29	0.891	22.63	31.03	138.03	30.10	5.27	C1225-112-2500-S	1.468	37.29	25.85	114.98	25.07	4.39
C1225-112-3000-M	1.225	31.12	0.112	2.85	3.000	76.20	1.741	44.22	1.026	26.06	31.03	138.03	24.60	4.31	C1225-112-3000-S	1.741	44.22	25.85	114.98	20.49	3.59
C1225-112-3500-M	1.225	31.12	0.112	2.85	3.500	88.90	2.014	51.16	1.160	29.46	31.03	138.03	20.90	3.66	C1225-112-3500-S	2.014	51.16	25.85	114.98	17.41	3.05
C1225-112-4000-M	1.225	31.12	0.112	2.85	4.000	101.60	2.288	58.12	1.294	32.87	31.03	138.03	18.10	3.17	C1225-112-4000-S	2.288	58.12	25.85	114.98	15.08	2.64
C1225-125-0875-M	1.225	31.12	0.125	3.18	0.880	22.35	0.619	15.72	0.517	13.13	42.07	187.14	161.30	28.23	C1225-125-0875-S	0.619	15.72	35.04	155.88	134.36	23.51
C1225-125-1000-M	1.225	31.12	0.125	3.18	1.000	25.40	0.687	17.45	0.558	14.17	42.07	187.14	134.40	23.52	C1225-125-1000-S	0.687	17.45	35.04	155.88	111.96	19.59
C1225-125-1250-M	1.225	31.12	0.125	3.18	1.250	31.75	0.833	21.16	0.639	16.23	42.07	187.14	100.80	17.64	C1225-125-1250-S	0.833	21.16	35.04	155.88	83.97	14.69
C1225-125-1500-M	1.225	31.12	0.125	3.18	1.500	38.10	0.978	24.84	0.721	18.31	42.07	187.14	80.60	14.11	C1225-125-1500-S	0.978	24.84	35.04	155.88	67.14	11.75
C1225-125-1750-M	1.225	31.12	0.125	3.18	1.750	44.45	1.124	28.55	0.803	20.40	42.07	187.14	67.20	11.76	C1225-125-1750-S	1.124	28.55	35.04	155.88	55.98	9.80
C1225-125-2000-M	1.225	31.12	0.125	3.18	2.000	50.80	1.270	32.26	0.885	22.48	42.07	187.14	57.60	10.08	C1225-125-2000-S	1.270	32.26	35.04	155.88	47.98	8.40
C1225-125-2250-M	1.225	31.12	0.125	3.18	2.250	57.15	1.415	35.94	0.966	24.54	42.07	187.14	50.40	8.82	C1225-125-2250-S	1.415	35.94	35.04	155.88	41.98	7.35
C1225-125-2500-M	1.225	31.12	0.125	3.18	2.500	63.50	1.561	39.65	1.048	26.62	42.07	187.14	44.80	7.84	C1225-125-2500-S	1.561	39.65	35.04	155.88	37.32	6.53
C1225-125-2750-M	1.225	31.12	0.125	3.18	2.750	69.85	1.707	43.36	1.130	28.70	42.07	187.14	40.30	7.05	C1225-125-2750-S	1.707	43.36	35.04	155.88	33.57	5.87
C1225-125-3000-M	1.225	31.12	0.125	3.18	3.000	76.20	1.852	47.04	1.212	30.78	42.07	187.14	36.70	6.42	C1225-125-3000-S	1.852	47.04	35.04	155.88	30.57	5.35
C1225-125-3500-M	1.225	31.12	0.125	3.18	3.500	88.90	2.144	54.46	1.375	34.93	42.07	187.14	31.00	5.43	C1225-125-3500-S	2.144	54.46	35.04	155.88	25.82	4.52
C1225-125-4000-M	1.225	31.12	0.125	3.18	4.000	101.60	2.435	61.85	1.539	39.09	42.07	187.14	26.90	4.71	C1225-125-4000-S	2.435	61.85	35.04	155.88	22.41	3.92
C1225-125-4500-M	1.225	31.12	0.125	3.18	4.500	114.30	2.726	69.24	1.702	43.23	42.07	187.14	23.70	4.15	C1225-125-4500-S	2.726	69.24	35.04	155.88	19.74	3.45
C1225-125-5000-M	1.225	31.12	0.125	3.18	5.000	127.00	3.018	76.66	1.865	47.37	42.07	187.14	21.20	3.71	C1225-125-5000-S	3.018	76.66	35.04	155.88	17.66	3.09
C1225-135-0880-M	1.225	31.12	0.135	3.43	0.880	22.35	0.643	16.33	0.565	14.35	52.03	231.44	219.20	38.36	C1225-135-0880-S	0.643	16.33	43.34	192.79	182.59	31.95
C1225-135-1000-M	1.225	31.12	0.135	3.43	1.000	25.40	0.716	18.19	0.609	15.47	52.03	231.44	183.10	32.04	C1225-135-1000-S	0.716	18.19	43.34	192.79	152.52	26.69
C1225-135-1250-M	1.225	31.12	0.135	3.43	1.250	31.75	0.869	22.07	0.702	17.83	52.03	231.44	136.40	23.87	C1225-135-1250-S	0.869	22.07	43.34	192.79	113.62	19.88
C1225-135-1500-M	1.225	31.12	0.135	3.43	1.500	38.10	1.021	25.93	0.795	20.19	52.03	231.44	108.70	19.02	C1225-135-1500-S	1.021	25.93	43.34	192.79	90.55	15.85
C1225-135-2000-M	1.225	31.12	0.135	3.43	2.000	50.80	1.327	33.71	0.982	24.94	52.03	231.44	77.30	13.53	C1225-135-2000-S	1.327	33.71	43.34	192.79	64.39	11.27
C1225-135-2500-M	1.225	31.12	0.135	3.43	2.500	63.50	1.632	41.45	1.168	29.67	52.03	231.44	60.00	10.50	C1225-135-2500-S	1.632	41.45	43.34	192.79	49.98	8.75
C1225-135-3000-M	1.225	31.12	0.135	3.43	3.000	76.20	1.938	49.23	1.354	34.39	52.03	231.44	49.00	8.58	C1225-135-3000-S	1.938	49.23	43.34	192.79	40.82	7.14
C1225-135-3500-M	1.225	31.12	0.135	3.43	3.500	88.90	2.243	56.97	1.540	39.12	52.03	231.44	41.40	7.25	C1225-135-3500-S	2.243	56.97	43.34	192.79	34.49	6.04
C1225-148-0880-M	1.225	31.12	0.148	3.76	0.880	22.35	0.674	17.12	0.621	15.77	67.00	298.03	325.00	56.88	C1225-148-0880-S	0.674	17.12	55.81	248.26	270.73	47.38
C1225-148-1000-M	1.225	31.12	0.148	3.76	1.000	25.40	0.751	19.08	0.673	17.09	67.00	298.03	269.60	47.18	C1225-148-1000-S	0.751	19.08	55.81	248.26	224.58	39.30
C1225-148-1250-M	1.225	31.12	0.148	3.76	1.250	31.75	0.913	23.19	0.781	19.84	67.00	298.03	198.90	34.81	C1225-148-1250-S	0.913	23.19	55.81	248.26	165.68	28.99
C1225-148-1500-M	1.225	31.12	0.148	3.76	1.500	38.10	1.075	27.31	0.888	22.56	67.00	298.03	157.60	27.58	C1225-148-1500-S	1.075	27.31	55.81	248.26	131.28	22.97
C1225-148-2000-M	1.225	31.12	0.148	3.76	2.000	50.80	1.398	35.51	1.104	28.04	67.00	298.03	111.40	19.50	C1225-148-2000-S	1.398	35.51	55.81	248.26	92.80	16.24
C1225-148-2500-M	1.225	31.12	0.148	3.76	2.500	63.50	1.722	43.74	1.319	33.50	67.00	298.03	86.10	15.07	C1225-148-2500-S	1.722	43.74	55.81	248.26	71.72	12.55
C1225-148-3000-M	1.225	31.12	0.148	3.76	3.000	76.20	2.045	51.94	1.534	38.96	67.00	298.03	70.20	12.29	C1225-148-3000-S	2.045	51.94	55.81	248.26	58.48	10.23
C1225-148-3500-M	1.225	31.12	0.148	3.76	3.500	88.90	2.369	60.17	1.749	44.42	67.00	298.03	59.20	10.36	C1225-148-3500-S	2.369	60.17	55.81	248.26	49.31	8.63
C1225-148-4000-M	1.225	31.12	0.148	3.76	4.000	101.60	2.692	68.38	1.965	49.91	67.00	298.03	51.20	8.96	C1225-148-4000-S	2.692	68.38	55.81	248.26	42.65	7.46
C1225-148-4500-M	1.225	31.12	0.148	3.76	4.500	114.30	3.016	76.61	2.180	55.37	67.00	298.03	45.10	7.89	C1225-148-4500-S	3.016	76.61	55.81	248.26	37.57	6.57
C1225-148-5000-M	1.225	31.12	0.148	3.76	5.000	127.00	3.339	84.81	2.395	60.83	67.00	298.03	40.30	7.05	C1225-148-5000-S	3.339	84.81	55.81	248.26	33.57	5.87
C1225-162-1000-M	1.225	31.12	0.162	4.12	1.000	25.40	0.793	20.14	0.727	18.47	85.90	382.10	414.60	72.56	C1225-162-1000-S	0.793	20.14	71.55	318.29	345.36	60.44
C1225-162-1500-M	1.225	31.12	0.162	4.12	1.500	38.10	1.140	28.96	0.965	24.51	85.90	382.10	238.30	41.70	C1225-162-1500-S	1.140	28.96	71.55	318.29	198.50	34.74
C1225-162-2000-M	1.225	31.12	0.162	4.12	2.000	50.80	1.486	37.74	1.204	30.58	85.90	382.10	167.20	29.26	C1225-162-2000-S	1.486	37.74	71.55	318.29	139.28	24.37
C1225-162-2500-M	1.225	31.12	0.162	4.12	2.500	63.50	1.833	46.56	1.442	36.63	85.90	382.10	128.80	22.54	C1225-162-2500-S	1.833	46.56	71.55	318.29	107.29	18.78
C1225-162-3000-M	1.225	31.12	0.162	4.12	3.000	76.20	2.180	55.37	1.680	42.67	85.90	382.10	104.70	18.32	C1225-162-3000-S	2.180	55.37	71.55	318.29	87.22	15.26
C1225-162-3500-M	1.225	31.12	0.162	4.12	3.500	88.90	2.526	64.16	1.918	48.72	85.90	382.10	88.20	15.44	C1225-162-3500-S	2.526	64.16	71.55	318.29	73.47	12.86
C1225-162-4000-M	1.225	31.12	0.162	4.12	4.000	101.60	2.873	72.97	2.157	54.79	85.90	382.10	76.20	13.34	C1225-162-4000-S	2.873	72.97	71.55	318.29	63.48	11.11
C1225-162-4500-M	1.225	31.12	0.162	4.12	4.500	114.30	3.220	81.79	2.395	60.83	85.90	382.10	67.10	11.74	C1225-162-4500-S	3.220	81.79	71.55	318.29	55.89	9.78
C1225-162-5000-M	1.225	31.12	0.162	4.12	5.000	127.00	3.567	90.60	2.633	66.88	85.90	382.10	59.90	10.48	C1225-162-5000-S	3.567	90.60	71.55	318.29	49.90	8.73

FOR INFORMATION ON ALTERNATIVE FINISHES, SEE PAGE 311

Part Numbers with an "*" are squared and not ground. **Part Numbers in bold** represent the newly expanded Associated Spring RAYMOND compression spring offering.

MUSIC WIRE

Catalog #	Outside Diameter (OD)		Wire Diameter (d)		Free Length (L) Approx		Load Length (L_1)		Solid Height (Sh) Approx		Load (P) at L_1		Spring Rate (R)	
	in	mm	in	mm	in	mm	in	mm	in	mm	lb	N	lb/in	N/mm
C1225-177-1500-M	1.225	31.12	0.177	4.50	1.500	38.10	1.190	30.23	1.057	26.85	109.36	486.46	353.00	61.78
C1225-177-2000-M	1.225	31.12	0.177	4.50	2.000	50.80	1.555	39.50	1.325	33.66	109.36	486.46	245.80	43.02
C1225-177-2500-M	1.225	31.12	0.177	4.50	2.500	63.50	1.920	48.77	1.594	40.49	109.36	486.46	188.50	32.99
C1225-177-3000-M	1.225	31.12	0.177	4.50	3.000	76.20	2.285	58.04	1.862	47.29	109.36	486.46	152.90	26.76
C1225-177-3500-M	1.225	31.12	0.177	4.50	3.500	88.90	2.650	67.31	2.130	54.10	109.36	486.46	128.60	22.51
C1225-177-4000-M	1.225	31.12	0.177	4.50	4.000	101.60	3.014	76.56	2.398	60.91	109.36	486.46	110.90	19.41
C1225-177-4500-M	1.225	31.12	0.177	4.50	4.500	114.30	3.379	85.83	2.666	67.72	109.36	486.46	97.60	17.08
C1225-177-5000-M	1.225	31.12	0.177	4.50	5.000	127.00	3.744	95.10	2.934	74.52	109.36	486.46	87.10	15.24
C1225-192-1500-M	1.225	31.12	0.192	4.88	1.500	38.10	1.236	31.39	1.139	28.93	136.13	605.54	516.10	90.32
C1225-192-2000-M	1.225	31.12	0.192	4.88	2.000	50.80	1.618	41.10	1.435	36.45	136.13	605.54	356.40	62.37
C1225-192-2500-M	1.225	31.12	0.192	4.88	2.500	63.50	2.000	50.80	1.730	43.94	136.13	605.54	272.20	47.64
C1225-192-3000-M	1.225	31.12	0.192	4.88	3.000	76.20	2.382	60.50	2.025	51.44	136.13	605.54	220.20	38.54
C1225-192-3500-M	1.225	31.12	0.192	4.88	3.500	88.90	2.764	70.21	2.321	58.95	136.13	605.54	184.80	32.34
C1225-192-4000-M	1.225	31.12	0.192	4.88	4.000	101.60	3.145	79.88	2.616	66.45	136.13	605.54	159.30	27.88
C1225-192-4500-M	1.225	31.12	0.192	4.88	4.500	114.30	3.527	89.59	2.912	73.96	136.13	605.54	139.90	24.48
C1225-192-5000-M	1.225	31.12	0.192	4.88	5.000	127.00	3.909	99.29	3.207	81.46	136.13	605.54	124.80	21.84
C1225-207-2000-M	1.225	31.12	0.207	5.26	2.000	50.80	1.669	42.39	1.543	39.19	166.93	742.54	504.80	88.34
C1225-207-2500-M	1.225	31.12	0.207	5.26	2.500	63.50	2.065	52.45	1.867	47.42	166.93	742.54	383.80	67.17
C1225-207-3000-M	1.225	31.12	0.207	5.26	3.000	76.20	2.461	62.51	2.190	55.63	166.93	742.54	309.60	54.18
C1225-207-3500-M	1.225	31.12	0.207	5.26	3.500	88.90	2.857	72.57	2.514	63.86	166.93	742.54	259.40	45.40
C1225-207-4000-M	1.225	31.12	0.207	5.26	4.000	101.60	3.252	82.60	2.837	72.06	166.93	742.54	223.20	39.06
C1225-207-4500-M	1.225	31.12	0.207	5.26	4.500	114.30	3.648	92.66	3.161	80.29	166.93	742.54	195.90	34.28
C1225-207-5000-M	1.225	31.12	0.207	5.26	5.000	127.00	4.044	102.72	3.484	88.49	166.93	742.54	174.60	30.56
C1234-098-2250-M	**1.234**	**31.34**	**0.098**	**2.49**	**2.250**	**57.15**	**0.854**	**21.68**	**0.638**	**16.19**	**30.10**	**133.89**	**21.56**	**3.77**
C1234-098-2375-M	**1.234**	**31.34**	**0.098**	**2.49**	**2.375**	**60.33**	**0.894**	**22.70**	**0.664**	**16.86**	**30.10**	**133.89**	**20.32**	**3.56**
C1234-098-2500-M	**1.234**	**31.34**	**0.098**	**2.49**	**2.500**	**63.50**	**0.934**	**23.71**	**0.690**	**17.53**	**30.10**	**133.89**	**19.22**	**3.36**
C1234-098-2625-M	**1.234**	**31.34**	**0.098**	**2.49**	**2.625**	**66.68**	**0.974**	**24.73**	**0.716**	**18.20**	**30.10**	**133.89**	**18.23**	**3.19**
C1234-098-2750-M	**1.234**	**31.34**	**0.098**	**2.49**	**2.750**	**69.85**	**1.014**	**25.75**	**0.743**	**18.86**	**30.10**	**133.89**	**17.34**	**3.03**
C1234-098-2875-M	**1.234**	**31.34**	**0.098**	**2.49**	**2.875**	**73.03**	**1.054**	**26.76**	**0.769**	**19.53**	**30.10**	**133.89**	**16.53**	**2.89**
C1234-098-3000-M	**1.234**	**31.34**	**0.098**	**2.49**	**3.000**	**76.20**	**1.094**	**27.78**	**0.795**	**20.20**	**30.10**	**133.89**	**15.79**	**2.76**
C1234-098-3250-M	**1.234**	**31.34**	**0.098**	**2.49**	**3.250**	**82.55**	**1.174**	**29.81**	**0.848**	**21.53**	**30.10**	**133.89**	**14.50**	**2.54**
C1234-098-3500-M	**1.234**	**31.34**	**0.098**	**2.49**	**3.500**	**88.90**	**1.254**	**31.85**	**0.900**	**22.87**	**30.10**	**133.89**	**13.40**	**2.35**
C1234-098-3750-M	**1.234**	**31.34**	**0.098**	**2.49**	**3.750**	**95.25**	**1.334**	**33.88**	**0.953**	**24.20**	**30.10**	**133.89**	**12.46**	**2.18**
C1234-098-4000-M	**1.234**	**31.34**	**0.098**	**2.49**	**4.000**	**101.60**	**1.414**	**35.91**	**1.005**	**25.54**	**30.10**	**133.89**	**11.64**	**2.04**
C1234-098-4250-M	**1.234**	**31.34**	**0.098**	**2.49**	**4.250**	**107.95**	**1.494**	**37.95**	**1.058**	**26.87**	**30.10**	**133.89**	**10.92**	**1.91**
C1234-098-4500-M	**1.234**	**31.34**	**0.098**	**2.49**	**4.500**	**114.30**	**1.574**	**39.98**	**1.111**	**28.21**	**30.10**	**133.89**	**10.29**	**1.80**
C1234-098-4750-M	**1.234**	**31.34**	**0.098**	**2.49**	**4.750**	**120.65**	**1.654**	**42.01**	**1.163**	**29.54**	**30.10**	**133.89**	**9.72**	**1.70**
C1234-098-5000-M	**1.234**	**31.34**	**0.098**	**2.49**	**5.000**	**127.00**	**1.734**	**44.05**	**1.216**	**30.88**	**30.10**	**133.89**	**9.22**	**1.61**
C1234-098-5250-M	**1.234**	**31.34**	**0.098**	**2.49**	**5.250**	**133.35**	**1.814**	**46.08**	**1.268**	**32.21**	**30.10**	**133.89**	**8.76**	**1.53**
C1234-098-5500-M	**1.234**	**31.34**	**0.098**	**2.49**	**5.500**	**139.70**	**1.894**	**48.11**	**1.321**	**33.55**	**30.10**	**133.89**	**8.35**	**1.46**
C1234-098-5750-M	**1.234**	**31.34**	**0.098**	**2.49**	**5.750**	**146.05**	**1.974**	**50.14**	**1.373**	**34.88**	**30.10**	**133.89**	**7.97**	**1.40**
C1234-098-6000-M	**1.234**	**31.34**	**0.098**	**2.49**	**6.000**	**152.40**	**2.054**	**52.18**	**1.426**	**36.22**	**30.10**	**133.89**	**7.63**	**1.33**
C1234-098-6250-M	**1.234**	**31.34**	**0.098**	**2.49**	**6.250**	**158.75**	**2.134**	**54.21**	**1.478**	**37.55**	**30.10**	**133.89**	**7.31**	**1.28**
C1234-098-6500-M	**1.234**	**31.34**	**0.098**	**2.49**	**6.500**	**165.10**	**2.214**	**56.24**	**1.531**	**38.89**	**30.10**	**133.89**	**7.02**	**1.23**
C1234-098-6750-M	**1.234**	**31.34**	**0.098**	**2.49**	**6.750**	**171.45**	**2.294**	**58.28**	**1.583**	**40.22**	**30.10**	**133.89**	**6.76**	**1.18**
C1234-098-7000-M	**1.234**	**31.34**	**0.098**	**2.49**	**7.000**	**177.80**	**2.374**	**60.31**	**1.636**	**41.55**	**30.10**	**133.89**	**6.51**	**1.14**
C1234-098-7500-M	**1.234**	**31.34**	**0.098**	**2.49**	**7.500**	**190.50**	**2.534**	**64.38**	**1.741**	**44.22**	**30.10**	**133.89**	**6.06**	**1.06**
C1234-098-8000-M	**1.234**	**31.34**	**0.098**	**2.49**	**8.000**	**203.20**	**2.695**	**68.44**	**1.846**	**46.89**	**30.10**	**133.89**	**5.67**	**0.99**
C1234-098-8500-M	**1.234**	**31.34**	**0.098**	**2.49**	**8.500**	**215.90**	**2.855**	**72.51**	**1.951**	**49.56**	**30.10**	**133.89**	**5.33**	**0.93**
C1234-098-9000-M	**1.234**	**31.34**	**0.098**	**2.49**	**9.000**	**228.60**	**3.015**	**76.57**	**2.056**	**52.23**	**30.10**	**133.89**	**5.03**	**0.88**
C1234-098-9500-M	**1.234**	**31.34**	**0.098**	**2.49**	**9.500**	**241.30**	**3.175**	**80.64**	**2.162**	**54.90**	**30.10**	**133.89**	**4.76**	**0.83**
C1234-105-2125-M	**1.234**	**31.34**	**0.105**	**2.67**	**2.125**	**53.98**	**0.870**	**22.10**	**0.681**	**17.30**	**36.47**	**162.24**	**29.07**	**5.09**
C1234-105-2250-M	**1.234**	**31.34**	**0.105**	**2.67**	**2.250**	**57.15**	**0.913**	**23.19**	**0.711**	**18.06**	**36.47**	**162.24**	**27.28**	**4.77**
C1234-105-2375-M	**1.234**	**31.34**	**0.105**	**2.67**	**2.375**	**60.33**	**0.956**	**24.29**	**0.741**	**18.83**	**36.47**	**162.24**	**25.71**	**4.50**
C1234-105-2500-M	**1.234**	**31.34**	**0.105**	**2.67**	**2.500**	**63.50**	**0.999**	**25.38**	**0.771**	**19.59**	**36.47**	**162.24**	**24.31**	**4.25**
C1234-105-2625-M	**1.234**	**31.34**	**0.105**	**2.67**	**2.625**	**66.68**	**1.042**	**26.48**	**0.801**	**20.35**	**36.47**	**162.24**	**23.05**	**4.03**
C1234-105-2750-M	**1.234**	**31.34**	**0.105**	**2.67**	**2.750**	**69.85**	**1.086**	**27.57**	**0.831**	**21.12**	**36.47**	**162.24**	**21.91**	**3.83**
C1234-105-2875-M	**1.234**	**31.34**	**0.105**	**2.67**	**2.875**	**73.03**	**1.129**	**28.67**	**0.861**	**21.88**	**36.47**	**162.24**	**20.89**	**3.65**
C1234-105-3000-M	**1.234**	**31.34**	**0.105**	**2.67**	**3.000**	**76.20**	**1.172**	**29.76**	**0.892**	**22.64**	**36.47**	**162.24**	**19.95**	**3.49**
C1234-105-3250-M	**1.234**	**31.34**	**0.105**	**2.67**	**3.250**	**82.55**	**1.258**	**31.95**	**0.952**	**24.17**	**36.47**	**162.24**	**18.31**	**3.20**
C1234-105-3500-M	**1.234**	**31.34**	**0.105**	**2.67**	**3.500**	**88.90**	**1.344**	**34.14**	**1.012**	**25.70**	**36.47**	**162.24**	**16.92**	**2.96**
C1234-105-3750-M	**1.234**	**31.34**	**0.105**	**2.67**	**3.750**	**95.25**	**1.430**	**36.33**	**1.072**	**27.23**	**36.47**	**162.24**	**15.72**	**2.75**
C1234-105-4000-M	**1.234**	**31.34**	**0.105**	**2.67**	**4.000**	**101.60**	**1.516**	**38.52**	**1.132**	**28.75**	**36.47**	**162.24**	**14.69**	**2.57**
C1234-105-4250-M	**1.234**	**31.34**	**0.105**	**2.67**	**4.250**	**107.95**	**1.603**	**40.71**	**1.192**	**30.28**	**36.47**	**162.24**	**13.78**	**2.41**

STAINLESS STEEL

Catalog #	Load Length (L_1)		Load (P) at L_1		Spring Rate (R)	
	in	mm	lb	N	lb/in	N/mm
C1225-177-1500-S	1.190	30.23	91.10	405.22	294.05	51.46
C1225-177-2000-S	1.555	39.50	91.10	405.22	204.75	35.83
C1225-177-2500-S	1.920	48.77	91.10	405.22	157.02	27.48
C1225-177-3000-S	2.285	58.04	91.10	405.22	127.37	22.29
C1225-177-3500-S	2.650	67.31	91.10	405.22	107.12	18.75
C1225-177-4000-S	3.014	76.56	91.10	405.22	92.38	16.17
C1225-177-4500-S	3.379	85.83	91.10	405.22	81.30	14.23
C1225-177-5000-S	3.744	95.10	91.10	405.22	72.55	12.70
C1225-192-1500-S	1.236	31.39	113.40	504.41	429.91	75.23
C1225-192-2000-S	1.618	41.10	113.40	504.41	296.88	51.95
C1225-192-2500-S	2.000	50.80	113.40	504.41	226.74	39.68
C1225-192-3000-S	2.382	60.50	113.40	504.41	183.43	32.10
C1225-192-3500-S	2.764	70.21	113.40	504.41	153.94	26.94
C1225-192-4000-S	3.145	79.88	113.40	504.41	132.70	23.22
C1225-192-4500-S	3.527	89.59	113.40	504.41	116.54	20.39
C1225-192-5000-S	3.909	99.29	113.40	504.41	103.96	18.19
C1225-207-2000-S	1.669	42.39	139.05	618.54	420.50	73.59
C1225-207-2500-S	2.065	52.45	139.05	618.54	319.71	55.95
C1225-207-3000-S	2.461	62.51	139.05	618.54	257.90	45.13
C1225-207-3500-S	2.857	72.57	139.05	618.54	216.08	37.81
C1225-207-4000-S	3.252	82.60	139.05	618.54	185.93	32.54
C1225-207-4500-S	3.648	92.66	139.05	618.54	163.19	28.56
C1225-207-5000-S	4.044	102.72	139.05	618.54	145.44	25.45
C1234-098-2250-S	**1.000**	**25.40**	**23.43**	**104.22**	**18.74**	**3.28**
C1234-098-2375-S	**1.049**	**26.64**	**23.43**	**104.22**	**17.67**	**3.09**
C1234-098-2500-S	**1.098**	**27.89**	**23.43**	**104.22**	**16.71**	**2.92**
C1234-098-2625-S	**1.147**	**29.13**	**23.43**	**104.22**	**15.85**	**2.77**
C1234-098-2750-S	**1.196**	**30.37**	**23.43**	**104.22**	**15.07**	**2.64**
C1234-098-2875-S	**1.245**	**31.61**	**23.43**	**104.22**	**14.37**	**2.51**
C1234-098-3000-S	**1.294**	**32.86**	**23.43**	**104.22**	**13.73**	**2.40**
C1234-098-3250-S	**1.391**	**35.34**	**23.43**	**104.22**	**12.61**	**2.21**
C1234-098-3500-S	**1.489**	**37.83**	**23.43**	**104.22**	**11.65**	**2.04**
C1234-098-3750-S	**1.587**	**40.31**	**23.43**	**104.22**	**10.83**	**1.90**
C1234-098-4000-S	**1.685**	**42.80**	**23.43**	**104.22**	**10.12**	**1.77**
C1234-098-4250-S	**1.783**	**45.28**	**23.43**	**104.22**	**9.50**	**1.66**
C1234-098-4500-S	**1.881**	**47.77**	**23.43**	**104.22**	**8.95**	**1.57**
C1234-098-4750-S	**1.979**	**50.26**	**23.43**	**104.22**	**8.45**	**1.48**
C1234-098-5000-S	**2.076**	**52.74**	**23.43**	**104.22**	**8.01**	**1.40**
C1234-098-5250-S	**2.174**	**55.23**	**23.43**	**104.22**	**7.62**	**1.33**
C1234-098-5500-S	**2.272**	**57.71**	**23.43**	**104.22**	**7.26**	**1.27**
C1234-098-5750-S	**2.370**	**60.20**	**23.43**	**104.22**	**6.93**	**1.21**
C1234-098-6000-S	**2.468**	**62.68**	**23.43**	**104.22**	**6.63**	**1.16**
C1234-098-6250-S	**2.566**	**65.17**	**23.43**	**104.22**	**6.36**	**1.11**
C1234-098-6500-S	**2.664**	**67.65**	**23.43**	**104.22**	**6.11**	**1.07**
C1234-098-6750-S	**2.761**	**70.14**	**23.43**	**104.22**	**5.87**	**1.03**
C1234-098-7000-S	**2.859**	**72.63**	**23.43**	**104.22**	**5.66**	**0.99**
C1234-098-7500-S	**3.055**	**77.60**	**23.43**	**104.22**	**5.27**	**0.92**
C1234-098-8000-S	**3.251**	**82.57**	**23.43**	**104.22**	**4.93**	**0.86**
C1234-098-8500-S	**3.446**	**87.54**	**23.43**	**104.22**	**4.64**	**0.81**
C1234-098-9000-S	**3.642**	**92.51**	**23.43**	**104.22**	**4.37**	**0.77**
C1234-098-9500-S	**3.838**	**97.48**	**23.43**	**104.22**	**4.14**	**0.72**
C1234-105-2125-S	**1.007**	**25.58**	**28.26**	**125.69**	**25.27**	**4.42**
C1234-105-2250-S	**1.059**	**26.90**	**28.26**	**125.69**	**23.73**	**4.15**
C1234-105-2375-S	**1.111**	**28.22**	**28.26**	**125.69**	**22.36**	**3.91**
C1234-105-2500-S	**1.163**	**29.54**	**28.26**	**125.69**	**21.14**	**3.70**
C1234-105-2625-S	**1.215**	**30.86**	**28.26**	**125.69**	**20.04**	**3.51**
C1234-105-2750-S	**1.267**	**32.18**	**28.26**	**125.69**	**19.06**	**3.33**
C1234-105-2875-S	**1.319**	**33.51**	**28.26**	**125.69**	**18.16**	**3.18**
C1234-105-3000-S	**1.371**	**34.83**	**28.26**	**125.69**	**17.35**	**3.04**
C1234-105-3250-S	**1.475**	**37.47**	**28.26**	**125.69**	**15.92**	**2.79**
C1234-105-3500-S	**1.579**	**40.11**	**28.26**	**125.69**	**14.71**	**2.57**
C1234-105-3750-S	**1.683**	**42.75**	**28.26**	**125.69**	**13.67**	**2.39**
C1234-105-4000-S	**1.787**	**45.40**	**28.26**	**125.69**	**12.77**	**2.23**
C1234-105-4250-S	**1.891**	**48.04**	**28.26**	**125.69**	**11.98**	**2.10**

Part Numbers with an "*" are squared and not ground. **Part Numbers in bold** represent the newly expanded Associated Spring RAYMOND compression spring offering.

MUSIC WIRE															STAINLESS STEEL					
Catalog #	Outside Diameter (OD)		Wire Diameter (d)		Free Length (L) Approx		Load Length (L_1)		Solid Height (Sh) Approx		Load (P) at L_1		Spring Rate (R)		Catalog #	Load Length (L_1)		Load (P) at L_1		Spring Rate (R)	
	in	mm	in	mm	in	mm	in	mm	in	mm	lb	N	lb/in	N/mm		in	mm	lb	N	lb/in	N/mm
C1234-105-4500-M	1.234	31.34	0.105	2.67	4.500	114.30	1.689	42.89	1.252	31.81	36.47	162.24	12.97	2.27	C1234-105-4500-S	1.995	50.68	28.26	125.69	11.28	1.97
C1234-105-4750-M	1.234	31.34	0.105	2.67	4.750	120.65	1.775	45.08	1.312	33.34	36.47	162.24	12.26	2.15	C1234-105-4750-S	2.099	53.33	28.26	125.69	10.66	1.87
C1234-105-5000-M	1.234	31.34	0.105	2.67	5.000	127.00	1.861	47.27	1.373	34.86	36.47	162.24	11.62	2.03	C1234-105-5000-S	2.203	55.97	28.26	125.69	10.10	1.77
C1234-105-5250-M	1.234	31.34	0.105	2.67	5.250	133.35	1.947	49.46	1.433	36.39	36.47	162.24	11.04	1.93	C1234-105-5250-S	2.308	58.61	28.26	125.69	9.60	1.68
C1234-105-5500-M	1.234	31.34	0.105	2.67	5.500	139.70	2.033	51.65	1.493	37.92	36.47	162.24	10.52	1.84	C1234-105-5500-S	2.412	61.25	28.26	125.69	9.15	1.60
C1234-105-5750-M	1.234	31.34	0.105	2.67	5.750	146.05	2.120	53.84	1.553	39.44	36.47	162.24	10.05	1.76	C1234-105-5750-S	2.516	63.90	28.26	125.69	8.74	1.53
C1234-105-6000-M	1.234	31.34	0.105	2.67	6.000	152.40	2.206	56.03	1.613	40.97	36.47	162.24	9.61	1.68	C1234-105-6000-S	2.620	66.54	28.26	125.69	8.36	1.46
C1234-105-6250-M	1.234	31.34	0.105	2.67	6.250	158.75	2.292	58.22	1.673	42.50	36.47	162.24	9.22	1.61	C1234-105-6250-S	2.724	69.18	28.26	125.69	8.01	1.40
C1234-105-6500-M	1.234	31.34	0.105	2.67	6.500	165.10	2.378	60.40	1.733	44.03	36.47	162.24	8.85	1.55	C1234-105-6500-S	2.828	71.82	28.26	125.69	7.70	1.35
C1234-105-6750-M	1.234	31.34	0.105	2.67	6.750	171.45	2.464	62.59	1.793	45.55	36.47	162.24	8.51	1.49	C1234-105-6750-S	2.932	74.47	28.26	125.69	7.40	1.30
C1234-105-7000-M	1.234	31.34	0.105	2.67	7.000	177.80	2.550	64.78	1.854	47.08	36.47	162.24	8.20	1.43	C1234-105-7000-S	3.036	77.11	28.26	125.69	7.13	1.25
C1234-105-7500-M	1.234	31.34	0.105	2.67	7.500	190.50	2.723	69.16	1.974	50.13	36.47	162.24	7.64	1.34	C1234-105-7500-S	3.244	82.40	28.26	125.69	6.64	1.16
C1234-105-8000-M	1.234	31.34	0.105	2.67	8.000	203.20	2.895	73.54	2.094	53.19	36.47	162.24	7.15	1.25	C1234-105-8000-S	3.452	87.68	28.26	125.69	6.21	1.09
C1234-105-8500-M	1.234	31.34	0.105	2.67	8.500	215.90	3.068	77.92	2.214	56.24	36.47	162.24	6.71	1.17	C1234-105-8500-S	3.660	92.97	28.26	125.69	5.84	1.02
C1234-105-9000-M	1.234	31.34	0.105	2.67	9.000	228.60	3.240	82.29	2.335	59.30	36.47	162.24	6.33	1.11	C1234-105-9000-S	3.868	98.25	28.26	125.69	5.51	0.96
C1234-105-9500-M	1.234	31.34	0.105	2.67	9.500	241.30	3.412	86.67	2.455	62.35	36.47	162.24	5.99	1.05	C1234-105-9500-S	4.076	103.54	28.26	125.69	5.21	0.91
C1234-112-2000-M	1.234	31.34	0.112	2.85	2.000	50.80	0.881	22.38	0.718	18.24	43.64	194.12	39.01	6.83	C1234-112-2000-S	1.008	25.61	33.64	149.65	33.92	5.94
C1234-112-2125-M	1.234	31.34	0.112	2.85	2.125	53.98	0.927	23.56	0.752	19.10	43.64	194.12	36.44	6.38	C1234-112-2125-S	1.063	27.01	33.64	149.65	31.69	5.55
C1234-112-2250-M	1.234	31.34	0.112	2.85	2.250	57.15	0.974	24.73	0.786	19.96	43.64	194.12	34.19	5.98	C1234-112-2250-S	1.119	28.41	33.64	149.65	29.73	5.20
C1234-112-2375-M	1.234	31.34	0.112	2.85	2.375	60.33	1.020	25.91	0.820	20.83	43.64	194.12	32.21	5.64	C1234-112-2375-S	1.174	29.81	33.64	149.65	28.01	4.90
C1234-112-2500-M	1.234	31.34	0.112	2.85	2.500	63.50	1.066	27.08	0.854	21.69	43.64	194.12	30.44	5.33	C1234-112-2500-S	1.229	31.21	33.64	149.65	26.47	4.63
C1234-112-2625-M	1.234	31.34	0.112	2.85	2.625	66.68	1.113	28.26	0.888	22.55	43.64	194.12	28.85	5.05	C1234-112-2625-S	1.284	32.62	33.64	149.65	25.09	4.39
C1234-112-2750-M	1.234	31.34	0.112	2.85	2.750	69.85	1.159	29.43	0.922	23.42	43.64	194.12	27.43	4.80	C1234-112-2750-S	1.339	34.02	33.64	149.65	23.85	4.17
C1234-112-2875-M	1.234	31.34	0.112	2.85	2.875	73.03	1.205	30.61	0.956	24.28	43.64	194.12	26.13	4.57	C1234-112-2875-S	1.394	35.42	33.64	149.65	22.72	3.98
C1234-112-3000-M	1.234	31.34	0.112	2.85	3.000	76.20	1.251	31.78	0.990	25.14	43.64	194.12	24.96	4.37	C1234-112-3000-S	1.450	36.82	33.64	149.65	21.70	3.80
C1234-112-3250-M	1.234	31.34	0.112	2.85	3.250	82.55	1.344	34.13	1.058	26.87	43.64	194.12	22.89	4.01	C1234-112-3250-S	1.560	39.63	33.64	149.65	19.91	3.48
C1234-112-3500-M	1.234	31.34	0.112	2.85	3.500	88.90	1.436	36.48	1.126	28.59	43.64	194.12	21.15	3.70	C1234-112-3500-S	1.670	42.43	33.64	149.65	18.39	3.22
C1234-112-3750-M	1.234	31.34	0.112	2.85	3.750	95.25	1.529	38.83	1.194	30.32	43.64	194.12	19.65	3.44	C1234-112-3750-S	1.781	45.23	33.64	149.65	17.09	2.99
C1234-112-4000-M	1.234	31.34	0.112	2.85	4.000	101.60	1.621	41.18	1.262	32.05	43.64	194.12	18.35	3.21	C1234-112-4000-S	1.891	48.04	33.64	149.65	15.95	2.79
C1234-112-4250-M	1.234	31.34	0.112	2.85	4.250	107.95	1.714	43.53	1.330	33.77	43.64	194.12	17.21	3.01	C1234-112-4250-S	2.002	50.84	33.64	149.65	14.96	2.62
C1234-112-4500-M	1.234	31.34	0.112	2.85	4.500	114.30	1.806	45.88	1.398	35.50	43.64	194.12	16.20	2.84	C1234-112-4500-S	2.112	53.64	33.64	149.65	14.09	2.47
C1234-112-4750-M	1.234	31.34	0.112	2.85	4.750	120.65	1.899	48.23	1.466	37.23	43.64	194.12	15.31	2.68	C1234-112-4750-S	2.222	56.45	33.64	149.65	13.31	2.33
C1234-112-5000-M	1.234	31.34	0.112	2.85	5.000	127.00	1.991	50.58	1.534	38.95	43.64	194.12	14.51	2.54	C1234-112-5000-S	2.333	59.25	33.64	149.65	12.61	2.21
C1234-112-5250-M	1.234	31.34	0.112	2.85	5.250	133.35	2.084	52.93	1.601	40.68	43.64	194.12	13.78	2.41	C1234-112-5250-S	2.443	62.06	33.64	149.65	11.99	2.10
C1234-112-5500-M	1.234	31.34	0.112	2.85	5.500	139.70	2.176	55.28	1.669	42.40	43.64	194.12	13.13	2.30	C1234-112-5500-S	2.554	64.86	33.64	149.65	11.42	2.00
C1234-112-5750-M	1.234	31.34	0.112	2.85	5.750	146.05	2.269	57.63	1.737	44.13	43.64	194.12	12.54	2.19	C1234-112-5750-S	2.664	67.66	33.64	149.65	10.90	1.91
C1234-112-6000-M	1.234	31.34	0.112	2.85	6.000	152.40	2.361	59.98	1.805	45.86	43.64	194.12	11.99	2.10	C1234-112-6000-S	2.774	70.47	33.64	149.65	10.43	1.83
C1234-112-6250-M	1.234	31.34	0.112	2.85	6.250	158.75	2.454	62.33	1.873	47.58	43.64	194.12	11.50	2.01	C1234-112-6250-S	2.885	73.27	33.64	149.65	10.00	1.75
C1234-112-6500-M	1.234	31.34	0.112	2.85	6.500	165.10	2.547	64.68	1.941	49.31	43.64	194.12	11.04	1.93	C1234-112-6500-S	2.995	76.07	33.64	149.65	9.60	1.68
C1234-112-6750-M	1.234	31.34	0.112	2.85	6.750	171.45	2.639	67.03	2.009	51.03	43.64	194.12	10.62	1.86	C1234-112-6750-S	3.105	78.88	33.64	149.65	9.23	1.62
C1234-112-7000-M	1.234	31.34	0.112	2.85	7.000	177.80	2.732	69.38	2.077	52.76	43.64	194.12	10.22	1.79	C1234-112-7000-S	3.216	81.68	33.64	149.65	8.89	1.56
C1234-112-7500-M	1.234	31.34	0.112	2.85	7.500	190.50	2.917	74.08	2.213	56.21	43.64	194.12	9.52	1.67	C1234-112-7500-S	3.437	87.29	33.64	149.65	8.28	1.45
C1234-112-8000-M*	1.234	31.34	0.112	2.85	8.000	203.20	3.172	80.57	2.436	61.88	43.64	194.12	9.04	1.58	C1234-112-8000-S*	3.720	94.49	33.64	149.65	7.86	1.38
C1234-112-8500-M*	1.234	31.34	0.112	2.85	8.500	215.90	3.357	85.27	2.572	65.33	43.64	194.12	8.49	1.49	C1234-112-8500-S*	3.941	100.09	33.64	149.65	7.38	1.29
C1234-112-9000-M*	1.234	31.34	0.112	2.85	9.000	228.60	3.542	89.97	2.708	68.78	43.64	194.12	8.00	1.40	C1234-112-9000-S*	4.161	105.70	33.64	149.65	6.95	1.22
C1234-112-9500-M*	1.234	31.34	0.112	2.85	9.500	241.30	3.727	94.67	2.844	72.24	43.64	194.12	7.56	1.32	C1234-112-9500-S*	4.382	111.31	33.64	149.65	6.57	1.15
C1234-125-1875-M	1.234	31.34	0.125	3.18	1.875	47.63	0.930	23.63	0.802	20.36	59.18	263.24	62.64	10.96	C1234-125-1875-S	1.045	26.55	45.19	201.02	54.47	9.53
C1234-125-2000-M	1.234	31.34	0.125	3.18	2.000	50.80	0.983	24.96	0.843	21.42	59.18	263.24	58.16	10.18	C1234-125-2000-S	1.106	28.10	45.19	201.02	50.58	8.85
C1234-125-2125-M	1.234	31.34	0.125	3.18	2.125	53.98	1.035	26.29	0.885	22.47	59.18	263.24	54.29	9.50	C1234-125-2125-S	1.168	29.66	45.19	201.02	47.21	8.26
C1234-125-2250-M	1.234	31.34	0.125	3.18	2.250	57.15	1.087	27.61	0.926	23.52	59.18	263.24	50.89	8.91	C1234-125-2250-S	1.229	31.21	45.19	201.02	44.26	7.74
C1234-125-2375-M	1.234	31.34	0.125	3.18	2.375	60.33	1.140	28.94	0.968	24.58	59.18	263.24	47.90	8.38	C1234-125-2375-S	1.290	32.77	45.19	201.02	41.65	7.29
C1234-125-2500-M	1.234	31.34	0.125	3.18	2.500	63.50	1.192	30.27	1.009	25.63	59.18	263.24	45.24	7.92	C1234-125-2500-S	1.351	34.32	45.19	201.02	39.34	6.88
C1234-125-2625-M	1.234	31.34	0.125	3.18	2.625	66.68	1.244	31.60	1.050	26.68	59.18	263.24	42.86	7.50	C1234-125-2625-S	1.412	35.87	45.19	201.02	37.27	6.52
C1234-125-2750-M	1.234	31.34	0.125	3.18	2.750	69.85	1.296	32.93	1.092	27.74	59.18	263.24	40.72	7.13	C1234-125-2750-S	1.474	37.43	45.19	201.02	35.40	6.20
C1234-125-2875-M	1.234	31.34	0.125	3.18	2.875	73.03	1.349	34.26	1.133	28.79	59.18	263.24	38.78	6.79	C1234-125-2875-S	1.535	38.98	45.19	201.02	33.72	5.90
C1234-125-3000-M	1.234	31.34	0.125	3.18	3.000	76.20	1.401	35.59	1.175	29.84	59.18	263.24	37.01	6.48	C1234-125-3000-S	1.596	40.54	45.19	201.02	32.19	5.63
C1234-125-3250-M	1.234	31.34	0.125	3.18	3.250	82.55	1.506	38.25	1.258	31.95	59.18	263.24	33.93	5.94	C1234-125-3250-S	1.718	43.64	45.19	201.02	29.50	5.16
C1234-125-3500-M	1.234	31.34	0.125	3.18	3.500	88.90	1.610	40.90	1.341	34.06	59.18	263.24	31.32	5.48	C1234-125-3500-S	1.841	46.75	45.19	201.02	27.23	4.77
C1234-125-3750-M	1.234	31.34	0.125	3.18	3.750	95.25	1.715	43.56	1.424	36.16	59.18	263.24	29.08	5.09	C1234-125-3750-S	1.963	49.86	45.19	201.02	25.29	4.43
C1234-125-4000-M	1.234	31.34	0.125	3.18	4.000	101.60	1.820	46.22	1.507	38.27	59.18	263.24	27.14	4.75	C1234-125-4000-S	2.085	52.97	45.19	201.02	23.60	4.13
C1234-125-4250-M	1.234	31.34	0.125	3.18	4.250	107.95	1.924	48.88	1.590	40.38	59.18	263.24	25.45	4.45	C1234-125-4250-S	2.208	56.07	45.19	201.02	22.13	3.87
C1234-125-4500-M	1.234	31.34	0.125	3.18	4.500	114.30	2.029	51.54	1.673	42.48	59.18	263.24	23.95	4.19	C1234-125-4500-S	2.330	59.18	45.19	201.02	20.83	3.64
C1234-125-4750-M	1.234	31.34	0.125	3.18	4.750	120.65	2.134	54.19	1.756	44.59	59.18	263.24	22.62	3.96	C1234-125-4750-S	2.452	62.29	45.19	201.02	19.67	3.44
C1234-125-5000-M	1.234	31.34	0.125	3.18	5.000	127.00	2.238	56.85	1.838	46.70	59.18	263.24	21.43	3.75	C1234-125-5000-S	2.575	65.40	45.19	201.02	18.63	3.26

FOR INFORMATION ON ALTERNATIVE FINISHES, SEE PAGE 311

Part Numbers with an "*" are squared and not ground. **Part Numbers in bold** represent the newly expanded Associated Spring RAYMOND compression spring offering.

MUSIC WIRE

Catalog #	Outside Diameter (OD)		Wire Diameter (d)		Free Length (L) Approx		Load Length (L_1)		Solid Height (Sh) Approx		Load (P) at L_1		Spring Rate (R)	
	in	mm	in	mm	in	mm	in	mm	in	mm	lb	N	lb/in	N/mm
C1234-125-5250-M	1.234	31.34	0.125	3.18	5.250	133.35	2.343	59.51	1.921	48.80	59.18	263.24	20.36	3.56
C1234-125-5500-M	1.234	31.34	0.125	3.18	5.500	139.70	2.448	62.17	2.004	50.91	59.18	263.24	19.39	3.39
C1234-125-5750-M	1.234	31.34	0.125	3.18	5.750	146.05	2.552	64.83	2.087	53.02	59.18	263.24	18.51	3.24
C1234-125-6000-M	1.234	31.34	0.125	3.18	6.000	152.40	2.657	67.49	2.170	55.13	59.18	263.24	17.70	3.10
C1234-125-6250-M	1.234	31.34	0.125	3.18	6.250	158.75	2.762	70.14	2.253	57.23	59.18	263.24	16.96	2.97
C1234-125-6500-M	1.234	31.34	0.125	3.18	6.500	165.10	2.866	72.80	2.336	59.34	59.18	263.24	16.29	2.85
C1234-125-6750-M	1.234	31.34	0.125	3.18	6.750	171.45	2.971	75.46	2.419	61.45	59.18	263.24	15.66	2.74
C1234-125-7000-M*	1.234	31.34	0.125	3.18	7.000	177.80	3.148	79.96	2.592	65.83	59.18	263.24	15.36	2.69
C1234-125-7500-M*	1.234	31.34	0.125	3.18	7.500	190.50	3.357	85.28	2.758	70.05	59.18	263.24	14.29	2.50
C1234-125-8000-M*	1.234	31.34	0.125	3.18	8.000	203.20	3.567	90.60	2.924	74.26	59.18	263.24	13.35	2.34
C1234-125-8500-M*	1.234	31.34	0.125	3.18	8.500	215.90	3.776	95.91	3.090	78.47	59.18	263.24	12.53	2.19
C1234-125-9000-M*	1.234	31.34	0.125	3.18	9.000	228.60	3.985	101.23	3.255	82.69	59.18	263.24	11.80	2.07
C1234-125-9500-M*	1.234	31.34	0.125	3.18	9.500	241.30	4.195	106.54	3.421	86.90	59.18	263.24	11.16	1.95
C1234-135-1875-M	1.234	31.34	0.135	3.43	1.875	47.63	1.003	25.47	0.891	22.63	73.22	325.70	83.93	14.69
C1234-135-2000-M	1.234	31.34	0.135	3.43	2.000	50.80	1.060	26.91	0.938	23.83	73.22	325.70	77.86	13.63
C1234-135-2125-M	1.234	31.34	0.135	3.43	2.125	53.98	1.117	28.36	0.986	25.04	73.22	325.70	72.62	12.71
C1234-135-2250-M	1.234	31.34	0.135	3.43	2.250	57.15	1.174	29.81	1.033	26.24	73.22	325.70	68.03	11.91
C1234-135-2375-M	1.234	31.34	0.135	3.43	2.375	60.33	1.231	31.26	1.080	27.44	73.22	325.70	63.99	11.20
C1234-135-2500-M	1.234	31.34	0.135	3.43	2.500	63.50	1.288	32.71	1.128	28.64	73.22	325.70	60.41	10.57
C1234-135-2625-M	1.234	31.34	0.135	3.43	2.625	66.68	1.345	34.16	1.175	29.84	73.22	325.70	57.20	10.01
C1234-135-2750-M	1.234	31.34	0.135	3.43	2.750	69.85	1.402	35.61	1.222	31.05	73.22	325.70	54.32	9.51
C1234-135-2875-M	1.234	31.34	0.135	3.43	2.875	73.03	1.459	37.06	1.270	32.25	73.22	325.70	51.71	9.05
C1234-135-3000-M	1.234	31.34	0.135	3.43	3.000	76.20	1.516	38.51	1.317	33.45	73.22	325.70	49.34	8.63
C1234-135-3250-M	1.234	31.34	0.135	3.43	3.250	82.55	1.630	41.41	1.412	35.85	73.22	325.70	45.20	7.91
C1234-135-3500-M	1.234	31.34	0.135	3.43	3.500	88.90	1.744	44.30	1.506	38.26	73.22	325.70	41.70	7.30
C1234-135-3750-M	1.234	31.34	0.135	3.43	3.750	95.25	1.858	47.20	1.601	40.66	73.22	325.70	38.71	6.77
C1234-135-4000-M	1.234	31.34	0.135	3.43	4.000	101.60	1.972	50.10	1.695	43.06	73.22	325.70	36.11	6.32
C1234-135-4250-M	1.234	31.34	0.135	3.43	4.250	107.95	2.087	53.00	1.790	45.47	73.22	325.70	33.85	5.92
C1234-135-4500-M	1.234	31.34	0.135	3.43	4.500	114.30	2.201	55.90	1.885	47.87	73.22	325.70	31.84	5.57
C1234-135-4750-M	1.234	31.34	0.135	3.43	4.750	120.65	2.315	58.80	1.979	50.27	73.22	325.70	30.07	5.26
C1234-135-5000-M	1.234	31.34	0.135	3.43	5.000	127.00	2.429	61.69	2.074	52.68	73.22	325.70	28.48	4.98
C1234-135-5250-M	1.234	31.34	0.135	3.43	5.250	133.35	2.543	64.59	2.169	55.08	73.22	325.70	27.05	4.73
C1234-135-5500-M	1.234	31.34	0.135	3.43	5.500	139.70	2.657	67.49	2.263	57.49	73.22	325.70	25.76	4.51
C1234-135-5750-M	1.234	31.34	0.135	3.43	5.750	146.05	2.771	70.39	2.358	59.89	73.22	325.70	24.58	4.30
C1234-135-6000-M	1.234	31.34	0.135	3.43	6.000	152.40	2.885	73.29	2.452	62.29	73.22	325.70	23.51	4.11
C1234-135-6250-M	1.234	31.34	0.135	3.43	6.250	158.75	2.999	76.19	2.547	64.70	73.22	325.70	22.53	3.94
C1234-135-6500-M	1.234	31.34	0.135	3.43	6.500	165.10	3.114	79.08	2.642	67.10	73.22	325.70	21.62	3.78
C1234-135-6750-M	1.234	31.34	0.135	3.43	6.750	171.45	3.228	81.98	2.736	69.50	73.22	325.70	20.79	3.64
C1234-135-7000-M	1.234	31.34	0.135	3.43	7.000	177.80	3.342	84.88	2.831	71.91	73.22	325.70	20.02	3.50
C1234-135-7500-M	1.234	31.34	0.135	3.43	7.500	190.50	3.570	90.68	3.020	76.71	73.22	325.70	18.63	3.26
C1234-135-8000-M	1.234	31.34	0.135	3.43	8.000	203.20	3.798	96.47	3.210	81.52	73.22	325.70	17.43	3.05
C1234-135-8500-M*	1.234	31.34	0.135	3.43	8.500	215.90	4.100	104.13	3.489	88.63	73.22	325.70	16.64	2.91
C1234-135-9000-M*	1.234	31.34	0.135	3.43	9.000	228.60	4.328	109.93	3.679	93.44	73.22	325.70	15.67	2.74
C1234-135-9500-M*	1.234	31.34	0.135	3.43	9.500	241.30	4.556	115.73	3.868	98.25	73.22	325.70	14.81	2.59
C1234-148-1750-M	1.234	31.34	0.148	3.76	1.750	44.45	1.031	26.18	0.949	24.10	94.36	419.72	131.16	22.95
C1234-148-1875-M	1.234	31.34	0.148	3.76	1.875	47.63	1.094	27.78	1.004	25.49	94.36	419.72	120.77	21.14
C1234-148-2000-M	1.234	31.34	0.148	3.76	2.000	50.80	1.157	29.38	1.059	26.89	94.36	419.72	111.91	19.58
C1234-148-2125-M	1.234	31.34	0.148	3.76	2.125	53.98	1.220	30.99	1.113	28.28	94.36	419.72	104.27	18.25
C1234-148-2250-M	1.234	31.34	0.148	3.76	2.250	57.15	1.283	32.59	1.168	29.67	94.36	419.72	97.60	17.08
C1234-148-2375-M	1.234	31.34	0.148	3.76	2.375	60.33	1.346	34.20	1.223	31.07	94.36	419.72	91.73	16.05
C1234-148-2500-M	1.234	31.34	0.148	3.76	2.500	63.50	1.409	35.80	1.278	32.46	94.36	419.72	86.53	15.14
C1234-148-2625-M	1.234	31.34	0.148	3.76	2.625	66.68	1.473	37.41	1.333	33.85	94.36	419.72	81.88	14.33
C1234-148-2750-M	1.234	31.34	0.148	3.76	2.750	69.85	1.536	39.01	1.388	35.25	94.36	419.72	77.71	13.60
C1234-148-2875-M	1.234	31.34	0.148	3.76	2.875	73.03	1.599	40.61	1.442	36.64	94.36	419.72	73.94	12.94
C1234-148-3000-M	1.234	31.34	0.148	3.76	3.000	76.20	1.662	42.22	1.497	38.03	94.36	419.72	70.53	12.34
C1234-148-3250-M	1.234	31.34	0.148	3.76	3.250	82.55	1.788	45.43	1.607	40.82	94.36	419.72	64.56	11.30
C1234-148-3500-M	1.234	31.34	0.148	3.76	3.500	88.90	1.915	48.63	1.717	43.60	94.36	419.72	59.52	10.42
C1234-148-3750-M	1.234	31.34	0.148	3.76	3.750	95.25	2.041	51.84	1.826	46.39	94.36	419.72	55.21	9.66
C1234-148-4000-M	1.234	31.34	0.148	3.76	4.000	101.60	2.167	55.05	1.936	49.18	94.36	419.72	51.49	9.01
C1234-148-4250-M	1.234	31.34	0.148	3.76	4.250	107.95	2.294	58.26	2.046	51.96	94.36	419.72	48.23	8.44
C1234-148-4500-M	1.234	31.34	0.148	3.76	4.500	114.30	2.420	61.47	2.155	54.75	94.36	419.72	45.36	7.94
C1234-148-4750-M	1.234	31.34	0.148	3.76	4.750	120.65	2.546	64.67	2.265	57.54	94.36	419.72	42.82	7.49
C1234-148-5000-M	1.234	31.34	0.148	3.76	5.000	127.00	2.673	67.88	2.375	60.32	94.36	419.72	40.54	7.09
C1234-148-5250-M	1.234	31.34	0.148	3.76	5.250	133.35	2.799	71.09	2.485	63.11	94.36	419.72	38.49	6.74

STAINLESS STEEL

Catalog #	Load Length (L_1)		Load (P) at L_1		Spring Rate (R)	
	in	mm	lb	N	lb/in	N/mm
C1234-125-5250-S	2.697	68.51	45.19	201.02	17.70	3.10
C1234-125-5500-S	2.819	71.61	45.19	201.02	16.86	2.95
C1234-125-5750-S	2.942	74.72	45.19	201.02	16.09	2.82
C1234-125-6000-S	3.064	77.83	45.19	201.02	15.39	2.69
C1234-125-6250-S	3.186	80.94	45.19	201.02	14.75	2.58
C1234-125-6500-S	3.309	84.04	45.19	201.02	14.16	2.48
C1234-125-6750-S	3.431	87.15	45.19	201.02	13.62	2.38
C1234-125-7000-S*	3.617	91.88	45.19	201.02	13.36	2.34
C1234-125-7500-S*	3.862	98.10	45.19	201.02	12.42	2.17
C1234-125-8000-S*	4.107	104.31	45.19	201.02	11.61	2.03
C1234-125-8500-S*	4.351	110.53	45.19	201.02	10.89	1.91
C1234-125-9000-S*	4.596	116.74	45.19	201.02	10.26	1.80
C1234-125-9500-S*	4.841	122.96	45.19	201.02	9.70	1.70
C1234-135-1875-S	1.115	28.31	55.50	246.86	72.98	12.77
C1234-135-2000-S	1.180	29.98	55.50	246.86	67.71	11.85
C1234-135-2125-S	1.246	31.65	55.50	246.86	63.14	11.05
C1234-135-2250-S	1.312	33.32	55.50	246.86	59.16	10.35
C1234-135-2375-S	1.378	34.99	55.50	246.86	55.65	9.74
C1234-135-2500-S	1.443	36.66	55.50	246.86	52.53	9.19
C1234-135-2625-S	1.509	38.33	55.50	246.86	49.74	8.70
C1234-135-2750-S	1.575	40.00	55.50	246.86	47.23	8.27
C1234-135-2875-S	1.641	41.68	55.50	246.86	44.96	7.87
C1234-135-3000-S	1.707	43.35	55.50	246.86	42.91	7.51
C1234-135-3250-S	1.838	46.69	55.50	246.86	39.31	6.88
C1234-135-3500-S	1.970	50.03	55.50	246.86	36.26	6.35
C1234-135-3750-S	2.101	53.37	55.50	246.86	33.66	5.89
C1234-135-4000-S	2.233	56.71	55.50	246.86	31.40	5.50
C1234-135-4250-S	2.364	60.05	55.50	246.86	29.43	5.15
C1234-135-4500-S	2.496	63.39	55.50	246.86	27.69	4.85
C1234-135-4750-S	2.627	66.74	55.50	246.86	26.15	4.58
C1234-135-5000-S	2.759	70.08	55.50	246.86	24.76	4.33
C1234-135-5250-S	2.890	73.42	55.50	246.86	23.52	4.12
C1234-135-5500-S	3.022	76.76	55.50	246.86	22.40	3.92
C1234-135-5750-S	3.154	80.10	55.50	246.86	21.37	3.74
C1234-135-6000-S	3.285	83.44	55.50	246.86	20.44	3.58
C1234-135-6250-S	3.417	86.78	55.50	246.86	19.59	3.43
C1234-135-6500-S	3.548	90.13	55.50	246.86	18.80	3.29
C1234-135-6750-S	3.680	93.47	55.50	246.86	18.08	3.16
C1234-135-7000-S	3.811	96.81	55.50	246.86	17.40	3.05
C1234-135-7500-S	4.074	103.49	55.50	246.86	16.20	2.84
C1234-135-8000-S	4.338	110.17	55.50	246.86	15.15	2.65
C1234-135-8500-S*	4.665	118.48	55.50	246.86	14.47	2.53
C1234-135-9000-S*	4.928	125.16	55.50	246.86	13.63	2.38
C1234-135-9500-S*	5.191	131.85	55.50	246.86	12.88	2.25
C1234-148-1750-S	1.129	28.68	70.81	314.99	114.05	19.96
C1234-148-1875-S	1.201	30.50	70.81	314.99	105.02	18.38
C1234-148-2000-S	1.272	32.32	70.81	314.99	97.32	17.03
C1234-148-2125-S	1.344	34.14	70.81	314.99	90.67	15.87
C1234-148-2250-S	1.416	35.96	70.81	314.99	84.87	14.85
C1234-148-2375-S	1.487	37.78	70.81	314.99	79.76	13.96
C1234-148-2500-S	1.559	39.59	70.81	314.99	75.24	13.17
C1234-148-2625-S	1.630	41.41	70.81	314.99	71.20	12.46
C1234-148-2750-S	1.702	43.23	70.81	314.99	67.57	11.83
C1234-148-2875-S	1.774	45.05	70.81	314.99	64.30	11.25
C1234-148-3000-S	1.845	46.87	70.81	314.99	61.33	10.73
C1234-148-3250-S	1.989	50.51	70.81	314.99	56.14	9.82
C1234-148-3500-S	2.132	54.15	70.81	314.99	51.76	9.06
C1234-148-3750-S	2.275	57.79	70.81	314.99	48.01	8.40
C1234-148-4000-S	2.418	61.42	70.81	314.99	44.77	7.83
C1234-148-4250-S	2.562	65.06	70.81	314.99	41.94	7.34
C1234-148-4500-S	2.705	68.70	70.81	314.99	39.45	6.90
C1234-148-4750-S	2.848	72.34	70.81	314.99	37.23	6.52
C1234-148-5000-S	2.991	75.98	70.81	314.99	35.25	6.17
C1234-148-5250-S	3.134	79.62	70.81	314.99	33.47	5.86

Part Numbers with an "*" are squared and not ground. **Part Numbers in bold** represent the newly expanded Associated Spring RAYMOND compression spring offering.

MUSIC WIRE														
Catalog #	Outside Diameter (OD)		Wire Diameter (d)		Free Length (L) Approx		Load Length (L_1)		Solid Height (Sh) Approx		Load (P) at L_1		Spring Rate (R)	
	in	mm	in	mm	in	mm	in	mm	in	mm	lb	N	lb/in	N/mm
C1234-148-5500-M	1.234	31.34	0.148	3.76	5.500	139.70	2.925	74.30	2.594	65.90	94.36	419.72	36.65	6.41
C1234-148-5750-M	1.234	31.34	0.148	3.76	5.750	146.05	3.051	77.51	2.704	68.68	94.36	419.72	34.97	6.12
C1234-148-6000-M	1.234	31.34	0.148	3.76	6.000	152.40	3.178	80.71	2.814	71.47	94.36	419.72	33.43	5.85
C1234-148-6250-M	1.234	31.34	0.148	3.76	6.250	158.75	3.304	83.92	2.923	74.25	94.36	419.72	32.03	5.61
C1234-148-6500-M	1.234	31.34	0.148	3.76	6.500	165.10	3.430	87.13	3.033	77.04	94.36	419.72	30.74	5.38
C1234-148-6750-M	1.234	31.34	0.148	3.76	6.750	171.45	3.557	90.34	3.143	79.83	94.36	419.72	29.55	5.17
C1234-148-7000-M	1.234	31.34	0.148	3.76	7.000	177.80	3.683	93.55	3.252	82.61	94.36	419.72	28.45	4.98
C1234-148-7500-M	1.234	31.34	0.148	3.76	7.500	190.50	3.936	99.96	3.472	88.19	94.36	419.72	26.47	4.63
C1234-148-8000-M	1.234	31.34	0.148	3.76	8.000	203.20	4.188	106.38	3.691	93.76	94.36	419.72	24.75	4.33
C1234-148-8500-M	1.234	31.34	0.148	3.76	8.500	215.90	4.441	112.80	3.911	99.33	94.36	419.72	23.25	4.07
C1234-148-9000-M	1.234	31.34	0.148	3.76	9.000	228.60	4.693	119.21	4.130	104.90	94.36	419.72	21.91	3.83
C1234-148-9500-M	1.234	31.34	0.148	3.76	9.500	241.30	4.946	125.63	4.349	110.48	94.36	419.72	20.72	3.63
C1234-162-1750-M	1.234	31.34	0.162	4.12	1.750	44.45	1.117	28.37	1.056	26.81	120.96	538.07	191.10	33.44
C1234-162-1875-M	1.234	31.34	0.162	4.12	1.875	47.63	1.187	30.14	1.118	28.40	120.96	538.07	175.70	30.75
C1234-162-2000-M	1.234	31.34	0.162	4.12	2.000	50.80	1.256	31.90	1.181	30.00	120.96	538.07	162.59	28.45
C1234-162-2125-M	1.234	31.34	0.162	4.12	2.125	53.98	1.326	33.67	1.244	31.59	120.96	538.07	151.31	26.48
C1234-162-2250-M	1.234	31.34	0.162	4.12	2.250	57.15	1.395	35.43	1.306	33.18	120.96	538.07	141.49	24.76
C1234-162-2375-M	1.234	31.34	0.162	4.12	2.375	60.33	1.465	37.20	1.369	34.78	120.96	538.07	132.87	23.25
C1234-162-2500-M	1.234	31.34	0.162	4.12	2.500	63.50	1.534	38.97	1.432	36.37	120.96	538.07	125.23	21.92
C1234-162-2625-M	1.234	31.34	0.162	4.12	2.625	66.68	1.604	40.73	1.495	37.96	120.96	538.07	118.43	20.73
C1234-162-2750-M	1.234	31.34	0.162	4.12	2.750	69.85	1.673	42.50	1.557	39.55	120.96	538.07	112.33	19.66
C1234-162-2875-M	1.234	31.34	0.162	4.12	2.875	73.03	1.743	44.26	1.620	41.15	120.96	538.07	106.82	18.69
C1234-162-3000-M	1.234	31.34	0.162	4.12	3.000	76.20	1.812	46.03	1.683	42.74	120.96	538.07	101.83	17.82
C1234-162-3250-M	1.234	31.34	0.162	4.12	3.250	82.55	1.951	49.56	1.808	45.92	120.96	538.07	93.13	16.30
C1234-162-3500-M	1.234	31.34	0.162	4.12	3.500	88.90	2.090	53.09	1.933	49.11	120.96	538.07	85.80	15.02
C1234-162-3750-M	1.234	31.34	0.162	4.12	3.750	95.25	2.229	56.62	2.059	52.30	120.96	538.07	79.54	13.92
C1234-162-4000-M	1.234	31.34	0.162	4.12	4.000	101.60	2.368	60.15	2.184	55.48	120.96	538.07	74.13	12.97
C1234-162-4250-M	1.234	31.34	0.162	4.12	4.250	107.95	2.507	63.68	2.310	58.67	120.96	538.07	69.41	12.15
C1234-162-4500-M	1.234	31.34	0.162	4.12	4.500	114.30	2.646	67.22	2.435	61.85	120.96	538.07	65.26	11.42
C1234-162-4750-M	1.234	31.34	0.162	4.12	4.750	120.65	2.785	70.75	2.561	65.04	120.96	538.07	61.57	10.77
C1234-162-5000-M	1.234	31.34	0.162	4.12	5.000	127.00	2.924	74.28	2.686	68.22	120.96	538.07	58.28	10.20
C1234-162-5250-M	1.234	31.34	0.162	4.12	5.250	133.35	3.063	77.81	2.811	71.41	120.96	538.07	55.32	9.68
C1234-162-5500-M	1.234	31.34	0.162	4.12	5.500	139.70	3.202	81.34	2.937	74.59	120.96	538.07	52.65	9.21
C1234-162-5750-M	1.234	31.34	0.162	4.12	5.750	146.05	3.341	84.87	3.062	77.78	120.96	538.07	50.22	8.79
C1234-162-6000-M	1.234	31.34	0.162	4.12	6.000	152.40	3.480	88.40	3.188	80.97	120.96	538.07	48.01	8.40
C1234-162-6250-M	1.234	31.34	0.162	4.12	6.250	158.75	3.619	91.93	3.313	84.15	120.96	538.07	45.99	8.05
C1234-162-6500-M	1.234	31.34	0.162	4.12	6.500	165.10	3.759	95.47	3.438	87.34	120.96	538.07	44.12	7.72
C1234-162-6750-M	1.234	31.34	0.162	4.12	6.750	171.45	3.898	99.00	3.564	90.52	120.96	538.07	42.41	7.42
C1234-162-7000-M	1.234	31.34	0.162	4.12	7.000	177.80	4.037	102.53	3.689	93.71	120.96	538.07	40.82	7.14
C1234-162-7500-M	1.234	31.34	0.162	4.12	7.500	190.50	4.315	109.59	3.940	100.08	120.96	538.07	37.98	6.65
C1234-162-8000-M	1.234	31.34	0.162	4.12	8.000	203.20	4.593	116.65	4.191	106.45	120.96	538.07	35.50	6.21
C1234-162-8500-M	1.234	31.34	0.162	4.12	8.500	215.90	4.871	123.72	4.442	112.82	120.96	538.07	33.33	5.83
C1234-162-9000-M	1.234	31.34	0.162	4.12	9.000	228.60	5.149	130.78	4.693	119.19	120.96	538.07	31.41	5.50
C1234-162-9500-M	1.234	31.34	0.162	4.12	9.500	241.30	5.427	137.84	4.943	125.56	120.96	538.07	29.70	5.20
C1234-177-1750-M	1.234	31.34	0.177	4.50	1.750	44.45	1.202	30.54	1.161	29.48	154.14	685.64	281.38	49.24
C1234-177-1875-M	1.234	31.34	0.177	4.50	1.875	47.63	1.278	32.47	1.231	31.28	154.14	685.64	258.26	45.19
C1234-177-2000-M	1.234	31.34	0.177	4.50	2.000	50.80	1.354	34.39	1.302	33.07	154.14	685.64	238.64	41.76
C1234-177-2125-M	1.234	31.34	0.177	4.50	2.125	53.98	1.430	36.32	1.373	34.87	154.14	685.64	221.80	38.82
C1234-177-2250-M	1.234	31.34	0.177	4.50	2.250	57.15	1.506	38.25	1.443	36.66	154.14	685.64	207.18	36.26
C1234-177-2375-M	1.234	31.34	0.177	4.50	2.375	60.33	1.582	40.18	1.514	38.46	154.14	685.64	194.36	34.01
C1234-177-2500-M	1.234	31.34	0.177	4.50	2.500	63.50	1.658	42.11	1.585	40.25	154.14	685.64	183.04	32.03
C1234-177-2625-M	1.234	31.34	0.177	4.50	2.625	66.68	1.734	44.04	1.655	42.05	154.14	685.64	172.97	30.27
C1234-177-2750-M	1.234	31.34	0.177	4.50	2.750	69.85	1.810	45.97	1.726	43.84	154.14	685.64	163.94	28.69
C1234-177-2875-M	1.234	31.34	0.177	4.50	2.875	73.03	1.886	47.90	1.797	45.64	154.14	685.64	155.82	27.27
C1234-177-3000-M	1.234	31.34	0.177	4.50	3.000	76.20	1.962	49.83	1.867	47.43	154.14	685.64	148.45	25.98
C1234-177-3250-M	1.234	31.34	0.177	4.50	3.250	82.55	2.114	53.69	2.009	51.02	154.14	685.64	135.64	23.74
C1234-177-3500-M	1.234	31.34	0.177	4.50	3.500	88.90	2.266	57.54	2.150	54.61	154.14	685.64	124.86	21.85
C1234-177-3750-M	1.234	31.34	0.177	4.50	3.750	95.25	2.417	61.40	2.291	58.20	154.14	685.64	115.67	20.24
C1234-177-4000-M	1.234	31.34	0.177	4.50	4.000	101.60	2.569	65.26	2.433	61.79	154.14	685.64	107.74	18.85
C1234-177-4250-M	1.234	31.34	0.177	4.50	4.250	107.95	2.721	69.12	2.574	65.38	154.14	685.64	100.82	17.64
C1234-177-4500-M	1.234	31.34	0.177	4.50	4.500	114.30	2.873	72.98	2.715	68.97	154.14	685.64	94.74	16.58
C1234-177-4750-M	1.234	31.34	0.177	4.50	4.750	120.65	3.025	76.84	2.857	72.56	154.14	685.64	89.36	15.64
C1234-177-5000-M	1.234	31.34	0.177	4.50	5.000	127.00	3.177	80.69	2.998	76.15	154.14	685.64	84.55	14.80
C1234-177-5250-M	1.234	31.34	0.177	4.50	5.250	133.35	3.329	84.55	3.139	79.74	154.14	685.64	80.23	14.04

STAINLESS STEEL						
Catalog #	Load Length (L_1)		Load (P) at L_1		Spring Rate (R)	
	in	mm	lb	N	lb/in	N/mm
C1234-148-5500-S	3.278	83.25	70.81	314.99	31.87	5.58
C1234-148-5750-S	3.421	86.89	70.81	314.99	30.41	5.32
C1234-148-6000-S	3.564	90.53	70.81	314.99	29.07	5.09
C1234-148-6250-S	3.707	94.17	70.81	314.99	27.85	4.87
C1234-148-6500-S	3.851	97.81	70.81	314.99	26.73	4.68
C1234-148-6750-S	3.994	101.45	70.81	314.99	25.69	4.50
C1234-148-7000-S	4.137	105.08	70.81	314.99	24.74	4.33
C1234-148-7500-S	4.424	112.36	70.81	314.99	23.02	4.03
C1234-148-8000-S	4.710	119.64	70.81	314.99	21.53	3.77
C1234-148-8500-S	4.997	126.91	70.81	314.99	20.21	3.54
C1234-148-9000-S	5.283	134.19	70.81	314.99	19.05	3.33
C1234-148-9500-S	5.570	141.47	70.81	314.99	18.02	3.15
C1234-162-1750-S	1.210	30.72	89.81	399.50	166.17	29.08
C1234-162-1875-S	1.287	32.69	89.81	399.50	152.78	26.74
C1234-162-2000-S	1.365	34.67	89.81	399.50	141.39	24.74
C1234-162-2125-S	1.442	36.64	89.81	399.50	131.57	23.03
C1234-162-2250-S	1.520	38.61	89.81	399.50	123.03	21.53
C1234-162-2375-S	1.598	40.58	89.81	399.50	115.54	20.22
C1234-162-2500-S	1.675	42.55	89.81	399.50	108.90	19.06
C1234-162-2625-S	1.753	44.52	89.81	399.50	102.98	18.02
C1234-162-2750-S	1.831	46.50	89.81	399.50	97.68	17.09
C1234-162-2875-S	1.908	48.47	89.81	399.50	92.89	16.26
C1234-162-3000-S	1.986	50.44	89.81	399.50	88.55	15.50
C1234-162-3250-S	2.141	54.38	89.81	399.50	80.99	14.17
C1234-162-3500-S	2.296	58.32	89.81	399.50	74.61	13.06
C1234-162-3750-S	2.452	62.27	89.81	399.50	69.17	12.10
C1234-162-4000-S	2.607	66.21	89.81	399.50	64.46	11.28
C1234-162-4250-S	2.762	70.15	89.81	399.50	60.36	10.56
C1234-162-4500-S	2.917	74.10	89.81	399.50	56.74	9.93
C1234-162-4750-S	3.072	78.04	89.81	399.50	53.54	9.37
C1234-162-5000-S	3.228	81.98	89.81	399.50	50.68	8.87
C1234-162-5250-S	3.383	85.93	89.81	399.50	48.10	8.42
C1234-162-5500-S	3.538	89.87	89.81	399.50	45.78	8.01
C1234-162-5750-S	3.693	93.81	89.81	399.50	43.67	7.64
C1234-162-6000-S	3.849	97.76	89.81	399.50	41.75	7.31
C1234-162-6250-S	4.004	101.70	89.81	399.50	39.99	7.00
C1234-162-6500-S	4.159	105.64	89.81	399.50	38.37	6.71
C1234-162-6750-S	4.314	109.59	89.81	399.50	36.88	6.45
C1234-162-7000-S	4.470	113.53	89.81	399.50	35.50	6.21
C1234-162-7500-S	4.780	121.42	89.81	399.50	33.02	5.78
C1234-162-8000-S	5.091	129.30	89.81	399.50	30.87	5.40
C1234-162-8500-S	5.401	137.19	89.81	399.50	28.98	5.07
C1234-162-9000-S	5.712	145.08	89.81	399.50	27.31	4.78
C1234-162-9500-S	6.022	152.96	89.81	399.50	25.82	4.52
C1234-177-1750-S	1.288	32.71	113.13	503.22	244.68	42.82
C1234-177-1875-S	1.371	34.83	113.13	503.22	224.57	39.30
C1234-177-2000-S	1.455	36.95	113.13	503.22	207.52	36.32
C1234-177-2125-S	1.538	39.08	113.13	503.22	192.87	33.75
C1234-177-2250-S	1.622	41.20	113.13	503.22	180.15	31.53
C1234-177-2375-S	1.706	43.32	113.13	503.22	169.01	29.58
C1234-177-2500-S	1.789	45.45	113.13	503.22	159.17	27.85
C1234-177-2625-S	1.873	47.57	113.13	503.22	150.41	26.32
C1234-177-2750-S	1.956	49.69	113.13	503.22	142.56	24.95
C1234-177-2875-S	2.040	51.82	113.13	503.22	135.49	23.71
C1234-177-3000-S	2.124	53.94	113.13	503.22	129.09	22.59
C1234-177-3250-S	2.291	58.19	113.13	503.22	117.95	20.64
C1234-177-3500-S	2.458	62.43	113.13	503.22	108.57	19.00
C1234-177-3750-S	2.625	66.68	113.13	503.22	100.58	17.60
C1234-177-4000-S	2.792	70.93	113.13	503.22	93.68	16.39
C1234-177-4250-S	2.960	75.17	113.13	503.22	87.67	15.34
C1234-177-4500-S	3.127	79.42	113.13	503.22	82.39	14.42
C1234-177-4750-S	3.294	83.67	113.13	503.22	77.70	13.60
C1234-177-5000-S	3.461	87.92	113.13	503.22	73.52	12.87
C1234-177-5250-S	3.628	92.16	113.13	503.22	69.77	12.21

FOR INFORMATION ON ALTERNATIVE FINISHES, SEE PAGE 311

Part Numbers with an "*" are squared and not ground. **Part Numbers in bold** represent the newly expanded Associated Spring RAYMOND compression spring offering.

MUSIC WIRE															STAINLESS STEEL						
Catalog #	Outside Diameter (OD)		Wire Diameter (d)		Free Length (L) Approx		Load Length (L_1)		Solid Height (Sh) Approx		Load (P) at L_1		Spring Rate (R)		Catalog #	Load Length (L_1)		Load (P) at L_1		Spring Rate (R)	
	in	mm	in	mm	in	mm	in	mm	in	mm	lb	N	lb/in	N/mm		in	mm	lb	N	lb/in	N/mm
C1234-177-5500-M	1.234	31.34	0.177	4.50	5.500	139.70	3.481	88.41	3.281	83.33	154.14	685.64	76.33	13.36	**C1234-177-5500-S**	3.796	96.41	113.13	503.22	66.38	11.62
C1234-177-5750-M	1.234	31.34	0.177	4.50	5.750	146.05	3.633	92.27	3.422	86.92	154.14	685.64	72.80	12.74	**C1234-177-5750-S**	3.963	100.66	113.13	503.22	63.30	11.08
C1234-177-6000-M	1.234	31.34	0.177	4.50	6.000	152.40	3.785	96.13	3.563	90.51	154.14	685.64	69.57	12.18	**C1234-177-6000-S**	4.130	104.90	113.13	503.22	60.50	10.59
C1234-177-6250-M	1.234	31.34	0.177	4.50	6.250	158.75	3.936	99.99	3.705	94.10	154.14	685.64	66.62	11.66	**C1234-177-6250-S**	4.297	109.15	113.13	503.22	57.93	10.14
C1234-177-6500-M	1.234	31.34	0.177	4.50	6.500	165.10	4.088	103.84	3.846	97.68	154.14	685.64	63.91	11.18	**C1234-177-6500-S**	4.464	113.40	113.13	503.22	55.58	9.73
C1234-177-6750-M	1.234	31.34	0.177	4.50	6.750	171.45	4.240	107.70	3.987	101.27	154.14	685.64	61.42	10.75	**C1234-177-6750-S**	4.632	117.64	113.13	503.22	53.40	9.35
C1234-177-7000-M	1.234	31.34	0.177	4.50	7.000	177.80	4.392	111.56	4.128	104.86	154.14	685.64	59.10	10.34	**C1234-177-7000-S**	4.799	121.89	113.13	503.22	51.40	8.99
C1234-177-7500-M	1.234	31.34	0.177	4.50	7.500	190.50	4.696	119.28	4.411	112.04	154.14	685.64	54.97	9.62	**C1234-177-7500-S**	5.133	130.38	113.13	503.22	47.80	8.36
C1234-177-8000-M	1.234	31.34	0.177	4.50	8.000	203.20	5.000	126.99	4.694	119.22	154.14	685.64	51.37	8.99	**C1234-177-8000-S**	5.468	138.88	113.13	503.22	44.67	7.82
C1234-177-8500-M	1.234	31.34	0.177	4.50	8.500	215.90	5.304	134.71	4.976	126.40	154.14	685.64	48.22	8.44	**C1234-177-8500-S**	5.802	147.37	113.13	503.22	41.93	7.34
C1234-177-9000-M	1.234	31.34	0.177	4.50	9.000	228.60	5.607	142.43	5.259	133.58	154.14	685.64	45.43	7.95	**C1234-177-9000-S**	6.136	155.87	113.13	503.22	39.51	6.91
C1234-177-9500-M	1.234	31.34	0.177	4.50	9.500	241.30	5.911	150.14	5.542	140.76	154.14	685.64	42.95	7.52	**C1234-177-9500-S**	6.471	164.36	113.13	503.22	37.35	6.54
C1234-192-1750-M	1.234	31.34	0.192	4.88	1.750	44.45	1.279	32.49	1.256	31.89	192.36	855.67	408.37	71.46	C1234-192-1750-S	1.357	34.47	139.57	620.83	355.10	62.14
C1234-192-1875-M	1.234	31.34	0.192	4.88	1.875	47.63	1.361	34.57	1.334	33.87	192.36	855.67	374.13	65.47	C1234-192-1875-S	1.446	36.73	139.57	620.83	325.33	56.93
C1234-192-2000-M	1.234	31.34	0.192	4.88	2.000	50.80	1.443	36.65	1.412	35.86	192.36	855.67	345.19	60.41	C1234-192-2000-S	1.535	38.99	139.57	620.83	300.17	52.53
C1234-192-2125-M	1.234	31.34	0.192	4.88	2.125	53.98	1.525	38.73	1.490	37.84	192.36	855.67	320.41	56.07	C1234-192-2125-S	1.624	41.25	139.57	620.83	278.62	48.76
C1234-192-2250-M	1.234	31.34	0.192	4.88	2.250	57.15	1.607	40.81	1.568	39.82	192.36	855.67	298.94	52.32	C1234-192-2250-S	1.713	43.51	139.57	620.83	259.95	45.49
C1234-192-2375-M	1.234	31.34	0.192	4.88	2.375	60.33	1.688	42.89	1.646	41.80	192.36	855.67	280.18	49.03	C1234-192-2375-S	1.802	45.77	139.57	620.83	243.63	42.64
C1234-192-2500-M	1.234	31.34	0.192	4.88	2.500	63.50	1.770	44.97	1.724	43.78	192.36	855.67	263.62	46.13	C1234-192-2500-S	1.891	48.04	139.57	620.83	229.24	40.12
C1234-192-2625-M	1.234	31.34	0.192	4.88	2.625	66.68	1.852	47.05	1.802	45.76	192.36	855.67	248.92	43.56	C1234-192-2625-S	1.980	50.30	139.57	620.83	216.45	37.88
C1234-192-2750-M	1.234	31.34	0.192	4.88	2.750	69.85	1.934	49.13	1.880	47.74	192.36	855.67	235.77	41.26	C1234-192-2750-S	2.069	52.56	139.57	620.83	205.02	35.88
C1234-192-2875-M	1.234	31.34	0.192	4.88	2.875	73.03	2.016	51.21	1.958	49.72	192.36	855.67	223.94	39.19	C1234-192-2875-S	2.158	54.82	139.57	620.83	194.73	34.08
C1234-192-3000-M	1.234	31.34	0.192	4.88	3.000	76.20	2.098	53.29	2.036	51.71	192.36	855.67	213.24	37.32	C1234-192-3000-S	2.247	57.08	139.57	620.83	185.42	32.45
C1234-192-3250-M	1.234	31.34	0.192	4.88	3.250	82.55	2.262	57.45	2.192	55.67	192.36	855.67	194.64	34.06	C1234-192-3250-S	2.425	61.60	139.57	620.83	169.25	29.62
C1234-192-3500-M	1.234	31.34	0.192	4.88	3.500	88.90	2.425	61.61	2.348	59.63	192.36	855.67	179.02	31.33	C1234-192-3500-S	2.603	66.13	139.57	620.83	155.67	27.24
C1234-192-3750-M	1.234	31.34	0.192	4.88	3.750	95.25	2.589	65.77	2.504	63.59	192.36	855.67	165.73	29.00	C1234-192-3750-S	2.782	70.65	139.57	620.83	144.11	25.22
C1234-192-4000-M	1.234	31.34	0.192	4.88	4.000	101.60	2.753	69.93	2.660	67.56	192.36	855.67	154.27	27.00	C1234-192-4000-S	2.960	75.17	139.57	620.83	134.15	23.48
C1234-192-4250-M	1.234	31.34	0.192	4.88	4.250	107.95	2.917	74.09	2.816	71.52	192.36	855.67	144.29	25.25	C1234-192-4250-S	3.138	79.70	139.57	620.83	125.47	21.96
C1234-192-4500-M	1.234	31.34	0.192	4.88	4.500	114.30	3.081	78.25	2.972	75.48	192.36	855.67	135.53	23.72	C1234-192-4500-S	3.316	84.22	139.57	620.83	117.85	20.62
C1234-192-4750-M	1.234	31.34	0.192	4.88	4.750	120.65	3.244	82.41	3.128	79.44	192.36	855.67	127.77	22.36	C1234-192-4750-S	3.494	88.74	139.57	620.83	111.10	19.44
C1234-192-5000-M	1.234	31.34	0.192	4.88	5.000	127.00	3.408	86.57	3.284	83.41	192.36	855.67	120.85	21.15	C1234-192-5000-S	3.672	93.26	139.57	620.83	105.08	18.39
C1234-192-5250-M	1.234	31.34	0.192	4.88	5.250	133.35	3.572	90.73	3.440	87.37	192.36	855.67	114.64	20.06	C1234-192-5250-S	3.850	97.79	139.57	620.83	99.69	17.44
C1234-192-5500-M	1.234	31.34	0.192	4.88	5.500	139.70	3.736	94.89	3.596	91.33	192.36	855.67	109.04	19.08	C1234-192-5500-S	4.028	102.31	139.57	620.83	94.81	16.59
C1234-192-5750-M	1.234	31.34	0.192	4.88	5.750	146.05	3.900	99.05	3.752	95.29	192.36	855.67	103.96	18.19	C1234-192-5750-S	4.206	106.83	139.57	620.83	90.40	15.82
C1234-192-6000-M	1.234	31.34	0.192	4.88	6.000	152.40	4.063	103.21	3.908	99.26	192.36	855.67	99.33	17.38	C1234-192-6000-S	4.384	111.36	139.57	620.83	86.37	15.12
C1234-192-6250-M	1.234	31.34	0.192	4.88	6.250	158.75	4.227	107.37	4.064	103.22	192.36	855.67	95.10	16.64	C1234-192-6250-S	4.562	115.88	139.57	620.83	82.69	14.47
C1234-192-6500-M	1.234	31.34	0.192	4.88	6.500	165.10	4.391	111.53	4.220	107.18	192.36	855.67	91.21	15.96	C1234-192-6500-S	4.740	120.40	139.57	620.83	79.31	13.88
C1234-192-6750-M	1.234	31.34	0.192	4.88	6.750	171.45	4.555	115.69	4.376	111.14	192.36	855.67	87.63	15.33	C1234-192-6750-S	4.918	124.93	139.57	620.83	76.20	13.33
C1234-192-7000-M	1.234	31.34	0.192	4.88	7.000	177.80	4.719	119.85	4.532	115.11	192.36	855.67	84.32	14.76	C1234-192-7000-S	5.096	129.45	139.57	620.83	73.32	12.83
C1234-192-7500-M	1.234	31.34	0.192	4.88	7.500	190.50	5.046	128.17	4.844	123.03	192.36	855.67	78.39	13.72	C1234-192-7500-S	5.453	138.49	139.57	620.83	68.17	11.93
C1234-192-8000-M	1.234	31.34	0.192	4.88	8.000	203.20	5.374	136.49	5.156	130.96	192.36	855.67	73.24	12.82	C1234-192-8000-S	5.809	147.54	139.57	620.83	63.69	11.15
C1234-192-8500-M	1.234	31.34	0.192	4.88	8.500	215.90	5.701	144.81	5.468	138.88	192.36	855.67	68.73	12.03	C1234-192-8500-S	6.165	156.59	139.57	620.83	59.77	10.46
C1234-192-9000-M	1.234	31.34	0.192	4.88	9.000	228.60	6.029	153.13	5.780	146.81	192.36	855.67	64.74	11.33	C1234-192-9000-S	6.521	165.63	139.57	620.83	56.30	9.85
C1234-192-9500-M	1.234	31.34	0.192	4.88	9.500	241.30	6.356	161.45	6.092	154.73	192.36	855.67	61.19	10.71	C1234-192-9500-S	6.877	174.68	139.57	620.83	53.21	9.31
C1234-207-1750-M	1.234	31.34	0.207	5.26	1.750	44.45	1.347	34.21	1.340	34.03	235.83	1049.02	585.19	102.41	C1234-207-1750-S	1.418	36.01	169.16	752.48	508.86	89.05
C1234-207-1875-M	1.234	31.34	0.207	5.26	1.875	47.63	1.434	36.43	1.424	36.18	235.83	1049.02	535.12	93.65	C1234-207-1875-S	1.511	38.39	169.16	752.48	465.33	81.43
C1234-207-2000-M	1.234	31.34	0.207	5.26	2.000	50.80	1.522	38.65	1.509	38.33	235.83	1049.02	492.95	86.27	C1234-207-2000-S	1.605	40.78	169.16	752.48	428.65	75.01
C1234-207-2125-M	1.234	31.34	0.207	5.26	2.125	53.98	1.609	40.87	1.594	40.48	235.83	1049.02	456.94	79.96	C1234-207-2125-S	1.699	43.16	169.16	752.48	397.34	69.53
C1234-207-2250-M	1.234	31.34	0.207	5.26	2.250	57.15	1.696	43.08	1.678	42.63	235.83	1049.02	425.83	74.52	C1234-207-2250-S	1.793	45.55	169.16	752.48	370.28	64.80
C1234-207-2375-M	1.234	31.34	0.207	5.26	2.375	60.33	1.783	45.30	1.763	44.78	235.83	1049.02	398.68	69.77	C1234-207-2375-S	1.887	47.93	169.16	752.48	346.68	60.67
C1234-207-2500-M	1.234	31.34	0.207	5.26	2.500	63.50	1.871	47.52	1.848	46.93	235.83	1049.02	374.79	65.59	C1234-207-2500-S	1.981	50.32	169.16	752.48	325.91	57.03
C1234-207-2625-M	1.234	31.34	0.207	5.26	2.625	66.68	1.958	49.73	1.932	49.08	235.83	1049.02	353.60	61.88	C1234-207-2625-S	2.075	52.70	169.16	752.48	307.48	53.81
C1234-207-2750-M	1.234	31.34	0.207	5.26	2.750	69.85	2.045	51.95	2.017	51.23	235.83	1049.02	334.68	58.57	C1234-207-2750-S	2.169	55.09	169.16	752.48	291.03	50.93
C1234-207-2875-M	1.234	31.34	0.207	5.26	2.875	73.03	2.133	54.17	2.102	53.38	235.83	1049.02	317.68	55.59	C1234-207-2875-S	2.263	57.47	169.16	752.48	276.25	48.34
C1234-207-3000-M	1.234	31.34	0.207	5.26	3.000	76.20	2.220	56.39	2.186	55.53	235.83	1049.02	302.33	52.91	C1234-207-3000-S	2.357	59.86	169.16	752.48	262.89	46.01
C1234-207-3250-M	1.234	31.34	0.207	5.26	3.250	82.55	2.395	60.82	2.356	59.84	235.83	1049.02	275.68	48.24	C1234-207-3250-S	2.544	64.63	169.16	752.48	239.72	41.95
C1234-207-3500-M	1.234	31.34	0.207	5.26	3.500	88.90	2.569	65.26	2.525	64.14	235.83	1049.02	253.34	44.34	C1234-207-3500-S	2.732	69.40	169.16	752.48	220.30	38.55
C1234-207-3750-M	1.234	31.34	0.207	5.26	3.750	95.25	2.744	69.69	2.694	68.44	235.83	1049.02	234.36	41.01	C1234-207-3750-S	2.920	74.17	169.16	752.48	203.79	35.66
C1234-207-4000-M	1.234	31.34	0.207	5.26	4.000	101.60	2.918	74.12	2.864	72.74	235.83	1049.02	218.02	38.15	C1234-207-4000-S	3.108	78.94	169.16	752.48	189.58	33.18
C1234-207-4250-M	1.234	31.34	0.207	5.26	4.250	107.95	3.093	78.56	3.033	77.04	235.83	1049.02	203.81	35.67	C1234-207-4250-S	3.295	83.71	169.16	752.48	177.23	31.01
C1234-207-4500-M	1.234	31.34	0.207	5.26	4.500	114.30	3.267	82.99	3.202	81.34	235.83	1049.02	191.34	33.48	C1234-207-4500-S	3.483	88.48	169.16	752.48	166.38	29.12
C1234-207-4750-M	1.234	31.34	0.207	5.26	4.750	120.65	3.442	87.43	3.372	85.64	235.83	1049.02	180.31	31.55	C1234-207-4750-S	3.671	93.25	169.16	752.48	156.79	27.44
C1234-207-5000-M	1.234	31.34	0.207	5.26	5.000	127.00	3.617	91.86	3.541	89.95	235.83	1049.02	170.48	29.83	C1234-207-5000-S	3.859	98.02	169.16	752.48	148.24	25.94
C1234-207-5250-M	1.234	31.34	0.207	5.26	5.250	133.35	3.791	96.30	3.711	94.25	235.83	1049.02	161.67	28.29	C1234-207-5250-S	4.047	102.79	169.16	752.48	140.58	24.60

Part Numbers with an "*" are squared and not ground. **Part Numbers in bold** represent the newly expanded Associated Spring RAYMOND compression spring offering.

MUSIC WIRE															STAINLESS STEEL					
Catalog #	Outside Diameter (OD)		Wire Diameter (d)		Free Length (L) Approx		Load Length (L_1)		Solid Height (Sh) Approx		Load (P) at L_1		Spring Rate (R)		Catalog #	Load Length (L_1)		Load (P) at L_1		Spring Rate (R)	
	in	mm	in	mm	in	mm	in	mm	in	mm	lb	N	lb/in	N/mm		in	mm	lb	N	lb/in	N/mm
C1234-207-5500-M	1.234	31.34	0.207	5.26	5.500	139.70	3.966	100.73	3.880	98.55	235.83	1049.02	153.72	26.90	**C1234-207-5500-S**	4.234	107.56	169.16	752.48	133.67	23.39
C1234-207-5750-M	1.234	31.34	0.207	5.26	5.750	146.05	4.140	105.17	4.049	102.85	235.83	1049.02	146.52	25.64	**C1234-207-5750-S**	4.422	112.33	169.16	752.48	127.41	22.30
C1234-207-6000-M	1.234	31.34	0.207	5.26	6.000	152.40	4.315	109.60	4.219	107.15	235.83	1049.02	139.96	24.49	**C1234-207-6000-S**	4.610	117.09	169.16	752.48	121.70	21.30
C1234-207-6250-M	1.234	31.34	0.207	5.26	6.250	158.75	4.490	114.04	4.388	111.45	235.83	1049.02	133.96	23.44	**C1234-207-6250-S**	4.798	121.86	169.16	752.48	116.49	20.39
C1234-207-6500-M	1.234	31.34	0.207	5.26	6.500	165.10	4.664	118.47	4.557	115.75	235.83	1049.02	128.46	22.48	**C1234-207-6500-S**	4.986	126.63	169.16	752.48	111.71	19.55
C1234-207-6750-M	1.234	31.34	0.207	5.26	6.750	171.45	4.839	122.91	4.727	120.06	235.83	1049.02	123.39	21.59	**C1234-207-6750-S**	5.173	131.40	169.16	752.48	107.30	18.78
C1234-207-7000-M	1.234	31.34	0.207	5.26	7.000	177.80	5.013	127.34	4.896	124.36	235.83	1049.02	118.71	20.77	**C1234-207-7000-S**	5.361	136.17	169.16	752.48	103.23	18.06
C1234-207-7500-M	1.234	31.34	0.207	5.26	7.500	190.50	5.363	136.21	5.235	132.96	235.83	1049.02	110.33	19.31	**C1234-207-7500-S**	5.737	145.71	169.16	752.48	95.94	16.79
C1234-207-8000-M	1.234	31.34	0.207	5.26	8.000	203.20	5.712	145.08	5.573	141.56	235.83	1049.02	103.06	18.04	**C1234-207-8000-S**	6.112	155.25	169.16	752.48	89.62	15.68
C1234-207-8500-M	1.234	31.34	0.207	5.26	8.500	215.90	6.061	153.95	5.912	150.16	235.83	1049.02	96.69	16.92	**C1234-207-8500-S**	6.488	164.79	169.16	752.48	84.08	14.71
C1234-207-9000-M	1.234	31.34	0.207	5.26	9.000	228.60	6.410	162.82	6.251	158.77	235.83	1049.02	91.06	15.93	**C1234-207-9000-S**	6.864	174.33	169.16	752.48	79.18	13.86
C1234-207-9500-M	1.234	31.34	0.207	5.26	9.500	241.30	6.759	171.69	6.589	167.37	235.83	1049.02	86.05	15.06	**C1234-207-9500-S**	7.239	183.87	169.16	752.48	74.82	13.09
C1234-225-1750-M	1.234	31.34	0.225	5.72	1.750	44.45	1.475	37.47	1.427	36.24	243.85	1084.68	887.81	155.37	**C1234-225-1750-S**	1.479	37.58	208.84	928.99	772.01	135.10
C1234-225-1875-M	1.234	31.34	0.225	5.72	1.875	47.63	1.572	39.93	1.519	38.57	245.34	1091.31	809.93	141.74	**C1234-225-1875-S**	1.578	40.09	208.84	928.99	704.29	123.25
C1234-225-2000-M	1.234	31.34	0.225	5.72	2.000	50.80	1.669	42.39	1.610	40.90	246.58	1096.86	744.61	130.31	**C1234-225-2000-S**	1.677	42.61	208.84	928.99	647.49	113.31
C1234-225-2125-M	1.234	31.34	0.225	5.72	2.125	53.98	1.766	44.85	1.702	43.24	247.65	1101.59	689.05	120.58	**C1234-225-2125-S**	1.776	45.12	208.84	928.99	599.17	104.85
C1234-225-2250-M	1.234	31.34	0.225	5.72	2.250	57.15	1.862	47.30	1.794	45.57	248.56	1105.66	641.20	112.21	**C1234-225-2250-S**	1.875	47.64	208.84	928.99	557.56	97.57
C1234-225-2375-M	1.234	31.34	0.225	5.72	2.375	60.33	1.959	49.76	1.886	47.90	249.36	1109.20	599.56	104.92	**C1234-225-2375-S**	1.974	50.15	208.84	928.99	521.36	91.24
C1234-225-2500-M	1.234	31.34	0.225	5.72	2.500	63.50	2.056	52.22	1.977	50.23	250.06	1112.31	563.00	98.53	**C1234-225-2500-S**	2.073	52.66	208.84	928.99	489.57	85.67
C1234-225-2625-M	1.234	31.34	0.225	5.72	2.625	66.68	2.153	54.68	2.069	52.56	250.68	1115.07	530.64	92.86	**C1234-225-2625-S**	2.172	55.18	208.84	928.99	461.43	80.75
C1234-225-2750-M	1.234	31.34	0.225	5.72	2.750	69.85	2.162	54.91	2.161	54.89	295.12	1312.76	501.81	87.82	**C1234-225-2750-S**	2.271	57.69	208.84	928.99	436.35	76.36
C1234-225-2875-M	1.234	31.34	0.225	5.72	2.875	73.03	2.255	57.27	2.253	57.22	295.12	1312.76	475.94	83.29	**C1234-225-2875-S**	2.370	60.21	208.84	928.99	413.86	72.43
C1234-225-3000-M	1.234	31.34	0.225	5.72	3.000	76.20	2.348	59.64	2.345	59.55	295.12	1312.76	452.61	79.21	**C1234-225-3000-S**	2.469	62.72	208.84	928.99	393.57	68.88
C1234-225-3250-M	1.234	31.34	0.225	5.72	3.250	82.55	2.534	64.36	2.528	64.21	295.12	1312.76	412.20	72.13	**C1234-225-3250-S**	2.667	67.75	208.84	928.99	358.43	62.73
C1234-225-3500-M	1.234	31.34	0.225	5.72	3.500	88.90	2.720	69.09	2.712	68.87	295.12	1312.76	378.41	66.22	**C1234-225-3500-S**	2.865	72.78	208.84	928.99	329.05	57.58
C1234-225-4000-M	1.234	31.34	0.225	5.72	4.000	101.60	3.092	78.54	3.079	78.20	295.12	1312.76	325.11	56.89	**C1234-225-4000-S**	3.261	82.84	208.84	928.99	282.71	49.47
C1234-225-4250-M	1.234	31.34	0.225	5.72	4.250	107.95	3.278	83.27	3.262	82.86	295.12	1312.76	303.72	53.15	**C1234-225-4250-S**	3.459	87.86	208.84	928.99	264.11	46.22
C1234-225-4500-M	1.234	31.34	0.225	5.72	4.500	114.30	3.464	88.00	3.446	87.52	295.12	1312.76	284.98	49.87	**C1234-225-4500-S**	3.657	92.89	208.84	928.99	247.81	43.37
C1234-225-4750-M	1.234	31.34	0.225	5.72	4.750	120.65	3.650	92.72	3.629	92.18	295.12	1312.76	268.41	46.97	**C1234-225-4750-S**	3.855	97.92	208.84	928.99	233.40	40.84
C1234-225-5000-M	1.234	31.34	0.225	5.72	5.000	127.00	3.837	97.45	3.813	96.84	295.12	1312.76	253.66	44.39	**C1234-225-5000-S**	4.053	102.95	208.84	928.99	220.57	38.60
C1234-225-5250-M	1.234	31.34	0.225	5.72	5.250	133.35	4.023	102.17	3.996	101.51	295.12	1312.76	240.45	42.08	**C1234-225-5250-S**	4.251	107.98	208.84	928.99	209.09	36.59
C1234-225-5500-M	1.234	31.34	0.225	5.72	5.500	139.70	4.209	106.90	4.180	106.17	295.12	1312.76	228.55	40.00	**C1234-225-5500-S**	4.449	113.01	208.84	928.99	198.74	34.78
C1234-225-5750-M	1.234	31.34	0.225	5.72	5.750	146.05	4.395	111.63	4.363	110.83	295.12	1312.76	217.76	38.11	**C1234-225-5750-S**	4.647	118.04	208.84	928.99	189.36	33.14
C1234-225-6250-M	1.234	31.34	0.225	5.72	6.250	158.75	4.767	121.08	4.730	120.15	295.12	1312.76	198.99	34.82	**C1234-225-6250-S**	5.043	128.09	208.84	928.99	173.04	30.28
C1234-225-6500-M	1.234	31.34	0.225	5.72	6.500	165.10	4.953	125.81	4.914	124.82	295.12	1312.76	190.77	33.38	**C1234-225-6500-S**	5.241	133.12	208.84	928.99	165.89	29.03
C1234-225-6750-M	1.234	31.34	0.225	5.72	6.750	171.45	5.139	130.53	5.098	129.48	295.12	1312.76	183.20	32.06	**C1234-225-6750-S**	5.439	138.15	208.84	928.99	159.30	27.88
C1234-225-7000-M	1.234	31.34	0.225	5.72	7.000	177.80	5.325	135.26	5.281	134.14	295.12	1312.76	176.21	30.84	**C1234-225-7000-S**	5.637	143.18	208.84	928.99	153.22	26.81
C1234-225-7500-M	1.234	31.34	0.225	5.72	7.500	190.50	5.697	144.71	5.648	143.46	295.12	1312.76	163.71	28.65	**C1234-225-7500-S**	6.033	153.24	208.84	928.99	142.36	24.91
C1234-225-8000-M	1.234	31.34	0.225	5.72	8.000	203.20	6.069	154.16	6.015	152.79	295.12	1312.76	152.87	26.75	**C1234-225-8000-S**	6.429	163.29	208.84	928.99	132.93	23.26
C1234-225-8500-M	1.234	31.34	0.225	5.72	8.500	215.90	6.442	163.62	6.382	162.11	295.12	1312.76	143.37	25.09	**C1234-225-8500-S**	6.825	173.35	208.84	928.99	124.67	21.82
C1234-225-9000-M	1.234	31.34	0.225	5.72	9.000	228.60	6.814	173.07	6.749	171.43	295.12	1312.76	134.99	23.62	**C1234-225-9000-S**	7.221	183.41	208.84	928.99	117.38	20.54
C1234-225-9500-M	1.234	31.34	0.225	5.72	9.500	241.30	7.186	182.52	7.116	180.76	295.12	1312.76	127.53	22.32	**C1234-225-9500-S**	7.617	193.47	208.84	928.99	110.90	19.41
C1293-105-2250-M	1.293	32.84	0.105	2.67	2.250	57.15	0.881	22.38	0.671	17.05	34.88	155.15	25.48	4.46	**C1293-105-2250-S**	1.030	26.17	27.02	120.19	22.16	3.88
C1293-105-2375-M	1.293	32.84	0.105	2.67	2.375	60.33	0.922	23.42	0.699	17.76	34.88	155.15	24.01	4.20	**C1293-105-2375-S**	1.081	27.45	27.02	120.19	20.88	3.65
C1293-105-2500-M	1.293	32.84	0.105	2.67	2.500	63.50	0.963	24.47	0.727	18.46	34.88	155.15	22.70	3.97	**C1293-105-2500-S**	1.131	28.72	27.02	120.19	19.74	3.45
C1293-105-2625-M	1.293	32.84	0.105	2.67	2.625	66.68	1.004	25.51	0.754	19.16	34.88	155.15	21.52	3.77	**C1293-105-2625-S**	1.181	30.00	27.02	120.19	18.72	3.28
C1293-105-2750-M	1.293	32.84	0.105	2.67	2.750	69.85	1.046	26.56	0.782	19.86	34.88	155.15	20.46	3.58	**C1293-105-2750-S**	1.231	31.28	27.02	120.19	17.79	3.11
C1293-105-2875-M	1.293	32.84	0.105	2.67	2.875	73.03	1.087	27.60	0.810	20.56	34.88	155.15	19.50	3.41	**C1293-105-2875-S**	1.282	32.56	27.02	120.19	16.96	2.97
C1293-105-3000-M	1.293	32.84	0.105	2.67	3.000	76.20	1.128	28.65	0.837	21.27	34.88	155.15	18.63	3.26	**C1293-105-3000-S**	1.332	33.83	27.02	120.19	16.20	2.83
C1293-105-3250-M	1.293	32.84	0.105	2.67	3.250	82.55	1.210	30.73	0.893	22.67	34.88	155.15	17.10	2.99	**C1293-105-3250-S**	1.433	36.39	27.02	120.19	14.87	2.60
C1293-105-3500-M	1.293	32.84	0.105	2.67	3.500	88.90	1.292	32.82	0.948	24.07	34.88	155.15	15.80	2.76	**C1293-105-3500-S**	1.533	38.94	27.02	120.19	13.74	2.40
C1293-105-3750-M	1.293	32.84	0.105	2.67	3.750	95.25	1.374	34.91	1.003	25.48	34.88	155.15	14.68	2.57	**C1293-105-3750-S**	1.634	41.49	27.02	120.19	12.77	2.23
C1293-105-4000-M	1.293	32.84	0.105	2.67	4.000	101.60	1.457	37.00	1.058	26.88	34.88	155.15	13.71	2.40	**C1293-105-4000-S**	1.734	44.05	27.02	120.19	11.93	2.09
C1293-105-4250-M	1.293	32.84	0.105	2.67	4.250	107.95	1.539	39.09	1.114	28.28	34.88	155.15	12.87	2.25	**C1293-105-4250-S**	1.835	46.60	27.02	120.19	11.19	1.96
C1293-105-4500-M	1.293	32.84	0.105	2.67	4.500	114.30	1.621	41.18	1.169	29.69	34.88	155.15	12.12	2.12	**C1293-105-4500-S**	1.935	49.15	27.02	120.19	10.54	1.84
C1293-105-4750-M	1.293	32.84	0.105	2.67	4.750	120.65	1.703	43.27	1.224	31.09	34.88	155.15	11.45	2.00	**C1293-105-4750-S**	2.036	51.71	27.02	120.19	9.96	1.74
C1293-105-5000-M	1.293	32.84	0.105	2.67	5.000	127.00	1.786	45.36	1.279	32.50	34.88	155.15	10.85	1.90	**C1293-105-5000-S**	2.136	54.26	27.02	120.19	9.44	1.65
C1293-105-5250-M	1.293	32.84	0.105	2.67	5.250	133.35	1.868	47.44	1.335	33.90	34.88	155.15	10.31	1.80	**C1293-105-5250-S**	2.237	56.81	27.02	120.19	8.97	1.57
C1293-105-5500-M	1.293	32.84	0.105	2.67	5.500	139.70	1.950	49.53	1.390	35.30	34.88	155.15	9.83	1.72	**C1293-105-5500-S**	2.337	59.37	27.02	120.19	8.54	1.50
C1293-105-5750-M	1.293	32.84	0.105	2.67	5.750	146.05	2.032	51.62	1.445	36.71	34.88	155.15	9.38	1.64	**C1293-105-5750-S**	2.438	61.92	27.02	120.19	8.16	1.43
C1293-105-6000-M	1.293	32.84	0.105	2.67	6.000	152.40	2.115	53.71	1.500	38.11	34.88	155.15	8.98	1.57	**C1293-105-6000-S**	2.538	64.48	27.02	120.19	7.81	1.37
C1293-105-6250-M	1.293	32.84	0.105	2.67	6.250	158.75	2.197	55.80	1.556	39.51	34.88	155.15	8.61	1.51	**C1293-105-6250-S**	2.639	67.03	27.02	120.19	7.48	1.31
C1293-105-6500-M	1.293	32.84	0.105	2.67	6.500	165.10	2.279	57.89	1.611	40.92	34.88	155.15	8.26	1.45	**C1293-105-6500-S**	2.739	69.58	27.02	120.19	7.19	1.26
C1293-105-6750-M	1.293	32.84	0.105	2.67	6.750	171.45	2.361	59.98	1.666	42.32	34.88	155.15	7.95	1.39	**C1293-105-6750-S**	2.840	72.14	27.02	120.19	6.91	1.21

FOR INFORMATION ON ALTERNATIVE FINISHES, SEE PAGE 311

Part Numbers with an "*" are squared and not ground. **Part Numbers in bold** represent the newly expanded Associated Spring RAYMOND compression spring offering.

MUSIC WIRE																STAINLESS STEEL						
Catalog #	Outside Diameter (OD)		Wire Diameter (d)		Free Length (L) Approx		Load Length (L_1)		Solid Height (Sh) Approx		Load (P) at L_1		Spring Rate (R)		Catalog #	Load Length (L_1)		Load (P) at L_1		Spring Rate (R)	
	in	mm	in	mm	in	mm	in	mm	in	mm	lb	N	lb/in	N/mm		in	mm	lb	N	lb/in	N/mm
C1293-105-7000-M	1.293	32.84	0.105	2.67	7.000	177.80	2.444	62.07	1.721	43.72	34.88	155.15	7.66	1.34	**C1293-105-7000-S**	2.941	74.69	27.02	120.19	6.66	1.16
C1293-105-7500-M	1.293	32.84	0.105	2.67	7.500	190.50	2.608	66.24	1.832	46.53	34.88	155.15	7.13	1.25	**C1293-105-7500-S**	3.142	79.80	27.02	120.19	6.20	1.09
C1293-105-8000-M	1.293	32.84	0.105	2.67	8.000	203.20	2.773	70.42	1.943	49.34	34.88	155.15	6.67	1.17	**C1293-105-8000-S**	3.343	84.90	27.02	120.19	5.80	1.02
C1293-105-8500-M	1.293	32.84	0.105	2.67	8.500	215.90	2.937	74.60	2.053	52.15	34.88	155.15	6.27	1.10	**C1293-105-8500-S**	3.544	90.01	27.02	120.19	5.45	0.95
C1293-105-9000-M	1.293	32.84	0.105	2.67	9.000	228.60	3.101	78.78	2.164	54.95	34.88	155.15	5.91	1.03	**C1293-105-9000-S**	3.745	95.12	27.02	120.19	5.14	0.90
C1293-105-9500-M	1.293	32.84	0.105	2.67	9.500	241.30	3.266	82.95	2.274	57.76	34.88	155.15	5.60	0.98	**C1293-105-9500-S**	3.946	100.23	27.02	120.19	4.87	0.85
C1293-112-2125-M	1.293	32.84	0.112	2.85	2.125	53.98	0.895	22.72	0.711	18.07	41.74	185.67	33.92	5.94	**C1293-112-2125-S**	1.034	26.27	32.18	143.13	29.50	5.16
C1293-112-2250-M	1.293	32.84	0.112	2.85	2.250	57.15	0.939	23.84	0.743	18.86	41.74	185.67	31.83	5.57	**C1293-112-2250-S**	1.087	27.62	32.18	143.13	27.68	4.84
C1293-112-2375-M	1.293	32.84	0.112	2.85	2.375	60.33	0.983	24.96	0.774	19.66	41.74	185.67	29.98	5.25	**C1293-112-2375-S**	1.141	28.97	32.18	143.13	26.07	4.56
C1293-112-2500-M	1.293	32.84	0.112	2.85	2.500	63.50	1.027	26.08	0.805	20.45	41.74	185.67	28.33	4.96	**C1293-112-2500-S**	1.194	30.33	32.18	143.13	24.64	4.31
C1293-112-2625-M	1.293	32.84	0.112	2.85	2.625	66.68	1.071	27.20	0.836	21.25	41.74	185.67	26.86	4.70	**C1293-112-2625-S**	1.247	31.68	32.18	143.13	23.35	4.09
C1293-112-2750-M	1.293	32.84	0.112	2.85	2.750	69.85	1.115	28.32	0.868	22.04	41.74	185.67	25.53	4.47	**C1293-112-2750-S**	1.300	33.03	32.18	143.13	22.20	3.88
C1293-112-2875-M	1.293	32.84	0.112	2.85	2.875	73.03	1.159	29.44	0.899	22.84	41.74	185.67	24.33	4.26	**C1293-112-2875-S**	1.354	34.39	32.18	143.13	21.15	3.70
C1293-112-3000-M	1.293	32.84	0.112	2.85	3.000	76.20	1.203	30.56	0.930	23.63	41.74	185.67	23.23	4.07	**C1293-112-3000-S**	1.407	35.74	32.18	143.13	20.20	3.54
C1293-112-3250-M	1.293	32.84	0.112	2.85	3.250	82.55	1.291	32.80	0.993	25.22	41.74	185.67	21.31	3.73	**C1293-112-3250-S**	1.514	38.44	32.18	143.13	18.53	3.24
C1293-112-3500-M	1.293	32.84	0.112	2.85	3.500	88.90	1.380	35.04	1.056	26.81	41.74	185.67	19.68	3.44	**C1293-112-3500-S**	1.620	41.15	32.18	143.13	17.12	3.00
C1293-112-3750-M	1.293	32.84	0.112	2.85	3.750	95.25	1.468	37.28	1.118	28.40	41.74	185.67	18.29	3.20	**C1293-112-3750-S**	1.727	43.86	32.18	143.13	15.90	2.78
C1293-112-4000-M	1.293	32.84	0.112	2.85	4.000	101.60	1.556	39.52	1.181	29.99	41.74	185.67	17.08	2.99	**C1293-112-4000-S**	1.833	46.56	32.18	143.13	14.85	2.60
C1293-112-4250-M	1.293	32.84	0.112	2.85	4.250	107.95	1.644	41.76	1.243	31.58	41.74	185.67	16.02	2.80	**C1293-112-4250-S**	1.940	49.27	32.18	143.13	13.93	2.44
C1293-112-4500-M	1.293	32.84	0.112	2.85	4.500	114.30	1.732	44.00	1.306	33.17	41.74	185.67	15.08	2.64	**C1293-112-4500-S**	2.046	51.98	32.18	143.13	13.11	2.29
C1293-112-4750-M	1.293	32.84	0.112	2.85	4.750	120.65	1.820	46.24	1.369	34.76	41.74	185.67	14.25	2.49	**C1293-112-4750-S**	2.153	54.68	32.18	143.13	12.39	2.17
C1293-112-5000-M	1.293	32.84	0.112	2.85	5.000	127.00	1.909	48.48	1.431	36.35	41.74	185.67	13.50	2.36	**C1293-112-5000-S**	2.259	57.39	32.18	143.13	11.74	2.05
C1293-112-5250-M	1.293	32.84	0.112	2.85	5.250	133.35	1.997	50.72	1.494	37.94	41.74	185.67	12.83	2.25	**C1293-112-5250-S**	2.366	60.09	32.18	143.13	11.16	1.95
C1293-112-5500-M	1.293	32.84	0.112	2.85	5.500	139.70	2.085	52.96	1.556	39.53	41.74	185.67	12.22	2.14	**C1293-112-5500-S**	2.472	62.80	32.18	143.13	10.63	1.86
C1293-112-5750-M	1.293	32.84	0.112	2.85	5.750	146.05	2.173	55.20	1.619	41.12	41.74	185.67	11.67	2.04	**C1293-112-5750-S**	2.579	65.51	32.18	143.13	10.15	1.78
C1293-112-6000-M	1.293	32.84	0.112	2.85	6.000	152.40	2.261	57.44	1.682	42.71	41.74	185.67	11.16	1.95	**C1293-112-6000-S**	2.686	68.21	32.18	143.13	9.71	1.70
C1293-112-6250-M	1.293	32.84	0.112	2.85	6.250	158.75	2.350	59.68	1.744	44.30	41.74	185.67	10.70	1.87	**C1293-112-6250-S**	2.792	70.92	32.18	143.13	9.31	1.63
C1293-112-6500-M	1.293	32.84	0.112	2.85	6.500	165.10	2.438	61.92	1.807	45.89	41.74	185.67	10.28	1.80	**C1293-112-6500-S**	2.899	73.62	32.18	143.13	8.94	1.56
C1293-112-6750-M	1.293	32.84	0.112	2.85	6.750	171.45	2.526	64.16	1.869	47.48	41.74	185.67	9.88	1.73	**C1293-112-6750-S**	3.005	76.33	32.18	143.13	8.59	1.50
C1293-112-7000-M	1.293	32.84	0.112	2.85	7.000	177.80	2.614	66.40	1.932	49.07	41.74	185.67	9.52	1.67	**C1293-112-7000-S**	3.112	79.04	32.18	143.13	8.28	1.45
C1293-112-7500-M	1.293	32.84	0.112	2.85	7.500	190.50	2.790	70.88	2.057	52.26	41.74	185.67	8.86	1.55	**C1293-112-7500-S**	3.325	84.45	32.18	143.13	7.71	1.35
C1293-112-8000-M	1.293	32.84	0.112	2.85	8.000	203.20	2.967	75.36	2.183	55.44	41.74	185.67	8.29	1.45	**C1293-112-8000-S**	3.538	89.86	32.18	143.13	7.21	1.26
C1293-112-8500-M	1.293	32.84	0.112	2.85	8.500	215.90	3.143	79.84	2.308	58.62	41.74	185.67	7.79	1.36	**C1293-112-8500-S**	3.751	95.27	32.18	143.13	6.78	1.19
C1293-112-9000-M*	1.293	32.84	0.112	2.85	9.000	228.60	3.392	86.16	2.522	64.07	41.74	185.67	7.44	1.30	**C1293-112-9000-S***	4.028	102.32	32.18	143.13	6.47	1.13
C1293-112-9500-M*	1.293	32.84	0.112	2.85	9.500	241.30	3.568	90.64	2.648	67.25	41.74	185.67	7.04	1.23	**C1293-112-9500-S***	4.241	107.73	32.18	143.13	6.12	1.07
C1293-125-2000-M	1.293	32.84	0.125	3.18	2.000	50.80	0.947	24.07	0.800	20.32	56.62	251.87	53.80	9.41	**C1293-125-2000-S**	1.076	27.32	43.24	192.34	46.78	8.19
C1293-125-2125-M	1.293	32.84	0.125	3.18	2.125	53.98	0.997	25.33	0.838	21.29	56.62	251.87	50.21	8.79	**C1293-125-2125-S**	1.135	28.82	43.24	192.34	43.66	7.64
C1293-125-2250-M	1.293	32.84	0.125	3.18	2.250	57.15	1.047	26.60	0.877	22.27	56.62	251.87	47.07	8.24	**C1293-125-2250-S**	1.194	30.32	43.24	192.34	40.93	7.16
C1293-125-2375-M	1.293	32.84	0.125	3.18	2.375	60.33	1.097	27.86	0.915	23.24	56.62	251.87	44.30	7.75	**C1293-125-2375-S**	1.253	31.82	43.24	192.34	38.53	6.74
C1293-125-2500-M	1.293	32.84	0.125	3.18	2.500	63.50	1.147	29.13	0.953	24.22	56.62	251.87	41.84	7.32	**C1293-125-2500-S**	1.312	33.32	43.24	192.34	36.39	6.37
C1293-125-2625-M	1.293	32.84	0.125	3.18	2.625	66.68	1.197	30.39	0.992	25.19	56.62	251.87	39.64	6.94	**C1293-125-2625-S**	1.371	34.81	43.24	192.34	34.47	6.03
C1293-125-2750-M	1.293	32.84	0.125	3.18	2.750	69.85	1.246	31.66	1.030	26.17	56.62	251.87	37.66	6.59	**C1293-125-2750-S**	1.430	36.31	43.24	192.34	32.75	5.73
C1293-125-2875-M	1.293	32.84	0.125	3.18	2.875	73.03	1.296	32.92	1.069	27.14	56.62	251.87	35.87	6.28	**C1293-125-2875-S**	1.489	37.81	43.24	192.34	31.19	5.46
C1293-125-3000-M	1.293	32.84	0.125	3.18	3.000	76.20	1.346	34.19	1.107	28.12	56.62	251.87	34.24	5.99	**C1293-125-3000-S**	1.548	39.31	43.24	192.34	29.77	5.21
C1293-125-3250-M	1.293	32.84	0.125	3.18	3.250	82.55	1.446	36.72	1.184	30.07	56.62	251.87	31.38	5.49	**C1293-125-3250-S**	1.665	42.30	43.24	192.34	27.29	4.78
C1293-125-3500-M	1.293	32.84	0.125	3.18	3.500	88.90	1.545	39.25	1.260	32.01	56.62	251.87	28.97	5.07	**C1293-125-3500-S**	1.783	45.30	43.24	192.34	25.19	4.41
C1293-125-3750-M	1.293	32.84	0.125	3.18	3.750	95.25	1.645	41.78	1.337	33.96	56.62	251.87	26.90	4.71	**C1293-125-3750-S**	1.901	48.30	43.24	192.34	23.39	4.09
C1293-125-4000-M	1.293	32.84	0.125	3.18	4.000	101.60	1.745	44.31	1.414	35.91	56.62	251.87	25.11	4.39	**C1293-125-4000-S**	2.019	51.29	43.24	192.34	21.83	3.82
C1293-125-4250-M	1.293	32.84	0.125	3.18	4.250	107.95	1.844	46.84	1.491	37.86	56.62	251.87	23.54	4.12	**C1293-125-4250-S**	2.137	54.29	43.24	192.34	20.47	3.58
C1293-125-4500-M	1.293	32.84	0.125	3.18	4.500	114.30	1.944	49.38	1.567	39.81	56.62	251.87	22.15	3.88	**C1293-125-4500-S**	2.255	57.28	43.24	192.34	19.26	3.37
C1293-125-4750-M	1.293	32.84	0.125	3.18	4.750	120.65	2.044	51.91	1.644	41.76	56.62	251.87	20.92	3.66	**C1293-125-4750-S**	2.373	60.28	43.24	192.34	18.19	3.18
C1293-125-5000-M	1.293	32.84	0.125	3.18	5.000	127.00	2.143	54.44	1.721	43.71	56.62	251.87	19.82	3.47	**C1293-125-5000-S**	2.491	63.28	43.24	192.34	17.24	3.02
C1293-125-5250-M	1.293	32.84	0.125	3.18	5.250	133.35	2.243	56.97	1.798	45.66	56.62	251.87	18.83	3.30	**C1293-125-5250-S**	2.609	66.27	43.24	192.34	16.37	2.87
C1293-125-5500-M	1.293	32.84	0.125	3.18	5.500	139.70	2.342	59.50	1.875	47.61	56.62	251.87	17.93	3.14	**C1293-125-5500-S**	2.727	69.27	43.24	192.34	15.59	2.73
C1293-125-5750-M	1.293	32.84	0.125	3.18	5.750	146.05	2.442	62.03	1.951	49.56	56.62	251.87	17.12	3.00	**C1293-125-5750-S**	2.845	72.26	43.24	192.34	14.89	2.60
C1293-125-6000-M	1.293	32.84	0.125	3.18	6.000	152.40	2.542	64.56	2.028	51.51	56.62	251.87	16.37	2.87	**C1293-125-6000-S**	2.963	75.26	43.24	192.34	14.24	2.49
C1293-125-6250-M	1.293	32.84	0.125	3.18	6.250	158.75	2.641	67.09	2.105	53.46	56.62	251.87	15.69	2.75	**C1293-125-6250-S**	3.081	78.26	43.24	192.34	13.64	2.39
C1293-125-6500-M	1.293	32.84	0.125	3.18	6.500	165.10	2.741	69.62	2.182	55.41	56.62	251.87	15.06	2.64	**C1293-125-6500-S**	3.199	81.25	43.24	192.34	13.10	2.29
C1293-125-6750-M*	1.293	32.84	0.125	3.18	6.750	171.45	2.916	74.06	2.351	59.72	56.62	251.87	14.77	2.58	**C1293-125-6750-S***	3.383	85.93	43.24	192.34	12.84	2.25
C1293-125-7000-M*	1.293	32.84	0.125	3.18	7.000	177.80	3.016	76.59	2.428	61.67	56.62	251.87	14.21	2.49	**C1293-125-7000-S***	3.501	88.92	43.24	192.34	12.36	2.16
C1293-125-7500-M*	1.293	32.84	0.125	3.18	7.500	190.50	3.215	81.66	2.582	65.57	56.62	251.87	13.21	2.31	**C1293-125-7500-S***	3.737	94.91	43.24	192.34	11.49	2.01
C1293-125-8000-M*	1.293	32.84	0.125	3.18	8.000	203.20	3.414	86.72	2.735	69.47	56.62	251.87	12.35	2.16	**C1293-125-8000-S***	3.973	100.91	43.24	192.34	10.74	1.88
C1293-125-8500-M*	1.293	32.84	0.125	3.18	8.500	215.90	3.613	91.78	2.889	73.37	56.62	251.87	11.59	2.03	**C1293-125-8500-S***	4.209	106.90	43.24	192.34	10.08	1.76
C1293-125-9000-M*	1.293	32.84	0.125	3.18	9.000	228.60	3.813	96.84	3.042	77.27	56.62	251.87	10.92	1.91	**C1293-125-9000-S***	4.445	112.89	43.24	192.34	9.49	1.66

Part Numbers with an "*" are squared and not ground. **Part Numbers in bold** represent the newly expanded Associated Spring RAYMOND compression spring offering.

MUSIC WIRE														
Catalog #	Outside Diameter (OD)		Wire Diameter (d)		Free Length (L) Approx		Load Length (L_1)		Solid Height (Sh) Approx		Load (P) at L_1		Spring Rate (R)	
	in	mm	in	mm	in	mm	in	mm	in	mm	lb	N	lb/in	N/mm
C1293-125-9500-M*	**1.293**	**32.84**	**0.125**	**3.18**	**9.500**	**241.30**	**4.012**	**101.90**	**3.196**	**81.17**	**56.62**	**251.87**	**10.32**	**1.81**
C1293-135-2000-M	**1.293**	**32.84**	**0.135**	**3.43**	**2.000**	**50.80**	**1.022**	**25.96**	**0.892**	**22.65**	**70.08**	**311.72**	**71.65**	**12.54**
C1293-135-2125-M	**1.293**	**32.84**	**0.135**	**3.43**	**2.125**	**53.98**	**1.076**	**27.34**	**0.936**	**23.77**	**70.08**	**311.72**	**66.82**	**11.69**
C1293-135-2250-M	**1.293**	**32.84**	**0.135**	**3.43**	**2.250**	**57.15**	**1.131**	**28.72**	**0.980**	**24.88**	**70.08**	**311.72**	**62.60**	**10.96**
C1293-135-2375-M	**1.293**	**32.84**	**0.135**	**3.43**	**2.375**	**60.33**	**1.185**	**30.10**	**1.024**	**26.00**	**70.08**	**311.72**	**58.89**	**10.31**
C1293-135-2500-M	**1.293**	**32.84**	**0.135**	**3.43**	**2.500**	**63.50**	**1.239**	**31.48**	**1.068**	**27.12**	**70.08**	**311.72**	**55.59**	**9.73**
C1293-135-2625-M	**1.293**	**32.84**	**0.135**	**3.43**	**2.625**	**66.68**	**1.294**	**32.86**	**1.112**	**28.23**	**70.08**	**311.72**	**52.64**	**9.21**
C1293-135-2750-M	**1.293**	**32.84**	**0.135**	**3.43**	**2.750**	**69.85**	**1.348**	**34.24**	**1.156**	**29.35**	**70.08**	**311.72**	**49.98**	**8.75**
C1293-135-2875-M	**1.293**	**32.84**	**0.135**	**3.43**	**2.875**	**73.03**	**1.402**	**35.62**	**1.199**	**30.47**	**70.08**	**311.72**	**47.58**	**8.33**
C1293-135-3000-M	**1.293**	**32.84**	**0.135**	**3.43**	**3.000**	**76.20**	**1.457**	**37.00**	**1.243**	**31.58**	**70.08**	**311.72**	**45.40**	**7.95**
C1293-135-3250-M	**1.293**	**32.84**	**0.135**	**3.43**	**3.250**	**82.55**	**1.565**	**39.76**	**1.331**	**33.82**	**70.08**	**311.72**	**41.60**	**7.28**
C1293-135-3500-M	**1.293**	**32.84**	**0.135**	**3.43**	**3.500**	**88.90**	**1.674**	**42.52**	**1.419**	**36.05**	**70.08**	**311.72**	**38.38**	**6.72**
C1293-135-3750-M	**1.293**	**32.84**	**0.135**	**3.43**	**3.750**	**95.25**	**1.783**	**45.28**	**1.507**	**38.28**	**70.08**	**311.72**	**35.62**	**6.23**
C1293-135-4000-M	**1.293**	**32.84**	**0.135**	**3.43**	**4.000**	**101.60**	**1.891**	**48.04**	**1.595**	**40.51**	**70.08**	**311.72**	**33.23**	**5.82**
C1293-135-4250-M	**1.293**	**32.84**	**0.135**	**3.43**	**4.250**	**107.95**	**2.000**	**50.80**	**1.683**	**42.75**	**70.08**	**311.72**	**31.14**	**5.45**
C1293-135-4500-M	**1.293**	**32.84**	**0.135**	**3.43**	**4.500**	**114.30**	**2.109**	**53.56**	**1.771**	**44.98**	**70.08**	**311.72**	**29.30**	**5.13**
C1293-135-4750-M	**1.293**	**32.84**	**0.135**	**3.43**	**4.750**	**120.65**	**2.217**	**56.32**	**1.859**	**47.21**	**70.08**	**311.72**	**27.67**	**4.84**
C1293-135-5000-M	**1.293**	**32.84**	**0.135**	**3.43**	**5.000**	**127.00**	**2.326**	**59.08**	**1.947**	**49.45**	**70.08**	**311.72**	**26.21**	**4.59**
C1293-135-5250-M	**1.293**	**32.84**	**0.135**	**3.43**	**5.250**	**133.35**	**2.435**	**61.84**	**2.035**	**51.68**	**70.08**	**311.72**	**24.89**	**4.36**
C1293-135-5500-M	**1.293**	**32.84**	**0.135**	**3.43**	**5.500**	**139.70**	**2.543**	**64.60**	**2.122**	**53.91**	**70.08**	**311.72**	**23.70**	**4.15**
C1293-135-5750-M	**1.293**	**32.84**	**0.135**	**3.43**	**5.750**	**146.05**	**2.652**	**67.36**	**2.210**	**56.14**	**70.08**	**311.72**	**22.62**	**3.96**
C1293-135-6000-M	**1.293**	**32.84**	**0.135**	**3.43**	**6.000**	**152.40**	**2.761**	**70.12**	**2.298**	**58.38**	**70.08**	**311.72**	**21.63**	**3.79**
C1293-135-6250-M	**1.293**	**32.84**	**0.135**	**3.43**	**6.250**	**158.75**	**2.869**	**72.88**	**2.386**	**60.61**	**70.08**	**311.72**	**20.73**	**3.63**
C1293-135-6500-M	**1.293**	**32.84**	**0.135**	**3.43**	**6.500**	**165.10**	**2.978**	**75.64**	**2.474**	**62.84**	**70.08**	**311.72**	**19.90**	**3.48**
C1293-135-6750-M	**1.293**	**32.84**	**0.135**	**3.43**	**6.750**	**171.45**	**3.087**	**78.40**	**2.562**	**65.08**	**70.08**	**311.72**	**19.13**	**3.35**
C1293-135-7000-M	**1.293**	**32.84**	**0.135**	**3.43**	**7.000**	**177.80**	**3.195**	**81.16**	**2.650**	**67.31**	**70.08**	**311.72**	**18.42**	**3.22**
C1293-135-7500-M*	**1.293**	**32.84**	**0.135**	**3.43**	**7.500**	**190.50**	**3.489**	**88.62**	**2.920**	**74.17**	**70.08**	**311.72**	**17.47**	**3.06**
C1293-135-8000-M*	**1.293**	**32.84**	**0.135**	**3.43**	**8.000**	**203.20**	**3.706**	**94.14**	**3.096**	**78.63**	**70.08**	**311.72**	**16.32**	**2.86**
C1293-135-8500-M*	**1.293**	**32.84**	**0.135**	**3.43**	**8.500**	**215.90**	**3.923**	**99.66**	**3.272**	**83.10**	**70.08**	**311.72**	**15.31**	**2.68**
C1293-135-9000-M*	**1.293**	**32.84**	**0.135**	**3.43**	**9.000**	**228.60**	**4.141**	**105.18**	**3.447**	**87.57**	**70.08**	**311.72**	**14.42**	**2.52**
C1293-135-9500-M*	**1.293**	**32.84**	**0.135**	**3.43**	**9.500**	**241.30**	**4.358**	**110.70**	**3.623**	**92.03**	**70.08**	**311.72**	**13.63**	**2.39**
C1293-148-1875-M	**1.293**	**32.84**	**0.148**	**3.76**	**1.875**	**47.63**	**1.056**	**26.83**	**0.958**	**24.32**	**90.34**	**401.87**	**110.38**	**19.32**
C1293-148-2000-M	**1.293**	**32.84**	**0.148**	**3.76**	**2.000**	**50.80**	**1.117**	**28.36**	**1.009**	**25.63**	**90.34**	**401.87**	**102.28**	**17.90**
C1293-148-2125-M	**1.293**	**32.84**	**0.148**	**3.76**	**2.125**	**53.98**	**1.177**	**29.89**	**1.060**	**26.93**	**90.34**	**401.87**	**95.29**	**16.68**
C1293-148-2250-M	**1.293**	**32.84**	**0.148**	**3.76**	**2.250**	**57.15**	**1.237**	**31.42**	**1.111**	**28.23**	**90.34**	**401.87**	**89.20**	**15.61**
C1293-148-2375-M	**1.293**	**32.84**	**0.148**	**3.76**	**2.375**	**60.33**	**1.297**	**32.95**	**1.162**	**29.53**	**90.34**	**401.87**	**83.83**	**14.67**
C1293-148-2500-M	**1.293**	**32.84**	**0.148**	**3.76**	**2.500**	**63.50**	**1.358**	**34.48**	**1.214**	**30.83**	**90.34**	**401.87**	**79.08**	**13.84**
C1293-148-2625-M	**1.293**	**32.84**	**0.148**	**3.76**	**2.625**	**66.68**	**1.418**	**36.01**	**1.265**	**32.13**	**90.34**	**401.87**	**74.83**	**13.10**
C1293-148-2750-M	**1.293**	**32.84**	**0.148**	**3.76**	**2.750**	**69.85**	**1.478**	**37.54**	**1.316**	**33.43**	**90.34**	**401.87**	**71.02**	**12.43**
C1293-148-2875-M	**1.293**	**32.84**	**0.148**	**3.76**	**2.875**	**73.03**	**1.538**	**39.07**	**1.367**	**34.73**	**90.34**	**401.87**	**67.58**	**11.83**
C1293-148-3000-M	**1.293**	**32.84**	**0.148**	**3.76**	**3.000**	**76.20**	**1.598**	**40.60**	**1.419**	**36.03**	**90.34**	**401.87**	**64.46**	**11.28**
C1293-148-3250-M	**1.293**	**32.84**	**0.148**	**3.76**	**3.250**	**82.55**	**1.719**	**43.66**	**1.521**	**38.63**	**90.34**	**401.87**	**59.00**	**10.33**
C1293-148-3500-M	**1.293**	**32.84**	**0.148**	**3.76**	**3.500**	**88.90**	**1.839**	**46.71**	**1.623**	**41.23**	**90.34**	**401.87**	**54.40**	**9.52**
C1293-148-3750-M	**1.293**	**32.84**	**0.148**	**3.76**	**3.750**	**95.25**	**1.960**	**49.77**	**1.726**	**43.83**	**90.34**	**401.87**	**50.46**	**8.83**
C1293-148-4000-M	**1.293**	**32.84**	**0.148**	**3.76**	**4.000**	**101.60**	**2.080**	**52.83**	**1.828**	**46.44**	**90.34**	**401.87**	**47.05**	**8.23**
C1293-148-4250-M	**1.293**	**32.84**	**0.148**	**3.76**	**4.250**	**107.95**	**2.200**	**55.89**	**1.931**	**49.04**	**90.34**	**401.87**	**44.08**	**7.71**
C1293-148-4500-M	**1.293**	**32.84**	**0.148**	**3.76**	**4.500**	**114.30**	**2.321**	**58.95**	**2.033**	**51.64**	**90.34**	**401.87**	**41.46**	**7.25**
C1293-148-4750-M	**1.293**	**32.84**	**0.148**	**3.76**	**4.750**	**120.65**	**2.441**	**62.01**	**2.135**	**54.24**	**90.34**	**401.87**	**39.13**	**6.85**
C1293-148-5000-M	**1.293**	**32.84**	**0.148**	**3.76**	**5.000**	**127.00**	**2.562**	**65.06**	**2.238**	**56.84**	**90.34**	**401.87**	**37.05**	**6.48**
C1293-148-5250-M	**1.293**	**32.84**	**0.148**	**3.76**	**5.250**	**133.35**	**2.682**	**68.12**	**2.340**	**59.44**	**90.34**	**401.87**	**35.18**	**6.16**
C1293-148-5500-M	**1.293**	**32.84**	**0.148**	**3.76**	**5.500**	**139.70**	**2.802**	**71.18**	**2.443**	**62.04**	**90.34**	**401.87**	**33.49**	**5.86**
C1293-148-5750-M	**1.293**	**32.84**	**0.148**	**3.76**	**5.750**	**146.05**	**2.923**	**74.24**	**2.545**	**64.65**	**90.34**	**401.87**	**31.96**	**5.59**
C1293-148-6000-M	**1.293**	**32.84**	**0.148**	**3.76**	**6.000**	**152.40**	**3.043**	**77.30**	**2.648**	**67.25**	**90.34**	**401.87**	**30.56**	**5.35**
C1293-148-6250-M	**1.293**	**32.84**	**0.148**	**3.76**	**6.250**	**158.75**	**3.164**	**80.36**	**2.750**	**69.85**	**90.34**	**401.87**	**29.27**	**5.12**
C1293-148-6500-M	**1.293**	**32.84**	**0.148**	**3.76**	**6.500**	**165.10**	**3.284**	**83.41**	**2.852**	**72.45**	**90.34**	**401.87**	**28.09**	**4.92**
C1293-148-6750-M	**1.293**	**32.84**	**0.148**	**3.76**	**6.750**	**171.45**	**3.404**	**86.47**	**2.955**	**75.05**	**90.34**	**401.87**	**27.00**	**4.73**
C1293-148-7000-M	**1.293**	**32.84**	**0.148**	**3.76**	**7.000**	**177.80**	**3.525**	**89.53**	**3.057**	**77.65**	**90.34**	**401.87**	**26.00**	**4.55**
C1293-148-7500-M	**1.293**	**32.84**	**0.148**	**3.76**	**7.500**	**190.50**	**3.766**	**95.65**	**3.262**	**82.85**	**90.34**	**401.87**	**24.19**	**4.23**
C1293-148-8000-M	**1.293**	**32.84**	**0.148**	**3.76**	**8.000**	**203.20**	**4.006**	**101.76**	**3.467**	**88.06**	**90.34**	**401.87**	**22.62**	**3.96**
C1293-148-8500-M	**1.293**	**32.84**	**0.148**	**3.76**	**8.500**	**215.90**	**4.247**	**107.88**	**3.672**	**93.26**	**90.34**	**401.87**	**21.24**	**3.72**
C1293-148-9000-M	**1.293**	**32.84**	**0.148**	**3.76**	**9.000**	**228.60**	**4.488**	**114.00**	**3.876**	**98.46**	**90.34**	**401.87**	**20.02**	**3.50**
C1293-148-9500-M	**1.293**	**32.84**	**0.148**	**3.76**	**9.500**	**241.30**	**4.729**	**120.11**	**4.081**	**103.67**	**90.34**	**401.87**	**18.94**	**3.31**
C1293-162-1875-M	**1.293**	**32.84**	**0.162**	**4.12**	**1.875**	**47.63**	**1.148**	**29.16**	**1.071**	**27.19**	**115.88**	**515.46**	**159.38**	**27.89**
C1293-162-2000-M	**1.293**	**32.84**	**0.162**	**4.12**	**2.000**	**50.80**	**1.214**	**30.84**	**1.129**	**28.69**	**115.88**	**515.46**	**147.49**	**25.81**

STAINLESS STEEL						
Catalog #	Load Length (L_1)		Load (P) at L_1		Spring Rate (R)	
	in	mm	lb	N	lb/in	N/mm
C1293-125-9500-S*	**4.680**	**118.88**	**43.24**	**192.34**	**8.97**	**1.57**
C1293-135-2000-S	**1.147**	**29.15**	**53.12**	**236.27**	**62.30**	**10.90**
C1293-135-2125-S	**1.211**	**30.76**	**53.12**	**236.27**	**58.11**	**10.17**
C1293-135-2250-S	**1.274**	**32.37**	**53.12**	**236.27**	**54.44**	**9.53**
C1293-135-2375-S	**1.338**	**33.98**	**53.12**	**236.27**	**51.21**	**8.96**
C1293-135-2500-S	**1.401**	**35.59**	**53.12**	**236.27**	**48.34**	**8.46**
C1293-135-2625-S	**1.465**	**37.20**	**53.12**	**236.27**	**45.77**	**8.01**
C1293-135-2750-S	**1.528**	**38.81**	**53.12**	**236.27**	**43.46**	**7.61**
C1293-135-2875-S	**1.591**	**40.42**	**53.12**	**236.27**	**41.38**	**7.24**
C1293-135-3000-S	**1.655**	**42.03**	**53.12**	**236.27**	**39.48**	**6.91**
C1293-135-3250-S	**1.782**	**45.25**	**53.12**	**236.27**	**36.17**	**6.33**
C1293-135-3500-S	**1.908**	**48.47**	**53.12**	**236.27**	**33.37**	**5.84**
C1293-135-3750-S	**2.035**	**51.69**	**53.12**	**236.27**	**30.97**	**5.42**
C1293-135-4000-S	**2.162**	**54.91**	**53.12**	**236.27**	**28.90**	**5.06**
C1293-135-4250-S	**2.289**	**58.13**	**53.12**	**236.27**	**27.08**	**4.74**
C1293-135-4500-S	**2.416**	**61.35**	**53.12**	**236.27**	**25.48**	**4.46**
C1293-135-4750-S	**2.542**	**64.58**	**53.12**	**236.27**	**24.06**	**4.21**
C1293-135-5000-S	**2.669**	**67.80**	**53.12**	**236.27**	**22.79**	**3.99**
C1293-135-5250-S	**2.796**	**71.02**	**53.12**	**236.27**	**21.64**	**3.79**
C1293-135-5500-S	**2.923**	**74.24**	**53.12**	**236.27**	**20.61**	**3.61**
C1293-135-5750-S	**3.050**	**77.46**	**53.12**	**236.27**	**19.67**	**3.44**
C1293-135-6000-S	**3.176**	**80.68**	**53.12**	**236.27**	**18.81**	**3.29**
C1293-135-6250-S	**3.303**	**83.90**	**53.12**	**236.27**	**18.02**	**3.15**
C1293-135-6500-S	**3.430**	**87.12**	**53.12**	**236.27**	**17.30**	**3.03**
C1293-135-6750-S	**3.557**	**90.34**	**53.12**	**236.27**	**16.63**	**2.91**
C1293-135-7000-S	**3.684**	**93.56**	**53.12**	**236.27**	**16.02**	**2.80**
C1293-135-7500-S*	**4.004**	**101.69**	**53.12**	**236.27**	**15.19**	**2.66**
C1293-135-8000-S*	**4.257**	**108.14**	**53.12**	**236.27**	**14.19**	**2.48**
C1293-135-8500-S*	**4.511**	**114.58**	**53.12**	**236.27**	**13.32**	**2.33**
C1293-135-9000-S*	**4.765**	**121.02**	**53.12**	**236.27**	**12.54**	**2.19**
C1293-135-9500-S*	**5.018**	**127.46**	**53.12**	**236.27**	**11.85**	**2.07**
C1293-148-1875-S	**1.169**	**29.68**	**67.80**	**301.60**	**95.98**	**16.80**
C1293-148-2000-S	**1.238**	**31.44**	**67.80**	**301.60**	**88.94**	**15.56**
C1293-148-2125-S	**1.307**	**33.19**	**67.80**	**301.60**	**82.86**	**14.50**
C1293-148-2250-S	**1.376**	**34.95**	**67.80**	**301.60**	**77.56**	**13.57**
C1293-148-2375-S	**1.445**	**36.70**	**67.80**	**301.60**	**72.90**	**12.76**
C1293-148-2500-S	**1.514**	**38.45**	**67.80**	**301.60**	**68.76**	**12.03**
C1293-148-2625-S	**1.583**	**40.21**	**67.80**	**301.60**	**65.07**	**11.39**
C1293-148-2750-S	**1.652**	**41.96**	**67.80**	**301.60**	**61.76**	**10.81**
C1293-148-2875-S	**1.721**	**43.72**	**67.80**	**301.60**	**58.76**	**10.28**
C1293-148-3000-S	**1.790**	**45.47**	**67.80**	**301.60**	**56.05**	**9.81**
C1293-148-3250-S	**1.928**	**48.98**	**67.80**	**301.60**	**51.31**	**8.98**
C1293-148-3500-S	**2.067**	**52.49**	**67.80**	**301.60**	**47.30**	**8.28**
C1293-148-3750-S	**2.205**	**56.00**	**67.80**	**301.60**	**43.88**	**7.68**
C1293-148-4000-S	**2.343**	**59.51**	**67.80**	**301.60**	**40.92**	**7.16**
C1293-148-4250-S	**2.481**	**63.02**	**67.80**	**301.60**	**38.33**	**6.71**
C1293-148-4500-S	**2.619**	**66.53**	**67.80**	**301.60**	**36.05**	**6.31**
C1293-148-4750-S	**2.757**	**70.04**	**67.80**	**301.60**	**34.03**	**5.95**
C1293-148-5000-S	**2.896**	**73.55**	**67.80**	**301.60**	**32.22**	**5.64**
C1293-148-5250-S	**3.034**	**77.05**	**67.80**	**301.60**	**30.59**	**5.35**
C1293-148-5500-S	**3.172**	**80.56**	**67.80**	**301.60**	**29.12**	**5.10**
C1293-148-5750-S	**3.310**	**84.07**	**67.80**	**301.60**	**27.79**	**4.86**
C1293-148-6000-S	**3.448**	**87.58**	**67.80**	**301.60**	**26.57**	**4.65**
C1293-148-6250-S	**3.586**	**91.09**	**67.80**	**301.60**	**25.45**	**4.45**
C1293-148-6500-S	**3.724**	**94.60**	**67.80**	**301.60**	**24.43**	**4.27**
C1293-148-6750-S	**3.863**	**98.11**	**67.80**	**301.60**	**23.48**	**4.11**
C1293-148-7000-S	**4.001**	**101.62**	**67.80**	**301.60**	**22.61**	**3.96**
C1293-148-7500-S	**4.277**	**108.64**	**67.80**	**301.60**	**21.04**	**3.68**
C1293-148-8000-S	**4.553**	**115.66**	**67.80**	**301.60**	**19.67**	**3.44**
C1293-148-8500-S	**4.830**	**122.67**	**67.80**	**301.60**	**18.47**	**3.23**
C1293-148-9000-S	**5.106**	**129.69**	**67.80**	**301.60**	**17.41**	**3.05**
C1293-148-9500-S	**5.382**	**136.71**	**67.80**	**301.60**	**16.47**	**2.88**
C1293-162-1875-S	**1.254**	**31.86**	**86.04**	**382.71**	**138.59**	**24.25**
C1293-162-2000-S	**1.329**	**33.76**	**86.04**	**382.71**	**128.25**	**22.44**

FOR INFORMATION ON ALTERNATIVE FINISHES, SEE PAGE 311

Part Numbers with an "*" are squared and not ground. **Part Numbers in bold** represent the newly expanded Associated Spring RAYMOND compression spring offering.

MUSIC WIRE																STAINLESS STEEL						
Catalog #	Outside Diameter (OD)		Wire Diameter (d)		Free Length (L) Approx		Load Length (L_1)		Solid Height (Sh) Approx		Load (P) at L_1		Spring Rate (R)		Catalog #	Load Length (L_1)		Load (P) at L_1		Spring Rate (R)	
	in	mm	in	mm	in	mm	in	mm	in	mm	lb	N	lb/in	N/mm		in	mm	lb	N	lb/in	N/mm
C1293-162-2125-M	1.293	32.84	0.162	4.12	2.125	53.98	1.281	32.53	1.188	30.18	115.88	515.46	137.25	24.02	**C1293-162-2125-S**	1.404	35.66	86.04	382.71	119.35	20.89
C1293-162-2250-M	1.293	32.84	0.162	4.12	2.250	57.15	1.347	34.22	1.247	31.68	115.88	515.46	128.35	22.46	**C1293-162-2250-S**	1.479	37.57	86.04	382.71	111.61	19.53
C1293-162-2375-M	1.293	32.84	0.162	4.12	2.375	60.33	1.414	35.90	1.306	33.17	115.88	515.46	120.52	21.09	**C1293-162-2375-S**	1.554	39.47	86.04	382.71	104.80	18.34
C1293-162-2500-M	1.293	32.84	0.162	4.12	2.500	63.50	1.480	37.59	1.365	34.67	115.88	515.46	113.60	19.88	**C1293-162-2500-S**	1.629	41.38	86.04	382.71	98.78	17.29
C1293-162-2625-M	1.293	32.84	0.162	4.12	2.625	66.68	1.546	39.28	1.424	36.16	115.88	515.46	107.43	18.80	**C1293-162-2625-S**	1.704	43.28	86.04	382.71	93.42	16.35
C1293-162-2750-M	1.293	32.84	0.162	4.12	2.750	69.85	1.613	40.96	1.483	37.66	115.88	515.46	101.89	17.83	**C1293-162-2750-S**	1.779	45.19	86.04	382.71	88.60	15.51
C1293-162-2875-M	1.293	32.84	0.162	4.12	2.875	73.03	1.679	42.65	1.542	39.15	115.88	515.46	96.90	16.96	**C1293-162-2875-S**	1.854	47.09	86.04	382.71	84.26	14.75
C1293-162-3000-M	1.293	32.84	0.162	4.12	3.000	76.20	1.746	44.34	1.600	40.65	115.88	515.46	92.38	16.17	**C1293-162-3000-S**	1.929	48.99	86.04	382.71	80.33	14.06
C1293-162-3250-M	1.293	32.84	0.162	4.12	3.250	82.55	1.878	47.71	1.718	43.64	115.88	515.46	84.48	14.78	**C1293-162-3250-S**	2.079	52.80	86.04	382.71	73.46	12.86
C1293-162-3500-M	1.293	32.84	0.162	4.12	3.500	88.90	2.011	51.08	1.836	46.63	115.88	515.46	77.83	13.62	**C1293-162-3500-S**	2.229	56.61	86.04	382.71	67.68	11.84
C1293-162-3750-M	1.293	32.84	0.162	4.12	3.750	95.25	2.144	54.46	1.954	49.62	115.88	515.46	72.15	12.63	**C1293-162-3750-S**	2.379	60.42	86.04	382.71	62.74	10.98
C1293-162-4000-M	1.293	32.84	0.162	4.12	4.000	101.60	2.277	57.83	2.071	52.61	115.88	515.46	67.25	11.77	**C1293-162-4000-S**	2.529	64.23	86.04	382.71	58.47	10.23
C1293-162-4250-M	1.293	32.84	0.162	4.12	4.250	107.95	2.410	61.20	2.189	55.60	115.88	515.46	62.96	11.02	**C1293-162-4250-S**	2.679	68.04	86.04	382.71	54.75	9.58
C1293-162-4500-M	1.293	32.84	0.162	4.12	4.500	114.30	2.542	64.58	2.307	58.59	115.88	515.46	59.19	10.36	**C1293-162-4500-S**	2.829	71.84	86.04	382.71	51.47	9.01
C1293-162-4750-M	1.293	32.84	0.162	4.12	4.750	120.65	2.675	67.95	2.424	61.58	115.88	515.46	55.85	9.77	**C1293-162-4750-S**	2.978	75.65	86.04	382.71	48.57	8.50
C1293-162-5000-M	1.293	32.84	0.162	4.12	5.000	127.00	2.808	71.32	2.542	64.57	115.88	515.46	52.87	9.25	**C1293-162-5000-S**	3.128	79.46	86.04	382.71	45.97	8.04
C1293-162-5250-M	1.293	32.84	0.162	4.12	5.250	133.35	2.941	74.70	2.660	67.56	115.88	515.46	50.18	8.78	**C1293-162-5250-S**	3.278	83.27	86.04	382.71	43.64	7.64
C1293-162-5500-M	1.293	32.84	0.162	4.12	5.500	139.70	3.074	78.07	2.778	70.55	115.88	515.46	47.76	8.36	**C1293-162-5500-S**	3.428	87.08	86.04	382.71	41.53	7.27
C1293-162-5750-M	1.293	32.84	0.162	4.12	5.750	146.05	3.206	81.44	2.895	73.54	115.88	515.46	45.56	7.97	**C1293-162-5750-S**	3.578	90.89	86.04	382.71	39.62	6.93
C1293-162-6000-M	1.293	32.84	0.162	4.12	6.000	152.40	3.339	84.82	3.013	76.53	115.88	515.46	43.55	7.62	**C1293-162-6000-S**	3.728	94.69	86.04	382.71	37.87	6.63
C1293-162-6250-M	1.293	32.84	0.162	4.12	6.250	158.75	3.472	88.19	3.131	79.52	115.88	515.46	41.71	7.30	**C1293-162-6250-S**	3.878	98.50	86.04	382.71	36.27	6.35
C1293-162-6500-M	1.293	32.84	0.162	4.12	6.500	165.10	3.605	91.56	3.249	82.51	115.88	515.46	40.03	7.00	**C1293-162-6500-S**	4.028	102.31	86.04	382.71	34.80	6.09
C1293-162-6750-M	1.293	32.84	0.162	4.12	6.750	171.45	3.738	94.94	3.366	85.50	115.88	515.46	38.47	6.73	**C1293-162-6750-S**	4.178	106.12	86.04	382.71	33.45	5.85
C1293-162-7000-M	1.293	32.84	0.162	4.12	7.000	177.80	3.870	98.31	3.484	88.49	115.88	515.46	37.03	6.48	**C1293-162-7000-S**	4.328	109.93	86.04	382.71	32.20	5.63
C1293-162-7500-M	1.293	32.84	0.162	4.12	7.500	190.50	4.136	105.06	3.720	94.48	115.88	515.46	34.45	6.03	**C1293-162-7500-S**	4.628	117.54	86.04	382.71	29.95	5.24
C1293-162-8000-M	1.293	32.84	0.162	4.12	8.000	203.20	4.402	111.80	3.955	100.46	115.88	515.46	32.20	5.64	**C1293-162-8000-S**	4.928	125.16	86.04	382.71	28.00	4.90
C1293-162-8500-M	1.293	32.84	0.162	4.12	8.500	215.90	4.667	118.55	4.190	106.44	115.88	515.46	30.23	5.29	**C1293-162-8500-S**	5.227	132.78	86.04	382.71	26.29	4.60
C1293-162-9000-M	1.293	32.84	0.162	4.12	9.000	228.60	4.933	125.29	4.426	112.42	115.88	515.46	28.49	4.99	**C1293-162-9000-S**	5.527	140.39	86.04	382.71	24.78	4.34
C1293-162-9500-M	1.293	32.84	0.162	4.12	9.500	241.30	5.198	132.04	4.661	118.40	115.88	515.46	26.94	4.71	**C1293-162-9500-S**	5.827	148.01	86.04	382.71	23.43	4.10
C1293-177-1750-M	1.293	32.84	0.177	4.50	1.750	44.45	1.167	29.63	1.117	28.37	147.75	657.21	253.22	44.31	**C1293-177-1750-S**	1.258	31.94	108.44	482.36	220.19	38.53
C1293-177-1875-M	1.293	32.84	0.177	4.50	1.875	47.63	1.239	31.48	1.183	30.06	147.75	657.21	232.41	40.67	**C1293-177-1875-S**	1.338	34.00	108.44	482.36	202.09	35.37
C1293-177-2000-M	1.293	32.84	0.177	4.50	2.000	50.80	1.312	33.33	1.250	31.75	147.75	657.21	214.76	37.58	**C1293-177-2000-S**	1.419	36.05	108.44	482.36	186.75	32.68
C1293-177-2125-M	1.293	32.84	0.177	4.50	2.125	53.98	1.385	35.17	1.317	33.45	147.75	657.21	199.60	34.93	**C1293-177-2125-S**	1.500	38.11	108.44	482.36	173.57	30.37
C1293-177-2250-M	1.293	32.84	0.177	4.50	2.250	57.15	1.458	37.02	1.384	35.14	147.75	657.21	186.44	32.63	**C1293-177-2250-S**	1.581	40.16	108.44	482.36	162.12	28.37
C1293-177-2375-M	1.293	32.84	0.177	4.50	2.375	60.33	1.530	38.87	1.450	36.84	147.75	657.21	174.91	30.61	**C1293-177-2375-S**	1.662	42.22	108.44	482.36	152.10	26.62
C1293-177-2500-M	1.293	32.84	0.177	4.50	2.500	63.50	1.603	40.72	1.517	38.53	147.75	657.21	164.72	28.83	**C1293-177-2500-S**	1.743	44.27	108.44	482.36	143.24	25.07
C1293-177-2625-M	1.293	32.84	0.177	4.50	2.625	66.68	1.676	42.57	1.584	40.23	147.75	657.21	155.66	27.24	**C1293-177-2625-S**	1.824	46.33	108.44	482.36	135.35	23.69
C1293-177-2750-M	1.293	32.84	0.177	4.50	2.750	69.85	1.749	44.41	1.650	41.92	147.75	657.21	147.53	25.82	**C1293-177-2750-S**	1.905	48.38	108.44	482.36	128.29	22.45
C1293-177-2875-M	1.293	32.84	0.177	4.50	2.875	73.03	1.821	46.26	1.717	43.62	147.75	657.21	140.22	24.54	**C1293-177-2875-S**	1.986	50.44	108.44	482.36	121.93	21.34
C1293-177-3000-M	1.293	32.84	0.177	4.50	3.000	76.20	1.894	48.11	1.784	45.31	147.75	657.21	133.60	23.38	**C1293-177-3000-S**	2.067	52.49	108.44	482.36	116.17	20.33
C1293-177-3250-M	1.293	32.84	0.177	4.50	3.250	82.55	2.040	51.81	1.917	48.70	147.75	657.21	122.06	21.36	**C1293-177-3250-S**	2.228	56.60	108.44	482.36	106.14	18.57
C1293-177-3500-M	1.293	32.84	0.177	4.50	3.500	88.90	2.185	55.50	2.051	52.09	147.75	657.21	112.36	19.66	**C1293-177-3500-S**	2.390	60.71	108.44	482.36	97.71	17.10
C1293-177-3750-M	1.293	32.84	0.177	4.50	3.750	95.25	2.331	59.20	2.184	55.48	147.75	657.21	104.09	18.22	**C1293-177-3750-S**	2.552	64.82	108.44	482.36	90.51	15.84
C1293-177-4000-M	1.293	32.84	0.177	4.50	4.000	101.60	2.476	62.89	2.318	58.87	147.75	657.21	96.95	16.97	**C1293-177-4000-S**	2.714	68.93	108.44	482.36	84.31	14.75
C1293-177-4250-M	1.293	32.84	0.177	4.50	4.250	107.95	2.622	66.59	2.451	62.25	147.75	657.21	90.73	15.88	**C1293-177-4250-S**	2.876	73.04	108.44	482.36	78.90	13.81
C1293-177-4500-M	1.293	32.84	0.177	4.50	4.500	114.30	2.767	70.28	2.584	65.64	147.75	657.21	85.26	14.92	**C1293-177-4500-S**	3.037	77.15	108.44	482.36	74.14	12.97
C1293-177-4750-M	1.293	32.84	0.177	4.50	4.750	120.65	2.913	73.98	2.718	69.03	147.75	657.21	80.41	14.07	**C1293-177-4750-S**	3.199	81.26	108.44	482.36	69.92	12.24
C1293-177-5000-M	1.293	32.84	0.177	4.50	5.000	127.00	3.058	77.68	2.851	72.42	147.75	657.21	76.09	13.31	**C1293-177-5000-S**	3.361	85.37	108.44	482.36	66.16	11.58
C1293-177-5250-M	1.293	32.84	0.177	4.50	5.250	133.35	3.204	81.37	2.985	75.81	147.75	657.21	72.20	12.64	**C1293-177-5250-S**	3.523	89.48	108.44	482.36	62.78	10.99
C1293-177-5500-M	1.293	32.84	0.177	4.50	5.500	139.70	3.349	85.07	3.118	79.20	147.75	657.21	68.69	12.02	**C1293-177-5500-S**	3.685	93.59	108.44	482.36	59.73	10.45
C1293-177-5750-M	1.293	32.84	0.177	4.50	5.750	146.05	3.495	88.76	3.252	82.59	147.75	657.21	65.51	11.46	**C1293-177-5750-S**	3.846	97.70	108.44	482.36	56.97	9.97
C1293-177-6000-M	1.293	32.84	0.177	4.50	6.000	152.40	3.640	92.46	3.385	85.98	147.75	657.21	62.61	10.96	**C1293-177-6000-S**	4.008	101.81	108.44	482.36	54.44	9.53
C1293-177-6250-M	1.293	32.84	0.177	4.50	6.250	158.75	3.786	96.16	3.518	89.37	147.75	657.21	59.96	10.49	**C1293-177-6250-S**	4.170	105.92	108.44	482.36	52.13	9.12
C1293-177-6500-M	1.293	32.84	0.177	4.50	6.500	165.10	3.931	99.85	3.652	92.75	147.75	657.21	57.52	10.07	**C1293-177-6500-S**	4.332	110.03	108.44	482.36	50.01	8.75
C1293-177-6750-M	1.293	32.84	0.177	4.50	6.750	171.45	4.077	103.55	3.785	96.14	147.75	657.21	55.27	9.67	**C1293-177-6750-S**	4.494	114.14	108.44	482.36	48.06	8.41
C1293-177-7000-M	1.293	32.84	0.177	4.50	7.000	177.80	4.222	107.24	3.919	99.53	147.75	657.21	53.19	9.31	**C1293-177-7000-S**	4.655	118.25	108.44	482.36	46.25	8.09
C1293-177-7500-M	1.293	32.84	0.177	4.50	7.500	190.50	4.513	114.64	4.185	106.31	147.75	657.21	49.47	8.66	**C1293-177-7500-S**	4.979	126.47	108.44	482.36	43.02	7.53
C1293-177-8000-M	1.293	32.84	0.177	4.50	8.000	203.20	4.804	122.03	4.452	113.09	147.75	657.21	46.23	8.09	**C1293-177-8000-S**	5.303	134.69	108.44	482.36	40.20	7.04
C1293-177-8500-M	1.293	32.84	0.177	4.50	8.500	215.90	5.095	129.42	4.719	119.87	147.75	657.21	43.40	7.59	**C1293-177-8500-S**	5.626	142.91	108.44	482.36	37.73	6.60
C1293-177-9000-M	1.293	32.84	0.177	4.50	9.000	228.60	5.386	136.81	4.986	126.64	147.75	657.21	40.89	7.15	**C1293-177-9000-S**	5.950	151.13	108.44	482.36	35.55	6.22
C1293-177-9500-M	1.293	32.84	0.177	4.50	9.500	241.30	5.677	144.20	5.253	133.42	147.75	657.21	38.65	6.76	**C1293-177-9500-S**	6.273	159.35	108.44	482.36	33.61	5.88
C1293-192-1750-M	1.293	32.84	0.192	4.88	1.750	44.45	1.244	31.60	1.212	30.80	184.51	820.74	364.64	63.81	**C1293-192-1750-S**	1.328	33.73	133.87	595.49	317.08	55.49
C1293-192-1875-M	1.293	32.84	0.192	4.88	1.875	47.63	1.323	33.60	1.286	32.68	184.51	820.74	334.07	58.46	**C1293-192-1875-S**	1.414	35.92	133.87	595.49	290.50	50.84
C1293-192-2000-M	1.293	32.84	0.192	4.88	2.000	50.80	1.401	35.60	1.361	34.56	184.51	820.74	308.23	53.94	**C1293-192-2000-S**	1.501	38.11	133.87	595.49	268.03	46.90

Part Numbers with an "*" are squared and not ground. **Part Numbers in bold** represent the newly expanded Associated Spring RAYMOND compression spring offering.

MUSIC WIRE															STAINLESS STEEL					
Catalog #	Outside Diameter (OD)		Wire Diameter (d)		Free Length (L) Approx		Load Length (L_1)		Solid Height (Sh) Approx		Load (P) at L_1		Spring Rate (R)		Catalog #	Load Length (L_1)		Load (P) at L_1		Spring Rate (R)	
	in	mm	in	mm	in	mm	in	mm	in	mm	lb	N	lb/in	N/mm		in	mm	lb	N	lb/in	N/mm
C1293-192-2125-M	1.293	32.84	0.192	4.88	2.125	53.98	1.480	37.59	1.435	36.44	184.51	820.74	286.10	50.07	**C1293-192-2125-S**	1.587	40.31	133.87	595.49	248.78	43.54
C1293-192-2250-M	1.293	32.84	0.192	4.88	2.250	57.15	1.559	39.59	1.509	38.32	184.51	820.74	266.93	46.71	**C1293-192-2250-S**	1.673	42.50	133.87	595.49	232.12	40.62
C1293-192-2375-M	1.293	32.84	0.192	4.88	2.375	60.33	1.637	41.59	1.583	40.20	184.51	820.74	250.18	43.78	**C1293-192-2375-S**	1.760	44.69	133.87	595.49	217.54	38.07
C1293-192-2500-M	1.293	32.84	0.192	4.88	2.500	63.50	1.716	43.59	1.657	42.08	184.51	820.74	235.40	41.19	**C1293-192-2500-S**	1.846	46.89	133.87	595.49	204.69	35.82
C1293-192-2625-M	1.293	32.84	0.192	4.88	2.625	66.68	1.795	45.59	1.731	43.96	184.51	820.74	222.27	38.90	**C1293-192-2625-S**	1.932	49.08	133.87	595.49	193.28	33.82
C1293-192-2750-M	1.293	32.84	0.192	4.88	2.750	69.85	1.874	47.59	1.805	45.84	184.51	820.74	210.52	36.84	**C1293-192-2750-S**	2.019	51.28	133.87	595.49	183.06	32.04
C1293-192-2875-M	1.293	32.84	0.192	4.88	2.875	73.03	1.952	49.59	1.879	47.72	184.51	820.74	199.96	34.99	**C1293-192-2875-S**	2.105	53.47	133.87	595.49	173.88	30.43
C1293-192-3000-M	1.293	32.84	0.192	4.88	3.000	76.20	2.031	51.59	1.953	49.61	184.51	820.74	190.41	33.32	**C1293-192-3000-S**	2.191	55.66	133.87	595.49	165.57	28.97
C1293-192-3250-M	1.293	32.84	0.192	4.88	3.250	82.55	2.188	55.58	2.101	53.37	184.51	820.74	173.80	30.41	**C1293-192-3250-S**	2.364	60.05	133.87	595.49	151.13	26.45
C1293-192-3500-M	1.293	32.84	0.192	4.88	3.500	88.90	2.346	59.58	2.249	57.13	184.51	820.74	159.85	27.97	**C1293-192-3500-S**	2.537	64.44	133.87	595.49	139.00	24.33
C1293-192-3750-M	1.293	32.84	0.192	4.88	3.750	95.25	2.503	63.58	2.397	60.89	184.51	820.74	147.98	25.90	**C1293-192-3750-S**	2.710	68.82	133.87	595.49	128.68	22.52
C1293-192-4000-M	1.293	32.84	0.192	4.88	4.000	101.60	2.661	67.58	2.545	64.65	184.51	820.74	137.75	24.11	**C1293-192-4000-S**	2.882	73.21	133.87	595.49	119.78	20.96
C1293-192-4250-M	1.293	32.84	0.192	4.88	4.250	107.95	2.818	71.58	2.693	68.41	184.51	820.74	128.84	22.55	**C1293-192-4250-S**	3.055	77.60	133.87	595.49	112.04	19.61
C1293-192-4500-M	1.293	32.84	0.192	4.88	4.500	114.30	2.975	75.57	2.842	72.18	184.51	820.74	121.02	21.18	**C1293-192-4500-S**	3.228	81.99	133.87	595.49	105.23	18.42
C1293-192-4750-M	1.293	32.84	0.192	4.88	4.750	120.65	3.133	79.57	2.990	75.94	184.51	820.74	114.09	19.97	**C1293-192-4750-S**	3.401	86.37	133.87	595.49	99.21	17.36
C1293-192-5000-M	1.293	32.84	0.192	4.88	5.000	127.00	3.290	83.57	3.138	79.70	184.51	820.74	107.91	18.88	**C1293-192-5000-S**	3.573	90.76	133.87	595.49	93.83	16.42
C1293-192-5250-M	1.293	32.84	0.192	4.88	5.250	133.35	3.448	87.57	3.286	83.46	184.51	820.74	102.36	17.91	**C1293-192-5250-S**	3.746	95.15	133.87	595.49	89.01	15.58
C1293-192-5500-M	1.293	32.84	0.192	4.88	5.500	139.70	3.605	91.56	3.434	87.22	184.51	820.74	97.36	17.04	**C1293-192-5500-S**	3.919	99.54	133.87	595.49	84.66	14.82
C1293-192-5750-M	1.293	32.84	0.192	4.88	5.750	146.05	3.762	95.56	3.582	90.99	184.51	820.74	92.83	16.24	**C1293-192-5750-S**	4.091	103.92	133.87	595.49	80.72	14.13
C1293-192-6000-M	1.293	32.84	0.192	4.88	6.000	152.40	3.920	99.56	3.730	94.75	184.51	820.74	88.69	15.52	**C1293-192-6000-S**	4.264	108.31	133.87	595.49	77.12	13.50
C1293-192-6250-M	1.293	32.84	0.192	4.88	6.250	158.75	4.077	103.56	3.878	98.51	184.51	820.74	84.91	14.86	**C1293-192-6250-S**	4.437	112.70	133.87	595.49	73.84	12.92
C1293-192-6500-M	1.293	32.84	0.192	4.88	6.500	165.10	4.234	107.56	4.026	102.27	184.51	820.74	81.44	14.25	**C1293-192-6500-S**	4.610	117.09	133.87	595.49	70.82	12.39
C1293-192-6750-M	1.293	32.84	0.192	4.88	6.750	171.45	4.392	111.55	4.175	106.03	184.51	820.74	78.24	13.69	**C1293-192-6750-S**	4.782	121.47	133.87	595.49	68.04	11.91
C1293-192-7000-M	1.293	32.84	0.192	4.88	7.000	177.80	4.549	115.55	4.323	109.79	184.51	820.74	75.29	13.18	**C1293-192-7000-S**	4.955	125.86	133.87	595.49	65.47	11.46
C1293-192-7500-M	1.293	32.84	0.192	4.88	7.500	190.50	4.864	123.55	4.619	117.32	184.51	820.74	70.00	12.25	**C1293-192-7500-S**	5.301	134.64	133.87	595.49	60.87	10.65
C1293-192-8000-M	1.293	32.84	0.192	4.88	8.000	203.20	5.179	131.54	4.915	124.84	184.51	820.74	65.40	11.45	**C1293-192-8000-S**	5.646	143.41	133.87	595.49	56.87	9.95
C1293-192-8500-M	1.293	32.84	0.192	4.88	8.500	215.90	5.494	139.54	5.211	132.37	184.51	820.74	61.37	10.74	**C1293-192-8500-S**	5.992	152.18	133.87	595.49	53.37	9.34
C1293-192-9000-M	1.293	32.84	0.192	4.88	9.000	228.60	5.808	147.53	5.507	139.89	184.51	820.74	57.81	10.12	**C1293-192-9000-S**	6.337	160.96	133.87	595.49	50.27	8.80
C1293-192-9500-M	1.293	32.84	0.192	4.88	9.500	241.30	6.123	155.53	5.804	147.41	184.51	820.74	54.64	9.56	**C1293-192-9500-S**	6.682	169.73	133.87	595.49	47.51	8.31
C1293-207-1875-M	1.293	32.84	0.207	5.26	1.875	47.63	1.398	35.50	1.379	35.03	226.37	1006.94	474.24	82.99	**C1293-207-1875-S**	1.481	37.62	162.38	722.29	412.38	72.17
C1293-207-2000-M	1.293	32.84	0.207	5.26	2.000	50.80	1.482	37.64	1.460	37.08	226.37	1006.94	436.86	76.45	**C1293-207-2000-S**	1.573	39.94	162.38	722.29	379.88	66.48
C1293-207-2125-M	1.293	32.84	0.207	5.26	2.125	53.98	1.566	39.78	1.541	39.13	226.37	1006.94	404.95	70.87	**C1293-207-2125-S**	1.664	42.26	162.38	722.29	352.13	61.62
C1293-207-2250-M	1.293	32.84	0.207	5.26	2.250	57.15	1.650	41.91	1.622	41.19	226.37	1006.94	377.38	66.04	**C1293-207-2250-S**	1.755	44.58	162.38	722.29	328.16	57.43
C1293-207-2375-M	1.293	32.84	0.207	5.26	2.375	60.33	1.734	44.05	1.702	43.24	226.37	1006.94	353.32	61.83	**C1293-207-2375-S**	1.846	46.90	162.38	722.29	307.24	53.77
C1293-207-2500-M	1.293	32.84	0.207	5.26	2.500	63.50	1.818	46.19	1.783	45.29	226.37	1006.94	332.15	58.13	**C1293-207-2500-S**	1.938	49.22	162.38	722.29	288.83	50.54
C1293-207-2625-M	1.293	32.84	0.207	5.26	2.625	66.68	1.903	48.33	1.864	47.34	226.37	1006.94	313.37	54.84	**C1293-207-2625-S**	2.029	51.54	162.38	722.29	272.50	47.69
C1293-207-2750-M	1.293	32.84	0.207	5.26	2.750	69.85	1.987	50.46	1.945	49.40	226.37	1006.94	296.60	51.91	**C1293-207-2750-S**	2.120	53.86	162.38	722.29	257.92	45.14
C1293-207-2875-M	1.293	32.84	0.207	5.26	2.875	73.03	2.071	52.60	2.026	51.45	226.37	1006.94	281.54	49.27	**C1293-207-2875-S**	2.212	56.18	162.38	722.29	244.82	42.84
C1293-207-3000-M	1.293	32.84	0.207	5.26	3.000	76.20	2.155	54.74	2.106	53.50	226.37	1006.94	267.93	46.89	**C1293-207-3000-S**	2.303	58.50	162.38	722.29	232.98	40.77
C1293-207-3250-M	1.293	32.84	0.207	5.26	3.250	82.55	2.323	59.02	2.268	57.61	226.37	1006.94	244.31	42.75	**C1293-207-3250-S**	2.486	63.14	162.38	722.29	212.44	37.18
C1293-207-3500-M	1.293	32.84	0.207	5.26	3.500	88.90	2.492	63.29	2.430	61.71	226.37	1006.94	224.52	39.29	**C1293-207-3500-S**	2.668	67.77	162.38	722.29	195.23	34.17
C1293-207-3750-M	1.293	32.84	0.207	5.26	3.750	95.25	2.660	67.57	2.591	65.81	226.37	1006.94	207.69	36.35	**C1293-207-3750-S**	2.851	72.41	162.38	722.29	180.60	31.61
C1293-207-4000-M	1.293	32.84	0.207	5.26	4.000	101.60	2.828	71.84	2.753	69.92	226.37	1006.94	193.21	33.81	**C1293-207-4000-S**	3.034	77.05	162.38	722.29	168.01	29.40
C1293-207-4250-M	1.293	32.84	0.207	5.26	4.250	107.95	2.997	76.12	2.914	74.02	226.37	1006.94	180.62	31.61	**C1293-207-4250-S**	3.216	81.69	162.38	722.29	157.06	27.49
C1293-207-4500-M	1.293	32.84	0.207	5.26	4.500	114.30	3.165	80.39	3.076	78.13	226.37	1006.94	169.57	29.67	**C1293-207-4500-S**	3.399	86.33	162.38	722.29	147.45	25.80
C1293-207-4750-M	1.293	32.84	0.207	5.26	4.750	120.65	3.333	84.67	3.238	82.23	226.37	1006.94	159.79	27.96	**C1293-207-4750-S**	3.581	90.97	162.38	722.29	138.95	24.32
C1293-207-5000-M	1.293	32.84	0.207	5.26	5.000	127.00	3.502	88.94	3.399	86.34	226.37	1006.94	151.08	26.44	**C1293-207-5000-S**	3.764	95.61	162.38	722.29	131.38	22.99
C1293-207-5250-M	1.293	32.84	0.207	5.26	5.250	133.35	3.670	93.22	3.561	90.44	226.37	1006.94	143.27	25.07	**C1293-207-5250-S**	3.947	100.24	162.38	722.29	124.59	21.80
C1293-207-5500-M	1.293	32.84	0.207	5.26	5.500	139.70	3.838	97.49	3.722	94.55	226.37	1006.94	136.23	23.84	**C1293-207-5500-S**	4.129	104.88	162.38	722.29	118.46	20.73
C1293-207-5750-M	1.293	32.84	0.207	5.26	5.750	146.05	4.007	101.77	3.884	98.65	226.37	1006.94	129.85	22.72	**C1293-207-5750-S**	4.312	109.52	162.38	722.29	112.91	19.76
C1293-207-6000-M	1.293	32.84	0.207	5.26	6.000	152.40	4.175	106.04	4.046	102.76	226.37	1006.94	124.04	21.71	**C1293-207-6000-S**	4.495	114.16	162.38	722.29	107.86	18.88
C1293-207-6250-M	1.293	32.84	0.207	5.26	6.250	158.75	4.343	110.32	4.207	106.86	226.37	1006.94	118.72	20.78	**C1293-207-6250-S**	4.677	118.80	162.38	722.29	103.24	18.07
C1293-207-6500-M	1.293	32.84	0.207	5.26	6.500	165.10	4.512	114.60	4.369	110.97	226.37	1006.94	113.85	19.92	**C1293-207-6500-S**	4.860	123.44	162.38	722.29	99.00	17.32
C1293-207-6750-M	1.293	32.84	0.207	5.26	6.750	171.45	4.680	118.87	4.530	115.07	226.37	1006.94	109.35	19.14	**C1293-207-6750-S**	5.042	128.08	162.38	722.29	95.09	16.64
C1293-207-7000-M	1.293	32.84	0.207	5.26	7.000	177.80	4.848	123.15	4.692	119.18	226.37	1006.94	105.20	18.41	**C1293-207-7000-S**	5.225	132.72	162.38	722.29	91.48	16.01
C1293-207-7500-M	1.293	32.84	0.207	5.26	7.500	190.50	5.185	131.70	5.015	127.39	226.37	1006.94	97.78	17.11	**C1293-207-7500-S**	5.590	141.99	162.38	722.29	85.03	14.88
C1293-207-8000-M	1.293	32.84	0.207	5.26	8.000	203.20	5.522	140.25	5.338	135.60	226.37	1006.94	91.34	15.98	**C1293-207-8000-S**	5.955	151.27	162.38	722.29	79.42	13.90
C1293-207-8500-M	1.293	32.84	0.207	5.26	8.500	215.90	5.858	148.80	5.662	143.80	226.37	1006.94	85.69	15.00	**C1293-207-8500-S**	6.321	160.55	162.38	722.29	74.51	13.04
C1293-207-9000-M	1.293	32.84	0.207	5.26	9.000	228.60	6.195	157.35	5.985	152.01	226.37	1006.94	80.70	14.12	**C1293-207-9000-S**	6.686	169.82	162.38	722.29	70.17	12.28
C1293-207-9500-M	1.293	32.84	0.207	5.26	9.500	241.30	6.531	165.90	6.308	160.22	226.37	1006.94	76.26	13.34	**C1293-207-9500-S**	7.051	179.10	162.38	722.29	66.31	11.60
C1293-225-1875-M	1.293	32.84	0.225	5.72	1.875	47.63	1.477	37.50	1.477	37.50	283.56	1261.36	711.63	124.54	**C1293-225-1875-S**	1.551	39.39	200.67	892.61	618.81	108.29
C1293-225-2000-M	1.293	32.84	0.225	5.72	2.000	50.80	1.567	39.79	1.565	39.74	283.56	1261.36	654.24	114.49	**C1293-225-2000-S**	1.647	41.84	200.67	892.61	568.90	99.56
C1293-225-2125-M	1.293	32.84	0.225	5.72	2.125	53.98	1.657	42.08	1.653	41.98	283.56	1261.36	605.42	105.95	**C1293-225-2125-S**	1.744	44.29	200.67	892.61	526.45	92.13
C1293-225-2250-M	1.293	32.84	0.225	5.72	2.250	57.15	1.747	44.37	1.741	44.21	283.56	1261.36	563.37	98.59	**C1293-225-2250-S**	1.840	46.75	200.67	892.61	489.89	85.73

FOR INFORMATION ON ALTERNATIVE FINISHES, SEE PAGE 311

Part Numbers with an "*" are squared and not ground. **Part Numbers in bold** represent the newly expanded Associated Spring RAYMOND compression spring offering.

MUSIC WIRE															STAINLESS STEEL						
Catalog #	Outside Diameter (OD)		Wire Diameter (d)		Free Length (L) Approx		Load Length (L_1)		Solid Height (Sh) Approx		Load (P) at L_1		Spring Rate (R)		Catalog #	Load Length (L_1)		Load (P) at L_1		Spring Rate (R)	
	in	mm	in	mm	in	mm	in	mm	in	mm	lb	N	lb/in	N/mm		in	mm	lb	N	lb/in	N/mm
C1293-225-2375-M	1.293	32.84	0.225	5.72	2.375	60.33	1.837	46.65	1.829	46.45	283.56	1261.36	526.79	92.19	**C1293-225-2375-S**	1.937	49.20	200.67	892.61	458.08	80.16
C1293-225-2500-M	1.293	32.84	0.225	5.72	2.500	63.50	1.927	48.94	1.917	48.69	283.56	1261.36	494.67	86.57	**C1293-225-2500-S**	2.033	51.65	200.67	892.61	430.15	75.28
C1293-225-2625-M	1.293	32.84	0.225	5.72	2.625	66.68	2.017	51.23	2.005	50.93	283.56	1261.36	466.24	81.59	**C1293-225-2625-S**	2.130	54.10	200.67	892.61	405.43	70.95
C1293-225-2750-M	1.293	32.84	0.225	5.72	2.750	69.85	2.107	53.51	2.093	53.16	283.56	1261.36	440.90	77.16	**C1293-225-2750-S**	2.227	56.56	200.67	892.61	383.39	67.09
C1293-225-2875-M	1.293	32.84	0.225	5.72	2.875	73.03	2.197	55.80	2.181	55.40	283.56	1261.36	418.17	73.18	**C1293-225-2875-S**	2.323	59.01	200.67	892.61	363.63	63.64
C1293-225-3000-M	1.293	32.84	0.225	5.72	3.000	76.20	2.287	58.09	2.269	57.64	283.56	1261.36	397.68	69.59	**C1293-225-3000-S**	2.420	61.46	200.67	892.61	345.80	60.52
C1293-225-3250-M	1.293	32.84	0.225	5.72	3.250	82.55	2.467	62.66	2.445	62.11	283.56	1261.36	362.17	63.38	**C1293-225-3250-S**	2.613	66.37	200.67	892.61	314.93	55.11
C1293-225-3500-M	1.293	32.84	0.225	5.72	3.500	88.90	2.647	67.24	2.621	66.58	283.56	1261.36	332.48	58.18	**C1293-225-3500-S**	2.806	71.27	200.67	892.61	289.12	50.60
C1293-225-3750-M	1.293	32.84	0.225	5.72	3.750	95.25	2.827	71.81	2.798	71.06	283.56	1261.36	307.29	53.78	**C1293-225-3750-S**	2.999	76.18	200.67	892.61	267.21	46.76
C1293-225-4000-M	1.293	32.84	0.225	5.72	4.000	101.60	3.007	76.39	2.974	75.53	283.56	1261.36	285.65	49.99	**C1293-225-4000-S**	3.192	81.08	200.67	892.61	248.40	43.47
C1293-225-4250-M	1.293	32.84	0.225	5.72	4.250	107.95	3.187	80.96	3.150	80.01	283.56	1261.36	266.86	46.70	**C1293-225-4250-S**	3.385	85.99	200.67	892.61	232.05	40.61
C1293-225-4500-M	1.293	32.84	0.225	5.72	4.500	114.30	3.368	85.53	3.326	84.48	283.56	1261.36	250.39	43.82	**C1293-225-4500-S**	3.578	90.89	200.67	892.61	217.73	38.10
C1293-225-4750-M	1.293	32.84	0.225	5.72	4.750	120.65	3.548	90.11	3.502	88.96	283.56	1261.36	235.83	41.27	**C1293-225-4750-S**	3.771	95.80	200.67	892.61	205.07	35.89
C1293-225-5000-M	1.293	32.84	0.225	5.72	5.000	127.00	3.728	94.68	3.678	93.43	283.56	1261.36	222.87	39.00	**C1293-225-5000-S**	3.965	100.70	200.67	892.61	193.80	33.92
C1293-225-5250-M	1.293	32.84	0.225	5.72	5.250	133.35	3.908	99.26	3.854	97.90	283.56	1261.36	211.27	36.97	**C1293-225-5250-S**	4.158	105.61	200.67	892.61	183.71	32.15
C1293-225-5500-M	1.293	32.84	0.225	5.72	5.500	139.70	4.088	103.83	4.031	102.38	283.56	1261.36	200.81	35.14	**C1293-225-5500-S**	4.351	110.51	200.67	892.61	174.61	30.56
C1293-225-5750-M	1.293	32.84	0.225	5.72	5.750	146.05	4.268	108.41	4.207	106.85	283.56	1261.36	191.33	33.48	**C1293-225-5750-S**	4.544	115.42	200.67	892.61	166.38	29.12
C1293-225-6000-M	1.293	32.84	0.225	5.72	6.000	152.40	4.448	112.98	4.383	111.33	283.56	1261.36	182.72	31.98	**C1293-225-6000-S**	4.737	120.32	200.67	892.61	158.88	27.80
C1293-225-6250-M	1.293	32.84	0.225	5.72	6.250	158.75	4.628	117.55	4.559	115.80	283.56	1261.36	174.84	30.60	**C1293-225-6250-S**	4.930	125.23	200.67	892.61	152.04	26.61
C1293-225-6500-M	1.293	32.84	0.225	5.72	6.500	165.10	4.808	122.13	4.735	120.27	283.56	1261.36	167.62	29.33	**C1293-225-6500-S**	5.123	130.13	200.67	892.61	145.75	25.51
C1293-225-6750-M	1.293	32.84	0.225	5.72	6.750	171.45	4.988	126.70	4.911	124.75	283.56	1261.36	160.96	28.17	**C1293-225-6750-S**	5.316	135.04	200.67	892.61	139.97	24.49
C1293-225-7000-M	1.293	32.84	0.225	5.72	7.000	177.80	5.168	131.28	5.087	129.22	283.56	1261.36	154.82	27.09	**C1293-225-7000-S**	5.509	139.94	200.67	892.61	134.63	23.56
C1293-225-7500-M	1.293	32.84	0.225	5.72	7.500	190.50	5.529	140.43	5.440	138.17	283.56	1261.36	143.84	25.17	**C1293-225-7500-S**	5.896	149.75	200.67	892.61	125.08	21.89
C1293-225-8000-M	1.293	32.84	0.225	5.72	8.000	203.20	5.889	149.58	5.792	147.12	283.56	1261.36	134.31	23.50	**C1293-225-8000-S**	6.282	159.56	200.67	892.61	116.80	20.44
C1293-225-8500-M	1.293	32.84	0.225	5.72	8.500	215.90	6.249	158.72	6.144	156.07	283.56	1261.36	125.97	22.05	**C1293-225-8500-S**	6.668	169.37	200.67	892.61	109.54	19.17
C1293-225-9000-M	1.293	32.84	0.225	5.72	9.000	228.60	6.609	167.87	6.497	165.01	283.56	1261.36	118.61	20.76	**C1293-225-9000-S**	7.054	179.18	200.67	892.61	103.14	18.05
C1293-225-9500-M	1.293	32.84	0.225	5.72	9.500	241.30	6.969	177.02	6.849	173.96	283.56	1261.36	112.05	19.61	**C1293-225-9500-S**	7.441	188.99	200.67	892.61	97.44	17.05
C1293-250-1875-M	1.293	32.84	0.250	6.35	1.875	47.63	1.632	41.44	1.589	40.35	297.42	1323.00	1221.49	213.76	**C1293-250-1875-S**	1.629	41.38	261.18	1161.78	1062.17	185.88
C1293-250-2000-M	1.293	32.84	0.250	6.35	2.000	50.80	1.732	44.00	1.685	42.80	299.59	1332.63	1119.70	195.95	**C1293-250-2000-S**	1.732	43.99	261.18	1161.78	973.65	170.39
C1293-250-2125-M	1.293	32.84	0.250	6.35	2.125	53.98	1.833	46.57	1.782	45.26	301.42	1340.77	1033.57	180.87	**C1293-250-2125-S**	1.834	46.59	261.18	1161.78	898.76	157.28
C1293-250-2250-M	1.293	32.84	0.250	6.35	2.250	57.15	1.934	49.13	1.879	47.72	302.99	1347.75	959.74	167.96	**C1293-250-2250-S**	1.937	49.20	261.18	1161.78	834.56	146.05
C1293-250-2375-M	1.293	32.84	0.250	6.35	2.375	60.33	2.035	51.70	1.975	50.17	304.35	1353.79	895.76	156.76	**C1293-250-2375-S**	2.040	51.81	261.18	1161.78	778.92	136.31
C1293-250-2500-M	1.293	32.84	0.250	6.35	2.500	63.50	2.136	54.26	2.072	52.63	305.53	1359.09	839.78	146.96	**C1293-250-2500-S**	2.142	54.42	261.18	1161.78	730.24	127.79
C1293-250-2625-M	1.293	32.84	0.250	6.35	2.625	66.68	2.237	56.82	2.169	55.08	306.58	1363.76	790.38	138.32	**C1293-250-2625-S**	2.245	57.02	261.18	1161.78	687.29	120.27
C1293-250-2750-M	1.293	32.84	0.250	6.35	2.750	69.85	2.338	59.39	2.265	57.54	307.52	1367.91	746.47	130.63	**C1293-250-2750-S**	2.348	59.63	261.18	1161.78	649.10	113.59
C1293-250-2875-M	1.293	32.84	0.250	6.35	2.875	73.03	2.439	61.95	2.362	60.00	308.35	1371.62	707.18	123.76	**C1293-250-2875-S**	2.450	62.24	261.18	1161.78	614.94	107.61
C1293-250-3000-M	1.293	32.84	0.250	6.35	3.000	76.20	2.540	64.51	2.459	62.45	309.10	1374.96	671.82	117.57	**C1293-250-3000-S**	2.553	64.84	261.18	1161.78	584.19	102.23
C1293-250-3250-M	1.293	32.84	0.250	6.35	3.250	82.55	2.742	69.64	2.652	67.36	310.40	1380.74	610.75	106.88	**C1293-250-3250-S**	2.758	70.06	261.18	1161.78	531.08	92.94
C1293-250-3500-M	1.293	32.84	0.250	6.35	3.500	88.90	2.944	74.77	2.845	72.27	311.48	1385.55	559.85	97.97	**C1293-250-3500-S**	2.964	75.27	261.18	1161.78	486.83	85.19
C1293-250-3750-M	1.293	32.84	0.250	6.35	3.750	95.25	3.145	79.90	3.039	77.19	312.40	1389.62	516.79	90.44	**C1293-250-3750-S**	3.169	80.49	261.18	1161.78	449.38	78.64
C1293-250-4000-M	1.293	32.84	0.250	6.35	4.000	101.60	3.347	85.02	3.232	82.10	313.18	1393.11	479.87	83.98	**C1293-250-4000-S**	3.374	85.70	261.18	1161.78	417.28	73.02
C1293-250-4250-M	1.293	32.84	0.250	6.35	4.250	107.95	3.549	90.15	3.426	87.01	313.86	1396.13	447.88	78.38	**C1293-250-4250-S**	3.579	90.92	261.18	1161.78	389.46	68.16
C1293-250-4500-M	1.293	32.84	0.250	6.35	4.500	114.30	3.751	95.28	3.619	91.92	314.46	1398.78	419.89	73.48	**C1293-250-4500-S**	3.785	96.13	261.18	1161.78	365.12	63.90
C1293-250-4750-M	1.293	32.84	0.250	6.35	4.750	120.65	3.953	100.41	3.812	96.83	314.98	1401.11	395.19	69.16	**C1293-250-4750-S**	3.990	101.35	261.18	1161.78	343.64	60.14
C1293-250-5000-M	1.293	32.84	0.250	6.35	5.000	127.00	4.155	105.53	4.006	101.74	315.45	1403.19	373.23	65.32	**C1293-250-5000-S**	4.195	106.56	261.18	1161.78	324.55	56.80
C1293-250-5250-M	1.293	32.84	0.250	6.35	5.250	133.35	4.357	110.66	4.199	106.66	315.87	1405.04	353.59	61.88	**C1293-250-5250-S**	4.401	111.77	261.18	1161.78	307.47	53.81
C1293-250-5500-M	1.293	32.84	0.250	6.35	5.500	139.70	4.559	115.79	4.392	111.57	316.24	1406.71	335.91	58.78	**C1293-250-5500-S**	4.606	116.99	261.18	1161.78	292.10	51.12
C1293-250-5750-M	1.293	32.84	0.250	6.35	5.750	146.05	4.760	120.91	4.586	116.48	316.58	1408.23	319.92	55.99	**C1293-250-5750-S**	4.811	122.20	261.18	1161.78	278.19	48.68
C1293-250-6000-M	1.293	32.84	0.250	6.35	6.000	152.40	4.962	126.04	4.779	121.39	316.89	1409.60	305.37	53.44	**C1293-250-6000-S**	5.016	127.42	261.18	1161.78	265.54	46.47
C1293-250-6250-M	1.293	32.84	0.250	6.35	6.250	158.75	5.164	131.17	4.973	126.30	317.17	1410.86	292.10	51.12	**C1293-250-6250-S**	5.222	132.63	261.18	1161.78	254.00	44.45
C1293-250-6500-M	1.293	32.84	0.250	6.35	6.500	165.10	5.366	136.30	5.166	131.21	317.43	1412.01	279.93	48.99	**C1293-250-6500-S**	5.427	137.85	261.18	1161.78	243.41	42.60
C1293-250-6750-M	1.293	32.84	0.250	6.35	6.750	171.45	5.568	141.42	5.359	136.13	317.67	1413.06	268.73	47.03	**C1293-250-6750-S**	5.632	143.06	261.18	1161.78	233.68	40.89
C1293-250-7000-M	1.293	32.84	0.250	6.35	7.000	177.80	5.770	146.55	5.553	141.04	317.89	1414.04	258.39	45.22	**C1293-250-7000-S**	5.838	148.28	261.18	1161.78	224.69	39.32
C1293-250-7500-M	1.293	32.84	0.250	6.35	7.500	190.50	6.173	156.81	5.939	150.86	318.28	1415.79	239.94	41.99	**C1293-250-7500-S**	6.248	158.70	261.18	1161.78	208.64	36.51
C1293-250-8000-M	1.293	32.84	0.250	6.35	8.000	203.20	6.577	167.06	6.326	160.68	318.62	1417.30	223.94	39.19	**C1293-250-8000-S**	6.659	169.13	261.18	1161.78	194.73	34.08
C1293-250-8500-M	1.293	32.84	0.250	6.35	8.500	215.90	6.981	177.32	6.713	170.51	318.92	1418.62	209.94	36.74	**C1293-250-8500-S**	7.069	179.56	261.18	1161.78	182.56	31.95
C1293-250-9000-M	1.293	32.84	0.250	6.35	9.000	228.60	7.385	187.57	7.100	180.33	319.18	1419.79	197.59	34.58	**C1293-250-9000-S**	7.480	189.99	261.18	1161.78	171.82	30.07
C1293-250-9500-M	1.293	32.84	0.250	6.35	9.500	241.30	7.788	197.83	7.486	190.15	319.41	1420.83	186.62	32.66	**C1293-250-9500-S**	7.891	200.42	261.18	1161.78	162.28	28.40
C1351-105-2375-M	1.351	34.32	0.105	2.67	2.375	60.33	0.892	22.66	0.662	16.82	33.44	148.75	22.55	3.95	**C1351-105-2375-S**	1.054	26.77	25.91	115.24	19.61	3.43
C1351-105-2500-M	1.351	34.32	0.105	2.67	2.500	63.50	0.932	23.66	0.688	17.46	33.44	148.75	21.32	3.73	**C1351-105-2500-S**	1.103	28.01	25.91	115.24	18.54	3.24
C1351-105-2625-M	1.351	34.32	0.105	2.67	2.625	66.68	0.971	24.66	0.713	18.11	33.44	148.75	20.22	3.54	**C1351-105-2625-S**	1.151	29.25	25.91	115.24	17.58	3.08
C1351-105-2750-M	1.351	34.32	0.105	2.67	2.750	69.85	1.010	25.66	0.739	18.76	33.44	148.75	19.22	3.36	**C1351-105-2750-S**	1.200	30.48	25.91	115.24	16.72	2.93
C1351-105-2875-M	1.351	34.32	0.105	2.67	2.875	73.03	1.050	26.66	0.764	19.41	33.44	148.75	18.32	3.21	**C1351-105-2875-S**	1.249	31.72	25.91	115.24	15.93	2.79
C1351-105-3000-M	1.351	34.32	0.105	2.67	3.000	76.20	1.089	27.66	0.790	20.05	33.44	148.75	17.50	3.06	**C1351-105-3000-S**	1.298	32.96	25.91	115.24	15.22	2.66

Part Numbers with an "*" are squared and not ground. **Part Numbers in bold** represent the newly expanded Associated Spring RAYMOND compression spring offering.

MUSIC WIRE														
Catalog #	Outside Diameter (OD)		Wire Diameter (d)		Free Length (L) Approx		Load Length (L_1)		Solid Height (Sh) Approx		Load (P) at L_1		Spring Rate (R)	
	in	mm	in	mm	in	mm	in	mm	in	mm	lb	N	lb/in	N/mm
C1351-105-3250-M	**1.351**	**34.32**	**0.105**	**2.67**	**3.250**	**82.55**	**1.168**	**29.67**	**0.841**	**21.35**	**33.44**	**148.75**	**16.06**	**2.81**
C1351-105-3500-M	**1.351**	**34.32**	**0.105**	**2.67**	**3.500**	**88.90**	**1.247**	**31.67**	**0.892**	**22.65**	**33.44**	**148.75**	**14.84**	**2.60**
C1351-105-3750-M	**1.351**	**34.32**	**0.105**	**2.67**	**3.750**	**95.25**	**1.325**	**33.67**	**0.943**	**23.94**	**33.44**	**148.75**	**13.79**	**2.41**
C1351-105-4000-M	**1.351**	**34.32**	**0.105**	**2.67**	**4.000**	**101.60**	**1.404**	**35.67**	**0.994**	**25.24**	**33.44**	**148.75**	**12.88**	**2.25**
C1351-105-4250-M	**1.351**	**34.32**	**0.105**	**2.67**	**4.250**	**107.95**	**1.483**	**37.67**	**1.045**	**26.53**	**33.44**	**148.75**	**12.09**	**2.11**
C1351-105-4500-M	**1.351**	**34.32**	**0.105**	**2.67**	**4.500**	**114.30**	**1.562**	**39.67**	**1.095**	**27.83**	**33.44**	**148.75**	**11.38**	**1.99**
C1351-105-4750-M	**1.351**	**34.32**	**0.105**	**2.67**	**4.750**	**120.65**	**1.641**	**41.67**	**1.146**	**29.12**	**33.44**	**148.75**	**10.75**	**1.88**
C1351-105-5000-M	**1.351**	**34.32**	**0.105**	**2.67**	**5.000**	**127.00**	**1.719**	**43.67**	**1.197**	**30.42**	**33.44**	**148.75**	**10.19**	**1.78**
C1351-105-5250-M	**1.351**	**34.32**	**0.105**	**2.67**	**5.250**	**133.35**	**1.798**	**45.67**	**1.248**	**31.71**	**33.44**	**148.75**	**9.69**	**1.70**
C1351-105-5500-M	**1.351**	**34.32**	**0.105**	**2.67**	**5.500**	**139.70**	**1.877**	**47.67**	**1.299**	**33.01**	**33.44**	**148.75**	**9.23**	**1.62**
C1351-105-5750-M	**1.351**	**34.32**	**0.105**	**2.67**	**5.750**	**146.05**	**1.956**	**49.68**	**1.350**	**34.30**	**33.44**	**148.75**	**8.81**	**1.54**
C1351-105-6000-M	**1.351**	**34.32**	**0.105**	**2.67**	**6.000**	**152.40**	**2.035**	**51.68**	**1.401**	**35.60**	**33.44**	**148.75**	**8.43**	**1.48**
C1351-105-6250-M	**1.351**	**34.32**	**0.105**	**2.67**	**6.250**	**158.75**	**2.113**	**53.68**	**1.452**	**36.89**	**33.44**	**148.75**	**8.08**	**1.41**
C1351-105-6500-M	**1.351**	**34.32**	**0.105**	**2.67**	**6.500**	**165.10**	**2.192**	**55.68**	**1.503**	**38.19**	**33.44**	**148.75**	**7.76**	**1.36**
C1351-105-6750-M	**1.351**	**34.32**	**0.105**	**2.67**	**6.750**	**171.45**	**2.271**	**57.68**	**1.554**	**39.48**	**33.44**	**148.75**	**7.47**	**1.31**
C1351-105-7000-M	**1.351**	**34.32**	**0.105**	**2.67**	**7.000**	**177.80**	**2.350**	**59.68**	**1.605**	**40.78**	**33.44**	**148.75**	**7.19**	**1.26**
C1351-105-7500-M	**1.351**	**34.32**	**0.105**	**2.67**	**7.500**	**190.50**	**2.507**	**63.68**	**1.707**	**43.37**	**33.44**	**148.75**	**6.70**	**1.17**
C1351-105-8000-M	**1.351**	**34.32**	**0.105**	**2.67**	**8.000**	**203.20**	**2.665**	**67.68**	**1.809**	**45.96**	**33.44**	**148.75**	**6.27**	**1.10**
C1351-105-8500-M	**1.351**	**34.32**	**0.105**	**2.67**	**8.500**	**215.90**	**2.822**	**71.69**	**1.911**	**48.55**	**33.44**	**148.75**	**5.89**	**1.03**
C1351-105-9000-M	**1.351**	**34.32**	**0.105**	**2.67**	**9.000**	**228.60**	**2.980**	**75.69**	**2.013**	**51.14**	**33.44**	**148.75**	**5.56**	**0.97**
C1351-105-9500-M	**1.351**	**34.32**	**0.105**	**2.67**	**9.500**	**241.30**	**3.137**	**79.69**	**2.115**	**53.73**	**33.44**	**148.75**	**5.26**	**0.92**
C1351-112-2375-M	**1.351**	**34.32**	**0.112**	**2.85**	**2.375**	**60.33**	**0.950**	**24.12**	**0.733**	**18.62**	**40.02**	**178.04**	**28.08**	**4.91**
C1351-112-2500-M	**1.351**	**34.32**	**0.112**	**2.85**	**2.500**	**63.50**	**0.992**	**25.20**	**0.762**	**19.36**	**40.02**	**178.04**	**26.54**	**4.64**
C1351-112-2625-M	**1.351**	**34.32**	**0.112**	**2.85**	**2.625**	**66.68**	**1.034**	**26.27**	**0.791**	**20.09**	**40.02**	**178.04**	**25.16**	**4.40**
C1351-112-2750-M	**1.351**	**34.32**	**0.112**	**2.85**	**2.750**	**69.85**	**1.076**	**27.34**	**0.820**	**20.83**	**40.02**	**178.04**	**23.91**	**4.18**
C1351-112-2875-M	**1.351**	**34.32**	**0.112**	**2.85**	**2.875**	**73.03**	**1.119**	**28.41**	**0.849**	**21.56**	**40.02**	**178.04**	**22.79**	**3.99**
C1351-112-3000-M	**1.351**	**34.32**	**0.112**	**2.85**	**3.000**	**76.20**	**1.161**	**29.48**	**0.878**	**22.30**	**40.02**	**178.04**	**21.76**	**3.81**
C1351-112-3250-M	**1.351**	**34.32**	**0.112**	**2.85**	**3.250**	**82.55**	**1.245**	**31.62**	**0.936**	**23.77**	**40.02**	**178.04**	**19.96**	**3.49**
C1351-112-3500-M	**1.351**	**34.32**	**0.112**	**2.85**	**3.500**	**88.90**	**1.329**	**33.77**	**0.994**	**25.24**	**40.02**	**178.04**	**18.44**	**3.23**
C1351-112-3750-M	**1.351**	**34.32**	**0.112**	**2.85**	**3.750**	**95.25**	**1.414**	**35.91**	**1.052**	**26.71**	**40.02**	**178.04**	**17.13**	**3.00**
C1351-112-4000-M	**1.351**	**34.32**	**0.112**	**2.85**	**4.000**	**101.60**	**1.498**	**38.05**	**1.109**	**28.18**	**40.02**	**178.04**	**16.00**	**2.80**
C1351-112-4250-M	**1.351**	**34.32**	**0.112**	**2.85**	**4.250**	**107.95**	**1.582**	**40.19**	**1.167**	**29.65**	**40.02**	**178.04**	**15.00**	**2.63**
C1351-112-4500-M	**1.351**	**34.32**	**0.112**	**2.85**	**4.500**	**114.30**	**1.667**	**42.34**	**1.225**	**31.12**	**40.02**	**178.04**	**14.13**	**2.47**
C1351-112-4750-M	**1.351**	**34.32**	**0.112**	**2.85**	**4.750**	**120.65**	**1.751**	**44.48**	**1.283**	**32.59**	**40.02**	**178.04**	**13.35**	**2.34**
C1351-112-5000-M	**1.351**	**34.32**	**0.112**	**2.85**	**5.000**	**127.00**	**1.836**	**46.62**	**1.341**	**34.06**	**40.02**	**178.04**	**12.65**	**2.21**
C1351-112-5250-M	**1.351**	**34.32**	**0.112**	**2.85**	**5.250**	**133.35**	**1.920**	**48.76**	**1.399**	**35.53**	**40.02**	**178.04**	**12.02**	**2.10**
C1351-112-5500-M	**1.351**	**34.32**	**0.112**	**2.85**	**5.500**	**139.70**	**2.004**	**50.91**	**1.457**	**37.00**	**40.02**	**178.04**	**11.45**	**2.00**
C1351-112-5750-M	**1.351**	**34.32**	**0.112**	**2.85**	**5.750**	**146.05**	**2.089**	**53.05**	**1.515**	**38.47**	**40.02**	**178.04**	**10.93**	**1.91**
C1351-112-6000-M	**1.351**	**34.32**	**0.112**	**2.85**	**6.000**	**152.40**	**2.173**	**55.19**	**1.572**	**39.94**	**40.02**	**178.04**	**10.46**	**1.83**
C1351-112-6250-M	**1.351**	**34.32**	**0.112**	**2.85**	**6.250**	**158.75**	**2.257**	**57.34**	**1.630**	**41.41**	**40.02**	**178.04**	**10.02**	**1.75**
C1351-112-6500-M	**1.351**	**34.32**	**0.112**	**2.85**	**6.500**	**165.10**	**2.342**	**59.48**	**1.688**	**42.88**	**40.02**	**178.04**	**9.63**	**1.68**
C1351-112-6750-M	**1.351**	**34.32**	**0.112**	**2.85**	**6.750**	**171.45**	**2.426**	**61.62**	**1.746**	**44.35**	**40.02**	**178.04**	**9.26**	**1.62**
C1351-112-7000-M	**1.351**	**34.32**	**0.112**	**2.85**	**7.000**	**177.80**	**2.510**	**63.76**	**1.804**	**45.82**	**40.02**	**178.04**	**8.92**	**1.56**
C1351-112-7500-M	**1.351**	**34.32**	**0.112**	**2.85**	**7.500**	**190.50**	**2.679**	**68.05**	**1.920**	**48.76**	**40.02**	**178.04**	**8.30**	**1.45**
C1351-112-8000-M	**1.351**	**34.32**	**0.112**	**2.85**	**8.000**	**203.20**	**2.848**	**72.33**	**2.036**	**51.70**	**40.02**	**178.04**	**7.77**	**1.36**
C1351-112-8500-M	**1.351**	**34.32**	**0.112**	**2.85**	**8.500**	**215.90**	**3.016**	**76.62**	**2.151**	**54.64**	**40.02**	**178.04**	**7.30**	**1.28**
C1351-112-9000-M	**1.351**	**34.32**	**0.112**	**2.85**	**9.000**	**228.60**	**3.185**	**80.90**	**2.267**	**57.58**	**40.02**	**178.04**	**6.88**	**1.20**
C1351-112-9500-M	**1.351**	**34.32**	**0.112**	**2.85**	**9.500**	**241.30**	**3.354**	**85.19**	**2.383**	**60.52**	**40.02**	**178.04**	**6.51**	**1.14**
C1351-125-2125-M	**1.351**	**34.32**	**0.125**	**3.18**	**2.125**	**53.98**	**0.964**	**24.48**	**0.797**	**20.24**	**54.31**	**241.59**	**46.78**	**8.19**
C1351-125-2250-M	**1.351**	**34.32**	**0.125**	**3.18**	**2.250**	**57.15**	**1.011**	**25.69**	**0.833**	**21.15**	**54.31**	**241.59**	**43.85**	**7.67**
C1351-125-2375-M	**1.351**	**34.32**	**0.125**	**3.18**	**2.375**	**60.33**	**1.059**	**26.90**	**0.868**	**22.05**	**54.31**	**241.59**	**41.27**	**7.22**
C1351-125-2500-M	**1.351**	**34.32**	**0.125**	**3.18**	**2.500**	**63.50**	**1.107**	**28.11**	**0.904**	**22.96**	**54.31**	**241.59**	**38.98**	**6.82**
C1351-125-2625-M	**1.351**	**34.32**	**0.125**	**3.18**	**2.625**	**66.68**	**1.154**	**29.32**	**0.939**	**23.86**	**54.31**	**241.59**	**36.93**	**6.46**
C1351-125-2750-M	**1.351**	**34.32**	**0.125**	**3.18**	**2.750**	**69.85**	**1.202**	**30.53**	**0.975**	**24.77**	**54.31**	**241.59**	**35.08**	**6.14**
C1351-125-2875-M	**1.351**	**34.32**	**0.125**	**3.18**	**2.875**	**73.03**	**1.249**	**31.73**	**1.011**	**25.67**	**54.31**	**241.59**	**33.41**	**5.85**
C1351-125-3000-M	**1.351**	**34.32**	**0.125**	**3.18**	**3.000**	**76.20**	**1.297**	**32.94**	**1.046**	**26.58**	**54.31**	**241.59**	**31.89**	**5.58**
C1351-125-3250-M	**1.351**	**34.32**	**0.125**	**3.18**	**3.250**	**82.55**	**1.392**	**35.36**	**1.118**	**28.39**	**54.31**	**241.59**	**29.23**	**5.12**
C1351-125-3500-M	**1.351**	**34.32**	**0.125**	**3.18**	**3.500**	**88.90**	**1.487**	**37.78**	**1.189**	**30.20**	**54.31**	**241.59**	**26.99**	**4.72**
C1351-125-3750-M	**1.351**	**34.32**	**0.125**	**3.18**	**3.750**	**95.25**	**1.583**	**40.20**	**1.260**	**32.00**	**54.31**	**241.59**	**25.06**	**4.39**
C1351-125-4000-M	**1.351**	**34.32**	**0.125**	**3.18**	**4.000**	**101.60**	**1.678**	**42.61**	**1.331**	**33.81**	**54.31**	**241.59**	**23.39**	**4.09**
C1351-125-4250-M	**1.351**	**34.32**	**0.125**	**3.18**	**4.250**	**107.95**	**1.773**	**45.03**	**1.403**	**35.62**	**54.31**	**241.59**	**21.93**	**3.84**
C1351-125-4500-M	**1.351**	**34.32**	**0.125**	**3.18**	**4.500**	**114.30**	**1.868**	**47.45**	**1.474**	**37.43**	**54.31**	**241.59**	**20.64**	**3.61**
C1351-125-4750-M	**1.351**	**34.32**	**0.125**	**3.18**	**4.750**	**120.65**	**1.963**	**49.87**	**1.545**	**39.24**	**54.31**	**241.59**	**19.49**	**3.41**
C1351-125-5000-M	**1.351**	**34.32**	**0.125**	**3.18**	**5.000**	**127.00**	**2.058**	**52.28**	**1.616**	**41.05**	**54.31**	**241.59**	**18.46**	**3.23**

STAINLESS STEEL						
Catalog #	Load Length (L_1)		Load (P) at L_1		Spring Rate (R)	
	in	mm	lb	N	lb/in	N/mm
C1351-105-3250-S	**1.395**	**35.43**	**25.91**	**115.24**	**13.97**	**2.44**
C1351-105-3500-S	**1.492**	**37.91**	**25.91**	**115.24**	**12.91**	**2.26**
C1351-105-3750-S	**1.590**	**40.38**	**25.91**	**115.24**	**11.99**	**2.10**
C1351-105-4000-S	**1.687**	**42.86**	**25.91**	**115.24**	**11.20**	**1.96**
C1351-105-4250-S	**1.785**	**45.34**	**25.91**	**115.24**	**10.51**	**1.84**
C1351-105-4500-S	**1.882**	**47.81**	**25.91**	**115.24**	**9.90**	**1.73**
C1351-105-4750-S	**1.980**	**50.29**	**25.91**	**115.24**	**9.35**	**1.64**
C1351-105-5000-S	**2.077**	**52.76**	**25.91**	**115.24**	**8.86**	**1.55**
C1351-105-5250-S	**2.175**	**55.24**	**25.91**	**115.24**	**8.42**	**1.47**
C1351-105-5500-S	**2.272**	**57.71**	**25.91**	**115.24**	**8.03**	**1.40**
C1351-105-5750-S	**2.370**	**60.19**	**25.91**	**115.24**	**7.66**	**1.34**
C1351-105-6000-S	**2.467**	**62.66**	**25.91**	**115.24**	**7.33**	**1.28**
C1351-105-6250-S	**2.564**	**65.14**	**25.91**	**115.24**	**7.03**	**1.23**
C1351-105-6500-S	**2.662**	**67.61**	**25.91**	**115.24**	**6.75**	**1.18**
C1351-105-6750-S	**2.759**	**70.09**	**25.91**	**115.24**	**6.49**	**1.14**
C1351-105-7000-S	**2.857**	**72.56**	**25.91**	**115.24**	**6.25**	**1.09**
C1351-105-7500-S	**3.052**	**77.51**	**25.91**	**115.24**	**5.82**	**1.02**
C1351-105-8000-S	**3.247**	**82.47**	**25.91**	**115.24**	**5.45**	**0.95**
C1351-105-8500-S	**3.442**	**87.42**	**25.91**	**115.24**	**5.12**	**0.90**
C1351-105-9000-S	**3.636**	**92.37**	**25.91**	**115.24**	**4.83**	**0.85**
C1351-105-9500-S	**3.831**	**97.32**	**25.91**	**115.24**	**4.57**	**0.80**
C1351-112-2375-S	**1.111**	**28.23**	**30.86**	**137.25**	**24.42**	**4.27**
C1351-112-2500-S	**1.163**	**29.54**	**30.86**	**137.25**	**23.08**	**4.04**
C1351-112-2625-S	**1.215**	**30.85**	**30.86**	**137.25**	**21.88**	**3.83**
C1351-112-2750-S	**1.266**	**32.16**	**30.86**	**137.25**	**20.80**	**3.64**
C1351-112-2875-S	**1.318**	**33.47**	**30.86**	**137.25**	**19.81**	**3.47**
C1351-112-3000-S	**1.369**	**34.78**	**30.86**	**137.25**	**18.92**	**3.31**
C1351-112-3250-S	**1.473**	**37.40**	**30.86**	**137.25**	**17.36**	**3.04**
C1351-112-3500-S	**1.576**	**40.02**	**30.86**	**137.25**	**16.03**	**2.81**
C1351-112-3750-S	**1.679**	**42.64**	**30.86**	**137.25**	**14.90**	**2.61**
C1351-112-4000-S	**1.782**	**45.26**	**30.86**	**137.25**	**13.91**	**2.43**
C1351-112-4250-S	**1.885**	**47.88**	**30.86**	**137.25**	**13.05**	**2.28**
C1351-112-4500-S	**1.988**	**50.50**	**30.86**	**137.25**	**12.28**	**2.15**
C1351-112-4750-S	**2.091**	**53.12**	**30.86**	**137.25**	**11.61**	**2.03**
C1351-112-5000-S	**2.195**	**55.74**	**30.86**	**137.25**	**11.00**	**1.92**
C1351-112-5250-S	**2.298**	**58.36**	**30.86**	**137.25**	**10.45**	**1.83**
C1351-112-5500-S	**2.401**	**60.98**	**30.86**	**137.25**	**9.96**	**1.74**
C1351-112-5750-S	**2.504**	**63.60**	**30.86**	**137.25**	**9.51**	**1.66**
C1351-112-6000-S	**2.607**	**66.22**	**30.86**	**137.25**	**9.09**	**1.59**
C1351-112-6250-S	**2.710**	**68.84**	**30.86**	**137.25**	**8.72**	**1.53**
C1351-112-6500-S	**2.813**	**71.46**	**30.86**	**137.25**	**8.37**	**1.46**
C1351-112-6750-S	**2.917**	**74.08**	**30.86**	**137.25**	**8.05**	**1.41**
C1351-112-7000-S	**3.020**	**76.70**	**30.86**	**137.25**	**7.75**	**1.36**
C1351-112-7500-S	**3.226**	**81.94**	**30.86**	**137.25**	**7.22**	**1.26**
C1351-112-8000-S	**3.432**	**87.18**	**30.86**	**137.25**	**6.76**	**1.18**
C1351-112-8500-S	**3.639**	**92.42**	**30.86**	**137.25**	**6.35**	**1.11**
C1351-112-9000-S	**3.845**	**97.66**	**30.86**	**137.25**	**5.99**	**1.05**
C1351-112-9500-S	**4.051**	**102.90**	**30.86**	**137.25**	**5.66**	**0.99**
C1351-125-2125-S	**1.105**	**28.07**	**41.48**	**184.49**	**40.67**	**7.12**
C1351-125-2250-S	**1.162**	**29.52**	**41.48**	**184.49**	**38.13**	**6.67**
C1351-125-2375-S	**1.219**	**30.97**	**41.48**	**184.49**	**35.89**	**6.28**
C1351-125-2500-S	**1.276**	**32.42**	**41.48**	**184.49**	**33.90**	**5.93**
C1351-125-2625-S	**1.333**	**33.87**	**41.48**	**184.49**	**32.11**	**5.62**
C1351-125-2750-S	**1.390**	**35.32**	**41.48**	**184.49**	**30.51**	**5.34**
C1351-125-2875-S	**1.447**	**36.76**	**41.48**	**184.49**	**29.05**	**5.08**
C1351-125-3000-S	**1.504**	**38.21**	**41.48**	**184.49**	**27.73**	**4.85**
C1351-125-3250-S	**1.618**	**41.11**	**41.48**	**184.49**	**25.42**	**4.45**
C1351-125-3500-S	**1.733**	**44.01**	**41.48**	**184.49**	**23.47**	**4.11**
C1351-125-3750-S	**1.847**	**46.90**	**41.48**	**184.49**	**21.79**	**3.81**
C1351-125-4000-S	**1.961**	**49.80**	**41.48**	**184.49**	**20.34**	**3.56**
C1351-125-4250-S	**2.075**	**52.70**	**41.48**	**184.49**	**19.07**	**3.34**
C1351-125-4500-S	**2.189**	**55.59**	**41.48**	**184.49**	**17.94**	**3.14**
C1351-125-4750-S	**2.303**	**58.49**	**41.48**	**184.49**	**16.95**	**2.97**
C1351-125-5000-S	**2.417**	**61.39**	**41.48**	**184.49**	**16.06**	**2.81**

FOR INFORMATION ON ALTERNATIVE FINISHES, SEE PAGE 311

Part Numbers with an "*" are squared and not ground. **Part Numbers in bold** represent the newly expanded Associated Spring RAYMOND compression spring offering.

MUSIC WIRE

Catalog #	Outside Diameter (OD)		Wire Diameter (d)		Free Length (L) Approx		Load Length (L_1)		Solid Height (Sh) Approx		Load (P) at L_1		Spring Rate (R)	
	in	mm	in	mm	in	mm	in	mm	in	mm	lb	N	lb/in	N/mm
C1351-125-5250-M	1.351	34.32	0.125	3.18	5.250	133.35	2.154	54.70	1.688	42.86	54.31	241.59	17.54	3.07
C1351-125-5500-M	1.351	34.32	0.125	3.18	5.500	139.70	2.249	57.12	1.759	44.67	54.31	241.59	16.71	2.92
C1351-125-5750-M	1.351	34.32	0.125	3.18	5.750	146.05	2.344	59.54	1.830	46.48	54.31	241.59	15.95	2.79
C1351-125-6000-M	1.351	34.32	0.125	3.18	6.000	152.40	2.439	61.95	1.901	48.29	54.31	241.59	15.25	2.67
C1351-125-6250-M	1.351	34.32	0.125	3.18	6.250	158.75	2.534	64.37	1.973	50.10	54.31	241.59	14.62	2.56
C1351-125-6500-M	1.351	34.32	0.125	3.18	6.500	165.10	2.630	66.79	2.044	51.91	54.31	241.59	14.03	2.46
C1351-125-6750-M	1.351	34.32	0.125	3.18	6.750	171.45	2.725	69.21	2.115	53.72	54.31	241.59	13.49	2.36
C1351-125-7000-M	1.351	34.32	0.125	3.18	7.000	177.80	2.820	71.62	2.186	55.53	54.31	241.59	12.99	2.27
C1351-125-7500-M*	1.351	34.32	0.125	3.18	7.500	190.50	3.088	78.43	2.424	61.58	54.31	241.59	12.31	2.15
C1351-125-8000-M*	1.351	34.32	0.125	3.18	8.000	203.20	3.278	83.26	2.567	65.20	54.31	241.59	11.50	2.01
C1351-125-8500-M*	1.351	34.32	0.125	3.18	8.500	215.90	3.468	88.10	2.709	68.82	54.31	241.59	10.79	1.89
C1351-125-9000-M*	1.351	34.32	0.125	3.18	9.000	228.60	3.659	92.93	2.852	72.44	54.31	241.59	10.17	1.78
C1351-125-9500-M*	1.351	34.32	0.125	3.18	9.500	241.30	3.849	97.77	2.994	76.06	54.31	241.59	9.61	1.68
C1351-135-2125-M	1.351	34.32	0.135	3.43	2.125	53.98	1.040	26.42	0.891	22.63	67.24	299.08	61.97	10.84
C1351-135-2250-M	1.351	34.32	0.135	3.43	2.250	57.15	1.092	27.73	0.932	23.67	67.24	299.08	58.06	10.16
C1351-135-2375-M	1.351	34.32	0.135	3.43	2.375	60.33	1.144	29.05	0.973	24.71	67.24	299.08	54.61	9.56
C1351-135-2500-M	1.351	34.32	0.135	3.43	2.500	63.50	1.196	30.37	1.014	25.75	67.24	299.08	51.55	9.02
C1351-135-2625-M	1.351	34.32	0.135	3.43	2.625	66.68	1.248	31.69	1.055	26.79	67.24	299.08	48.81	8.54
C1351-135-2750-M	1.351	34.32	0.135	3.43	2.750	69.85	1.299	33.00	1.096	27.83	67.24	299.08	46.35	8.11
C1351-135-2875-M	1.351	34.32	0.135	3.43	2.875	73.03	1.351	34.32	1.137	28.87	67.24	299.08	44.13	7.72
C1351-135-3000-M	1.351	34.32	0.135	3.43	3.000	76.20	1.403	35.64	1.177	29.91	67.24	299.08	42.11	7.37
C1351-135-3250-M	1.351	34.32	0.135	3.43	3.250	82.55	1.507	38.28	1.259	31.99	67.24	299.08	38.57	6.75
C1351-135-3500-M	1.351	34.32	0.135	3.43	3.500	88.90	1.611	40.91	1.341	34.07	67.24	299.08	35.59	6.23
C1351-135-3750-M	1.351	34.32	0.135	3.43	3.750	95.25	1.714	43.55	1.423	36.15	67.24	299.08	33.03	5.78
C1351-135-4000-M	1.351	34.32	0.135	3.43	4.000	101.60	1.818	46.18	1.505	38.22	67.24	299.08	30.82	5.39
C1351-135-4250-M	1.351	34.32	0.135	3.43	4.250	107.95	1.922	48.82	1.587	40.30	67.24	299.08	28.88	5.05
C1351-135-4500-M	1.351	34.32	0.135	3.43	4.500	114.30	2.026	51.46	1.669	42.38	67.24	299.08	27.18	4.76
C1351-135-4750-M	1.351	34.32	0.135	3.43	4.750	120.65	2.130	54.09	1.751	44.46	67.24	299.08	25.66	4.49
C1351-135-5000-M	1.351	34.32	0.135	3.43	5.000	127.00	2.233	56.73	1.832	46.54	67.24	299.08	24.30	4.25
C1351-135-5250-M	1.351	34.32	0.135	3.43	5.250	133.35	2.337	59.36	1.914	48.62	67.24	299.08	23.08	4.04
C1351-135-5500-M	1.351	34.32	0.135	3.43	5.500	139.70	2.441	62.00	1.996	50.70	67.24	299.08	21.98	3.85
C1351-135-5750-M	1.351	34.32	0.135	3.43	5.750	146.05	2.545	64.63	2.078	52.78	67.24	299.08	20.98	3.67
C1351-135-6000-M	1.351	34.32	0.135	3.43	6.000	152.40	2.648	67.27	2.160	54.86	67.24	299.08	20.06	3.51
C1351-135-6250-M	1.351	34.32	0.135	3.43	6.250	158.75	2.752	69.91	2.242	56.94	67.24	299.08	19.22	3.36
C1351-135-6500-M	1.351	34.32	0.135	3.43	6.500	165.10	2.856	72.54	2.324	59.02	67.24	299.08	18.45	3.23
C1351-135-6750-M*	1.351	34.32	0.135	3.43	6.750	171.45	3.039	77.18	2.503	63.58	67.24	299.08	18.12	3.17
C1351-135-7000-M*	1.351	34.32	0.135	3.43	7.000	177.80	3.142	79.82	2.585	65.65	67.24	299.08	17.43	3.05
C1351-135-7500-M*	1.351	34.32	0.135	3.43	7.500	190.50	3.350	85.09	2.749	69.81	67.24	299.08	16.20	2.84
C1351-135-8000-M*	1.351	34.32	0.135	3.43	8.000	203.20	3.558	90.36	2.912	73.97	67.24	299.08	15.14	2.65
C1351-135-8500-M*	1.351	34.32	0.135	3.43	8.500	215.90	3.765	95.63	3.076	78.13	67.24	299.08	14.20	2.49
C1351-135-9000-M*	1.351	34.32	0.135	3.43	9.000	228.60	3.973	100.91	3.240	82.29	67.24	299.08	13.37	2.34
C1351-135-9500-M*	1.351	34.32	0.135	3.43	9.500	241.30	4.180	106.18	3.403	86.45	67.24	299.08	12.64	2.21
C1351-148-2000-M	1.351	34.32	0.148	3.76	2.000	50.80	1.080	27.44	0.964	24.48	86.71	385.72	94.28	16.50
C1351-148-2125-M	1.351	34.32	0.148	3.76	2.125	53.98	1.138	28.90	1.012	25.70	86.71	385.72	87.83	15.37
C1351-148-2250-M	1.351	34.32	0.148	3.76	2.250	57.15	1.195	30.36	1.060	26.91	86.71	385.72	82.21	14.39
C1351-148-2375-M	1.351	34.32	0.148	3.76	2.375	60.33	1.253	31.82	1.107	28.13	86.71	385.72	77.27	13.52
C1351-148-2500-M	1.351	34.32	0.148	3.76	2.500	63.50	1.310	33.28	1.155	29.35	86.71	385.72	72.89	12.76
C1351-148-2625-M	1.351	34.32	0.148	3.76	2.625	66.68	1.368	34.74	1.203	30.56	86.71	385.72	68.98	12.07
C1351-148-2750-M	1.351	34.32	0.148	3.76	2.750	69.85	1.425	36.20	1.251	31.78	86.71	385.72	65.46	11.46
C1351-148-2875-M	1.351	34.32	0.148	3.76	2.875	73.03	1.483	37.67	1.299	33.00	86.71	385.72	62.29	10.90
C1351-148-3000-M	1.351	34.32	0.148	3.76	3.000	76.20	1.540	39.13	1.347	34.21	86.71	385.72	59.41	10.40
C1351-148-3250-M	1.351	34.32	0.148	3.76	3.250	82.55	1.655	42.05	1.443	36.65	86.71	385.72	54.38	9.52
C1351-148-3500-M	1.351	34.32	0.148	3.76	3.500	88.90	1.771	44.97	1.539	39.08	86.71	385.72	50.14	8.77
C1351-148-3750-M	1.351	34.32	0.148	3.76	3.750	95.25	1.886	47.89	1.634	41.51	86.71	385.72	46.51	8.14
C1351-148-4000-M	1.351	34.32	0.148	3.76	4.000	101.60	2.001	50.82	1.730	43.95	86.71	385.72	43.37	7.59
C1351-148-4250-M	1.351	34.32	0.148	3.76	4.250	107.95	2.116	53.74	1.826	46.38	86.71	385.72	40.63	7.11
C1351-148-4500-M	1.351	34.32	0.148	3.76	4.500	114.30	2.231	56.66	1.922	48.81	86.71	385.72	38.21	6.69
C1351-148-4750-M	1.351	34.32	0.148	3.76	4.750	120.65	2.346	59.58	2.018	51.25	86.71	385.72	36.07	6.31
C1351-148-5000-M	1.351	34.32	0.148	3.76	5.000	127.00	2.461	62.51	2.113	53.68	86.71	385.72	34.15	5.98
C1351-148-5250-M	1.351	34.32	0.148	3.76	5.250	133.35	2.576	65.43	2.209	56.11	86.71	385.72	32.43	5.67
C1351-148-5500-M	1.351	34.32	0.148	3.76	5.500	139.70	2.691	68.35	2.305	58.55	86.71	385.72	30.87	5.40
C1351-148-5750-M	1.351	34.32	0.148	3.76	5.750	146.05	2.806	71.27	2.401	60.98	86.71	385.72	29.46	5.15
C1351-148-6000-M	1.351	34.32	0.148	3.76	6.000	152.40	2.921	74.20	2.497	63.41	86.71	385.72	28.16	4.93
C1351-148-6250-M	1.351	34.32	0.148	3.76	6.250	158.75	3.036	77.12	2.592	65.85	86.71	385.72	26.98	4.72

STAINLESS STEEL

Catalog #	Load Length (L_1)		Load (P) at L_1		Spring Rate (R)	
	in	mm	lb	N	lb/in	N/mm
C1351-125-5250-S	2.531	64.28	41.48	184.49	15.25	2.67
C1351-125-5500-S	2.645	67.18	41.48	184.49	14.53	2.54
C1351-125-5750-S	2.759	70.08	41.48	184.49	13.87	2.43
C1351-125-6000-S	2.873	72.97	41.48	184.49	13.26	2.32
C1351-125-6250-S	2.987	75.87	41.48	184.49	12.71	2.22
C1351-125-6500-S	3.101	78.77	41.48	184.49	12.20	2.14
C1351-125-6750-S	3.215	81.66	41.48	184.49	11.73	2.05
C1351-125-7000-S	3.329	84.56	41.48	184.49	11.30	1.98
C1351-125-7500-S*	3.625	92.08	41.48	184.49	10.70	1.87
C1351-125-8000-S*	3.853	97.87	41.48	184.49	10.00	1.75
C1351-125-8500-S*	4.081	103.66	41.48	184.49	9.39	1.64
C1351-125-9000-S*	4.309	109.46	41.48	184.49	8.84	1.55
C1351-125-9500-S*	4.537	115.25	41.48	184.49	8.36	1.46
C1351-135-2125-S	1.179	29.95	50.96	226.69	53.89	9.43
C1351-135-2250-S	1.241	31.51	50.96	226.69	50.48	8.83
C1351-135-2375-S	1.302	33.07	50.96	226.69	47.49	8.31
C1351-135-2500-S	1.363	34.62	50.96	226.69	44.82	7.84
C1351-135-2625-S	1.424	36.18	50.96	226.69	42.45	7.43
C1351-135-2750-S	1.486	37.73	50.96	226.69	40.31	7.05
C1351-135-2875-S	1.547	39.29	50.96	226.69	38.37	6.71
C1351-135-3000-S	1.608	40.85	50.96	226.69	36.61	6.41
C1351-135-3250-S	1.731	43.96	50.96	226.69	33.54	5.87
C1351-135-3500-S	1.853	47.07	50.96	226.69	30.95	5.42
C1351-135-3750-S	1.976	50.18	50.96	226.69	28.72	5.03
C1351-135-4000-S	2.098	53.30	50.96	226.69	26.80	4.69
C1351-135-4250-S	2.221	56.41	50.96	226.69	25.12	4.40
C1351-135-4500-S	2.343	59.52	50.96	226.69	23.63	4.14
C1351-135-4750-S	2.466	62.63	50.96	226.69	22.31	3.90
C1351-135-5000-S	2.588	65.75	50.96	226.69	21.13	3.70
C1351-135-5250-S	2.711	68.86	50.96	226.69	20.07	3.51
C1351-135-5500-S	2.834	71.97	50.96	226.69	19.11	3.34
C1351-135-5750-S	2.956	75.09	50.96	226.69	18.24	3.19
C1351-135-6000-S	3.079	78.20	50.96	226.69	17.45	3.05
C1351-135-6250-S	3.201	81.31	50.96	226.69	16.72	2.93
C1351-135-6500-S	3.324	84.42	50.96	226.69	16.05	2.81
C1351-135-6750-S*	3.515	89.28	50.96	226.69	15.75	2.76
C1351-135-7000-S*	3.638	92.40	50.96	226.69	15.16	2.65
C1351-135-7500-S*	3.883	98.62	50.96	226.69	14.09	2.47
C1351-135-8000-S*	4.128	104.85	50.96	226.69	13.16	2.30
C1351-135-8500-S*	4.373	111.07	50.96	226.69	12.35	2.16
C1351-135-9000-S*	4.618	117.30	50.96	226.69	11.63	2.04
C1351-135-9500-S*	4.863	123.52	50.96	226.69	10.99	1.92
C1351-148-2000-S	1.206	30.64	65.08	289.48	81.98	14.35
C1351-148-2125-S	1.273	32.33	65.08	289.48	76.38	13.37
C1351-148-2250-S	1.340	34.03	65.08	289.48	71.49	12.51
C1351-148-2375-S	1.406	35.72	65.08	289.48	67.19	11.76
C1351-148-2500-S	1.473	37.42	65.08	289.48	63.38	11.09
C1351-148-2625-S	1.540	39.12	65.08	289.48	59.98	10.50
C1351-148-2750-S	1.607	40.81	65.08	289.48	56.92	9.96
C1351-148-2875-S	1.674	42.51	65.08	289.48	54.17	9.48
C1351-148-3000-S	1.740	44.20	65.08	289.48	51.66	9.04
C1351-148-3250-S	1.874	47.60	65.08	289.48	47.29	8.28
C1351-148-3500-S	2.007	50.99	65.08	289.48	43.60	7.63
C1351-148-3750-S	2.141	54.38	65.08	289.48	40.44	7.08
C1351-148-4000-S	2.274	57.77	65.08	289.48	37.71	6.60
C1351-148-4250-S	2.408	61.16	65.08	289.48	35.33	6.18
C1351-148-4500-S	2.542	64.55	65.08	289.48	33.23	5.81
C1351-148-4750-S	2.675	67.95	65.08	289.48	31.36	5.49
C1351-148-5000-S	2.809	71.34	65.08	289.48	29.70	5.20
C1351-148-5250-S	2.942	74.73	65.08	289.48	28.20	4.93
C1351-148-5500-S	3.076	78.12	65.08	289.48	26.84	4.70
C1351-148-5750-S	3.209	81.51	65.08	289.48	25.61	4.48
C1351-148-6000-S	3.343	84.90	65.08	289.48	24.49	4.29
C1351-148-6250-S	3.476	88.30	65.08	289.48	23.46	4.11

Part Numbers with an "*" are squared and not ground. **Part Numbers in bold** represent the newly expanded Associated Spring RAYMOND compression spring offering.

MUSIC WIRE															STAINLESS STEEL					
Catalog #	Outside Diameter (OD)		Wire Diameter (d)		Free Length (L) Approx		Load Length (L_1)		Solid Height (Sh) Approx		Load (P) at L_1		Spring Rate (R)		Catalog #	Load Length (L_1)		Load (P) at L_1		Spring Rate (R)	
	in	mm	in	mm	in	mm	in	mm	in	mm	lb	N	lb/in	N/mm		in	mm	lb	N	lb/in	N/mm
C1351-148-6500-M	1.351	34.32	0.148	3.76	6.500	165.10	3.151	80.04	2.688	68.28	86.71	385.72	25.89	4.53	**C1351-148-6500-S**	3.610	91.69	65.08	289.48	22.52	3.94
C1351-148-6750-M	1.351	34.32	0.148	3.76	6.750	171.45	3.266	82.96	2.784	70.71	86.71	385.72	24.89	4.36	**C1351-148-6750-S**	3.743	95.08	65.08	289.48	21.64	3.79
C1351-148-7000-M	1.351	34.32	0.148	3.76	7.000	177.80	3.381	85.89	2.880	73.15	86.71	385.72	23.96	4.19	**C1351-148-7000-S**	3.877	98.47	65.08	289.48	20.84	3.65
C1351-148-7500-M	1.351	34.32	0.148	3.76	7.500	190.50	3.611	91.73	3.071	78.01	86.71	385.72	22.30	3.90	**C1351-148-7500-S**	4.144	105.26	65.08	289.48	19.39	3.39
C1351-148-8000-M	1.351	34.32	0.148	3.76	8.000	203.20	3.842	97.57	3.263	82.88	86.71	385.72	20.85	3.65	**C1351-148-8000-S**	4.411	112.04	65.08	289.48	18.13	3.17
C1351-148-8500-M*	1.351	34.32	0.148	3.76	8.500	215.90	4.152	105.45	3.553	90.26	86.71	385.72	19.94	3.49	**C1351-148-8500-S***	4.747	120.57	65.08	289.48	17.34	3.03
C1351-148-9000-M*	1.351	34.32	0.148	3.76	9.000	228.60	4.382	111.29	3.745	95.12	86.71	385.72	18.78	3.29	**C1351-148-9000-S***	5.014	127.36	65.08	289.48	16.33	2.86
C1351-148-9500-M*	1.351	34.32	0.148	3.76	9.500	241.30	4.612	117.14	3.937	99.99	86.71	385.72	17.74	3.10	**C1351-148-9500-S***	5.281	134.14	65.08	289.48	15.43	2.70
C1351-162-1875-M	1.351	34.32	0.162	4.12	1.875	47.63	1.112	28.26	1.027	26.08	111.27	494.96	145.92	25.54	**C1351-162-1875-S**	1.224	31.09	82.61	367.49	126.89	22.21
C1351-162-2000-M	1.351	34.32	0.162	4.12	2.000	50.80	1.176	29.87	1.082	27.49	111.27	494.96	135.04	23.63	**C1351-162-2000-S**	1.296	32.93	82.61	367.49	117.43	20.55
C1351-162-2125-M	1.351	34.32	0.162	4.12	2.125	53.98	1.240	31.48	1.137	28.89	111.27	494.96	125.67	21.99	**C1351-162-2125-S**	1.369	34.77	82.61	367.49	109.28	19.12
C1351-162-2250-M	1.351	34.32	0.162	4.12	2.250	57.15	1.303	33.10	1.193	30.30	111.27	494.96	117.51	20.56	**C1351-162-2250-S**	1.442	36.61	82.61	367.49	102.18	17.88
C1351-162-2375-M	1.351	34.32	0.162	4.12	2.375	60.33	1.367	34.71	1.248	31.70	111.27	494.96	110.35	19.31	**C1351-162-2375-S**	1.514	38.46	82.61	367.49	95.96	16.79
C1351-162-2500-M	1.351	34.32	0.162	4.12	2.500	63.50	1.430	36.33	1.303	33.11	111.27	494.96	104.01	18.20	**C1351-162-2500-S**	1.587	40.30	82.61	367.49	90.44	15.83
C1351-162-2625-M	1.351	34.32	0.162	4.12	2.625	66.68	1.494	37.94	1.359	34.51	111.27	494.96	98.36	17.21	**C1351-162-2625-S**	1.659	42.14	82.61	367.49	85.53	14.97
C1351-162-2750-M	1.351	34.32	0.162	4.12	2.750	69.85	1.557	39.56	1.414	35.92	111.27	494.96	93.29	16.33	**C1351-162-2750-S**	1.732	43.98	82.61	367.49	81.12	14.20
C1351-162-2875-M	1.351	34.32	0.162	4.12	2.875	73.03	1.621	41.17	1.469	37.32	111.27	494.96	88.72	15.53	**C1351-162-2875-S**	1.804	45.83	82.61	367.49	77.15	13.50
C1351-162-3000-M	1.351	34.32	0.162	4.12	3.000	76.20	1.684	42.78	1.525	38.73	111.27	494.96	84.58	14.80	**C1351-162-3000-S**	1.877	47.67	82.61	367.49	73.55	12.87
C1351-162-3250-M	1.351	34.32	0.162	4.12	3.250	82.55	1.811	46.01	1.635	41.54	111.27	494.96	77.35	13.54	**C1351-162-3250-S**	2.022	51.35	82.61	367.49	67.26	11.77
C1351-162-3500-M	1.351	34.32	0.162	4.12	3.500	88.90	1.939	49.24	1.746	44.35	111.27	494.96	71.26	12.47	**C1351-162-3500-S**	2.167	55.04	82.61	367.49	61.97	10.84
C1351-162-3750-M	1.351	34.32	0.162	4.12	3.750	95.25	2.066	52.47	1.857	47.16	111.27	494.96	66.06	11.56	**C1351-162-3750-S**	2.312	58.72	82.61	367.49	57.45	10.05
C1351-162-4000-M	1.351	34.32	0.162	4.12	4.000	101.60	2.193	55.70	1.967	49.97	111.27	494.96	61.57	10.77	**C1351-162-4000-S**	2.457	62.41	82.61	367.49	53.54	9.37
C1351-162-4250-M	1.351	34.32	0.162	4.12	4.250	107.95	2.320	58.92	2.078	52.79	111.27	494.96	57.65	10.09	**C1351-162-4250-S**	2.602	66.09	82.61	367.49	50.13	8.77
C1351-162-4500-M	1.351	34.32	0.162	4.12	4.500	114.30	2.447	62.15	2.189	55.60	111.27	494.96	54.20	9.48	**C1351-162-4500-S**	2.747	69.77	82.61	367.49	47.13	8.25
C1351-162-4750-M	1.351	34.32	0.162	4.12	4.750	120.65	2.574	65.38	2.300	58.41	111.27	494.96	51.14	8.95	**C1351-162-4750-S**	2.892	73.46	82.61	367.49	44.47	7.78
C1351-162-5000-M	1.351	34.32	0.162	4.12	5.000	127.00	2.701	68.61	2.410	61.22	111.27	494.96	48.40	8.47	**C1351-162-5000-S**	3.037	77.14	82.61	367.49	42.09	7.37
C1351-162-5250-M	1.351	34.32	0.162	4.12	5.250	133.35	2.828	71.84	2.521	64.03	111.27	494.96	45.95	8.04	**C1351-162-5250-S**	3.182	80.83	82.61	367.49	39.95	6.99
C1351-162-5500-M	1.351	34.32	0.162	4.12	5.500	139.70	2.955	75.06	2.632	66.84	111.27	494.96	43.73	7.65	**C1351-162-5500-S**	3.327	84.51	82.61	367.49	38.02	6.65
C1351-162-5750-M	1.351	34.32	0.162	4.12	5.750	146.05	3.082	78.29	2.742	69.65	111.27	494.96	41.71	7.30	**C1351-162-5750-S**	3.472	88.20	82.61	367.49	36.27	6.35
C1351-162-6000-M	1.351	34.32	0.162	4.12	6.000	152.40	3.209	81.52	2.853	72.46	111.27	494.96	39.87	6.98	**C1351-162-6000-S**	3.617	91.88	82.61	367.49	34.67	6.07
C1351-162-6250-M	1.351	34.32	0.162	4.12	6.250	158.75	3.337	84.75	2.964	75.27	111.27	494.96	38.19	6.68	**C1351-162-6250-S**	3.762	95.56	82.61	367.49	33.21	5.81
C1351-162-6500-M	1.351	34.32	0.162	4.12	6.500	165.10	3.464	87.98	3.074	78.08	111.27	494.96	36.65	6.41	**C1351-162-6500-S**	3.907	99.25	82.61	367.49	31.87	5.58
C1351-162-6750-M	1.351	34.32	0.162	4.12	6.750	171.45	3.591	91.20	3.185	80.90	111.27	494.96	35.22	6.16	**C1351-162-6750-S**	4.052	102.93	82.61	367.49	30.63	5.36
C1351-162-7000-M	1.351	34.32	0.162	4.12	7.000	177.80	3.718	94.43	3.296	83.71	111.27	494.96	33.90	5.93	**C1351-162-7000-S**	4.198	106.62	82.61	367.49	29.48	5.16
C1351-162-7500-M	1.351	34.32	0.162	4.12	7.500	190.50	3.972	100.89	3.517	89.33	111.27	494.96	31.54	5.52	**C1351-162-7500-S**	4.488	113.99	82.61	367.49	27.43	4.80
C1351-162-8000-M	1.351	34.32	0.162	4.12	8.000	203.20	4.226	107.35	3.738	94.95	111.27	494.96	29.49	5.16	**C1351-162-8000-S**	4.778	121.36	82.61	367.49	25.64	4.49
C1351-162-8500-M	1.351	34.32	0.162	4.12	8.500	215.90	4.480	113.80	3.960	100.57	111.27	494.96	27.68	4.84	**C1351-162-8500-S**	5.068	128.72	82.61	367.49	24.07	4.21
C1351-162-9000-M	1.351	34.32	0.162	4.12	9.000	228.60	4.735	120.26	4.181	106.20	111.27	494.96	26.09	4.57	**C1351-162-9000-S**	5.358	136.09	82.61	367.49	22.68	3.97
C1351-162-9500-M	1.351	34.32	0.162	4.12	9.500	241.30	4.989	126.71	4.402	111.82	111.27	494.96	24.67	4.32	**C1351-162-9500-S**	5.648	143.46	82.61	367.49	21.45	3.75
C1351-177-1875-M	1.351	34.32	0.177	4.50	1.875	47.63	1.203	30.56	1.139	28.92	141.94	631.39	211.26	36.97	**C1351-177-1875-S**	1.308	33.22	104.18	463.41	183.71	32.15
C1351-177-2000-M	1.351	34.32	0.177	4.50	2.000	50.80	1.273	32.33	1.202	30.53	141.94	631.39	195.22	34.16	**C1351-177-2000-S**	1.386	35.21	104.18	463.41	169.75	29.71
C1351-177-2125-M	1.351	34.32	0.177	4.50	2.125	53.98	1.343	34.10	1.265	32.13	141.94	631.39	181.44	31.75	**C1351-177-2125-S**	1.465	37.20	104.18	463.41	157.77	27.61
C1351-177-2250-M	1.351	34.32	0.177	4.50	2.250	57.15	1.412	35.88	1.328	33.73	141.94	631.39	169.48	29.66	**C1351-177-2250-S**	1.543	39.19	104.18	463.41	147.37	25.79
C1351-177-2375-M	1.351	34.32	0.177	4.50	2.375	60.33	1.482	37.65	1.391	35.33	141.94	631.39	158.99	27.82	**C1351-177-2375-S**	1.621	41.19	104.18	463.41	138.26	24.19
C1351-177-2500-M	1.351	34.32	0.177	4.50	2.500	63.50	1.552	39.42	1.454	36.93	141.94	631.39	149.73	26.20	**C1351-177-2500-S**	1.700	43.18	104.18	463.41	130.20	22.79
C1351-177-2625-M	1.351	34.32	0.177	4.50	2.625	66.68	1.622	41.19	1.517	38.53	141.94	631.39	141.49	24.76	**C1351-177-2625-S**	1.778	45.17	104.18	463.41	123.04	21.53
C1351-177-2750-M	1.351	34.32	0.177	4.50	2.750	69.85	1.692	42.97	1.580	40.13	141.94	631.39	134.11	23.47	**C1351-177-2750-S**	1.857	47.16	104.18	463.41	116.62	20.41
C1351-177-2875-M	1.351	34.32	0.177	4.50	2.875	73.03	1.761	44.74	1.643	41.73	141.94	631.39	127.46	22.31	**C1351-177-2875-S**	1.935	49.15	104.18	463.41	110.84	19.40
C1351-177-3000-M	1.351	34.32	0.177	4.50	3.000	76.20	1.831	46.51	1.706	43.34	141.94	631.39	121.44	21.25	**C1351-177-3000-S**	2.013	51.14	104.18	463.41	105.60	18.48
C1351-177-3250-M	1.351	34.32	0.177	4.50	3.250	82.55	1.971	50.06	1.832	46.54	141.94	631.39	110.96	19.42	**C1351-177-3250-S**	2.170	55.12	104.18	463.41	96.48	16.88
C1351-177-3500-M	1.351	34.32	0.177	4.50	3.500	88.90	2.110	53.60	1.958	49.74	141.94	631.39	102.14	17.87	**C1351-177-3500-S**	2.327	59.11	104.18	463.41	88.82	15.54
C1351-177-3750-M	1.351	34.32	0.177	4.50	3.750	95.25	2.250	57.15	2.084	52.94	141.94	631.39	94.62	16.56	**C1351-177-3750-S**	2.484	63.09	104.18	463.41	82.28	14.40
C1351-177-4000-M	1.351	34.32	0.177	4.50	4.000	101.60	2.389	60.69	2.210	56.15	141.94	631.39	88.13	15.42	**C1351-177-4000-S**	2.641	67.07	104.18	463.41	76.64	13.41
C1351-177-4250-M	1.351	34.32	0.177	4.50	4.250	107.95	2.529	64.24	2.337	59.35	141.94	631.39	82.48	14.43	**C1351-177-4250-S**	2.797	71.05	104.18	463.41	71.72	12.55
C1351-177-4500-M	1.351	34.32	0.177	4.50	4.500	114.30	2.669	67.78	2.463	62.55	141.94	631.39	77.50	13.56	**C1351-177-4500-S**	2.954	75.04	104.18	463.41	67.39	11.79
C1351-177-4750-M	1.351	34.32	0.177	4.50	4.750	120.65	2.808	71.33	2.589	65.75	141.94	631.39	73.10	12.79	**C1351-177-4750-S**	3.111	79.02	104.18	463.41	63.56	11.12
C1351-177-5000-M	1.351	34.32	0.177	4.50	5.000	127.00	2.948	74.87	2.715	68.96	141.94	631.39	69.16	12.10	**C1351-177-5000-S**	3.268	83.00	104.18	463.41	60.14	10.52
C1351-177-5250-M	1.351	34.32	0.177	4.50	5.250	133.35	3.087	78.42	2.841	72.16	141.94	631.39	65.63	11.49	**C1351-177-5250-S**	3.425	86.98	104.18	463.41	57.07	9.99
C1351-177-5500-M	1.351	34.32	0.177	4.50	5.500	139.70	3.227	81.96	2.967	75.36	141.94	631.39	62.44	10.93	**C1351-177-5500-S**	3.581	90.97	104.18	463.41	54.30	9.50
C1351-177-5750-M	1.351	34.32	0.177	4.50	5.750	146.05	3.366	85.51	3.093	78.56	141.94	631.39	59.55	10.42	**C1351-177-5750-S**	3.738	94.95	104.18	463.41	51.78	9.06
C1351-177-6000-M	1.351	34.32	0.177	4.50	6.000	152.40	3.506	89.05	3.219	81.77	141.94	631.39	56.91	9.96	**C1351-177-6000-S**	3.895	98.93	104.18	463.41	49.49	8.66
C1351-177-6250-M	1.351	34.32	0.177	4.50	6.250	158.75	3.646	92.60	3.345	84.97	141.94	631.39	54.50	9.54	**C1351-177-6250-S**	4.052	102.91	104.18	463.41	47.39	8.29
C1351-177-6500-M	1.351	34.32	0.177	4.50	6.500	165.10	3.785	96.14	3.471	88.17	141.94	631.39	52.28	9.15	**C1351-177-6500-S**	4.209	106.90	104.18	463.41	45.46	7.96
C1351-177-6750-M	1.351	34.32	0.177	4.50	6.750	171.45	3.925	99.69	3.597	91.37	141.94	631.39	50.24	8.79	**C1351-177-6750-S**	4.365	110.88	104.18	463.41	43.69	7.65

FOR INFORMATION ON ALTERNATIVE FINISHES, SEE PAGE 311

Part Numbers with an "*" are squared and not ground. **Part Numbers in bold** represent the newly expanded Associated Spring RAYMOND compression spring offering.

| MUSIC WIRE | | |

MUSIC WIRE														
Catalog #	Outside Diameter (OD)		Wire Diameter (d)		Free Length (L) Approx		Load Length (L_1)		Solid Height (Sh) Approx		Load (P) at L_1		Spring Rate (R)	
	in	mm	in	mm	in	mm	in	mm	in	mm	lb	N	lb/in	N/mm
C1351-207-8000-M	**1.351**	**34.32**	**0.207**	**5.26**	**8.000**	**203.20**	**5.340**	**135.65**	**5.115**	**129.91**	**217.73**	**968.52**	**81.87**	**14.33**
C1351-207-8500-M	**1.351**	**34.32**	**0.207**	**5.26**	**8.500**	**215.90**	**5.665**	**143.90**	**5.423**	**137.75**	**217.73**	**968.52**	**76.81**	**13.44**
C1351-207-9000-M	**1.351**	**34.32**	**0.207**	**5.26**	**9.000**	**228.60**	**5.990**	**152.14**	**5.732**	**145.58**	**217.73**	**968.52**	**72.33**	**12.66**
C1351-207-9500-M	**1.351**	**34.32**	**0.207**	**5.26**	**9.500**	**241.30**	**6.315**	**160.39**	**6.040**	**153.42**	**217.73**	**968.52**	**68.35**	**11.96**
C1351-225-1875-M	**1.351**	**34.32**	**0.225**	**5.72**	**1.875**	**47.63**	**1.444**	**36.67**	**1.436**	**36.47**	**272.97**	**1214.25**	**632.83**	**110.75**
C1351-225-2000-M	**1.351**	**34.32**	**0.225**	**5.72**	**2.000**	**50.80**	**1.531**	**38.88**	**1.520**	**38.62**	**272.97**	**1214.25**	**581.80**	**101.81**
C1351-225-2125-M	**1.351**	**34.32**	**0.225**	**5.72**	**2.125**	**53.98**	**1.618**	**41.10**	**1.605**	**40.76**	**272.97**	**1214.25**	**538.38**	**94.22**
C1351-225-2250-M	**1.351**	**34.32**	**0.225**	**5.72**	**2.250**	**57.15**	**1.705**	**43.31**	**1.689**	**42.91**	**272.97**	**1214.25**	**500.99**	**87.67**
C1351-225-2375-M	**1.351**	**34.32**	**0.225**	**5.72**	**2.375**	**60.33**	**1.792**	**45.52**	**1.774**	**45.06**	**272.97**	**1214.25**	**468.46**	**81.98**
C1351-225-2500-M	**1.351**	**34.32**	**0.225**	**5.72**	**2.500**	**63.50**	**1.879**	**47.74**	**1.858**	**47.20**	**272.97**	**1214.25**	**439.89**	**76.98**
C1351-225-2625-M	**1.351**	**34.32**	**0.225**	**5.72**	**2.625**	**66.68**	**1.967**	**49.95**	**1.943**	**49.35**	**272.97**	**1214.25**	**414.61**	**72.56**
C1351-225-2750-M	**1.351**	**34.32**	**0.225**	**5.72**	**2.750**	**69.85**	**2.054**	**52.17**	**2.027**	**51.50**	**272.97**	**1214.25**	**392.08**	**68.61**
C1351-225-2875-M	**1.351**	**34.32**	**0.225**	**5.72**	**2.875**	**73.03**	**2.141**	**54.38**	**2.112**	**53.64**	**272.97**	**1214.25**	**371.87**	**65.08**
C1351-225-3000-M	**1.351**	**34.32**	**0.225**	**5.72**	**3.000**	**76.20**	**2.228**	**56.59**	**2.196**	**55.79**	**272.97**	**1214.25**	**353.64**	**61.89**
C1351-225-3250-M	**1.351**	**34.32**	**0.225**	**5.72**	**3.250**	**82.55**	**2.402**	**61.02**	**2.365**	**60.08**	**272.97**	**1214.25**	**322.07**	**56.36**
C1351-225-3500-M	**1.351**	**34.32**	**0.225**	**5.72**	**3.500**	**88.90**	**2.577**	**65.45**	**2.535**	**64.38**	**272.97**	**1214.25**	**295.67**	**51.74**
C1351-225-3750-M	**1.351**	**34.32**	**0.225**	**5.72**	**3.750**	**95.25**	**2.751**	**69.88**	**2.704**	**68.67**	**272.97**	**1214.25**	**273.27**	**47.82**
C1351-225-4000-M	**1.351**	**34.32**	**0.225**	**5.72**	**4.000**	**101.60**	**2.925**	**74.31**	**2.873**	**72.96**	**272.97**	**1214.25**	**254.02**	**44.45**
C1351-225-4250-M	**1.351**	**34.32**	**0.225**	**5.72**	**4.250**	**107.95**	**3.100**	**78.73**	**3.042**	**77.26**	**272.97**	**1214.25**	**237.31**	**41.53**
C1351-225-4500-M	**1.351**	**34.32**	**0.225**	**5.72**	**4.500**	**114.30**	**3.274**	**83.16**	**3.211**	**81.55**	**272.97**	**1214.25**	**222.66**	**38.97**
C1351-225-4750-M	**1.351**	**34.32**	**0.225**	**5.72**	**4.750**	**120.65**	**3.448**	**87.59**	**3.380**	**85.84**	**272.97**	**1214.25**	**209.72**	**36.70**
C1351-225-5000-M	**1.351**	**34.32**	**0.225**	**5.72**	**5.000**	**127.00**	**3.623**	**92.02**	**3.549**	**90.14**	**272.97**	**1214.25**	**198.19**	**34.68**
C1351-225-5250-M	**1.351**	**34.32**	**0.225**	**5.72**	**5.250**	**133.35**	**3.797**	**96.44**	**3.718**	**94.43**	**272.97**	**1214.25**	**187.87**	**32.88**
C1351-225-5500-M	**1.351**	**34.32**	**0.225**	**5.72**	**5.500**	**139.70**	**3.971**	**100.87**	**3.887**	**98.72**	**272.97**	**1214.25**	**178.57**	**31.25**
C1351-225-5750-M	**1.351**	**34.32**	**0.225**	**5.72**	**5.750**	**146.05**	**4.146**	**105.30**	**4.056**	**103.01**	**272.97**	**1214.25**	**170.15**	**29.78**
C1351-225-6000-M	**1.351**	**34.32**	**0.225**	**5.72**	**6.000**	**152.40**	**4.320**	**109.73**	**4.225**	**107.31**	**272.97**	**1214.25**	**162.48**	**28.43**
C1351-225-6250-M	**1.351**	**34.32**	**0.225**	**5.72**	**6.250**	**158.75**	**4.494**	**114.16**	**4.394**	**111.60**	**272.97**	**1214.25**	**155.48**	**27.21**
C1351-225-6500-M	**1.351**	**34.32**	**0.225**	**5.72**	**6.500**	**165.10**	**4.669**	**118.58**	**4.563**	**115.89**	**272.97**	**1214.25**	**149.06**	**26.08**
C1351-225-6750-M	**1.351**	**34.32**	**0.225**	**5.72**	**6.750**	**171.45**	**4.843**	**123.01**	**4.732**	**120.19**	**272.97**	**1214.25**	**143.14**	**25.05**
C1351-225-7000-M	**1.351**	**34.32**	**0.225**	**5.72**	**7.000**	**177.80**	**5.017**	**127.44**	**4.901**	**124.48**	**272.97**	**1214.25**	**137.68**	**24.09**
C1351-225-7500-M	**1.351**	**34.32**	**0.225**	**5.72**	**7.500**	**190.50**	**5.366**	**136.29**	**5.239**	**133.07**	**272.97**	**1214.25**	**127.91**	**22.38**
C1351-225-8000-M	**1.351**	**34.32**	**0.225**	**5.72**	**8.000**	**203.20**	**5.715**	**145.15**	**5.577**	**141.65**	**272.97**	**1214.25**	**119.44**	**20.90**
C1351-225-8500-M	**1.351**	**34.32**	**0.225**	**5.72**	**8.500**	**215.90**	**6.063**	**154.01**	**5.915**	**150.24**	**272.97**	**1214.25**	**112.02**	**19.60**
C1351-225-9000-M	**1.351**	**34.32**	**0.225**	**5.72**	**9.000**	**228.60**	**6.412**	**162.86**	**6.253**	**158.82**	**272.97**	**1214.25**	**105.47**	**18.46**
C1351-225-9500-M	**1.351**	**34.32**	**0.225**	**5.72**	**9.500**	**241.30**	**6.761**	**171.72**	**6.591**	**167.41**	**272.97**	**1214.25**	**99.65**	**17.44**
C1351-250-2000-M	**1.351**	**34.32**	**0.250**	**6.35**	**2.000**	**50.80**	**1.699**	**43.15**	**1.646**	**41.80**	**296.77**	**1320.09**	**985.47**	**172.46**
C1351-250-2125-M	**1.351**	**34.32**	**0.250**	**6.35**	**2.125**	**53.98**	**1.797**	**45.64**	**1.739**	**44.17**	**298.38**	**1327.25**	**909.66**	**159.19**
C1351-250-2250-M	**1.351**	**34.32**	**0.250**	**6.35**	**2.250**	**57.15**	**1.895**	**48.14**	**1.832**	**46.55**	**299.76**	**1333.39**	**844.68**	**147.82**
C1351-250-2375-M	**1.351**	**34.32**	**0.250**	**6.35**	**2.375**	**60.33**	**1.993**	**50.63**	**1.926**	**48.92**	**300.96**	**1338.72**	**788.37**	**137.97**
C1351-250-2500-M	**1.351**	**34.32**	**0.250**	**6.35**	**2.500**	**63.50**	**2.091**	**53.12**	**2.019**	**51.29**	**302.00**	**1343.37**	**739.10**	**129.34**
C1351-250-2625-M	**1.351**	**34.32**	**0.250**	**6.35**	**2.625**	**66.68**	**2.190**	**55.61**	**2.113**	**53.66**	**302.93**	**1347.48**	**695.62**	**121.73**
C1351-250-2750-M	**1.351**	**34.32**	**0.250**	**6.35**	**2.750**	**69.85**	**2.288**	**58.11**	**2.206**	**56.03**	**303.75**	**1351.14**	**656.98**	**114.97**
C1351-250-2875-M	**1.351**	**34.32**	**0.250**	**6.35**	**2.875**	**73.03**	**2.386**	**60.60**	**2.299**	**58.41**	**304.48**	**1354.41**	**622.40**	**108.92**
C1351-250-3000-M	**1.351**	**34.32**	**0.250**	**6.35**	**3.000**	**76.20**	**2.484**	**63.09**	**2.393**	**60.78**	**305.14**	**1357.35**	**591.28**	**103.47**
C1351-250-3250-M	**1.351**	**34.32**	**0.250**	**6.35**	**3.250**	**82.55**	**2.680**	**68.08**	**2.580**	**65.52**	**306.29**	**1362.43**	**537.53**	**94.07**
C1351-250-3500-M	**1.351**	**34.32**	**0.250**	**6.35**	**3.500**	**88.90**	**2.876**	**73.06**	**2.766**	**70.27**	**307.24**	**1366.66**	**492.73**	**86.23**
C1351-250-3750-M	**1.351**	**34.32**	**0.250**	**6.35**	**3.750**	**95.25**	**3.073**	**78.05**	**2.953**	**75.01**	**308.04**	**1370.24**	**454.83**	**79.60**
C1351-250-4000-M	**1.351**	**34.32**	**0.250**	**6.35**	**4.000**	**101.60**	**3.142**	**79.80**	**3.140**	**79.76**	**362.41**	**1612.09**	**422.34**	**73.91**
C1351-250-4250-M	**1.351**	**34.32**	**0.250**	**6.35**	**4.250**	**107.95**	**3.331**	**84.60**	**3.327**	**84.50**	**362.41**	**1612.09**	**394.19**	**68.98**
C1351-250-4500-M	**1.351**	**34.32**	**0.250**	**6.35**	**4.500**	**114.30**	**3.519**	**89.39**	**3.514**	**89.24**	**362.41**	**1612.09**	**369.55**	**64.67**
C1351-250-4750-M	**1.351**	**34.32**	**0.250**	**6.35**	**4.750**	**120.65**	**3.708**	**94.18**	**3.700**	**93.99**	**362.41**	**1612.09**	**347.81**	**60.87**
C1351-250-5000-M	**1.351**	**34.32**	**0.250**	**6.35**	**5.000**	**127.00**	**3.897**	**98.98**	**3.887**	**98.73**	**362.41**	**1612.09**	**328.49**	**57.49**
C1351-250-5250-M	**1.351**	**34.32**	**0.250**	**6.35**	**5.250**	**133.35**	**4.085**	**103.77**	**4.074**	**103.48**	**362.41**	**1612.09**	**311.20**	**54.46**
C1351-250-5500-M	**1.351**	**34.32**	**0.250**	**6.35**	**5.500**	**139.70**	**4.274**	**108.56**	**4.261**	**108.22**	**362.41**	**1612.09**	**295.64**	**51.74**
C1351-250-5750-M	**1.351**	**34.32**	**0.250**	**6.35**	**5.750**	**146.05**	**4.463**	**113.36**	**4.447**	**112.97**	**362.41**	**1612.09**	**281.56**	**49.27**
C1351-250-6000-M	**1.351**	**34.32**	**0.250**	**6.35**	**6.000**	**152.40**	**4.652**	**118.15**	**4.634**	**117.71**	**362.41**	**1612.09**	**268.76**	**47.03**
C1351-250-6250-M	**1.351**	**34.32**	**0.250**	**6.35**	**6.250**	**158.75**	**4.840**	**122.94**	**4.821**	**122.46**	**362.41**	**1612.09**	**257.08**	**44.99**
C1351-250-6500-M	**1.351**	**34.32**	**0.250**	**6.35**	**6.500**	**165.10**	**5.029**	**127.74**	**5.008**	**127.20**	**362.41**	**1612.09**	**246.37**	**43.11**
C1351-250-6750-M	**1.351**	**34.32**	**0.250**	**6.35**	**6.750**	**171.45**	**5.218**	**132.53**	**5.195**	**131.94**	**362.41**	**1612.09**	**236.51**	**41.39**
C1351-250-7000-M	**1.351**	**34.32**	**0.250**	**6.35**	**7.000**	**177.80**	**5.406**	**137.32**	**5.381**	**136.69**	**362.41**	**1612.09**	**227.42**	**39.80**
C1351-250-7500-M	**1.351**	**34.32**	**0.250**	**6.35**	**7.500**	**190.50**	**5.784**	**146.91**	**5.755**	**146.18**	**362.41**	**1612.09**	**211.17**	**36.95**
C1351-250-8000-M	**1.351**	**34.32**	**0.250**	**6.35**	**8.000**	**203.20**	**6.161**	**156.49**	**6.129**	**155.67**	**362.41**	**1612.09**	**197.09**	**34.49**
C1351-250-8500-M	**1.351**	**34.32**	**0.250**	**6.35**	**8.500**	**215.90**	**6.539**	**166.08**	**6.502**	**165.15**	**362.41**	**1612.09**	**184.78**	**32.34**
C1351-250-9000-M	**1.351**	**34.32**	**0.250**	**6.35**	**9.000**	**228.60**	**6.916**	**175.67**	**6.876**	**174.64**	**362.41**	**1612.09**	**173.91**	**30.43**

STAINLESS STEEL						
Catalog #	Load Length (L_1)		Load (P) at L_1		Spring Rate (R)	
	in	mm	lb	N	lb/in	N/mm
C1351-207-8000-S	**5.806**	**147.48**	**156.18**	**694.73**	**71.19**	**12.46**
C1351-207-8500-S	**6.162**	**156.50**	**156.18**	**694.73**	**66.79**	**11.69**
C1351-207-9000-S	**6.517**	**165.53**	**156.18**	**694.73**	**62.90**	**11.01**
C1351-207-9500-S	**6.872**	**174.56**	**156.18**	**694.73**	**59.44**	**10.40**
C1351-225-1875-S	**1.524**	**38.71**	**193.17**	**859.27**	**550.29**	**96.30**
C1351-225-2000-S	**1.618**	**41.10**	**193.17**	**859.27**	**505.91**	**88.53**
C1351-225-2125-S	**1.712**	**43.49**	**193.17**	**859.27**	**468.16**	**81.93**
C1351-225-2250-S	**1.807**	**45.89**	**193.17**	**859.27**	**435.64**	**76.24**
C1351-225-2375-S	**1.901**	**48.28**	**193.17**	**859.27**	**407.36**	**71.29**
C1351-225-2500-S	**1.995**	**50.67**	**193.17**	**859.27**	**382.52**	**66.94**
C1351-225-2625-S	**2.089**	**53.07**	**193.17**	**859.27**	**360.53**	**63.09**
C1351-225-2750-S	**2.183**	**55.46**	**193.17**	**859.27**	**340.94**	**59.66**
C1351-225-2875-S	**2.278**	**57.85**	**193.17**	**859.27**	**323.37**	**56.59**
C1351-225-3000-S	**2.372**	**60.24**	**193.17**	**859.27**	**307.51**	**53.81**
C1351-225-3250-S	**2.560**	**65.03**	**193.17**	**859.27**	**280.06**	**49.01**
C1351-225-3500-S	**2.749**	**69.82**	**193.17**	**859.27**	**257.10**	**44.99**
C1351-225-3750-S	**2.937**	**74.60**	**193.17**	**859.27**	**237.62**	**41.58**
C1351-225-4000-S	**3.125**	**79.39**	**193.17**	**859.27**	**220.89**	**38.66**
C1351-225-4250-S	**3.314**	**84.17**	**193.17**	**859.27**	**206.36**	**36.11**
C1351-225-4500-S	**3.502**	**88.96**	**193.17**	**859.27**	**193.62**	**33.88**
C1351-225-4750-S	**3.691**	**93.74**	**193.17**	**859.27**	**182.36**	**31.91**
C1351-225-5000-S	**3.879**	**98.53**	**193.17**	**859.27**	**172.34**	**30.16**
C1351-225-5250-S	**4.068**	**103.32**	**193.17**	**859.27**	**163.37**	**28.59**
C1351-225-5500-S	**4.256**	**108.10**	**193.17**	**859.27**	**155.28**	**27.17**
C1351-225-5750-S	**4.444**	**112.89**	**193.17**	**859.27**	**147.96**	**25.89**
C1351-225-6000-S	**4.633**	**117.67**	**193.17**	**859.27**	**141.29**	**24.73**
C1351-225-6250-S	**4.821**	**122.46**	**193.17**	**859.27**	**135.20**	**23.66**
C1351-225-6500-S	**5.010**	**127.24**	**193.17**	**859.27**	**129.61**	**22.68**
C1351-225-6750-S	**5.198**	**132.03**	**193.17**	**859.27**	**124.47**	**21.78**
C1351-225-7000-S	**5.386**	**136.82**	**193.17**	**859.27**	**119.72**	**20.95**
C1351-225-7500-S	**5.763**	**146.39**	**193.17**	**859.27**	**111.23**	**19.46**
C1351-225-8000-S	**6.140**	**155.96**	**193.17**	**859.27**	**103.86**	**18.18**
C1351-225-8500-S	**6.517**	**165.53**	**193.17**	**859.27**	**97.41**	**17.05**
C1351-225-9000-S	**6.894**	**175.10**	**193.17**	**859.27**	**91.72**	**16.05**
C1351-225-9500-S	**7.271**	**184.67**	**193.17**	**859.27**	**86.65**	**15.16**
C1351-250-2000-S	**1.706**	**43.34**	**251.76**	**1119.90**	**856.93**	**149.96**
C1351-250-2125-S	**1.807**	**45.89**	**251.76**	**1119.90**	**791.01**	**138.43**
C1351-250-2250-S	**1.907**	**48.44**	**251.76**	**1119.90**	**734.51**	**128.54**
C1351-250-2375-S	**2.008**	**51.00**	**251.76**	**1119.90**	**685.54**	**119.97**
C1351-250-2500-S	**2.108**	**53.55**	**251.76**	**1119.90**	**642.69**	**112.47**
C1351-250-2625-S	**2.209**	**56.10**	**251.76**	**1119.90**	**604.89**	**105.86**
C1351-250-2750-S	**2.309**	**58.66**	**251.76**	**1119.90**	**571.28**	**99.97**
C1351-250-2875-S	**2.410**	**61.21**	**251.76**	**1119.90**	**541.22**	**94.71**
C1351-250-3000-S	**2.510**	**63.76**	**251.76**	**1119.90**	**514.16**	**89.98**
C1351-250-3250-S	**2.711**	**68.87**	**251.76**	**1119.90**	**467.41**	**81.80**
C1351-250-3500-S	**2.912**	**73.97**	**251.76**	**1119.90**	**428.46**	**74.98**
C1351-250-3750-S	**3.113**	**79.08**	**251.76**	**1119.90**	**395.50**	**69.21**
C1351-250-4000-S	**3.314**	**84.19**	**251.76**	**1119.90**	**367.25**	**64.27**
C1351-250-4250-S	**3.516**	**89.29**	**251.76**	**1119.90**	**342.77**	**59.98**
C1351-250-4500-S	**3.717**	**94.40**	**251.76**	**1119.90**	**321.35**	**56.24**
C1351-250-4750-S	**3.918**	**99.51**	**251.76**	**1119.90**	**302.44**	**52.93**
C1351-250-5000-S	**4.119**	**104.61**	**251.76**	**1119.90**	**285.64**	**49.99**
C1351-250-5250-S	**4.320**	**109.72**	**251.76**	**1119.90**	**270.61**	**47.36**
C1351-250-5500-S	**4.521**	**114.82**	**251.76**	**1119.90**	**257.08**	**44.99**
C1351-250-5750-S	**4.722**	**119.93**	**251.76**	**1119.90**	**244.84**	**42.85**
C1351-250-6000-S	**4.923**	**125.04**	**251.76**	**1119.90**	**233.71**	**40.90**
C1351-250-6250-S	**5.124**	**130.14**	**251.76**	**1119.90**	**223.55**	**39.12**
C1351-250-6500-S	**5.325**	**135.25**	**251.76**	**1119.90**	**214.23**	**37.49**
C1351-250-6750-S	**5.526**	**140.36**	**251.76**	**1119.90**	**205.66**	**35.99**
C1351-250-7000-S	**5.727**	**145.46**	**251.76**	**1119.90**	**197.75**	**34.61**
C1351-250-7500-S	**6.129**	**155.67**	**251.76**	**1119.90**	**183.63**	**32.13**
C1351-250-8000-S	**6.531**	**165.89**	**251.76**	**1119.90**	**171.39**	**29.99**
C1351-250-8500-S	**6.933**	**176.10**	**251.76**	**1119.90**	**160.67**	**28.12**
C1351-250-9000-S	**7.335**	**186.31**	**251.76**	**1119.90**	**151.22**	**26.46**

FOR INFORMATION ON ALTERNATIVE FINISHES, SEE PAGE 311

Part Numbers with an "*" are squared and not ground. **Part Numbers in bold** represent the newly expanded Associated Spring RAYMOND compression spring offering.

MUSIC WIRE															STAINLESS STEEL						
Catalog #	Outside Diameter (OD)		Wire Diameter (d)		Free Length (L) Approx		Load Length (L_1)		Solid Height (Sh) Approx		Load (P) at L_1		Spring Rate (R)		Catalog #	Load Length (L_1)		Load (P) at L_1		Spring Rate (R)	
	in	mm	in	mm	in	mm	in	mm	in	mm	lb	N	lb/in	N/mm		in	mm	lb	N	lb/in	N/mm
C1351-250-9500-M	**1.351**	**34.32**	**0.250**	**6.35**	**9.500**	**241.30**	**7.293**	**185.25**	**7.249**	**184.13**	**362.41**	**1612.09**	**164.24**	**28.74**	**C1351-250-9500-S**	**7.737**	**196.52**	**251.76**	**1119.90**	**142.82**	**24.99**
D13140	1.358	34.50	0.098	2.50	2.815	71.50	0.760	19.30	0.541	13.75	41.01	182.40	19.89	3.48	D23140	0.760	19.30	34.16	151.94	16.57	2.90
D13150	1.358	34.50	0.098	2.50	4.331	110.00	1.098	27.90	0.738	18.75	41.01	182.40	12.69	2.22	D23150	1.098	27.90	34.16	151.94	10.57	1.85
D13160	1.358	34.50	0.098	2.50	6.693	170.00	1.614	41.00	1.033	26.25	41.01	182.40	8.17	1.43	D23160	1.614	41.00	34.16	151.94	6.80	1.19
D13170	1.358	34.50	0.098	2.50	9.646	245.00	2.287	58.10	1.427	36.25	41.01	182.40	5.54	0.97	D23170	2.287	58.10	34.16	151.94	4.63	0.81
D13180	1.358	34.50	0.098	2.50	14.173	360.00	3.303	83.90	2.018	51.25	41.01	182.40	3.77	0.66	D23180	3.303	83.90	34.16	151.94	3.14	0.55
D13430	1.386	35.20	0.126	3.20	2.303	58.50	0.780	19.80	0.693	17.60	81.13	360.88	53.20	9.31	D23430	0.780	19.80	67.61	300.73	44.34	7.76
D13440	1.386	35.20	0.126	3.20	3.484	88.50	1.079	27.40	0.945	24.00	81.13	360.88	33.83	5.92	D23440	1.079	27.40	67.61	300.73	28.17	4.93
D13450	1.386	35.20	0.126	3.20	5.315	135.00	1.528	38.80	1.323	33.60	81.13	360.88	21.83	3.82	D23450	1.528	38.80	67.61	300.73	18.17	3.18
D13460	1.386	35.20	0.126	3.20	7.480	190.00	2.130	54.10	1.827	46.40	81.13	360.88	14.91	2.61	D23460	2.130	54.10	67.61	300.73	12.40	2.17
D13470	1.386	35.20	0.126	3.20	11.024	280.00	3.031	77.00	2.583	65.60	81.13	360.88	10.06	1.76	D23470	3.031	77.00	67.61	300.73	8.40	1.47
C1400-162-2250-M	**1.400**	**35.56**	**0.162**	**4.12**	**2.250**	**57.15**	**1.280**	**32.50**	**1.105**	**28.08**	**112.57**	**500.74**	**116.00**	**20.30**	**C1400-162-2250-S**	**1.423**	**36.14**	**79.92**	**355.52**	**96.63**	**16.91**
C1400-162-2500-M	**1.400**	**35.56**	**0.162**	**4.12**	**2.500**	**63.50**	**1.407**	**35.74**	**1.202**	**30.53**	**112.57**	**500.74**	**103.00**	**18.03**	**C1400-162-2500-S**	**1.568**	**39.84**	**79.92**	**355.52**	**85.80**	**15.01**
C1400-162-3000-M	**1.400**	**35.56**	**0.162**	**4.12**	**3.000**	**76.20**	**1.660**	**42.16**	**1.397**	**35.48**	**112.57**	**500.74**	**84.00**	**14.70**	**C1400-162-3000-S**	**1.858**	**47.19**	**79.92**	**355.52**	**69.97**	**12.25**
C1400-162-3500-M	**1.400**	**35.56**	**0.162**	**4.12**	**3.500**	**88.90**	**1.892**	**48.05**	**1.608**	**40.85**	**112.57**	**500.74**	**70.00**	**12.25**	**C1400-162-3500-S**	**2.129**	**54.09**	**79.92**	**355.52**	**58.31**	**10.20**
C1400-162-4000-M	**1.400**	**35.56**	**0.162**	**4.12**	**4.000**	**101.60**	**2.155**	**54.73**	**1.795**	**45.60**	**112.57**	**500.74**	**61.00**	**10.68**	**C1400-162-4000-S**	**2.427**	**61.65**	**79.92**	**355.52**	**50.81**	**8.89**
C1400-162-4250-M	**1.400**	**35.56**	**0.162**	**4.12**	**4.250**	**107.95**	**2.275**	**57.79**	**1.897**	**48.19**	**112.57**	**500.74**	**57.00**	**9.98**	**C1400-162-4250-S**	**2.567**	**65.19**	**79.92**	**355.52**	**47.48**	**8.31**
C1400-162-4500-M	**1.400**	**35.56**	**0.162**	**4.12**	**4.500**	**114.30**	**2.415**	**61.35**	**1.984**	**50.39**	**112.57**	**500.74**	**54.00**	**9.45**	**C1400-162-4500-S**	**2.723**	**69.17**	**79.92**	**355.52**	**44.98**	**7.87**
C1400-162-5000-M	**1.400**	**35.56**	**0.162**	**4.12**	**5.000**	**127.00**	**2.655**	**67.43**	**2.189**	**55.61**	**112.57**	**500.74**	**48.00**	**8.40**	**C1400-162-5000-S**	**3.001**	**76.23**	**79.92**	**355.52**	**39.98**	**7.00**
C1400-162-5250-M	**1.400**	**35.56**	**0.162**	**4.12**	**5.250**	**133.35**	**2.748**	**69.81**	**2.313**	**58.74**	**112.57**	**500.74**	**45.00**	**7.88**	**C1400-162-5250-S**	**3.118**	**79.19**	**79.92**	**355.52**	**37.49**	**6.56**
C1400-177-2250-M	**1.400**	**35.56**	**0.177**	**4.50**	**2.250**	**57.15**	**1.400**	**35.56**	**1.220**	**30.99**	**143.66**	**639.01**	**169.00**	**29.58**	**C1400-177-2250-S**	**1.534**	**38.96**	**100.82**	**448.48**	**140.78**	**24.64**
C1400-177-2500-M	**1.400**	**35.56**	**0.177**	**4.50**	**2.500**	**63.50**	**1.536**	**39.01**	**1.334**	**33.88**	**143.66**	**639.01**	**149.00**	**26.08**	**C1400-177-2500-S**	**1.688**	**42.87**	**100.82**	**448.48**	**124.12**	**21.72**
C1400-177-3000-M	**1.400**	**35.56**	**0.177**	**4.50**	**3.000**	**76.20**	**1.803**	**45.79**	**1.566**	**39.78**	**143.66**	**639.01**	**120.00**	**21.00**	**C1400-177-3000-S**	**1.991**	**50.58**	**100.82**	**448.48**	**99.96**	**17.49**
C1400-177-3500-M	**1.400**	**35.56**	**0.177**	**4.50**	**3.500**	**88.90**	**2.063**	**52.41**	**1.805**	**45.85**	**143.66**	**639.01**	**100.00**	**17.50**	**C1400-177-3500-S**	**2.290**	**58.16**	**100.82**	**448.48**	**83.30**	**14.58**
C1400-177-4000-M	**1.400**	**35.56**	**0.177**	**4.50**	**4.000**	**101.60**	**2.349**	**59.66**	**2.019**	**51.29**	**143.66**	**639.01**	**87.00**	**15.23**	**C1400-177-4000-S**	**2.609**	**66.26**	**100.82**	**448.48**	**72.47**	**12.68**
C1400-177-4250-M	**1.400**	**35.56**	**0.177**	**4.50**	**4.250**	**107.95**	**2.454**	**62.34**	**2.164**	**54.95**	**143.66**	**639.01**	**80.00**	**14.00**	**C1400-177-4250-S**	**2.737**	**69.52**	**100.82**	**448.48**	**66.64**	**11.66**
C1400-177-4500-M	**1.400**	**35.56**	**0.177**	**4.50**	**4.500**	**114.30**	**2.610**	**66.29**	**2.258**	**57.35**	**143.66**	**639.01**	**76.00**	**13.30**	**C1400-177-4500-S**	**2.907**	**73.85**	**100.82**	**448.48**	**63.31**	**11.08**
C1400-177-5000-M	**1.400**	**35.56**	**0.177**	**4.50**	**5.000**	**127.00**	**2.918**	**74.12**	**2.449**	**62.21**	**143.66**	**639.01**	**69.00**	**12.08**	**C1400-177-5000-S**	**3.246**	**82.44**	**100.82**	**448.48**	**57.48**	**10.06**
C1400-177-5250-M	**1.400**	**35.56**	**0.177**	**4.50**	**5.250**	**133.35**	**3.040**	**77.21**	**2.577**	**65.46**	**143.66**	**639.01**	**65.00**	**11.38**	**C1400-177-5250-S**	**3.388**	**86.05**	**100.82**	**448.48**	**54.15**	**9.48**
C1410-112-2500-M	**1.410**	**35.81**	**0.112**	**2.85**	**2.500**	**63.50**	**0.960**	**24.39**	**0.723**	**18.36**	**38.42**	**170.89**	**24.95**	**4.37**	**C1410-112-2500-S**	**1.135**	**28.82**	**29.62**	**131.74**	**21.69**	**3.80**
C1410-112-2625-M	**1.410**	**35.81**	**0.112**	**2.85**	**2.625**	**66.68**	**1.001**	**25.41**	**0.750**	**19.04**	**38.42**	**170.89**	**23.65**	**4.14**	**C1410-112-2625-S**	**1.185**	**30.09**	**29.62**	**131.74**	**20.56**	**3.60**
C1410-112-2750-M	**1.410**	**35.81**	**0.112**	**2.85**	**2.750**	**69.85**	**1.041**	**26.44**	**0.776**	**19.72**	**38.42**	**170.89**	**22.48**	**3.93**	**C1410-112-2750-S**	**1.235**	**31.37**	**29.62**	**131.74**	**19.55**	**3.42**
C1410-112-2875-M	**1.410**	**35.81**	**0.112**	**2.85**	**2.875**	**73.03**	**1.081**	**27.47**	**0.803**	**20.40**	**38.42**	**170.89**	**21.42**	**3.75**	**C1410-112-2875-S**	**1.285**	**32.64**	**29.62**	**131.74**	**18.63**	**3.26**
C1410-112-3000-M	**1.410**	**35.81**	**0.112**	**2.85**	**3.000**	**76.20**	**1.122**	**28.49**	**0.830**	**21.08**	**38.42**	**170.89**	**20.45**	**3.58**	**C1410-112-3000-S**	**1.335**	**33.91**	**29.62**	**131.74**	**17.79**	**3.11**
C1410-112-3250-M	**1.410**	**35.81**	**0.112**	**2.85**	**3.250**	**82.55**	**1.203**	**30.55**	**0.883**	**22.44**	**38.42**	**170.89**	**18.76**	**3.28**	**C1410-112-3250-S**	**1.435**	**36.45**	**29.62**	**131.74**	**16.32**	**2.86**
C1410-112-3500-M	**1.410**	**35.81**	**0.112**	**2.85**	**3.500**	**88.90**	**1.284**	**32.60**	**0.937**	**23.80**	**38.42**	**170.89**	**17.33**	**3.03**	**C1410-112-3500-S**	**1.535**	**38.99**	**29.62**	**131.74**	**15.07**	**2.64**
C1410-112-3750-M	**1.410**	**35.81**	**0.112**	**2.85**	**3.750**	**95.25**	**1.364**	**34.65**	**0.991**	**25.16**	**38.42**	**170.89**	**16.10**	**2.82**	**C1410-112-3750-S**	**1.635**	**41.53**	**29.62**	**131.74**	**14.00**	**2.45**
C1410-112-4000-M	**1.410**	**35.81**	**0.112**	**2.85**	**4.000**	**101.60**	**1.445**	**36.71**	**1.044**	**26.52**	**38.42**	**170.89**	**15.04**	**2.63**	**C1410-112-4000-S**	**1.735**	**44.07**	**29.62**	**131.74**	**13.08**	**2.29**
C1410-112-4250-M	**1.410**	**35.81**	**0.112**	**2.85**	**4.250**	**107.95**	**1.526**	**38.76**	**1.098**	**27.88**	**38.42**	**170.89**	**14.10**	**2.47**	**C1410-112-4250-S**	**1.835**	**46.61**	**29.62**	**131.74**	**12.26**	**2.15**
C1410-112-4500-M	**1.410**	**35.81**	**0.112**	**2.85**	**4.500**	**114.30**	**1.607**	**40.82**	**1.151**	**29.24**	**38.42**	**170.89**	**13.28**	**2.32**	**C1410-112-4500-S**	**1.935**	**49.15**	**29.62**	**131.74**	**11.55**	**2.02**
C1410-112-4750-M	**1.410**	**35.81**	**0.112**	**2.85**	**4.750**	**120.65**	**1.688**	**42.87**	**1.205**	**30.60**	**38.42**	**170.89**	**12.55**	**2.20**	**C1410-112-4750-S**	**2.035**	**51.69**	**29.62**	**131.74**	**10.91**	**1.91**
C1410-112-5000-M	**1.410**	**35.81**	**0.112**	**2.85**	**5.000**	**127.00**	**1.769**	**44.92**	**1.258**	**31.96**	**38.42**	**170.89**	**11.89**	**2.08**	**C1410-112-5000-S**	**2.135**	**54.24**	**29.62**	**131.74**	**10.34**	**1.81**
C1410-112-5250-M	**1.410**	**35.81**	**0.112**	**2.85**	**5.250**	**133.35**	**1.849**	**46.98**	**1.312**	**33.32**	**38.42**	**170.89**	**11.30**	**1.98**	**C1410-112-5250-S**	**2.235**	**56.78**	**29.62**	**131.74**	**9.82**	**1.72**
C1410-112-5500-M	**1.410**	**35.81**	**0.112**	**2.85**	**5.500**	**139.70**	**1.930**	**49.03**	**1.365**	**34.68**	**38.42**	**170.89**	**10.76**	**1.88**	**C1410-112-5500-S**	**2.335**	**59.32**	**29.62**	**131.74**	**9.36**	**1.64**
C1410-112-5750-M	**1.410**	**35.81**	**0.112**	**2.85**	**5.750**	**146.05**	**2.011**	**51.08**	**1.419**	**36.04**	**38.42**	**170.89**	**10.28**	**1.80**	**C1410-112-5750-S**	**2.435**	**61.86**	**29.62**	**131.74**	**8.94**	**1.56**
C1410-112-6000-M	**1.410**	**35.81**	**0.112**	**2.85**	**6.000**	**152.40**	**2.092**	**53.14**	**1.473**	**37.40**	**38.42**	**170.89**	**9.83**	**1.72**	**C1410-112-6000-S**	**2.535**	**64.40**	**29.62**	**131.74**	**8.55**	**1.50**
C1410-112-6250-M	**1.410**	**35.81**	**0.112**	**2.85**	**6.250**	**158.75**	**2.173**	**55.19**	**1.526**	**38.76**	**38.42**	**170.89**	**9.42**	**1.65**	**C1410-112-6250-S**	**2.635**	**66.94**	**29.62**	**131.74**	**8.19**	**1.43**
C1410-112-6500-M	**1.410**	**35.81**	**0.112**	**2.85**	**6.500**	**165.10**	**2.254**	**57.25**	**1.580**	**40.12**	**38.42**	**170.89**	**9.05**	**1.58**	**C1410-112-6500-S**	**2.736**	**69.48**	**29.62**	**131.74**	**7.87**	**1.38**
C1410-112-6750-M	**1.410**	**35.81**	**0.112**	**2.85**	**6.750**	**171.45**	**2.335**	**59.30**	**1.633**	**41.48**	**38.42**	**170.89**	**8.70**	**1.52**	**C1410-112-6750-S**	**2.836**	**72.02**	**29.62**	**131.74**	**7.57**	**1.32**
C1410-112-7000-M	**1.410**	**35.81**	**0.112**	**2.85**	**7.000**	**177.80**	**2.415**	**61.35**	**1.687**	**42.84**	**38.42**	**170.89**	**8.38**	**1.47**	**C1410-112-7000-S**	**2.936**	**74.56**	**29.62**	**131.74**	**7.29**	**1.28**
C1410-112-7500-M	**1.410**	**35.81**	**0.112**	**2.85**	**7.500**	**190.50**	**2.577**	**65.46**	**1.794**	**45.56**	**38.42**	**170.89**	**7.80**	**1.37**	**C1410-112-7500-S**	**3.136**	**79.65**	**29.62**	**131.74**	**6.79**	**1.19**
C1410-112-8000-M	**1.410**	**35.81**	**0.112**	**2.85**	**8.000**	**203.20**	**2.739**	**69.57**	**1.901**	**48.29**	**38.42**	**170.89**	**7.30**	**1.28**	**C1410-112-8000-S**	**3.336**	**84.73**	**29.62**	**131.74**	**6.35**	**1.11**
C1410-112-8500-M	**1.410**	**35.81**	**0.112**	**2.85**	**8.500**	**215.90**	**2.901**	**73.68**	**2.008**	**51.01**	**38.42**	**170.89**	**6.86**	**1.20**	**C1410-112-8500-S**	**3.536**	**89.81**	**29.62**	**131.74**	**5.97**	**1.04**
C1410-112-9000-M	**1.410**	**35.81**	**0.112**	**2.85**	**9.000**	**228.60**	**3.062**	**77.78**	**2.115**	**53.73**	**38.42**	**170.89**	**6.47**	**1.13**	**C1410-112-9000-S**	**3.736**	**94.89**	**29.62**	**131.74**	**5.63**	**0.98**
C1410-112-9500-M	**1.410**	**35.81**	**0.112**	**2.85**	**9.500**	**241.30**	**3.224**	**81.89**	**2.222**	**56.45**	**38.42**	**170.89**	**6.12**	**1.07**	**C1410-112-9500-S**	**3.936**	**99.98**	**29.62**	**131.74**	**5.32**	**0.93**
C1410-125-2250-M	**1.410**	**35.81**	**0.125**	**3.18**	**2.250**	**57.15**	**0.979**	**24.85**	**0.792**	**20.11**	**52.15**	**231.96**	**41.01**	**7.18**	**C1410-125-2250-S**	**1.133**	**28.79**	**39.82**	**177.13**	**35.66**	**6.24**
C1410-125-2375-M	**1.410**	**35.81**	**0.125**	**3.18**	**2.375**	**60.33**	**1.024**	**26.01**	**0.825**	**20.95**	**52.15**	**231.96**	**38.60**	**6.76**	**C1410-125-2375-S**	**1.189**	**30.19**	**39.82**	**177.13**	**33.57**	**5.87**
C1410-125-2500-M	**1.410**	**35.81**	**0.125**	**3.18**	**2.500**	**63.50**	**1.070**	**27.17**	**0.858**	**21.79**	**52.15**	**231.96**	**36.46**	**6.38**	**C1410-125-2500-S**	**1.244**	**31.59**	**39.82**	**177.13**	**31.70**	**5.55**
C1410-125-2625-M	**1.410**	**35.81**	**0.125**	**3.18**	**2.625**	**66.68**	**1.115**	**28.32**	**0.891**	**22.63**	**52.15**	**231.96**	**34.54**	**6.04**	**C1410-125-2625-S**	**1.299**	**33.00**	**39.82**	**177.13**	**30.03**	**5.26**
C1410-125-2750-M	**1.410**	**35.81**	**0.125**	**3.18**	**2.750**	**69.85**	**1.161**	**29.48**	**0.924**	**23.47**	**52.15**	**231.96**	**32.81**	**5.74**	**C1410-125-2750-S**	**1.354**	**34.40**	**39.82**	**177.13**	**28.53**	**4.99**
C1410-125-2875-M	**1.410**	**35.81**	**0.125**	**3.18**	**2.875**	**73.03**	**1.206**	**30.64**	**0.957**	**24.31**	**52.15**	**231.96**	**31.25**	**5.47**	**C1410-125-2875-S**	**1.409**	**35.80**	**39.82**	**177.13**	**27.17**	**4.76**
C1410-125-3000-M	**1.410**	**35.81**	**0.125**	**3.18**	**3.000**	**76.20**	**1.252**	**31.79**	**0.990**	**25.15**	**52.15**	**231.96**	**29.83**	**5.22**	**C1410-125-3000-S**	**1.465**	**37.20**	**39.82**	**177.13**	**25.94**	**4.54**
C1410-125-3250-M	**1.410**	**35.81**	**0.125**	**3.18**	**3.250**	**82.55**	**1.343**	**34.11**	**1.056**	**26.83**	**52.15**	**231.96**	**27.34**	**4.78**	**C1410-125-3250-S**	**1.575**	**40.01**	**39.82**	**177.13**	**23.78**	**4.16**
C1410-125-3500-M	**1.410**	**35.81**	**0.125**	**3.18**	**3.500**	**88.90**	**1.434**	**36.42**	**1.123**	**28.52**	**52.15**	**231.96**	**25.24**	**4.42**	**C1410-125-3500-S**	**1.686**	**42.81**	**39.82**	**177.13**	**21.95**	**3.84**

Part Numbers with an "*" are squared and not ground. **Part Numbers in bold** represent the newly expanded Associated Spring RAYMOND compression spring offering.

MUSIC WIRE														
Catalog #	Outside Diameter (OD)		Wire Diameter (d)		Free Length (L) Approx		Load Length (L_1)		Solid Height (Sh) Approx		Load (P) at L_1		Spring Rate (R)	
	in	mm	in	mm	in	mm	in	mm	in	mm	lb	N	lb/in	N/mm
C1410-125-3750-M	1.410	35.81	0.125	3.18	3.750	95.25	1.525	38.73	1.189	30.20	52.15	231.96	23.44	4.10
C1410-125-4000-M	1.410	35.81	0.125	3.18	4.000	101.60	1.616	41.05	1.255	31.88	52.15	231.96	21.87	3.83
C1410-125-4250-M	1.410	35.81	0.125	3.18	4.250	107.95	1.707	43.36	1.321	33.56	52.15	231.96	20.51	3.59
C1410-125-4500-M	1.410	35.81	0.125	3.18	4.500	114.30	1.798	45.67	1.387	35.24	52.15	231.96	19.30	3.38
C1410-125-4750-M	1.410	35.81	0.125	3.18	4.750	120.65	1.889	47.98	1.453	36.92	52.15	231.96	18.23	3.19
C1410-125-5000-M	1.410	35.81	0.125	3.18	5.000	127.00	1.980	50.30	1.520	38.60	52.15	231.96	17.27	3.02
C1410-125-5250-M	1.410	35.81	0.125	3.18	5.250	133.35	2.071	52.61	1.586	40.28	52.15	231.96	16.41	2.87
C1410-125-5500-M	1.410	35.81	0.125	3.18	5.500	139.70	2.162	54.92	1.652	41.96	52.15	231.96	15.62	2.73
C1410-125-5750-M	1.410	35.81	0.125	3.18	5.750	146.05	2.253	57.24	1.718	43.64	52.15	231.96	14.91	2.61
C1410-125-6000-M	1.410	35.81	0.125	3.18	6.000	152.40	2.344	59.55	1.784	45.32	52.15	231.96	14.27	2.50
C1410-125-6250-M	1.410	35.81	0.125	3.18	6.250	158.75	2.436	61.86	1.850	47.00	52.15	231.96	13.67	2.39
C1410-125-6500-M	1.410	35.81	0.125	3.18	6.500	165.10	2.527	64.18	1.917	48.68	52.15	231.96	13.12	2.30
C1410-125-6750-M	1.410	35.81	0.125	3.18	6.750	171.45	2.618	66.49	1.983	50.36	52.15	231.96	12.62	2.21
C1410-125-7000-M	1.410	35.81	0.125	3.18	7.000	177.80	2.709	68.80	2.049	52.04	52.15	231.96	12.15	2.13
C1410-125-7500-M	1.410	35.81	0.125	3.18	7.500	190.50	2.891	73.43	2.181	55.41	52.15	231.96	11.31	1.98
C1410-125-8000-M*	1.410	35.81	0.125	3.18	8.000	203.20	3.152	80.07	2.412	61.26	52.15	231.96	10.76	1.88
C1410-125-8500-M*	1.410	35.81	0.125	3.18	8.500	215.90	3.335	84.70	2.544	64.62	52.15	231.96	10.10	1.77
C1410-125-9000-M*	1.410	35.81	0.125	3.18	9.000	228.60	3.517	89.32	2.676	67.98	52.15	231.96	9.51	1.66
C1410-125-9500-M*	1.410	35.81	0.125	3.18	9.500	241.30	3.699	93.95	2.809	71.34	52.15	231.96	8.99	1.57
C1410-135-2250-M	1.410	35.81	0.135	3.43	2.250	57.15	1.056	26.82	0.887	22.54	64.57	287.22	54.07	9.46
C1410-135-2375-M	1.410	35.81	0.135	3.43	2.375	60.33	1.105	28.08	0.926	23.51	64.57	287.22	50.86	8.90
C1410-135-2500-M	1.410	35.81	0.135	3.43	2.500	63.50	1.155	29.34	0.964	24.48	64.57	287.22	48.01	8.40
C1410-135-2625-M	1.410	35.81	0.135	3.43	2.625	66.68	1.205	30.60	1.002	25.44	64.57	287.22	45.46	7.96
C1410-135-2750-M	1.410	35.81	0.135	3.43	2.750	69.85	1.254	31.86	1.040	26.41	64.57	287.22	43.17	7.55
C1410-135-2875-M	1.410	35.81	0.135	3.43	2.875	73.03	1.304	33.12	1.078	27.38	64.57	287.22	41.10	7.19
C1410-135-3000-M	1.410	35.81	0.135	3.43	3.000	76.20	1.354	34.38	1.116	28.35	64.57	287.22	39.22	6.86
C1410-135-3250-M	1.410	35.81	0.135	3.43	3.250	82.55	1.453	36.90	1.192	30.29	64.57	287.22	35.93	6.29
C1410-135-3500-M	1.410	35.81	0.135	3.43	3.500	88.90	1.552	39.42	1.269	32.22	64.57	287.22	33.15	5.80
C1410-135-3750-M	1.410	35.81	0.135	3.43	3.750	95.25	1.651	41.94	1.345	34.16	64.57	287.22	30.77	5.38
C1410-135-4000-M	1.410	35.81	0.135	3.43	4.000	101.60	1.750	44.46	1.421	36.10	64.57	287.22	28.70	5.02
C1410-135-4250-M	1.410	35.81	0.135	3.43	4.250	107.95	1.850	46.98	1.497	38.03	64.57	287.22	26.90	4.71
C1410-135-4500-M	1.410	35.81	0.135	3.43	4.500	114.30	1.949	49.50	1.574	39.97	64.57	287.22	25.31	4.43
C1410-135-4750-M	1.410	35.81	0.135	3.43	4.750	120.65	2.048	52.02	1.650	41.91	64.57	287.22	23.90	4.18
C1410-135-5000-M	1.410	35.81	0.135	3.43	5.000	127.00	2.147	54.54	1.726	43.84	64.57	287.22	22.64	3.96
C1410-135-5250-M	1.410	35.81	0.135	3.43	5.250	133.35	2.247	57.06	1.802	45.78	64.57	287.22	21.50	3.76
C1410-135-5500-M	1.410	35.81	0.135	3.43	5.500	139.70	2.346	59.58	1.879	47.72	64.57	287.22	20.47	3.58
C1410-135-5750-M	1.410	35.81	0.135	3.43	5.750	146.05	2.445	62.10	1.955	49.65	64.57	287.22	19.54	3.42
C1410-135-6000-M	1.410	35.81	0.135	3.43	6.000	152.40	2.544	64.62	2.031	51.59	64.57	287.22	18.69	3.27
C1410-135-6250-M	1.410	35.81	0.135	3.43	6.250	158.75	2.643	67.14	2.107	53.53	64.57	287.22	17.90	3.13
C1410-135-6500-M	1.410	35.81	0.135	3.43	6.500	165.10	2.743	69.66	2.184	55.46	64.57	287.22	17.19	3.01
C1410-135-6750-M*	1.410	35.81	0.135	3.43	6.750	171.45	2.923	74.25	2.360	59.96	64.57	287.22	16.87	2.95
C1410-135-7000-M*	1.410	35.81	0.135	3.43	7.000	177.80	3.023	76.77	2.437	61.89	64.57	287.22	16.23	2.84
C1410-135-7500-M*	1.410	35.81	0.135	3.43	7.500	190.50	3.221	81.81	2.589	65.77	64.57	287.22	15.09	2.64
C1410-135-8000-M*	1.410	35.81	0.135	3.43	8.000	203.20	3.419	86.85	2.742	69.64	64.57	287.22	14.10	2.47
C1410-135-8500-M*	1.410	35.81	0.135	3.43	8.500	215.90	3.618	91.89	2.894	73.51	64.57	287.22	13.23	2.31
C1410-135-9000-M*	1.410	35.81	0.135	3.43	9.000	228.60	3.816	96.94	3.047	77.39	64.57	287.22	12.46	2.18
C1410-135-9500-M*	1.410	35.81	0.135	3.43	9.500	241.30	4.015	101.98	3.199	81.26	64.57	287.22	11.77	2.06
C1410-148-2125-M	1.410	35.81	0.148	3.76	2.125	53.98	1.101	27.97	0.966	24.54	83.30	370.55	81.35	14.24
C1410-148-2250-M	1.410	35.81	0.148	3.76	2.250	57.15	1.156	29.36	1.011	25.68	83.30	370.55	76.15	13.33
C1410-148-2375-M	1.410	35.81	0.148	3.76	2.375	60.33	1.211	30.76	1.056	26.82	83.30	370.55	71.57	12.52
C1410-148-2500-M	1.410	35.81	0.148	3.76	2.500	63.50	1.266	32.16	1.101	27.96	83.30	370.55	67.51	11.81
C1410-148-2625-M	1.410	35.81	0.148	3.76	2.625	66.68	1.321	33.55	1.145	29.10	83.30	370.55	63.89	11.18
C1410-148-2750-M	1.410	35.81	0.148	3.76	2.750	69.85	1.376	34.95	1.190	30.23	83.30	370.55	60.63	10.61
C1410-148-2875-M	1.410	35.81	0.148	3.76	2.875	73.03	1.431	36.35	1.235	31.37	83.30	370.55	57.69	10.10
C1410-148-3000-M	1.410	35.81	0.148	3.76	3.000	76.20	1.486	37.75	1.280	32.51	83.30	370.55	55.03	9.63
C1410-148-3250-M	1.410	35.81	0.148	3.76	3.250	82.55	1.596	40.54	1.369	34.79	83.30	370.55	50.37	8.81
C1410-148-3500-M	1.410	35.81	0.148	3.76	3.500	88.90	1.706	43.34	1.459	37.06	83.30	370.55	46.44	8.13
C1410-148-3750-M	1.410	35.81	0.148	3.76	3.750	95.25	1.816	46.13	1.549	39.34	83.30	370.55	43.08	7.54
C1410-148-4000-M	1.410	35.81	0.148	3.76	4.000	101.60	1.926	48.93	1.638	41.61	83.30	370.55	40.17	7.03
C1410-148-4250-M	1.410	35.81	0.148	3.76	4.250	107.95	2.036	51.72	1.728	43.89	83.30	370.55	37.63	6.59
C1410-148-4500-M	1.410	35.81	0.148	3.76	4.500	114.30	2.146	54.52	1.817	46.16	83.30	370.55	35.39	6.19
C1410-148-4750-M	1.410	35.81	0.148	3.76	4.750	120.65	2.256	57.31	1.907	48.44	83.30	370.55	33.41	5.85
C1410-148-5000-M	1.410	35.81	0.148	3.76	5.000	127.00	2.366	60.11	1.997	50.72	83.30	370.55	31.63	5.54
C1410-148-5250-M	1.410	35.81	0.148	3.76	5.250	133.35	2.476	62.90	2.086	52.99	83.30	370.55	30.03	5.26

STAINLESS STEEL						
Catalog #	Load Length (L_1)		Load (P) at L_1		Spring Rate (R)	
	in	mm	lb	N	lb/in	N/mm
C1410-125-3750-S	1.796	45.62	39.82	177.13	20.38	3.57
C1410-125-4000-S	1.906	48.42	39.82	177.13	19.02	3.33
C1410-125-4250-S	2.017	51.23	39.82	177.13	17.83	3.12
C1410-125-4500-S	2.127	54.03	39.82	177.13	16.78	2.94
C1410-125-4750-S	2.238	56.84	39.82	177.13	15.85	2.77
C1410-125-5000-S	2.348	59.64	39.82	177.13	15.02	2.63
C1410-125-5250-S	2.458	62.45	39.82	177.13	14.27	2.50
C1410-125-5500-S	2.569	65.25	39.82	177.13	13.59	2.38
C1410-125-5750-S	2.679	68.05	39.82	177.13	12.97	2.27
C1410-125-6000-S	2.790	70.86	39.82	177.13	12.40	2.17
C1410-125-6250-S	2.900	73.66	39.82	177.13	11.89	2.08
C1410-125-6500-S	3.011	76.47	39.82	177.13	11.41	2.00
C1410-125-6750-S	3.121	79.27	39.82	177.13	10.97	1.92
C1410-125-7000-S	3.231	82.08	39.82	177.13	10.57	1.85
C1410-125-7500-S	3.452	87.69	39.82	177.13	9.84	1.72
C1410-125-8000-S*	3.743	95.07	39.82	177.13	9.35	1.64
C1410-125-8500-S*	3.964	100.68	39.82	177.13	8.78	1.54
C1410-125-9000-S*	4.185	106.29	39.82	177.13	8.27	1.45
C1410-125-9500-S*	4.405	111.90	39.82	177.13	7.82	1.37
C1410-135-2250-S	1.209	30.71	48.94	217.70	47.02	8.23
C1410-135-2375-S	1.268	32.22	48.94	217.70	44.23	7.74
C1410-135-2500-S	1.328	33.72	48.94	217.70	41.75	7.31
C1410-135-2625-S	1.387	35.23	48.94	217.70	39.53	6.92
C1410-135-2750-S	1.446	36.74	48.94	217.70	37.54	6.57
C1410-135-2875-S	1.506	38.24	48.94	217.70	35.74	6.25
C1410-135-3000-S	1.565	39.75	48.94	217.70	34.10	5.97
C1410-135-3250-S	1.683	42.76	48.94	217.70	31.24	5.47
C1410-135-3500-S	1.802	45.77	48.94	217.70	28.82	5.04
C1410-135-3750-S	1.921	48.78	48.94	217.70	26.75	4.68
C1410-135-4000-S	2.039	51.80	48.94	217.70	24.96	4.37
C1410-135-4250-S	2.158	54.81	48.94	217.70	23.39	4.09
C1410-135-4500-S	2.276	57.82	48.94	217.70	22.01	3.85
C1410-135-4750-S	2.395	60.83	48.94	217.70	20.78	3.64
C1410-135-5000-S	2.514	63.84	48.94	217.70	19.68	3.44
C1410-135-5250-S	2.632	66.86	48.94	217.70	18.70	3.27
C1410-135-5500-S	2.751	69.87	48.94	217.70	17.80	3.12
C1410-135-5750-S	2.869	72.88	48.94	217.70	16.99	2.97
C1410-135-6000-S	2.988	75.89	48.94	217.70	16.25	2.84
C1410-135-6250-S	3.106	78.90	48.94	217.70	15.57	2.72
C1410-135-6500-S	3.225	81.91	48.94	217.70	14.94	2.62
C1410-135-6750-S*	3.415	86.73	48.94	217.70	14.67	2.57
C1410-135-7000-S*	3.533	89.74	48.94	217.70	14.12	2.47
C1410-135-7500-S*	3.770	95.77	48.94	217.70	13.12	2.30
C1410-135-8000-S*	4.007	101.79	48.94	217.70	12.26	2.15
C1410-135-8500-S*	4.245	107.81	48.94	217.70	11.50	2.01
C1410-135-9000-S*	4.482	113.84	48.94	217.70	10.83	1.90
C1410-135-9500-S*	4.719	119.86	48.94	217.70	10.24	1.79
C1410-148-2125-S	1.241	31.53	62.52	278.09	70.74	12.38
C1410-148-2250-S	1.306	33.17	62.52	278.09	66.21	11.59
C1410-148-2375-S	1.370	34.81	62.52	278.09	62.23	10.89
C1410-148-2500-S	1.435	36.45	62.52	278.09	58.70	10.27
C1410-148-2625-S	1.500	38.09	62.52	278.09	55.55	9.72
C1410-148-2750-S	1.564	39.73	62.52	278.09	52.72	9.23
C1410-148-2875-S	1.629	41.37	62.52	278.09	50.17	8.78
C1410-148-3000-S	1.693	43.01	62.52	278.09	47.85	8.37
C1410-148-3250-S	1.823	46.29	62.52	278.09	43.80	7.66
C1410-148-3500-S	1.952	49.58	62.52	278.09	40.38	7.07
C1410-148-3750-S	2.081	52.86	62.52	278.09	37.46	6.56
C1410-148-4000-S	2.210	56.14	62.52	278.09	34.93	6.11
C1410-148-4250-S	2.339	59.42	62.52	278.09	32.72	5.73
C1410-148-4500-S	2.469	62.70	62.52	278.09	30.78	5.39
C1410-148-4750-S	2.598	65.98	62.52	278.09	29.05	5.08
C1410-148-5000-S	2.727	69.27	62.52	278.09	27.50	4.81
C1410-148-5250-S	2.856	72.55	62.52	278.09	26.12	4.57

FOR INFORMATION ON ALTERNATIVE FINISHES, SEE PAGE 311

Part Numbers with an "*" are squared and not ground. **Part Numbers in bold** represent the newly expanded Associated Spring RAYMOND compression spring offering.

MUSIC WIRE															STAINLESS STEEL						
Catalog #	Outside Diameter (OD)		Wire Diameter (d)		Free Length (L) Approx		Load Length (L_1)		Solid Height (Sh) Approx		Load (P) at L_1		Spring Rate (R)		Catalog #	Load Length (L_1)		Load (P) at L_1		Spring Rate (R)	
	in	mm	in	mm	in	mm	in	mm	in	mm	lb	N	lb/in	N/mm		in	mm	lb	N	lb/in	N/mm
C1410-148-5500-M	1.410	35.81	0.148	3.76	5.500	139.70	2.586	65.70	2.176	55.27	83.30	370.55	28.59	5.00	**C1410-148-5500-S**	2.985	75.83	62.52	278.09	24.86	4.35
C1410-148-5750-M	1.410	35.81	0.148	3.76	5.750	146.05	2.696	68.49	2.265	57.54	83.30	370.55	27.28	4.77	**C1410-148-5750-S**	3.115	79.11	62.52	278.09	23.72	4.15
C1410-148-6000-M	1.410	35.81	0.148	3.76	6.000	152.40	2.806	71.28	2.355	59.82	83.30	370.55	26.09	4.56	**C1410-148-6000-S**	3.244	82.39	62.52	278.09	22.68	3.97
C1410-148-6250-M	1.410	35.81	0.148	3.76	6.250	158.75	2.917	74.08	2.445	62.09	83.30	370.55	24.99	4.37	**C1410-148-6250-S**	3.373	85.67	62.52	278.09	21.73	3.80
C1410-148-6500-M	1.410	35.81	0.148	3.76	6.500	165.10	3.027	76.87	2.534	64.37	83.30	370.55	23.98	4.20	**C1410-148-6500-S**	3.502	88.96	62.52	278.09	20.85	3.65
C1410-148-6750-M	1.410	35.81	0.148	3.76	6.750	171.45	3.137	79.67	2.624	66.65	83.30	370.55	23.05	4.03	**C1410-148-6750-S**	3.631	92.24	62.52	278.09	20.05	3.51
C1410-148-7000-M*	1.410	35.81	0.148	3.76	7.000	177.80	3.329	84.57	2.816	71.52	83.30	370.55	22.70	3.97	**C1410-148-7000-S***	3.832	97.34	62.52	278.09	19.74	3.45
C1410-148-7500-M*	1.410	35.81	0.148	3.76	7.500	190.50	3.550	90.16	2.995	76.07	83.30	370.55	21.09	3.69	**C1410-148-7500-S***	4.091	103.90	62.52	278.09	18.34	3.21
C1410-148-8000-M*	1.410	35.81	0.148	3.76	8.000	203.20	3.770	95.75	3.174	80.63	83.30	370.55	19.69	3.45	**C1410-148-8000-S***	4.349	110.46	62.52	278.09	17.12	3.00
C1410-148-8500-M*	1.410	35.81	0.148	3.76	8.500	215.90	3.990	101.34	3.353	85.18	83.30	370.55	18.47	3.23	**C1410-148-8500-S***	4.607	117.03	62.52	278.09	16.06	2.81
C1410-148-9000-M*	1.410	35.81	0.148	3.76	9.000	228.60	4.210	106.93	3.533	89.73	83.30	370.55	17.39	3.04	**C1410-148-9000-S***	4.866	123.59	62.52	278.09	15.12	2.65
C1410-148-9500-M*	1.410	35.81	0.148	3.76	9.500	241.30	4.430	112.52	3.712	94.28	83.30	370.55	16.43	2.88	**C1410-148-9500-S***	5.124	130.15	62.52	278.09	14.29	2.50
C1410-162-2000-M	1.410	35.81	0.162	4.12	2.000	50.80	1.140	28.95	1.037	26.35	106.93	475.67	124.30	21.75	**C1410-162-2000-S**	1.265	32.14	79.40	353.17	108.08	18.91
C1410-162-2125-M	1.410	35.81	0.162	4.12	2.125	53.98	1.201	30.49	1.089	27.67	106.93	475.67	115.67	20.24	**C1410-162-2125-S**	1.336	33.93	79.40	353.17	100.58	17.60
C1410-162-2250-M	1.410	35.81	0.162	4.12	2.250	57.15	1.261	32.04	1.141	28.99	106.93	475.67	108.16	18.93	**C1410-162-2250-S**	1.406	35.71	79.40	353.17	94.06	16.46
C1410-162-2375-M	1.410	35.81	0.162	4.12	2.375	60.33	1.322	33.58	1.193	30.31	106.93	475.67	101.57	17.77	**C1410-162-2375-S**	1.476	37.49	79.40	353.17	88.32	15.46
C1410-162-2500-M	1.410	35.81	0.162	4.12	2.500	63.50	1.383	35.13	1.245	31.63	106.93	475.67	95.74	16.75	**C1410-162-2500-S**	1.546	39.28	79.40	353.17	83.25	14.57
C1410-162-2625-M	1.410	35.81	0.162	4.12	2.625	66.68	1.444	36.67	1.297	32.95	106.93	475.67	90.54	15.84	**C1410-162-2625-S**	1.617	41.06	79.40	353.17	78.73	13.78
C1410-162-2750-M	1.410	35.81	0.162	4.12	2.750	69.85	1.505	38.22	1.349	34.27	106.93	475.67	85.87	15.03	**C1410-162-2750-S**	1.687	42.84	79.40	353.17	74.67	13.07
C1410-162-2875-M	1.410	35.81	0.162	4.12	2.875	73.03	1.566	39.76	1.401	35.59	106.93	475.67	81.66	14.29	**C1410-162-2875-S**	1.757	44.63	79.40	353.17	71.01	12.43
C1410-162-3000-M	1.410	35.81	0.162	4.12	3.000	76.20	1.626	41.31	1.453	36.91	106.93	475.67	77.85	13.62	**C1410-162-3000-S**	1.827	46.41	79.40	353.17	67.69	11.85
C1410-162-3250-M	1.410	35.81	0.162	4.12	3.250	82.55	1.748	44.40	1.557	39.55	106.93	475.67	71.20	12.46	**C1410-162-3250-S**	1.968	49.98	79.40	353.17	61.91	10.83
C1410-162-3500-M	1.410	35.81	0.162	4.12	3.500	88.90	1.870	47.49	1.661	42.19	106.93	475.67	65.59	11.48	**C1410-162-3500-S**	2.108	53.54	79.40	353.17	57.04	9.98
C1410-162-3750-M	1.410	35.81	0.162	4.12	3.750	95.25	1.991	50.58	1.765	44.83	106.93	475.67	60.81	10.64	**C1410-162-3750-S**	2.248	57.11	79.40	353.17	52.88	9.25
C1410-162-4000-M	1.410	35.81	0.162	4.12	4.000	101.60	2.113	53.67	1.869	47.47	106.93	475.67	56.67	9.92	**C1410-162-4000-S**	2.389	60.68	79.40	353.17	49.28	8.62
C1410-162-4250-M	1.410	35.81	0.162	4.12	4.250	107.95	2.235	56.76	1.973	50.12	106.93	475.67	53.06	9.29	**C1410-162-4250-S**	2.529	64.24	79.40	353.17	46.14	8.07
C1410-162-4500-M	1.410	35.81	0.162	4.12	4.500	114.30	2.356	59.85	2.077	52.76	106.93	475.67	49.89	8.73	**C1410-162-4500-S**	2.670	67.81	79.40	353.17	43.38	7.59
C1410-162-4750-M	1.410	35.81	0.162	4.12	4.750	120.65	2.478	62.94	2.181	55.40	106.93	475.67	47.07	8.24	**C1410-162-4750-S**	2.810	71.38	79.40	353.17	40.93	7.16
C1410-162-5000-M	1.410	35.81	0.162	4.12	5.000	127.00	2.600	66.03	2.285	58.04	106.93	475.67	44.55	7.80	**C1410-162-5000-S**	2.951	74.94	79.40	353.17	38.74	6.78
C1410-162-5250-M	1.410	35.81	0.162	4.12	5.250	133.35	2.721	69.12	2.389	60.68	106.93	475.67	42.29	7.40	**C1410-162-5250-S**	3.091	78.51	79.40	353.17	36.77	6.44
C1410-162-5500-M	1.410	35.81	0.162	4.12	5.500	139.70	2.843	72.21	2.493	63.32	106.93	475.67	40.25	7.04	**C1410-162-5500-S**	3.231	82.08	79.40	353.17	35.00	6.12
C1410-162-5750-M	1.410	35.81	0.162	4.12	5.750	146.05	2.965	75.30	2.597	65.96	106.93	475.67	38.39	6.72	**C1410-162-5750-S**	3.372	85.65	79.40	353.17	33.39	5.84
C1410-162-6000-M	1.410	35.81	0.162	4.12	6.000	152.40	3.086	78.40	2.701	68.60	106.93	475.67	36.70	6.42	**C1410-162-6000-S**	3.512	89.21	79.40	353.17	31.92	5.59
C1410-162-6250-M	1.410	35.81	0.162	4.12	6.250	158.75	3.208	81.49	2.805	71.24	106.93	475.67	35.15	6.15	**C1410-162-6250-S**	3.653	92.78	79.40	353.17	30.57	5.35
C1410-162-6500-M	1.410	35.81	0.162	4.12	6.500	165.10	3.330	84.58	2.909	73.88	106.93	475.67	33.73	5.90	**C1410-162-6500-S**	3.793	96.35	79.40	353.17	29.33	5.13
C1410-162-6750-M	1.410	35.81	0.162	4.12	6.750	171.45	3.451	87.67	3.013	76.53	106.93	475.67	32.42	5.67	**C1410-162-6750-S**	3.934	99.91	79.40	353.17	28.19	4.93
C1410-162-7000-M	1.410	35.81	0.162	4.12	7.000	177.80	3.573	90.76	3.117	79.17	106.93	475.67	31.21	5.46	**C1410-162-7000-S**	4.074	103.48	79.40	353.17	27.13	4.75
C1410-162-7500-M	1.410	35.81	0.162	4.12	7.500	190.50	3.816	96.94	3.325	84.45	106.93	475.67	29.03	5.08	**C1410-162-7500-S**	4.355	110.61	79.40	353.17	25.24	4.42
C1410-162-8000-M	1.410	35.81	0.162	4.12	8.000	203.20	4.060	103.12	3.533	89.73	106.93	475.67	27.14	4.75	**C1410-162-8000-S**	4.636	117.75	79.40	353.17	23.60	4.13
C1410-162-8500-M	1.410	35.81	0.162	4.12	8.500	215.90	4.303	109.30	3.741	95.01	106.93	475.67	25.48	4.46	**C1410-162-8500-S**	4.917	124.88	79.40	353.17	22.16	3.88
C1410-162-9000-M	1.410	35.81	0.162	4.12	9.000	228.60	4.546	115.48	3.949	100.29	106.93	475.67	24.01	4.20	**C1410-162-9000-S**	5.197	132.01	79.40	353.17	20.88	3.65
C1410-162-9500-M	1.410	35.81	0.162	4.12	9.500	241.30	4.790	121.66	4.157	105.58	106.93	475.67	22.70	3.97	**C1410-162-9500-S**	5.478	139.15	79.40	353.17	19.74	3.45
C1410-177-2000-M	1.410	35.81	0.177	4.50	2.000	50.80	1.235	31.38	1.155	29.35	136.47	607.06	178.48	31.23	**C1410-177-2000-S**	1.355	34.41	100.16	445.55	155.20	27.16
C1410-177-2125-M	1.410	35.81	0.177	4.50	2.125	53.98	1.302	33.08	1.215	30.86	136.47	607.06	165.88	29.03	**C1410-177-2125-S**	1.431	36.34	100.16	445.55	144.25	25.24
C1410-177-2250-M	1.410	35.81	0.177	4.50	2.250	57.15	1.369	34.78	1.274	32.37	136.47	607.06	154.95	27.12	**C1410-177-2250-S**	1.507	38.27	100.16	445.55	134.74	23.58
C1410-177-2375-M	1.410	35.81	0.177	4.50	2.375	60.33	1.436	36.48	1.334	33.88	136.47	607.06	145.36	25.44	**C1410-177-2375-S**	1.583	40.20	100.16	445.55	126.40	22.12
C1410-177-2500-M	1.410	35.81	0.177	4.50	2.500	63.50	1.503	38.18	1.394	35.40	136.47	607.06	136.90	23.96	**C1410-177-2500-S**	1.659	42.13	100.16	445.55	119.04	20.83
C1410-177-2625-M	1.410	35.81	0.177	4.50	2.625	66.68	1.570	39.88	1.453	36.91	136.47	607.06	129.36	22.64	**C1410-177-2625-S**	1.735	44.06	100.16	445.55	112.49	19.69
C1410-177-2750-M	1.410	35.81	0.177	4.50	2.750	69.85	1.637	41.58	1.513	38.42	136.47	607.06	122.61	21.46	**C1410-177-2750-S**	1.811	45.99	100.16	445.55	106.62	18.66
C1410-177-2875-M	1.410	35.81	0.177	4.50	2.875	73.03	1.704	43.28	1.572	39.93	136.47	607.06	116.53	20.39	**C1410-177-2875-S**	1.887	47.92	100.16	445.55	101.33	17.73
C1410-177-3000-M	1.410	35.81	0.177	4.50	3.000	76.20	1.771	44.98	1.632	41.44	136.47	607.06	111.03	19.43	**C1410-177-3000-S**	1.963	49.85	100.16	445.55	96.55	16.90
C1410-177-3250-M	1.410	35.81	0.177	4.50	3.250	82.55	1.905	48.38	1.751	44.47	136.47	607.06	101.44	17.75	**C1410-177-3250-S**	2.115	53.71	100.16	445.55	88.21	15.44
C1410-177-3500-M	1.410	35.81	0.177	4.50	3.500	88.90	2.039	51.78	1.870	47.49	136.47	607.06	93.38	16.34	**C1410-177-3500-S**	2.266	57.57	100.16	445.55	81.20	14.21
C1410-177-3750-M	1.410	35.81	0.177	4.50	3.750	95.25	2.172	55.18	1.989	50.51	136.47	607.06	86.51	15.14	**C1410-177-3750-S**	2.418	61.43	100.16	445.55	75.22	13.16
C1410-177-4000-M	1.410	35.81	0.177	4.50	4.000	101.60	2.306	58.58	2.108	53.54	136.47	607.06	80.58	14.10	**C1410-177-4000-S**	2.570	65.29	100.16	445.55	70.07	12.26
C1410-177-4250-M	1.410	35.81	0.177	4.50	4.250	107.95	2.440	61.98	2.227	56.56	136.47	607.06	75.41	13.20	**C1410-177-4250-S**	2.722	69.15	100.16	445.55	65.57	11.47
C1410-177-4500-M	1.410	35.81	0.177	4.50	4.500	114.30	2.574	65.38	2.346	59.58	136.47	607.06	70.86	12.40	**C1410-177-4500-S**	2.874	73.01	100.16	445.55	61.62	10.78
C1410-177-4750-M	1.410	35.81	0.177	4.50	4.750	120.65	2.708	68.78	2.465	62.61	136.47	607.06	66.83	11.70	**C1410-177-4750-S**	3.026	76.87	100.16	445.55	58.11	10.17
C1410-177-5000-M	1.410	35.81	0.177	4.50	5.000	127.00	2.842	72.18	2.584	65.63	136.47	607.06	63.23	11.07	**C1410-177-5000-S**	3.178	80.73	100.16	445.55	54.99	9.62
C1410-177-5250-M	1.410	35.81	0.177	4.50	5.250	133.35	2.976	75.58	2.703	68.66	136.47	607.06	60.00	10.50	**C1410-177-5250-S**	3.330	84.59	100.16	445.55	52.18	9.13
C1410-177-5500-M	1.410	35.81	0.177	4.50	5.500	139.70	3.109	78.98	2.822	71.68	136.47	607.06	57.09	9.99	**C1410-177-5500-S**	3.482	88.45	100.16	445.55	49.64	8.69
C1410-177-5750-M	1.410	35.81	0.177	4.50	5.750	146.05	3.243	82.38	2.941	74.70	136.47	607.06	54.44	9.53	**C1410-177-5750-S**	3.634	92.31	100.16	445.55	47.34	8.29
C1410-177-6000-M	1.410	35.81	0.177	4.50	6.000	152.40	3.377	85.78	3.060	77.73	136.47	607.06	52.03	9.11	**C1410-177-6000-S**	3.786	96.17	100.16	445.55	45.25	7.92
C1410-177-6250-M	1.410	35.81	0.177	4.50	6.250	158.75	3.511	89.18	3.179	80.75	136.47	607.06	49.83	8.72	**C1410-177-6250-S**	3.938	100.03	100.16	445.55	43.33	7.58

Part Numbers with an "*" are squared and not ground. **Part Numbers in bold** represent the newly expanded Associated Spring RAYMOND compression spring offering.

MUSIC WIRE														
Catalog #	Outside Diameter (OD)		Wire Diameter (d)		Free Length (L) Approx		Load Length (L_1)		Solid Height (Sh) Approx		Load (P) at L_1		Spring Rate (R)	
	in	mm	in	mm	in	mm	in	mm	in	mm	lb	N	lb/in	N/mm
C1410-177-6500-M	1.410	35.81	0.177	4.50	6.500	165.10	3.645	92.58	3.298	83.77	136.47	607.06	47.80	8.37
C1410-177-6750-M	1.410	35.81	0.177	4.50	6.750	171.45	3.779	95.98	3.417	86.80	136.47	607.06	45.93	8.04
C1410-177-7000-M	1.410	35.81	0.177	4.50	7.000	177.80	3.913	99.38	3.536	89.82	136.47	607.06	44.20	7.74
C1410-177-7500-M	1.410	35.81	0.177	4.50	7.500	190.50	4.180	106.18	3.774	95.87	136.47	607.06	41.11	7.19
C1410-177-8000-M	1.410	35.81	0.177	4.50	8.000	203.20	4.448	112.98	4.012	101.92	136.47	607.06	38.42	6.72
C1410-177-8500-M	1.410	35.81	0.177	4.50	8.500	215.90	4.716	119.78	4.250	107.96	136.47	607.06	36.06	6.31
C1410-177-9000-M	1.410	35.81	0.177	4.50	9.000	228.60	4.984	126.58	4.489	114.01	136.47	607.06	33.98	5.95
C1410-177-9500-M	1.410	35.81	0.177	4.50	9.500	241.30	5.251	133.38	4.727	120.06	136.47	607.06	32.12	5.62
C1410-192-2000-M	1.410	35.81	0.192	4.88	2.000	50.80	1.325	33.65	1.266	32.15	170.61	758.91	252.66	44.21
C1410-192-2125-M	1.410	35.81	0.192	4.88	2.125	53.98	1.398	35.50	1.333	33.85	170.61	758.91	234.52	41.04
C1410-192-2250-M	1.410	35.81	0.192	4.88	2.250	57.15	1.470	37.34	1.399	35.54	170.61	758.91	218.81	38.29
C1410-192-2375-M	1.410	35.81	0.192	4.88	2.375	60.33	1.543	39.19	1.466	37.24	170.61	758.91	205.07	35.89
C1410-192-2500-M	1.410	35.81	0.192	4.88	2.500	63.50	1.616	41.04	1.533	38.93	170.61	758.91	192.95	33.77
C1410-192-2625-M	1.410	35.81	0.192	4.88	2.625	66.68	1.689	42.89	1.599	40.63	170.61	758.91	182.19	31.88
C1410-192-2750-M	1.410	35.81	0.192	4.88	2.750	69.85	1.761	44.74	1.666	42.32	170.61	758.91	172.57	30.20
C1410-192-2875-M	1.410	35.81	0.192	4.88	2.875	73.03	1.834	46.59	1.733	44.02	170.61	758.91	163.91	28.68
C1410-192-3000-M	1.410	35.81	0.192	4.88	3.000	76.20	1.907	48.43	1.800	45.71	170.61	758.91	156.07	27.31
C1410-192-3250-M	1.410	35.81	0.192	4.88	3.250	82.55	2.052	52.13	1.933	49.10	170.61	758.91	142.46	24.93
C1410-192-3500-M	1.410	35.81	0.192	4.88	3.500	88.90	2.198	55.83	2.067	52.49	170.61	758.91	131.03	22.93
C1410-192-3750-M	1.410	35.81	0.192	4.88	3.750	95.25	2.343	59.52	2.200	55.88	170.61	758.91	121.30	21.23
C1410-192-4000-M	1.410	35.81	0.192	4.88	4.000	101.60	2.489	63.22	2.333	59.27	170.61	758.91	112.91	19.76
C1410-192-4250-M	1.410	35.81	0.192	4.88	4.250	107.95	2.635	66.92	2.467	62.66	170.61	758.91	105.61	18.48
C1410-192-4500-M	1.410	35.81	0.192	4.88	4.500	114.30	2.780	70.61	2.600	66.05	170.61	758.91	99.20	17.36
C1410-192-4750-M	1.410	35.81	0.192	4.88	4.750	120.65	2.926	74.31	2.734	69.44	170.61	758.91	93.52	16.37
C1410-192-5000-M	1.410	35.81	0.192	4.88	5.000	127.00	3.071	78.01	2.867	72.83	170.61	758.91	88.45	15.48
C1410-192-5250-M	1.410	35.81	0.192	4.88	5.250	133.35	3.217	81.70	3.001	76.22	170.61	758.91	83.91	14.68
C1410-192-5500-M	1.410	35.81	0.192	4.88	5.500	139.70	3.362	85.40	3.134	79.61	170.61	758.91	79.81	13.97
C1410-192-5750-M	1.410	35.81	0.192	4.88	5.750	146.05	3.508	89.10	3.268	83.00	170.61	758.91	76.09	13.32
C1410-192-6000-M	1.410	35.81	0.192	4.88	6.000	152.40	3.653	92.79	3.401	86.39	170.61	758.91	72.70	12.72
C1410-192-6250-M	1.410	35.81	0.192	4.88	6.250	158.75	3.799	96.49	3.535	89.78	170.61	758.91	69.60	12.18
C1410-192-6500-M	1.410	35.81	0.192	4.88	6.500	165.10	3.944	100.19	3.668	93.17	170.61	758.91	66.76	11.68
C1410-192-6750-M	1.410	35.81	0.192	4.88	6.750	171.45	4.090	103.88	3.801	96.56	170.61	758.91	64.14	11.22
C1410-192-7000-M	1.410	35.81	0.192	4.88	7.000	177.80	4.235	107.58	3.935	99.95	170.61	758.91	61.71	10.80
C1410-192-7500-M	1.410	35.81	0.192	4.88	7.500	190.50	4.526	114.97	4.202	106.73	170.61	758.91	57.38	10.04
C1410-192-8000-M	1.410	35.81	0.192	4.88	8.000	203.20	4.818	122.37	4.469	113.51	170.61	758.91	53.61	9.38
C1410-192-8500-M	1.410	35.81	0.192	4.88	8.500	215.90	5.109	129.76	4.736	120.29	170.61	758.91	50.31	8.80
C1410-192-9000-M	1.410	35.81	0.192	4.88	9.000	228.60	5.400	137.15	5.003	127.07	170.61	758.91	47.39	8.29
C1410-192-9500-M	1.410	35.81	0.192	4.88	9.500	241.30	5.691	144.55	5.269	133.84	170.61	758.91	44.79	7.84
C1410-207-2000-M	1.410	35.81	0.207	5.26	2.000	50.80	1.407	35.73	1.367	34.73	209.56	932.17	353.31	61.83
C1410-207-2125-M	1.410	35.81	0.207	5.26	2.125	53.98	1.485	37.72	1.441	36.60	209.56	932.17	327.50	57.31
C1410-207-2250-M	1.410	35.81	0.207	5.26	2.250	57.15	1.563	39.71	1.514	38.46	209.56	932.17	305.20	53.41
C1410-207-2375-M	1.410	35.81	0.207	5.26	2.375	60.33	1.642	41.70	1.588	40.33	209.56	932.17	285.75	50.01
C1410-207-2500-M	1.410	35.81	0.207	5.26	2.500	63.50	1.720	43.68	1.661	42.20	209.56	932.17	268.62	47.01
C1410-207-2625-M	1.410	35.81	0.207	5.26	2.625	66.68	1.798	45.67	1.735	44.06	209.56	932.17	253.44	44.35
C1410-207-2750-M	1.410	35.81	0.207	5.26	2.750	69.85	1.876	47.66	1.808	45.93	209.56	932.17	239.88	41.98
C1410-207-2875-M	1.410	35.81	0.207	5.26	2.875	73.03	1.955	49.65	1.882	47.80	209.56	932.17	227.69	39.85
C1410-207-3000-M	1.410	35.81	0.207	5.26	3.000	76.20	2.033	51.64	1.955	49.67	209.56	932.17	216.69	37.92
C1410-207-3250-M	1.410	35.81	0.207	5.26	3.250	82.55	2.189	55.61	2.102	53.40	209.56	932.17	197.58	34.58
C1410-207-3500-M	1.410	35.81	0.207	5.26	3.500	88.90	2.346	59.59	2.249	57.13	209.56	932.17	181.58	31.78
C1410-207-3750-M	1.410	35.81	0.207	5.26	3.750	95.25	2.502	63.56	2.396	60.87	209.56	932.17	167.97	29.39
C1410-207-4000-M	1.410	35.81	0.207	5.26	4.000	101.60	2.659	67.54	2.543	64.60	209.56	932.17	156.26	27.35
C1410-207-4250-M	1.410	35.81	0.207	5.26	4.250	107.95	2.815	71.51	2.690	68.34	209.56	932.17	146.08	25.56
C1410-207-4500-M	1.410	35.81	0.207	5.26	4.500	114.30	2.972	75.49	2.837	72.07	209.56	932.17	137.14	24.00
C1410-207-4750-M	1.410	35.81	0.207	5.26	4.750	120.65	3.128	79.46	2.984	75.80	209.56	932.17	129.23	22.62
C1410-207-5000-M	1.410	35.81	0.207	5.26	5.000	127.00	3.285	83.44	3.131	79.54	209.56	932.17	122.19	21.38
C1410-207-5250-M	1.410	35.81	0.207	5.26	5.250	133.35	3.441	87.41	3.278	83.27	209.56	932.17	115.87	20.28
C1410-207-5500-M	1.410	35.81	0.207	5.26	5.500	139.70	3.598	91.39	3.425	87.00	209.56	932.17	110.18	19.28
C1410-207-5750-M	1.410	35.81	0.207	5.26	5.750	146.05	3.754	95.36	3.572	90.74	209.56	932.17	105.01	18.38
C1410-207-6000-M	1.410	35.81	0.207	5.26	6.000	152.40	3.911	99.34	3.719	94.47	209.56	932.17	100.31	17.55
C1410-207-6250-M	1.410	35.81	0.207	5.26	6.250	158.75	4.067	103.31	3.866	98.21	209.56	932.17	96.02	16.80
C1410-207-6500-M	1.410	35.81	0.207	5.26	6.500	165.10	4.224	107.29	4.013	101.94	209.56	932.17	92.07	16.11
C1410-207-6750-M	1.410	35.81	0.207	5.26	6.750	171.45	4.380	111.26	4.160	105.67	209.56	932.17	88.44	15.48
C1410-207-7000-M	1.410	35.81	0.207	5.26	7.000	177.80	4.537	115.24	4.307	109.41	209.56	932.17	85.08	14.89
C1410-207-7500-M	1.410	35.81	0.207	5.26	7.500	190.50	4.850	123.19	4.601	116.88	209.56	932.17	79.08	13.84

STAINLESS STEEL						
Catalog #	Load Length (L_1)		Load (P) at L_1		Spring Rate (R)	
	in	mm	lb	N	lb/in	N/mm
C1410-177-6500-S	4.090	103.89	100.16	445.55	41.57	7.27
C1410-177-6750-S	4.242	107.75	100.16	445.55	39.94	6.99
C1410-177-7000-S	4.394	111.61	100.16	445.55	38.44	6.73
C1410-177-7500-S	4.698	119.33	100.16	445.55	35.75	6.26
C1410-177-8000-S	5.002	127.05	100.16	445.55	33.41	5.85
C1410-177-8500-S	5.306	134.77	100.16	445.55	31.36	5.49
C1410-177-9000-S	5.610	142.49	100.16	445.55	29.55	5.17
C1410-177-9500-S	5.914	150.21	100.16	445.55	27.93	4.89
C1410-192-2000-S	1.437	36.49	123.79	550.63	219.70	38.45
C1410-192-2125-S	1.518	38.56	123.79	550.63	203.93	35.69
C1410-192-2250-S	1.599	40.62	123.79	550.63	190.27	33.30
C1410-192-2375-S	1.681	42.69	123.79	550.63	178.32	31.21
C1410-192-2500-S	1.762	44.76	123.79	550.63	167.79	29.36
C1410-192-2625-S	1.844	46.83	123.79	550.63	158.43	27.72
C1410-192-2750-S	1.925	48.90	123.79	550.63	150.06	26.26
C1410-192-2875-S	2.006	50.96	123.79	550.63	142.53	24.94
C1410-192-3000-S	2.088	53.03	123.79	550.63	135.72	23.75
C1410-192-3250-S	2.251	57.17	123.79	550.63	123.88	21.68
C1410-192-3500-S	2.414	61.30	123.79	550.63	113.94	19.94
C1410-192-3750-S	2.576	65.44	123.79	550.63	105.48	18.46
C1410-192-4000-S	2.739	69.58	123.79	550.63	98.18	17.18
C1410-192-4250-S	2.902	73.71	123.79	550.63	91.84	16.07
C1410-192-4500-S	3.065	77.85	123.79	550.63	86.26	15.09
C1410-192-4750-S	3.228	81.99	123.79	550.63	81.32	14.23
C1410-192-5000-S	3.391	86.12	123.79	550.63	76.91	13.46
C1410-192-5250-S	3.553	90.26	123.79	550.63	72.96	12.77
C1410-192-5500-S	3.716	94.39	123.79	550.63	69.40	12.14
C1410-192-5750-S	3.879	98.53	123.79	550.63	66.16	11.58
C1410-192-6000-S	4.042	102.67	123.79	550.63	63.22	11.06
C1410-192-6250-S	4.205	106.80	123.79	550.63	60.52	10.59
C1410-192-6500-S	4.368	110.94	123.79	550.63	58.05	10.16
C1410-192-6750-S	4.530	115.07	123.79	550.63	55.77	9.76
C1410-192-7000-S	4.693	119.21	123.79	550.63	53.66	9.39
C1410-192-7500-S	5.019	127.48	123.79	550.63	49.89	8.73
C1410-192-8000-S	5.345	135.75	123.79	550.63	46.62	8.16
C1410-192-8500-S	5.670	144.03	123.79	550.63	43.75	7.66
C1410-192-9000-S	5.996	152.30	123.79	550.63	41.21	7.21
C1410-192-9500-S	6.322	160.57	123.79	550.63	38.95	6.82
C1410-207-2000-S	1.511	38.37	150.32	668.66	307.23	53.76
C1410-207-2125-S	1.597	40.57	150.32	668.66	284.78	49.84
C1410-207-2250-S	1.684	42.76	150.32	668.66	265.39	46.44
C1410-207-2375-S	1.770	44.96	150.32	668.66	248.48	43.48
C1410-207-2500-S	1.856	47.15	150.32	668.66	233.59	40.88
C1410-207-2625-S	1.943	49.35	150.32	668.66	220.38	38.57
C1410-207-2750-S	2.029	51.55	150.32	668.66	208.59	36.50
C1410-207-2875-S	2.116	53.74	150.32	668.66	197.99	34.65
C1410-207-3000-S	2.202	55.94	150.32	668.66	188.42	32.97
C1410-207-3250-S	2.375	60.33	150.32	668.66	171.81	30.07
C1410-207-3500-S	2.548	64.72	150.32	668.66	157.89	27.63
C1410-207-3750-S	2.721	69.11	150.32	668.66	146.06	25.56
C1410-207-4000-S	2.894	73.50	150.32	668.66	135.88	23.78
C1410-207-4250-S	3.067	77.89	150.32	668.66	127.02	22.23
C1410-207-4500-S	3.239	82.28	150.32	668.66	119.25	20.87
C1410-207-4750-S	3.412	86.67	150.32	668.66	112.38	19.67
C1410-207-5000-S	3.585	91.06	150.32	668.66	106.25	18.59
C1410-207-5250-S	3.758	95.46	150.32	668.66	100.76	17.63
C1410-207-5500-S	3.931	99.85	150.32	668.66	95.80	16.77
C1410-207-5750-S	4.104	104.24	150.32	668.66	91.32	15.98
C1410-207-6000-S	4.277	108.63	150.32	668.66	87.23	15.27
C1410-207-6250-S	4.450	113.02	150.32	668.66	83.49	14.61
C1410-207-6500-S	4.622	117.41	150.32	668.66	80.06	14.01
C1410-207-6750-S	4.795	121.80	150.32	668.66	76.90	13.46
C1410-207-7000-S	4.968	126.19	150.32	668.66	73.98	12.95
C1410-207-7500-S	5.314	134.97	150.32	668.66	68.76	12.03

FOR INFORMATION ON ALTERNATIVE FINISHES, SEE PAGE 311

Part Numbers with an "*" are squared and not ground. **Part Numbers in bold** represent the newly expanded Associated Spring RAYMOND compression spring offering.

MUSIC WIRE

Catalog #	Outside Diameter (OD)		Wire Diameter (d)		Free Length (L) Approx		Load Length (L_1)		Solid Height (Sh) Approx		Load (P) at L_1		Spring Rate (R)	
	in	mm	in	mm	in	mm	in	mm	in	mm	lb	N	lb/in	N/mm
C1410-207-8000-M	**1.410**	**35.81**	**0.207**	**5.26**	**8.000**	**203.20**	**5.163**	**131.14**	**4.895**	**124.34**	**209.56**	**932.17**	**73.87**	**12.93**
C1410-207-8500-M	**1.410**	**35.81**	**0.207**	**5.26**	**8.500**	**215.90**	**5.476**	**139.09**	**5.189**	**131.81**	**209.56**	**932.17**	**69.30**	**12.13**
C1410-207-9000-M	**1.410**	**35.81**	**0.207**	**5.26**	**9.000**	**228.60**	**5.789**	**147.04**	**5.483**	**139.28**	**209.56**	**932.17**	**65.26**	**11.42**
C1410-207-9500-M	**1.410**	**35.81**	**0.207**	**5.26**	**9.500**	**241.30**	**6.102**	**154.99**	**5.777**	**146.75**	**209.56**	**932.17**	**61.67**	**10.79**
C1410-225-2000-M	**1.410**	**35.81**	**0.225**	**5.72**	**2.000**	**50.80**	**1.495**	**37.98**	**1.477**	**37.50**	**262.92**	**1169.53**	**520.95**	**91.17**
C1410-225-2125-M	**1.410**	**35.81**	**0.225**	**5.72**	**2.125**	**53.98**	**1.580**	**40.12**	**1.558**	**39.56**	**262.92**	**1169.53**	**482.07**	**84.36**
C1410-225-2250-M	**1.410**	**35.81**	**0.225**	**5.72**	**2.250**	**57.15**	**1.664**	**42.26**	**1.639**	**41.62**	**262.92**	**1169.53**	**448.60**	**78.50**
C1410-225-2375-M	**1.410**	**35.81**	**0.225**	**5.72**	**2.375**	**60.33**	**1.748**	**44.40**	**1.719**	**43.67**	**262.92**	**1169.53**	**419.47**	**73.41**
C1410-225-2500-M	**1.410**	**35.81**	**0.225**	**5.72**	**2.500**	**63.50**	**1.833**	**46.55**	**1.800**	**45.73**	**262.92**	**1169.53**	**393.89**	**68.93**
C1410-225-2625-M	**1.410**	**35.81**	**0.225**	**5.72**	**2.625**	**66.68**	**1.917**	**48.69**	**1.881**	**47.79**	**262.92**	**1169.53**	**371.25**	**64.97**
C1410-225-2750-M	**1.410**	**35.81**	**0.225**	**5.72**	**2.750**	**69.85**	**2.001**	**50.83**	**1.962**	**49.84**	**262.92**	**1169.53**	**351.08**	**61.44**
C1410-225-2875-M	**1.410**	**35.81**	**0.225**	**5.72**	**2.875**	**73.03**	**2.085**	**52.97**	**2.043**	**51.90**	**262.92**	**1169.53**	**332.98**	**58.27**
C1410-225-3000-M	**1.410**	**35.81**	**0.225**	**5.72**	**3.000**	**76.20**	**2.170**	**55.11**	**2.124**	**53.96**	**262.92**	**1169.53**	**316.66**	**55.41**
C1410-225-3250-M	**1.410**	**35.81**	**0.225**	**5.72**	**3.250**	**82.55**	**2.338**	**59.39**	**2.286**	**58.07**	**262.92**	**1169.53**	**288.38**	**50.47**
C1410-225-3500-M	**1.410**	**35.81**	**0.225**	**5.72**	**3.500**	**88.90**	**2.507**	**63.68**	**2.448**	**62.18**	**262.92**	**1169.53**	**264.75**	**46.33**
C1410-225-3750-M	**1.410**	**35.81**	**0.225**	**5.72**	**3.750**	**95.25**	**2.675**	**67.96**	**2.610**	**66.30**	**262.92**	**1169.53**	**244.69**	**42.82**
C1410-225-4000-M	**1.410**	**35.81**	**0.225**	**5.72**	**4.000**	**101.60**	**2.844**	**72.24**	**2.772**	**70.41**	**262.92**	**1169.53**	**227.46**	**39.80**
C1410-225-4250-M	**1.410**	**35.81**	**0.225**	**5.72**	**4.250**	**107.95**	**3.013**	**76.52**	**2.934**	**74.53**	**262.92**	**1169.53**	**212.49**	**37.19**
C1410-225-4500-M	**1.410**	**35.81**	**0.225**	**5.72**	**4.500**	**114.30**	**3.181**	**80.80**	**3.096**	**78.64**	**262.92**	**1169.53**	**199.38**	**34.89**
C1410-225-4750-M	**1.410**	**35.81**	**0.225**	**5.72**	**4.750**	**120.65**	**3.350**	**85.09**	**3.258**	**82.75**	**262.92**	**1169.53**	**187.79**	**32.86**
C1410-225-5000-M	**1.410**	**35.81**	**0.225**	**5.72**	**5.000**	**127.00**	**3.518**	**89.37**	**3.420**	**86.87**	**262.92**	**1169.53**	**177.47**	**31.06**
C1410-225-5250-M	**1.410**	**35.81**	**0.225**	**5.72**	**5.250**	**133.35**	**3.687**	**93.65**	**3.582**	**90.98**	**262.92**	**1169.53**	**168.22**	**29.44**
C1410-225-5500-M	**1.410**	**35.81**	**0.225**	**5.72**	**5.500**	**139.70**	**3.856**	**97.93**	**3.744**	**95.09**	**262.92**	**1169.53**	**159.90**	**27.98**
C1410-225-5750-M	**1.410**	**35.81**	**0.225**	**5.72**	**5.750**	**146.05**	**4.024**	**102.22**	**3.906**	**99.21**	**262.92**	**1169.53**	**152.35**	**26.66**
C1410-225-6000-M	**1.410**	**35.81**	**0.225**	**5.72**	**6.000**	**152.40**	**4.193**	**106.50**	**4.068**	**103.32**	**262.92**	**1169.53**	**145.49**	**25.46**
C1410-225-6250-M	**1.410**	**35.81**	**0.225**	**5.72**	**6.250**	**158.75**	**4.361**	**110.78**	**4.230**	**107.43**	**262.92**	**1169.53**	**139.22**	**24.36**
C1410-225-6500-M	**1.410**	**35.81**	**0.225**	**5.72**	**6.500**	**165.10**	**4.530**	**115.06**	**4.392**	**111.55**	**262.92**	**1169.53**	**133.47**	**23.36**
C1410-225-6750-M	**1.410**	**35.81**	**0.225**	**5.72**	**6.750**	**171.45**	**4.699**	**119.35**	**4.554**	**115.66**	**262.92**	**1169.53**	**128.17**	**22.43**
C1410-225-7000-M	**1.410**	**35.81**	**0.225**	**5.72**	**7.000**	**177.80**	**4.867**	**123.63**	**4.715**	**119.77**	**262.92**	**1169.53**	**123.28**	**21.57**
C1410-225-7500-M	**1.410**	**35.81**	**0.225**	**5.72**	**7.500**	**190.50**	**5.204**	**132.19**	**5.039**	**128.00**	**262.92**	**1169.53**	**114.54**	**20.04**
C1410-225-8000-M	**1.410**	**35.81**	**0.225**	**5.72**	**8.000**	**203.20**	**5.542**	**140.76**	**5.363**	**136.23**	**262.92**	**1169.53**	**106.95**	**18.72**
C1410-225-8500-M	**1.410**	**35.81**	**0.225**	**5.72**	**8.500**	**215.90**	**5.879**	**149.32**	**5.687**	**144.45**	**262.92**	**1169.53**	**100.31**	**17.55**
C1410-225-9000-M	**1.410**	**35.81**	**0.225**	**5.72**	**9.000**	**228.60**	**6.216**	**157.89**	**6.011**	**152.68**	**262.92**	**1169.53**	**94.44**	**16.53**
C1410-225-9500-M	**1.410**	**35.81**	**0.225**	**5.72**	**9.500**	**241.30**	**6.553**	**166.45**	**6.335**	**160.91**	**262.92**	**1169.53**	**89.22**	**15.61**
C1410-250-2000-M	**1.410**	**35.81**	**0.250**	**6.35**	**2.000**	**50.80**	**1.665**	**42.29**	**1.606**	**40.79**	**292.69**	**1301.93**	**873.67**	**152.89**
C1410-250-2125-M	**1.410**	**35.81**	**0.250**	**6.35**	**2.125**	**53.98**	**1.760**	**44.71**	**1.696**	**43.08**	**294.11**	**1308.28**	**806.47**	**141.13**
C1410-250-2250-M	**1.410**	**35.81**	**0.250**	**6.35**	**2.250**	**57.15**	**1.856**	**47.13**	**1.786**	**45.36**	**295.34**	**1313.73**	**748.86**	**131.05**
C1410-250-2375-M	**1.410**	**35.81**	**0.250**	**6.35**	**2.375**	**60.33**	**1.951**	**49.55**	**1.876**	**47.65**	**296.40**	**1318.45**	**698.94**	**122.31**
C1410-250-2500-M	**1.410**	**35.81**	**0.250**	**6.35**	**2.500**	**63.50**	**1.967**	**49.95**	**1.966**	**49.94**	**349.47**	**1554.54**	**655.25**	**114.67**
C1410-250-2625-M	**1.410**	**35.81**	**0.250**	**6.35**	**2.625**	**66.68**	**2.058**	**52.28**	**2.056**	**52.23**	**349.47**	**1554.54**	**616.71**	**107.92**
C1410-250-2750-M	**1.410**	**35.81**	**0.250**	**6.35**	**2.750**	**69.85**	**2.150**	**54.61**	**2.146**	**54.52**	**349.47**	**1554.54**	**582.45**	**101.93**
C1410-250-2875-M	**1.410**	**35.81**	**0.250**	**6.35**	**2.875**	**73.03**	**2.242**	**56.94**	**2.236**	**56.80**	**349.47**	**1554.54**	**551.79**	**96.56**
C1410-250-3000-M	**1.410**	**35.81**	**0.250**	**6.35**	**3.000**	**76.20**	**2.333**	**59.27**	**2.326**	**59.09**	**349.47**	**1554.54**	**524.20**	**91.74**
C1410-250-3250-M	**1.410**	**35.81**	**0.250**	**6.35**	**3.250**	**82.55**	**2.517**	**63.92**	**2.507**	**63.67**	**349.47**	**1554.54**	**476.55**	**83.40**
C1410-250-3500-M	**1.410**	**35.81**	**0.250**	**6.35**	**3.500**	**88.90**	**2.700**	**68.58**	**2.687**	**68.24**	**349.47**	**1554.54**	**436.84**	**76.45**
C1410-250-3750-M	**1.410**	**35.81**	**0.250**	**6.35**	**3.750**	**95.25**	**2.883**	**73.24**	**2.867**	**72.82**	**349.47**	**1554.54**	**403.23**	**70.57**
C1410-250-4000-M	**1.410**	**35.81**	**0.250**	**6.35**	**4.000**	**101.60**	**3.067**	**77.89**	**3.047**	**77.39**	**349.47**	**1554.54**	**374.43**	**65.53**
C1410-250-4250-M	**1.410**	**35.81**	**0.250**	**6.35**	**4.250**	**107.95**	**3.250**	**82.55**	**3.227**	**81.97**	**349.47**	**1554.54**	**349.47**	**61.16**
C1410-250-4500-M	**1.410**	**35.81**	**0.250**	**6.35**	**4.500**	**114.30**	**3.433**	**87.21**	**3.407**	**86.55**	**349.47**	**1554.54**	**327.63**	**57.33**
C1410-250-4750-M	**1.410**	**35.81**	**0.250**	**6.35**	**4.750**	**120.65**	**3.617**	**91.86**	**3.587**	**91.12**	**349.47**	**1554.54**	**308.36**	**53.96**
C1410-250-5000-M	**1.410**	**35.81**	**0.250**	**6.35**	**5.000**	**127.00**	**3.800**	**96.52**	**3.768**	**95.70**	**349.47**	**1554.54**	**291.22**	**50.96**
C1410-250-5250-M	**1.410**	**35.81**	**0.250**	**6.35**	**5.250**	**133.35**	**3.983**	**101.18**	**3.948**	**100.27**	**349.47**	**1554.54**	**275.90**	**48.28**
C1410-250-5500-M	**1.410**	**35.81**	**0.250**	**6.35**	**5.500**	**139.70**	**4.167**	**105.83**	**4.128**	**104.85**	**349.47**	**1554.54**	**262.10**	**45.87**
C1410-250-5750-M	**1.410**	**35.81**	**0.250**	**6.35**	**5.750**	**146.05**	**4.350**	**110.49**	**4.308**	**109.42**	**349.47**	**1554.54**	**249.62**	**43.68**
C1410-250-6000-M	**1.410**	**35.81**	**0.250**	**6.35**	**6.000**	**152.40**	**4.533**	**115.15**	**4.488**	**114.00**	**349.47**	**1554.54**	**238.27**	**41.70**
C1410-250-6250-M	**1.410**	**35.81**	**0.250**	**6.35**	**6.250**	**158.75**	**4.717**	**119.80**	**4.668**	**118.58**	**349.47**	**1554.54**	**227.91**	**39.88**
C1410-250-6500-M	**1.410**	**35.81**	**0.250**	**6.35**	**6.500**	**165.10**	**4.900**	**124.46**	**4.848**	**123.15**	**349.47**	**1554.54**	**218.42**	**38.22**
C1410-250-6750-M	**1.410**	**35.81**	**0.250**	**6.35**	**6.750**	**171.45**	**5.083**	**129.12**	**5.029**	**127.73**	**349.47**	**1554.54**	**209.68**	**36.69**
C1410-250-7000-M	**1.410**	**35.81**	**0.250**	**6.35**	**7.000**	**177.80**	**5.267**	**133.77**	**5.209**	**132.30**	**349.47**	**1554.54**	**201.62**	**35.28**
C1410-250-7500-M	**1.410**	**35.81**	**0.250**	**6.35**	**7.500**	**190.50**	**5.633**	**143.09**	**5.569**	**141.45**	**349.47**	**1554.54**	**187.22**	**32.76**
C1410-250-8000-M	**1.410**	**35.81**	**0.250**	**6.35**	**8.000**	**203.20**	**6.000**	**152.40**	**5.929**	**150.61**	**349.47**	**1554.54**	**174.73**	**30.58**
C1410-250-8500-M	**1.410**	**35.81**	**0.250**	**6.35**	**8.500**	**215.90**	**6.367**	**161.71**	**6.290**	**159.76**	**349.47**	**1554.54**	**163.81**	**28.67**
C1410-250-9000-M	**1.410**	**35.81**	**0.250**	**6.35**	**9.000**	**228.60**	**6.733**	**171.03**	**6.650**	**168.91**	**349.47**	**1554.54**	**154.18**	**26.98**
C1410-250-9500-M	**1.410**	**35.81**	**0.250**	**6.35**	**9.500**	**241.30**	**7.100**	**180.34**	**7.010**	**178.06**	**349.47**	**1554.54**	**145.61**	**25.48**

STAINLESS STEEL

Catalog #	Load Length (L_1)		Load (P) at L_1		Spring Rate (R)	
	in	mm	lb	N	lb/in	N/mm
C1410-207-8000-S	**5.660**	**143.76**	**150.32**	**668.66**	**64.23**	**11.24**
C1410-207-8500-S	**6.005**	**152.54**	**150.32**	**668.66**	**60.26**	**10.55**
C1410-207-9000-S	**6.351**	**161.32**	**150.32**	**668.66**	**56.75**	**9.93**
C1410-207-9500-S	**6.697**	**170.10**	**150.32**	**668.66**	**53.63**	**9.38**
C1410-225-2000-S	**1.589**	**40.37**	**186.06**	**827.62**	**453.00**	**79.28**
C1410-225-2125-S	**1.681**	**42.70**	**186.06**	**827.62**	**419.20**	**73.36**
C1410-225-2250-S	**1.773**	**45.04**	**186.06**	**827.62**	**390.08**	**68.26**
C1410-225-2375-S	**1.865**	**47.37**	**186.06**	**827.62**	**364.75**	**63.83**
C1410-225-2500-S	**1.957**	**49.70**	**186.06**	**827.62**	**342.51**	**59.94**
C1410-225-2625-S	**2.049**	**52.04**	**186.06**	**827.62**	**322.83**	**56.49**
C1410-225-2750-S	**2.141**	**54.37**	**186.06**	**827.62**	**305.28**	**53.42**
C1410-225-2875-S	**2.232**	**56.70**	**186.06**	**827.62**	**289.55**	**50.67**
C1410-225-3000-S	**2.324**	**59.04**	**186.06**	**827.62**	**275.35**	**48.19**
C1410-225-3250-S	**2.508**	**63.70**	**186.06**	**827.62**	**250.77**	**43.88**
C1410-225-3500-S	**2.692**	**68.37**	**186.06**	**827.62**	**230.21**	**40.29**
C1410-225-3750-S	**2.876**	**73.04**	**186.06**	**827.62**	**212.77**	**37.24**
C1410-225-4000-S	**3.059**	**77.71**	**186.06**	**827.62**	**197.79**	**34.61**
C1410-225-4250-S	**3.243**	**82.37**	**186.06**	**827.62**	**184.78**	**32.34**
C1410-225-4500-S	**3.427**	**87.04**	**186.06**	**827.62**	**173.37**	**30.34**
C1410-225-4750-S	**3.611**	**91.71**	**186.06**	**827.62**	**163.29**	**28.58**
C1410-225-5000-S	**3.794**	**96.38**	**186.06**	**827.62**	**154.32**	**27.01**
C1410-225-5250-S	**3.978**	**101.04**	**186.06**	**827.62**	**146.28**	**25.60**
C1410-225-5500-S	**4.162**	**105.71**	**186.06**	**827.62**	**139.04**	**24.33**
C1410-225-5750-S	**4.346**	**110.38**	**186.06**	**827.62**	**132.48**	**23.18**
C1410-225-6000-S	**4.529**	**115.05**	**186.06**	**827.62**	**126.51**	**22.14**
C1410-225-6250-S	**4.713**	**119.71**	**186.06**	**827.62**	**121.06**	**21.19**
C1410-225-6500-S	**4.897**	**124.38**	**186.06**	**827.62**	**116.06**	**20.31**
C1410-225-6750-S	**5.081**	**129.05**	**186.06**	**827.62**	**111.45**	**19.50**
C1410-225-7000-S	**5.264**	**133.71**	**186.06**	**827.62**	**107.20**	**18.76**
C1410-225-7500-S	**5.632**	**143.05**	**186.06**	**827.62**	**99.60**	**17.43**
C1410-225-8000-S	**5.999**	**152.38**	**186.06**	**827.62**	**93.00**	**16.28**
C1410-225-8500-S	**6.367**	**161.72**	**186.06**	**827.62**	**87.22**	**15.26**
C1410-225-9000-S	**6.734**	**171.05**	**186.06**	**827.62**	**82.12**	**14.37**
C1410-225-9500-S	**7.102**	**180.39**	**186.06**	**827.62**	**77.59**	**13.58**
C1410-250-2000-S	**1.680**	**42.68**	**242.78**	**1079.93**	**759.71**	**132.95**
C1410-250-2125-S	**1.779**	**45.18**	**242.78**	**1079.93**	**701.28**	**122.72**
C1410-250-2250-S	**1.877**	**47.68**	**242.78**	**1079.93**	**651.18**	**113.96**
C1410-250-2375-S	**1.976**	**50.18**	**242.78**	**1079.93**	**607.77**	**106.36**
C1410-250-2500-S	**2.074**	**52.68**	**242.78**	**1079.93**	**569.79**	**99.71**
C1410-250-2625-S	**2.172**	**55.18**	**242.78**	**1079.93**	**536.27**	**93.85**
C1410-250-2750-S	**2.271**	**57.67**	**242.78**	**1079.93**	**506.48**	**88.63**
C1410-250-2875-S	**2.369**	**60.17**	**242.78**	**1079.93**	**479.82**	**83.97**
C1410-250-3000-S	**2.467**	**62.67**	**242.78**	**1079.93**	**455.83**	**79.77**
C1410-250-3250-S	**2.664**	**67.67**	**242.78**	**1079.93**	**414.39**	**72.52**
C1410-250-3500-S	**2.861**	**72.67**	**242.78**	**1079.93**	**379.86**	**66.47**
C1410-250-3750-S	**3.058**	**77.66**	**242.78**	**1079.93**	**350.64**	**61.36**
C1410-250-4000-S	**3.254**	**82.66**	**242.78**	**1079.93**	**325.59**	**56.98**
C1410-250-4250-S	**3.451**	**87.66**	**242.78**	**1079.93**	**303.89**	**53.18**
C1410-250-4500-S	**3.648**	**92.65**	**242.78**	**1079.93**	**284.89**	**49.86**
C1410-250-4750-S	**3.845**	**97.65**	**242.78**	**1079.93**	**268.13**	**46.92**
C1410-250-5000-S	**4.041**	**102.65**	**242.78**	**1079.93**	**253.24**	**44.32**
C1410-250-5250-S	**4.238**	**107.65**	**242.78**	**1079.93**	**239.91**	**41.98**
C1410-250-5500-S	**4.435**	**112.64**	**242.78**	**1079.93**	**227.91**	**39.88**
C1410-250-5750-S	**4.632**	**117.64**	**242.78**	**1079.93**	**217.06**	**37.99**
C1410-250-6000-S	**4.828**	**122.64**	**242.78**	**1079.93**	**207.20**	**36.26**
C1410-250-6250-S	**5.025**	**127.64**	**242.78**	**1079.93**	**198.19**	**34.68**
C1410-250-6500-S	**5.222**	**132.63**	**242.78**	**1079.93**	**189.93**	**33.24**
C1410-250-6750-S	**5.418**	**137.63**	**242.78**	**1079.93**	**182.33**	**31.91**
C1410-250-7000-S	**5.615**	**142.63**	**242.78**	**1079.93**	**175.32**	**30.68**
C1410-250-7500-S	**6.009**	**152.62**	**242.78**	**1079.93**	**162.80**	**28.49**
C1410-250-8000-S	**6.402**	**162.62**	**242.78**	**1079.93**	**151.94**	**26.59**
C1410-250-8500-S	**6.796**	**172.61**	**242.78**	**1079.93**	**142.45**	**24.93**
C1410-250-9000-S	**7.189**	**182.60**	**242.78**	**1079.93**	**134.07**	**23.46**
C1410-250-9500-S	**7.583**	**192.60**	**242.78**	**1079.93**	**126.62**	**22.16**

Part Numbers with an "*" are squared and not ground. **Part Numbers in bold** represent the newly expanded Associated Spring RAYMOND compression spring offering.

MUSIC WIRE														
Catalog #	Outside Diameter (OD)		Wire Diameter (d)		Free Length (L) Approx		Load Length (L_1)		Solid Height (Sh) Approx		Load (P) at L_1		Spring Rate (R)	
	in	mm	in	mm	in	mm	in	mm	in	mm	lb	N	lb/in	N/mm
D13630	1.417	36.00	0.157	4.00	2.106	53.50	0.945	24.00	0.866	22.00	149.69	665.87	130.00	22.75
D13640	1.417	36.00	0.157	4.00	3.130	79.50	1.311	33.30	1.181	30.00	149.69	665.87	82.40	14.42
D13650	1.417	36.00	0.157	4.00	4.724	120.00	1.858	47.20	1.654	42.00	149.69	665.87	53.43	9.35
D13660	1.417	36.00	0.157	4.00	6.693	170.00	2.591	65.80	2.283	58.00	149.69	665.87	36.29	6.35
D13670	1.417	36.00	0.157	4.00	9.843	250.00	3.685	93.60	3.228	82.00	149.69	665.87	24.57	4.30
D13830	1.457	37.00	0.197	5.00	2.008	51.00	1.130	28.70	1.083	27.50	275.58	1225.83	316.63	55.41
D13840	1.457	37.00	0.197	5.00	2.953	75.00	1.583	40.20	1.476	37.50	275.58	1225.83	201.71	35.30
D13850	1.457	37.00	0.197	5.00	4.331	110.00	2.264	57.50	2.067	52.50	275.58	1225.83	130.57	22.85
D13860	1.457	37.00	0.197	5.00	6.299	160.00	3.169	80.50	2.854	72.50	275.58	1225.83	88.51	15.49
D13870	1.457	37.00	0.197	5.00	9.055	230.00	4.528	115.00	4.035	102.50	275.58	1225.83	59.94	10.49
C1460-112-1500-M	1.460	37.08	0.112	2.85	1.500	38.10	0.864	21.95	0.531	13.49	26.23	116.68	41.30	7.23
C1460-112-2000-M	1.460	37.08	0.112	2.85	2.000	50.80	1.115	28.32	0.629	15.98	26.23	116.68	29.60	5.18
C1460-112-2500-M	1.460	37.08	0.112	2.85	2.500	63.50	1.366	34.70	0.727	18.47	26.23	116.68	23.10	4.04
C1460-112-3000-M	1.460	37.08	0.112	2.85	3.000	76.20	1.617	41.07	0.825	20.96	26.23	116.68	19.00	3.33
C1460-112-3500-M	1.460	37.08	0.112	2.85	3.500	88.90	1.868	47.45	0.924	23.47	26.23	116.68	16.10	2.82
C1460-112-4000-M	1.460	37.08	0.112	2.85	4.000	101.60	2.119	53.82	1.022	25.96	26.23	116.68	13.90	2.43
C1460-125-1500-M	1.460	37.08	0.125	3.18	1.500	38.10	0.913	23.19	0.616	15.65	35.61	158.40	60.70	10.62
C1460-125-2000-M	1.460	37.08	0.125	3.18	2.000	50.80	1.179	29.95	0.738	18.75	35.61	158.40	43.40	7.60
C1460-125-2500-M	1.460	37.08	0.125	3.18	2.500	63.50	1.444	36.68	0.859	21.82	35.61	158.40	33.70	5.90
C1460-125-3000-M	1.460	37.08	0.125	3.18	3.000	76.20	1.709	43.41	0.981	24.92	35.61	158.40	27.60	4.83
C1460-125-3500-M	1.460	37.08	0.125	3.18	3.500	88.90	1.975	50.17	1.102	27.99	35.61	158.40	23.30	4.08
C1460-125-4000-M	1.460	37.08	0.125	3.18	4.000	101.60	2.240	56.90	1.224	31.09	35.61	158.40	20.20	3.54
C1460-135-1500-M	1.460	37.08	0.135	3.43	1.500	38.10	0.951	24.16	0.682	17.32	44.09	196.12	80.30	14.05
C1460-135-2000-M	1.460	37.08	0.135	3.43	2.000	50.80	1.228	31.19	0.823	20.90	44.09	196.12	57.10	9.99
C1460-135-2500-M	1.460	37.08	0.135	3.43	2.500	63.50	1.505	38.23	0.963	24.46	44.09	196.12	44.30	7.75
C1460-135-3000-M	1.460	37.08	0.135	3.43	3.000	76.20	1.782	45.26	1.103	28.02	44.09	196.12	36.20	6.34
C1460-135-3500-M	1.460	37.08	0.135	3.43	3.500	88.90	2.059	52.30	1.243	31.57	44.09	196.12	30.60	5.36
C1460-135-4000-M	1.460	37.08	0.135	3.43	4.000	101.60	2.336	59.33	1.393	35.38	44.09	196.12	26.50	4.64
C1460-148-1500-M	1.460	37.08	0.148	3.76	1.500	38.10	1.000	25.40	0.768	19.51	56.86	252.93	113.70	19.90
C1460-148-2000-M	1.460	37.08	0.148	3.76	2.000	50.80	1.292	32.82	0.933	23.70	56.86	252.93	80.30	14.05
C1460-148-2500-M	1.460	37.08	0.148	3.76	2.500	63.50	1.585	40.26	1.098	27.89	56.86	252.93	62.10	10.87
C1460-148-3000-M	1.460	37.08	0.148	3.76	3.000	76.20	1.877	47.68	1.263	32.08	56.86	252.93	50.60	8.86
C1460-148-3500-M	1.460	37.08	0.148	3.76	3.500	88.90	2.169	55.09	1.428	36.27	56.86	252.93	42.70	7.47
C1460-148-4000-M	1.460	37.08	0.148	3.76	4.000	101.60	2.462	62.53	1.593	40.46	56.86	252.93	37.00	6.48
C1460-162-1500-M	1.460	37.08	0.162	4.12	1.500	38.10	1.051	26.70	0.857	21.77	72.94	324.45	162.40	28.42
C1460-162-2000-M	1.460	37.08	0.162	4.12	2.000	50.80	1.360	34.54	1.049	26.64	72.94	324.45	114.00	19.95
C1460-162-2500-M	1.460	37.08	0.162	4.12	2.500	63.50	1.669	42.39	1.241	31.52	72.94	324.45	87.80	15.37
C1460-162-3000-M	1.460	37.08	0.162	4.12	3.000	76.20	1.978	50.24	1.433	36.40	72.94	324.45	71.40	12.50
C1460-162-3500-M	1.460	37.08	0.162	4.12	3.500	88.90	2.287	58.09	1.625	41.28	72.94	324.45	60.10	10.52
C1460-162-4000-M	1.460	37.08	0.162	4.12	4.000	101.60	2.596	65.94	1.817	46.15	72.94	324.45	52.00	9.10
C1460-162-4500-M	1.460	37.08	0.162	4.12	4.500	114.30	2.905	73.79	2.009	51.03	72.94	324.45	45.70	8.00
C1460-162-5000-M	1.460	37.08	0.162	4.12	5.000	127.00	3.214	81.64	2.201	55.91	72.94	324.45	40.80	7.14
C1469-125-2500-M	**1.469**	**37.31**	**0.125**	**3.18**	**2.500**	**63.50**	**1.036**	**26.31**	**0.816**	**20.74**	**50.14**	**223.05**	**34.25**	**5.99**
C1469-125-2625-M	**1.469**	**37.31**	**0.125**	**3.18**	**2.625**	**66.68**	**1.080**	**27.42**	**0.847**	**21.52**	**50.14**	**223.05**	**32.45**	**5.68**
C1469-125-2750-M	**1.469**	**37.31**	**0.125**	**3.18**	**2.750**	**69.85**	**1.123**	**28.53**	**0.878**	**22.30**	**50.14**	**223.05**	**30.83**	**5.39**
C1469-125-2875-M	**1.469**	**37.31**	**0.125**	**3.18**	**2.875**	**73.03**	**1.167**	**29.64**	**0.909**	**23.08**	**50.14**	**223.05**	**29.36**	**5.14**
C1469-125-3000-M	**1.469**	**37.31**	**0.125**	**3.18**	**3.000**	**76.20**	**1.211**	**30.75**	**0.940**	**23.86**	**50.14**	**223.05**	**28.02**	**4.90**
C1469-125-3250-M	**1.469**	**37.31**	**0.125**	**3.18**	**3.250**	**82.55**	**1.298**	**32.97**	**1.001**	**25.43**	**50.14**	**223.05**	**25.69**	**4.50**
C1469-125-3500-M	**1.469**	**37.31**	**0.125**	**3.18**	**3.500**	**88.90**	**1.385**	**35.19**	**1.063**	**26.99**	**50.14**	**223.05**	**23.71**	**4.15**
C1469-125-3750-M	**1.469**	**37.31**	**0.125**	**3.18**	**3.750**	**95.25**	**1.473**	**37.40**	**1.124**	**28.56**	**50.14**	**223.05**	**22.02**	**3.85**
C1469-125-4000-M	**1.469**	**37.31**	**0.125**	**3.18**	**4.000**	**101.60**	**1.560**	**39.62**	**1.186**	**30.12**	**50.14**	**223.05**	**20.55**	**3.60**
C1469-125-4250-M	**1.469**	**37.31**	**0.125**	**3.18**	**4.250**	**107.95**	**1.647**	**41.84**	**1.247**	**31.68**	**50.14**	**223.05**	**19.27**	**3.37**
C1469-125-4500-M	**1.469**	**37.31**	**0.125**	**3.18**	**4.500**	**114.30**	**1.735**	**44.06**	**1.309**	**33.25**	**50.14**	**223.05**	**18.13**	**3.17**
C1469-125-4750-M	**1.469**	**37.31**	**0.125**	**3.18**	**4.750**	**120.65**	**1.822**	**46.28**	**1.370**	**34.81**	**50.14**	**223.05**	**17.13**	**3.00**
C1469-125-5000-M	**1.469**	**37.31**	**0.125**	**3.18**	**5.000**	**127.00**	**1.909**	**48.49**	**1.432**	**36.37**	**50.14**	**223.05**	**16.22**	**2.84**
C1469-125-5250-M	**1.469**	**37.31**	**0.125**	**3.18**	**5.250**	**133.35**	**1.997**	**50.71**	**1.494**	**37.94**	**50.14**	**223.05**	**15.41**	**2.70**
C1469-125-5500-M	**1.469**	**37.31**	**0.125**	**3.18**	**5.500**	**139.70**	**2.084**	**52.93**	**1.555**	**39.50**	**50.14**	**223.05**	**14.68**	**2.57**
C1469-125-5750-M	**1.469**	**37.31**	**0.125**	**3.18**	**5.750**	**146.05**	**2.171**	**55.15**	**1.617**	**41.06**	**50.14**	**223.05**	**14.01**	**2.45**
C1469-125-6000-M	**1.469**	**37.31**	**0.125**	**3.18**	**6.000**	**152.40**	**2.259**	**57.37**	**1.678**	**42.63**	**50.14**	**223.05**	**13.40**	**2.35**
C1469-125-6250-M	**1.469**	**37.31**	**0.125**	**3.18**	**6.250**	**158.75**	**2.346**	**59.58**	**1.740**	**44.19**	**50.14**	**223.05**	**12.84**	**2.25**
C1469-125-6500-M	**1.469**	**37.31**	**0.125**	**3.18**	**6.500**	**165.10**	**2.433**	**61.80**	**1.801**	**45.75**	**50.14**	**223.05**	**12.33**	**2.16**
C1469-125-6750-M	**1.469**	**37.31**	**0.125**	**3.18**	**6.750**	**171.45**	**2.521**	**64.02**	**1.863**	**47.32**	**50.14**	**223.05**	**11.86**	**2.07**
C1469-125-7000-M	**1.469**	**37.31**	**0.125**	**3.18**	**7.000**	**177.80**	**2.608**	**66.24**	**1.924**	**48.88**	**50.14**	**223.05**	**11.42**	**2.00**
C1469-125-7500-M	**1.469**	**37.31**	**0.125**	**3.18**	**7.500**	**190.50**	**2.782**	**70.68**	**2.047**	**52.01**	**50.14**	**223.05**	**10.63**	**1.86**

STAINLESS STEEL						
Catalog #	Load Length (L_1)		Load (P) at L_1		Spring Rate (R)	
	in	mm	lb	N	lb/in	N/mm
D23630	0.945	24.00	124.74	554.89	108.29	18.95
D23640	1.311	33.30	124.74	554.89	68.63	12.01
D23650	1.858	47.20	124.74	554.89	44.51	7.79
D23660	2.591	65.80	124.74	554.89	30.23	5.29
D23670	3.685	93.60	124.74	554.89	20.46	3.58
D23830	1.130	28.70	229.65	1021.53	263.77	46.16
D23840	1.583	40.20	229.65	1021.53	168.00	29.40
D23850	2.264	57.50	229.65	1021.53	108.74	19.03
D23860	3.169	80.50	229.65	1021.53	73.71	12.90
D23870	4.528	115.00	229.65	1021.53	49.94	8.74
C1460-112-1500-S	0.864	21.95	21.85	97.19	34.40	6.02
C1460-112-2000-S	1.115	28.32	21.85	97.19	24.66	4.31
C1460-112-2500-S	1.366	34.70	21.85	97.19	19.24	3.37
C1460-112-3000-S	1.617	41.07	21.85	97.19	15.83	2.77
C1460-112-3500-S	1.868	47.45	21.85	97.19	13.41	2.35
C1460-112-4000-S	2.119	53.82	21.85	97.19	11.58	2.03
C1460-125-1500-S	0.913	23.19	29.66	131.95	50.56	8.85
C1460-125-2000-S	1.179	29.95	29.66	131.95	36.15	6.33
C1460-125-2500-S	1.444	36.68	29.66	131.95	28.07	4.91
C1460-125-3000-S	1.709	43.41	29.66	131.95	22.99	4.02
C1460-125-3500-S	1.975	50.17	29.66	131.95	19.41	3.40
C1460-125-4000-S	2.240	56.90	29.66	131.95	16.83	2.94
C1460-135-1500-S	0.951	24.16	36.73	163.37	66.89	11.71
C1460-135-2000-S	1.228	31.19	36.73	163.37	47.56	8.32
C1460-135-2500-S	1.505	38.23	36.73	163.37	36.90	6.46
C1460-135-3000-S	1.782	45.26	36.73	163.37	30.16	5.28
C1460-135-3500-S	2.059	52.30	36.73	163.37	25.49	4.46
C1460-135-4000-S	2.336	59.33	36.73	163.37	22.08	3.86
C1460-148-1500-S	1.000	25.40	47.36	210.69	94.71	16.57
C1460-148-2000-S	1.292	32.82	47.36	210.69	66.89	11.71
C1460-148-2500-S	1.585	40.26	47.36	210.69	51.73	9.05
C1460-148-3000-S	1.877	47.68	47.36	210.69	42.15	7.38
C1460-148-3500-S	2.169	55.09	47.36	210.69	35.57	6.22
C1460-148-4000-S	2.462	62.53	47.36	210.69	30.82	5.39
C1460-162-1500-S	1.051	26.70	60.76	270.27	135.28	23.67
C1460-162-2000-S	1.360	34.54	60.76	270.27	94.96	16.62
C1460-162-2500-S	1.669	42.39	60.76	270.27	73.14	12.80
C1460-162-3000-S	1.978	50.24	60.76	270.27	59.48	10.41
C1460-162-3500-S	2.287	58.09	60.76	270.27	50.06	8.76
C1460-162-4000-S	2.596	65.94	60.76	270.27	43.32	7.58
C1460-162-4500-S	2.905	73.79	60.76	270.27	38.07	6.66
C1460-162-5000-S	3.214	81.64	60.76	270.27	33.99	5.95
C1469-125-2500-S	**1.214**	**30.84**	**38.29**	**170.33**	**29.78**	**5.21**
C1469-125-2625-S	**1.268**	**32.20**	**38.29**	**170.33**	**28.22**	**4.94**
C1469-125-2750-S	**1.321**	**33.56**	**38.29**	**170.33**	**26.81**	**4.69**
C1469-125-2875-S	**1.375**	**34.93**	**38.29**	**170.33**	**25.53**	**4.47**
C1469-125-3000-S	**1.429**	**36.29**	**38.29**	**170.33**	**24.37**	**4.26**
C1469-125-3250-S	**1.536**	**39.01**	**38.29**	**170.33**	**22.34**	**3.91**
C1469-125-3500-S	**1.643**	**41.73**	**38.29**	**170.33**	**20.62**	**3.61**
C1469-125-3750-S	**1.750**	**44.45**	**38.29**	**170.33**	**19.15**	**3.35**
C1469-125-4000-S	**1.857**	**47.17**	**38.29**	**170.33**	**17.87**	**3.13**
C1469-125-4250-S	**1.964**	**49.89**	**38.29**	**170.33**	**16.75**	**2.93**
C1469-125-4500-S	**2.071**	**52.61**	**38.29**	**170.33**	**15.77**	**2.76**
C1469-125-4750-S	**2.179**	**55.34**	**38.29**	**170.33**	**14.89**	**2.61**
C1469-125-5000-S	**2.286**	**58.06**	**38.29**	**170.33**	**14.11**	**2.47**
C1469-125-5250-S	**2.393**	**60.78**	**38.29**	**170.33**	**13.40**	**2.35**
C1469-125-5500-S	**2.500**	**63.50**	**38.29**	**170.33**	**12.76**	**2.23**
C1469-125-5750-S	**2.607**	**66.22**	**38.29**	**170.33**	**12.18**	**2.13**
C1469-125-6000-S	**2.714**	**68.94**	**38.29**	**170.33**	**11.65**	**2.04**
C1469-125-6250-S	**2.821**	**71.66**	**38.29**	**170.33**	**11.17**	**1.95**
C1469-125-6500-S	**2.929**	**74.39**	**38.29**	**170.33**	**10.72**	**1.88**
C1469-125-6750-S	**3.036**	**77.11**	**38.29**	**170.33**	**10.31**	**1.80**
C1469-125-7000-S	**3.143**	**79.83**	**38.29**	**170.33**	**9.93**	**1.74**
C1469-125-7500-S	**3.357**	**85.27**	**38.29**	**170.33**	**9.24**	**1.62**

FOR INFORMATION ON ALTERNATIVE FINISHES, SEE PAGE 311

Part Numbers with an "*" are squared and not ground. **Part Numbers in bold** represent the newly expanded Associated Spring RAYMOND compression spring offering.

MUSIC WIRE															STAINLESS STEEL					
Catalog #	Outside Diameter (OD)		Wire Diameter (d)		Free Length (L) Approx		Load Length (L_1)		Solid Height (Sh) Approx		Load (P) at L_1		Spring Rate (R)		Catalog #	Load Length (L_1)		Load (P) at L_1		Spring Rate (R)	
	in	mm	in	mm	in	mm	in	mm	in	mm	lb	N	lb/in	N/mm		in	mm	lb	N	lb/in	N/mm
C1469-125-8000-M	1.469	37.31	0.125	3.18	8.000	203.20	2.957	75.11	2.171	55.13	50.14	223.05	9.94	1.74	**C1469-125-8000-S**	3.571	90.71	38.29	170.33	8.65	1.51
C1469-125-8500-M	1.469	37.31	0.125	3.18	8.500	215.90	3.132	79.55	2.294	58.26	50.14	223.05	9.34	1.63	**C1469-125-8500-S**	3.786	96.16	38.29	170.33	8.12	1.42
C1469-125-9000-M	1.469	37.31	0.125	3.18	9.000	228.60	3.306	83.98	2.417	61.39	50.14	223.05	8.81	1.54	**C1469-125-9000-S**	4.000	101.60	38.29	170.33	7.66	1.34
C1469-125-9500-M*	1.469	37.31	0.125	3.18	9.500	241.30	3.562	90.49	2.640	67.07	50.14	223.05	8.45	1.48	**C1469-125-9500-S***	4.286	108.86	38.29	170.33	7.34	1.29
C1469-135-2375-M	1.469	37.31	0.135	3.43	2.375	60.33	1.071	27.19	0.882	22.41	62.10	276.26	47.61	8.33	**C1469-135-2375-S**	1.238	31.44	47.07	209.39	41.40	7.24
C1469-135-2500-M	1.469	37.31	0.135	3.43	2.500	63.50	1.118	28.40	0.918	23.31	62.10	276.26	44.94	7.86	**C1469-135-2500-S**	1.295	32.90	47.07	209.39	39.08	6.84
C1469-135-2625-M	1.469	37.31	0.135	3.43	2.625	66.68	1.166	29.61	0.953	24.22	62.10	276.26	42.56	7.45	**C1469-135-2625-S**	1.353	34.36	47.07	209.39	37.00	6.48
C1469-135-2750-M	1.469	37.31	0.135	3.43	2.750	69.85	1.213	30.81	0.989	25.12	62.10	276.26	40.41	7.07	**C1469-135-2750-S**	1.410	35.82	47.07	209.39	35.14	6.15
C1469-135-2875-M	1.469	37.31	0.135	3.43	2.875	73.03	1.261	32.02	1.025	26.02	62.10	276.26	38.47	6.73	**C1469-135-2875-S**	1.468	37.28	47.07	209.39	33.45	5.85
C1469-135-3000-M	1.469	37.31	0.135	3.43	3.000	76.20	1.308	33.23	1.060	26.93	62.10	276.26	36.71	6.42	**C1469-135-3000-S**	1.525	38.74	47.07	209.39	31.92	5.59
C1469-135-3250-M	1.469	37.31	0.135	3.43	3.250	82.55	1.403	35.64	1.131	28.73	62.10	276.26	33.63	5.89	**C1469-135-3250-S**	1.640	41.66	47.07	209.39	29.24	5.12
C1469-135-3500-M	1.469	37.31	0.135	3.43	3.500	88.90	1.498	38.06	1.202	30.54	62.10	276.26	31.03	5.43	**C1469-135-3500-S**	1.755	44.58	47.07	209.39	26.98	4.72
C1469-135-3750-M	1.469	37.31	0.135	3.43	3.750	95.25	1.593	40.47	1.274	32.35	62.10	276.26	28.80	5.04	**C1469-135-3750-S**	1.870	47.50	47.07	209.39	25.04	4.38
C1469-135-4000-M	1.469	37.31	0.135	3.43	4.000	101.60	1.689	42.89	1.345	34.15	62.10	276.26	26.87	4.70	**C1469-135-4000-S**	1.985	50.42	47.07	209.39	23.36	4.09
C1469-135-4250-M	1.469	37.31	0.135	3.43	4.250	107.95	1.784	45.30	1.416	35.96	62.10	276.26	25.18	4.41	**C1469-135-4250-S**	2.100	53.34	47.07	209.39	21.90	3.83
C1469-135-4500-M	1.469	37.31	0.135	3.43	4.500	114.30	1.879	47.72	1.487	37.77	62.10	276.26	23.69	4.15	**C1469-135-4500-S**	2.215	56.26	47.07	209.39	20.60	3.61
C1469-135-4750-M	1.469	37.31	0.135	3.43	4.750	120.65	1.974	50.13	1.558	39.57	62.10	276.26	22.37	3.91	**C1469-135-4750-S**	2.330	59.18	47.07	209.39	19.45	3.40
C1469-135-5000-M	1.469	37.31	0.135	3.43	5.000	127.00	2.069	52.55	1.629	41.38	62.10	276.26	21.19	3.71	**C1469-135-5000-S**	2.445	62.10	47.07	209.39	18.42	3.22
C1469-135-5250-M	1.469	37.31	0.135	3.43	5.250	133.35	2.164	54.96	1.700	43.19	62.10	276.26	20.12	3.52	**C1469-135-5250-S**	2.560	65.02	47.07	209.39	17.50	3.06
C1469-135-5500-M	1.469	37.31	0.135	3.43	5.500	139.70	2.259	57.38	1.771	44.99	62.10	276.26	19.16	3.35	**C1469-135-5500-S**	2.675	67.94	47.07	209.39	16.66	2.92
C1469-135-5750-M	1.469	37.31	0.135	3.43	5.750	146.05	2.354	59.79	1.842	46.80	62.10	276.26	18.29	3.20	**C1469-135-5750-S**	2.790	70.86	47.07	209.39	15.90	2.78
C1469-135-6000-M	1.469	37.31	0.135	3.43	6.000	152.40	2.449	62.21	1.914	48.61	62.10	276.26	17.49	3.06	**C1469-135-6000-S**	2.905	73.78	47.07	209.39	15.21	2.66
C1469-135-6250-M	1.469	37.31	0.135	3.43	6.250	158.75	2.544	64.62	1.985	50.41	62.10	276.26	16.76	2.93	**C1469-135-6250-S**	3.020	76.70	47.07	209.39	14.57	2.55
C1469-135-6500-M	1.469	37.31	0.135	3.43	6.500	165.10	2.639	67.04	2.056	52.22	62.10	276.26	16.09	2.82	**C1469-135-6500-S**	3.135	79.62	47.07	209.39	13.99	2.45
C1469-135-6750-M	1.469	37.31	0.135	3.43	6.750	171.45	2.734	69.45	2.127	54.02	62.10	276.26	15.47	2.71	**C1469-135-6750-S**	3.250	82.54	47.07	209.39	13.45	2.35
C1469-135-7000-M	1.469	37.31	0.135	3.43	7.000	177.80	2.829	71.87	2.198	55.83	62.10	276.26	14.89	2.61	**C1469-135-7000-S**	3.365	85.46	47.07	209.39	12.95	2.27
C1469-135-7500-M*	1.469	37.31	0.135	3.43	7.500	190.50	3.103	78.82	2.444	62.07	62.10	276.26	14.13	2.47	**C1469-135-7500-S***	3.668	93.16	47.07	209.39	12.28	2.15
C1469-135-8000-M*	1.469	37.31	0.135	3.43	8.000	203.20	3.293	83.65	2.586	65.68	62.10	276.26	13.20	2.31	**C1469-135-8000-S***	3.898	99.00	47.07	209.39	11.47	2.01
C1469-135-8500-M*	1.469	37.31	0.135	3.43	8.500	215.90	3.484	88.48	2.728	69.29	62.10	276.26	12.38	2.17	**C1469-135-8500-S***	4.127	104.84	47.07	209.39	10.77	1.88
C1469-135-9000-M*	1.469	37.31	0.135	3.43	9.000	228.60	3.674	93.31	2.870	72.91	62.10	276.26	11.66	2.04	**C1469-135-9000-S***	4.357	110.68	47.07	209.39	10.14	1.77
C1469-135-9500-M*	1.469	37.31	0.135	3.43	9.500	241.30	3.864	98.14	3.013	76.52	62.10	276.26	11.02	1.93	**C1469-135-9500-S***	4.587	116.52	47.07	209.39	9.58	1.68
C1469-148-2250-M	1.469	37.31	0.148	3.76	2.250	57.15	1.120	28.44	0.966	24.55	80.15	356.50	70.92	12.41	**C1469-148-2250-S**	1.275	32.38	60.15	267.55	61.67	10.79
C1469-148-2375-M	1.469	37.31	0.148	3.76	2.375	60.33	1.173	29.78	1.008	25.61	80.15	356.50	66.65	11.66	**C1469-148-2375-S**	1.337	33.97	60.15	267.55	57.96	10.14
C1469-148-2500-M	1.469	37.31	0.148	3.76	2.500	63.50	1.225	31.12	1.050	26.68	80.15	356.50	62.87	11.00	**C1469-148-2500-S**	1.400	35.56	60.15	267.55	54.67	9.57
C1469-148-2625-M	1.469	37.31	0.148	3.76	2.625	66.68	1.278	32.46	1.092	27.74	80.15	356.50	59.50	10.41	**C1469-148-2625-S**	1.462	37.15	60.15	267.55	51.74	9.05
C1469-148-2750-M	1.469	37.31	0.148	3.76	2.750	69.85	1.331	33.80	1.134	28.81	80.15	356.50	56.47	9.88	**C1469-148-2750-S**	1.525	38.74	60.15	267.55	49.10	8.59
C1469-148-2875-M	1.469	37.31	0.148	3.76	2.875	73.03	1.383	35.14	1.176	29.87	80.15	356.50	53.73	9.40	**C1469-148-2875-S**	1.588	40.33	60.15	267.55	46.72	8.18
C1469-148-3000-M	1.469	37.31	0.148	3.76	3.000	76.20	1.436	36.48	1.218	30.94	80.15	356.50	51.25	8.97	**C1469-148-3000-S**	1.650	41.92	60.15	267.55	44.56	7.80
C1469-148-3250-M	1.469	37.31	0.148	3.76	3.250	82.55	1.541	39.15	1.302	33.07	80.15	356.50	46.91	8.21	**C1469-148-3250-S**	1.775	45.10	60.15	267.55	40.79	7.14
C1469-148-3500-M	1.469	37.31	0.148	3.76	3.500	88.90	1.647	41.83	1.386	35.20	80.15	356.50	43.25	7.57	**C1469-148-3500-S**	1.901	48.28	60.15	267.55	37.61	6.58
C1469-148-3750-M	1.469	37.31	0.148	3.76	3.750	95.25	1.752	44.51	1.470	37.33	80.15	356.50	40.12	7.02	**C1469-148-3750-S**	2.026	51.46	60.15	267.55	34.89	6.10
C1469-148-4000-M	1.469	37.31	0.148	3.76	4.000	101.60	1.858	47.19	1.554	39.46	80.15	356.50	37.41	6.55	**C1469-148-4000-S**	2.151	54.64	60.15	267.55	32.53	5.69
C1469-148-4250-M	1.469	37.31	0.148	3.76	4.250	107.95	1.963	49.86	1.637	41.59	80.15	356.50	35.05	6.13	**C1469-148-4250-S**	2.276	57.82	60.15	267.55	30.47	5.33
C1469-148-4500-M	1.469	37.31	0.148	3.76	4.500	114.30	2.068	52.54	1.721	43.72	80.15	356.50	32.96	5.77	**C1469-148-4500-S**	2.401	61.00	60.15	267.55	28.66	5.02
C1469-148-4750-M	1.469	37.31	0.148	3.76	4.750	120.65	2.174	55.22	1.805	45.85	80.15	356.50	31.11	5.44	**C1469-148-4750-S**	2.527	64.18	60.15	267.55	27.05	4.73
C1469-148-5000-M	1.469	37.31	0.148	3.76	5.000	127.00	2.279	57.89	1.889	47.98	80.15	356.50	29.46	5.16	**C1469-148-5000-S**	2.652	67.36	60.15	267.55	25.62	4.48
C1469-148-5250-M	1.469	37.31	0.148	3.76	5.250	133.35	2.385	60.57	1.973	50.11	80.15	356.50	27.97	4.89	**C1469-148-5250-S**	2.777	70.54	60.15	267.55	24.32	4.26
C1469-148-5500-M	1.469	37.31	0.148	3.76	5.500	139.70	2.490	63.25	2.057	52.25	80.15	356.50	26.63	4.66	**C1469-148-5500-S**	2.902	73.72	60.15	267.55	23.15	4.05
C1469-148-5750-M	1.469	37.31	0.148	3.76	5.750	146.05	2.596	65.93	2.141	54.38	80.15	356.50	25.41	4.45	**C1469-148-5750-S**	3.027	76.90	60.15	267.55	22.09	3.87
C1469-148-6000-M	1.469	37.31	0.148	3.76	6.000	152.40	2.701	68.60	2.225	56.51	80.15	356.50	24.29	4.25	**C1469-148-6000-S**	3.153	80.08	60.15	267.55	21.13	3.70
C1469-148-6250-M	1.469	37.31	0.148	3.76	6.250	158.75	2.806	71.28	2.309	58.64	80.15	356.50	23.27	4.07	**C1469-148-6250-S**	3.278	83.26	60.15	267.55	20.24	3.54
C1469-148-6500-M	1.469	37.31	0.148	3.76	6.500	165.10	2.912	73.96	2.392	60.77	80.15	356.50	22.34	3.91	**C1469-148-6500-S**	3.403	86.44	60.15	267.55	19.42	3.40
C1469-148-6750-M*	1.469	37.31	0.148	3.76	6.750	171.45	3.103	78.81	2.582	65.58	80.15	356.50	21.97	3.85	**C1469-148-6750-S***	3.602	91.50	60.15	267.55	19.11	3.34
C1469-148-7000-M*	1.469	37.31	0.148	3.76	7.000	177.80	3.208	81.49	2.666	67.71	80.15	356.50	21.14	3.70	**C1469-148-7000-S***	3.727	94.68	60.15	267.55	18.38	3.22
C1469-148-7500-M*	1.469	37.31	0.148	3.76	7.500	190.50	3.419	86.84	2.834	71.98	80.15	356.50	19.64	3.44	**C1469-148-7500-S***	3.978	101.04	60.15	267.55	17.08	2.99
C1469-148-8000-M*	1.469	37.31	0.148	3.76	8.000	203.20	3.630	92.20	3.001	76.24	80.15	356.50	18.34	3.21	**C1469-148-8000-S***	4.228	107.40	60.15	267.55	15.95	2.79
C1469-148-8500-M*	1.469	37.31	0.148	3.76	8.500	215.90	3.841	97.55	3.169	80.50	80.15	356.50	17.20	3.01	**C1469-148-8500-S***	4.479	113.76	60.15	267.55	14.96	2.62
C1469-148-9000-M*	1.469	37.31	0.148	3.76	9.000	228.60	4.051	102.91	3.337	84.76	80.15	356.50	16.20	2.83	**C1469-148-9000-S***	4.729	120.12	60.15	267.55	14.08	2.46
C1469-148-9500-M*	1.469	37.31	0.148	3.76	9.500	241.30	4.262	108.26	3.505	89.02	80.15	356.50	15.30	2.68	**C1469-148-9500-S***	4.979	126.48	60.15	267.55	13.31	2.33
C1469-162-2125-M	1.469	37.31	0.162	4.12	2.125	53.98	1.164	29.57	1.044	26.53	102.92	457.79	107.12	18.75	**C1469-162-2125-S**	1.305	33.14	76.41	339.90	93.15	16.30
C1469-162-2250-M	1.469	37.31	0.162	4.12	2.250	57.15	1.223	31.05	1.093	27.77	102.92	457.79	100.16	17.53	**C1469-162-2250-S**	1.373	34.87	76.41	339.90	87.10	15.24
C1469-162-2375-M	1.469	37.31	0.162	4.12	2.375	60.33	1.281	32.53	1.142	29.01	102.92	457.79	94.06	16.46	**C1469-162-2375-S**	1.441	36.60	76.41	339.90	81.79	14.31
C1469-162-2500-M	1.469	37.31	0.162	4.12	2.500	63.50	1.339	34.01	1.191	30.25	102.92	457.79	88.66	15.51	**C1469-162-2500-S**	1.509	38.32	76.41	339.90	77.09	13.49
C1469-162-2625-M	1.469	37.31	0.162	4.12	2.625	66.68	1.397	35.50	1.240	31.49	102.92	457.79	83.84	14.67	**C1469-162-2625-S**	1.577	40.05	76.41	339.90	72.91	12.76

Part Numbers with an "*" are squared and not ground. **Part Numbers in bold** represent the newly expanded Associated Spring RAYMOND compression spring offering.

MUSIC WIRE															STAINLESS STEEL					
Catalog #	Outside Diameter (OD)		Wire Diameter (d)		Free Length (L) Approx		Load Length (L_1)		Solid Height (Sh) Approx		Load (P) at L_1		Spring Rate (R)		Catalog #	Load Length (L_1)		Load (P) at L_1		Spring Rate (R)	
	in	mm	in	mm	in	mm	in	mm	in	mm	lb	N	lb/in	N/mm		in	mm	lb	N	lb/in	N/mm
C1469-162-2750-M	1.469	37.31	0.162	4.12	2.750	69.85	1.456	36.98	1.289	32.73	102.92	457.79	79.52	13.92	**C1469-162-2750-S**	1.645	41.78	76.41	339.90	69.15	12.10
C1469-162-2875-M	1.469	37.31	0.162	4.12	2.875	73.03	1.514	38.46	1.338	33.98	102.92	457.79	75.62	13.23	**C1469-162-2875-S**	1.713	43.51	76.41	339.90	65.76	11.51
C1469-162-3000-M	1.469	37.31	0.162	4.12	3.000	76.20	1.572	39.94	1.387	35.22	102.92	457.79	72.09	12.62	**C1469-162-3000-S**	1.781	45.24	76.41	339.90	62.69	10.97
C1469-162-3250-M	1.469	37.31	0.162	4.12	3.250	82.55	1.689	42.90	1.484	37.70	102.92	457.79	65.93	11.54	**C1469-162-3250-S**	1.917	48.70	76.41	339.90	57.33	10.03
C1469-162-3500-M	1.469	37.31	0.162	4.12	3.500	88.90	1.806	45.86	1.582	40.18	102.92	457.79	60.74	10.63	**C1469-162-3500-S**	2.053	52.15	76.41	339.90	52.82	9.24
C1469-162-3750-M	1.469	37.31	0.162	4.12	3.750	95.25	1.922	48.83	1.680	42.67	102.92	457.79	56.31	9.85	**C1469-162-3750-S**	2.189	55.61	76.41	339.90	48.97	8.57
C1469-162-4000-M	1.469	37.31	0.162	4.12	4.000	101.60	2.039	51.79	1.778	45.15	102.92	457.79	52.48	9.18	**C1469-162-4000-S**	2.326	59.07	76.41	339.90	45.64	7.99
C1469-162-4250-M	1.469	37.31	0.162	4.12	4.250	107.95	2.156	54.75	1.875	47.63	102.92	457.79	49.14	8.60	**C1469-162-4250-S**	2.462	62.53	76.41	339.90	42.73	7.48
C1469-162-4500-M	1.469	37.31	0.162	4.12	4.500	114.30	2.272	57.71	1.973	50.11	102.92	457.79	46.20	8.08	**C1469-162-4500-S**	2.598	65.98	76.41	339.90	40.17	7.03
C1469-162-4750-M	1.469	37.31	0.162	4.12	4.750	120.65	2.389	60.68	2.071	52.60	102.92	457.79	43.59	7.63	**C1469-162-4750-S**	2.734	69.44	76.41	339.90	37.90	6.63
C1469-162-5000-M	1.469	37.31	0.162	4.12	5.000	127.00	2.505	63.64	2.169	55.08	102.92	457.79	41.26	7.22	**C1469-162-5000-S**	2.870	72.90	76.41	339.90	35.88	6.28
C1469-162-5250-M	1.469	37.31	0.162	4.12	5.250	133.35	2.622	66.60	2.266	57.56	102.92	457.79	39.16	6.85	**C1469-162-5250-S**	3.006	76.36	76.41	339.90	34.06	5.96
C1469-162-5500-M	1.469	37.31	0.162	4.12	5.500	139.70	2.739	69.56	2.364	60.05	102.92	457.79	37.27	6.52	**C1469-162-5500-S**	3.142	79.81	76.41	339.90	32.41	5.67
C1469-162-5750-M	1.469	37.31	0.162	4.12	5.750	146.05	2.855	72.53	2.462	62.53	102.92	457.79	35.55	6.22	**C1469-162-5750-S**	3.278	83.27	76.41	339.90	30.92	5.41
C1469-162-6000-M	1.469	37.31	0.162	4.12	6.000	152.40	2.972	75.49	2.560	65.01	102.92	457.79	33.99	5.95	**C1469-162-6000-S**	3.415	86.73	76.41	339.90	29.56	5.17
C1469-162-6250-M	1.469	37.31	0.162	4.12	6.250	158.75	3.089	78.45	2.657	67.49	102.92	457.79	32.55	5.70	**C1469-162-6250-S**	3.551	90.19	76.41	339.90	28.31	4.95
C1469-162-6500-M	1.469	37.31	0.162	4.12	6.500	165.10	3.205	81.41	2.755	69.98	102.92	457.79	31.24	5.47	**C1469-162-6500-S**	3.687	93.65	76.41	339.90	27.16	4.75
C1469-162-6750-M	1.469	37.31	0.162	4.12	6.750	171.45	3.322	84.38	2.853	72.46	102.92	457.79	30.02	5.25	**C1469-162-6750-S**	3.823	97.10	76.41	339.90	26.11	4.57
C1469-162-7000-M	1.469	37.31	0.162	4.12	7.000	177.80	3.439	87.34	2.951	74.94	102.92	457.79	28.90	5.06	**C1469-162-7000-S**	3.959	100.56	76.41	339.90	25.13	4.40
C1469-162-7500-M	1.469	37.31	0.162	4.12	7.500	190.50	3.672	93.26	3.146	79.91	102.92	457.79	26.88	4.70	**C1469-162-7500-S**	4.231	107.48	76.41	339.90	23.38	4.09
C1469-162-8000-M	1.469	37.31	0.162	4.12	8.000	203.20	3.905	99.19	3.342	84.87	102.92	457.79	25.13	4.40	**C1469-162-8000-S**	4.504	114.39	76.41	339.90	21.85	3.82
C1469-162-8500-M*	1.469	37.31	0.162	4.12	8.500	215.90	4.225	107.31	3.644	92.55	102.92	457.79	24.07	4.21	**C1469-162-8500-S***	4.850	123.18	76.41	339.90	20.93	3.66
C1469-162-9000-M*	1.469	37.31	0.162	4.12	9.000	228.60	4.458	113.23	3.839	97.52	102.92	457.79	22.66	3.97	**C1469-162-9000-S***	5.122	130.10	76.41	339.90	19.70	3.45
C1469-162-9500-M*	1.469	37.31	0.162	4.12	9.500	241.30	4.691	119.16	4.035	102.48	102.92	457.79	21.40	3.75	**C1469-162-9500-S***	5.394	137.01	76.41	339.90	18.61	3.26
C1469-177-2125-M	1.469	37.31	0.177	4.50	2.125	53.98	1.264	32.11	1.168	29.67	131.40	584.48	152.67	26.72	**C1469-177-2125-S**	1.399	35.52	96.44	428.98	132.76	23.23
C1469-177-2250-M	1.469	37.31	0.177	4.50	2.250	57.15	1.329	33.75	1.224	31.10	131.40	584.48	142.61	24.96	**C1469-177-2250-S**	1.472	37.40	96.44	428.98	124.00	21.70
C1469-177-2375-M	1.469	37.31	0.177	4.50	2.375	60.33	1.393	35.38	1.281	32.52	131.40	584.48	133.78	23.41	**C1469-177-2375-S**	1.546	39.27	96.44	428.98	116.33	20.36
C1469-177-2500-M	1.469	37.31	0.177	4.50	2.500	63.50	1.457	37.01	1.337	33.95	131.40	584.48	125.99	22.05	**C1469-177-2500-S**	1.620	41.14	96.44	428.98	109.56	19.17
C1469-177-2625-M	1.469	37.31	0.177	4.50	2.625	66.68	1.521	38.64	1.393	35.38	131.40	584.48	119.06	20.83	**C1469-177-2625-S**	1.693	43.01	96.44	428.98	103.53	18.12
C1469-177-2750-M	1.469	37.31	0.177	4.50	2.750	69.85	1.586	40.27	1.449	36.81	131.40	584.48	112.85	19.75	**C1469-177-2750-S**	1.767	44.89	96.44	428.98	98.13	17.17
C1469-177-2875-M	1.469	37.31	0.177	4.50	2.875	73.03	1.650	41.91	1.505	38.24	131.40	584.48	107.25	18.77	**C1469-177-2875-S**	1.841	46.76	96.44	428.98	93.26	16.32
C1469-177-3000-M	1.469	37.31	0.177	4.50	3.000	76.20	1.714	43.54	1.562	39.66	131.40	584.48	102.18	17.88	**C1469-177-3000-S**	1.915	48.63	96.44	428.98	88.86	15.55
C1469-177-3250-M	1.469	37.31	0.177	4.50	3.250	82.55	1.843	46.80	1.674	42.52	131.40	584.48	93.36	16.34	**C1469-177-3250-S**	2.062	52.38	96.44	428.98	81.19	14.21
C1469-177-3500-M	1.469	37.31	0.177	4.50	3.500	88.90	1.971	50.07	1.786	45.37	131.40	584.48	85.94	15.04	**C1469-177-3500-S**	2.210	56.12	96.44	428.98	74.73	13.08
C1469-177-3750-M	1.469	37.31	0.177	4.50	3.750	95.25	2.100	53.33	1.899	48.23	131.40	584.48	79.62	13.93	**C1469-177-3750-S**	2.357	59.87	96.44	428.98	69.23	12.12
C1469-177-4000-M	1.469	37.31	0.177	4.50	4.000	101.60	2.228	56.59	2.011	51.09	131.40	584.48	74.16	12.98	**C1469-177-4000-S**	2.504	63.61	96.44	428.98	64.49	11.28
C1469-177-4250-M	1.469	37.31	0.177	4.50	4.250	107.95	2.357	59.86	2.124	53.94	131.40	584.48	69.40	12.14	**C1469-177-4250-S**	2.652	67.36	96.44	428.98	60.35	10.56
C1469-177-4500-M	1.469	37.31	0.177	4.50	4.500	114.30	2.485	63.12	2.236	56.80	131.40	584.48	65.21	11.41	**C1469-177-4500-S**	2.799	71.10	96.44	428.98	56.71	9.92
C1469-177-4750-M	1.469	37.31	0.177	4.50	4.750	120.65	2.614	66.39	2.348	59.65	131.40	584.48	61.51	10.76	**C1469-177-4750-S**	2.947	74.85	96.44	428.98	53.48	9.36
C1469-177-5000-M	1.469	37.31	0.177	4.50	5.000	127.00	2.742	69.65	2.461	62.51	131.40	584.48	58.20	10.18	**C1469-177-5000-S**	3.094	78.60	96.44	428.98	50.61	8.86
C1469-177-5250-M	1.469	37.31	0.177	4.50	5.250	133.35	2.871	72.92	2.573	65.36	131.40	584.48	55.22	9.66	**C1469-177-5250-S**	3.242	82.34	96.44	428.98	48.02	8.40
C1469-177-5500-M	1.469	37.31	0.177	4.50	5.500	139.70	2.999	76.18	2.686	68.22	131.40	584.48	52.54	9.19	**C1469-177-5500-S**	3.389	86.09	96.44	428.98	45.69	8.00
C1469-177-5750-M	1.469	37.31	0.177	4.50	5.750	146.05	3.128	79.44	2.798	71.07	131.40	584.48	50.11	8.77	**C1469-177-5750-S**	3.537	89.83	96.44	428.98	43.57	7.62
C1469-177-6000-M	1.469	37.31	0.177	4.50	6.000	152.40	3.256	82.71	2.911	73.93	131.40	584.48	47.89	8.38	**C1469-177-6000-S**	3.684	93.58	96.44	428.98	41.64	7.29
C1469-177-6250-M	1.469	37.31	0.177	4.50	6.250	158.75	3.385	85.97	3.023	76.78	131.40	584.48	45.86	8.03	**C1469-177-6250-S**	3.832	97.32	96.44	428.98	39.88	6.98
C1469-177-6500-M	1.469	37.31	0.177	4.50	6.500	165.10	3.513	89.24	3.135	79.64	131.40	584.48	43.99	7.70	**C1469-177-6500-S**	3.979	101.07	96.44	428.98	38.25	6.69
C1469-177-6750-M	1.469	37.31	0.177	4.50	6.750	171.45	3.642	92.50	3.248	82.50	131.40	584.48	42.27	7.40	**C1469-177-6750-S**	4.126	104.81	96.44	428.98	36.76	6.43
C1469-177-7000-M	1.469	37.31	0.177	4.50	7.000	177.80	3.770	95.76	3.360	85.35	131.40	584.48	40.68	7.12	**C1469-177-7000-S**	4.274	108.56	96.44	428.98	35.38	6.19
C1469-177-7500-M	1.469	37.31	0.177	4.50	7.500	190.50	4.027	102.29	3.585	91.06	131.40	584.48	37.84	6.62	**C1469-177-7500-S**	4.569	116.05	96.44	428.98	32.90	5.76
C1469-177-8000-M	1.469	37.31	0.177	4.50	8.000	203.20	4.284	108.82	3.810	96.77	131.40	584.48	35.36	6.19	**C1469-177-8000-S**	4.864	123.54	96.44	428.98	30.75	5.38
C1469-177-8500-M	1.469	37.31	0.177	4.50	8.500	215.90	4.541	115.35	4.035	102.48	131.40	584.48	33.19	5.81	**C1469-177-8500-S**	5.159	131.03	96.44	428.98	28.86	5.05
C1469-177-9000-M	1.469	37.31	0.177	4.50	9.000	228.60	4.798	121.88	4.260	108.19	131.40	584.48	31.27	5.47	**C1469-177-9000-S**	5.454	138.52	96.44	428.98	27.19	4.76
C1469-177-9500-M	1.469	37.31	0.177	4.50	9.500	241.30	5.055	128.40	4.484	113.91	131.40	584.48	29.56	5.17	**C1469-177-9500-S**	5.748	146.01	96.44	428.98	25.71	4.50
C1469-192-2000-M	1.469	37.31	0.192	4.88	2.000	50.80	1.289	32.74	1.222	31.03	164.33	731.00	231.09	40.44	**C1469-192-2000-S**	1.407	35.73	119.23	530.38	200.95	35.17
C1469-192-2125-M	1.469	37.31	0.192	4.88	2.125	53.98	1.359	34.52	1.285	32.64	164.33	731.00	214.50	37.54	**C1469-192-2125-S**	1.486	37.74	119.23	530.38	186.52	32.64
C1469-192-2250-M	1.469	37.31	0.192	4.88	2.250	57.15	1.429	36.29	1.348	34.24	164.33	731.00	200.13	35.02	**C1469-192-2250-S**	1.565	39.75	119.23	530.38	174.03	30.45
C1469-192-2375-M	1.469	37.31	0.192	4.88	2.375	60.33	1.499	38.07	1.411	35.85	164.33	731.00	187.57	32.82	**C1469-192-2375-S**	1.644	41.76	119.23	530.38	163.10	28.54
C1469-192-2500-M	1.469	37.31	0.192	4.88	2.500	63.50	1.569	39.85	1.475	37.46	164.33	731.00	176.49	30.89	**C1469-192-2500-S**	1.723	43.77	119.23	530.38	153.47	26.86
C1469-192-2625-M	1.469	37.31	0.192	4.88	2.625	66.68	1.639	41.63	1.538	39.07	164.33	731.00	166.64	29.16	**C1469-192-2625-S**	1.802	45.78	119.23	530.38	144.91	25.36
C1469-192-2750-M	1.469	37.31	0.192	4.88	2.750	69.85	1.709	43.40	1.601	40.67	164.33	731.00	157.84	27.62	**C1469-192-2750-S**	1.881	47.78	119.23	530.38	137.25	24.02
C1469-192-2875-M	1.469	37.31	0.192	4.88	2.875	73.03	1.779	45.18	1.665	42.28	164.33	731.00	149.92	26.24	**C1469-192-2875-S**	1.960	49.79	119.23	530.38	130.36	22.81
C1469-192-3000-M	1.469	37.31	0.192	4.88	3.000	76.20	1.849	46.96	1.728	43.89	164.33	731.00	142.76	24.98	**C1469-192-3000-S**	2.039	51.80	119.23	530.38	124.14	21.72
C1469-192-3250-M	1.469	37.31	0.192	4.88	3.250	82.55	1.989	50.52	1.855	47.11	164.33	731.00	130.30	22.80	**C1469-192-3250-S**	2.198	55.82	119.23	530.38	113.31	19.83
C1469-192-3500-M	1.469	37.31	0.192	4.88	3.500	88.90	2.129	54.07	1.981	50.32	164.33	731.00	119.85	20.97	**C1469-192-3500-S**	2.356	59.84	119.23	530.38	104.22	18.24

FOR INFORMATION ON ALTERNATIVE FINISHES, SEE PAGE 311

Part Numbers with an "*" are squared and not ground. **Part Numbers in bold** represent the newly expanded Associated Spring RAYMOND compression spring offering.

MUSIC WIRE																STAINLESS STEEL						
Catalog #	Outside Diameter (OD)		Wire Diameter (d)		Free Length (L) Approx		Load Length (L_1)		Solid Height (Sh) Approx		Load (P) at L_1		Spring Rate (R)		Catalog #	Load Length (L_1)		Load (P) at L_1		Spring Rate (R)	
	in	mm	in	mm	in	mm	in	mm	in	mm	lb	N	lb/in	N/mm		in	mm	lb	N	lb/in	N/mm
C1469-192-3750-M	1.469	37.31	0.192	4.88	3.750	95.25	2.269	57.63	2.108	53.54	164.33	731.00	110.95	19.42	**C1469-192-3750-S**	2.514	63.86	119.23	530.38	96.48	16.88
C1469-192-4000-M	1.469	37.31	0.192	4.88	4.000	101.60	2.409	61.18	2.234	56.75	164.33	731.00	103.28	18.07	**C1469-192-4000-S**	2.672	67.88	119.23	530.38	89.81	15.72
C1469-192-4250-M	1.469	37.31	0.192	4.88	4.250	107.95	2.549	64.74	2.361	59.97	164.33	731.00	96.60	16.90	**C1469-192-4250-S**	2.831	71.90	119.23	530.38	84.00	14.70
C1469-192-4500-M	1.469	37.31	0.192	4.88	4.500	114.30	2.689	68.29	2.488	63.18	164.33	731.00	90.73	15.88	**C1469-192-4500-S**	2.989	75.91	119.23	530.38	78.90	13.81
C1469-192-4750-M	1.469	37.31	0.192	4.88	4.750	120.65	2.829	71.85	2.614	66.40	164.33	731.00	85.54	14.97	**C1469-192-4750-S**	3.147	79.93	119.23	530.38	74.38	13.02
C1469-192-5000-M	1.469	37.31	0.192	4.88	5.000	127.00	2.969	75.41	2.741	69.62	164.33	731.00	80.90	14.16	**C1469-192-5000-S**	3.305	83.95	119.23	530.38	70.35	12.31
C1469-192-5250-M	1.469	37.31	0.192	4.88	5.250	133.35	3.109	78.96	2.867	72.83	164.33	731.00	76.75	13.43	**C1469-192-5250-S**	3.463	87.97	119.23	530.38	66.74	11.68
C1469-192-5500-M	1.469	37.31	0.192	4.88	5.500	139.70	3.249	82.52	2.994	76.05	164.33	731.00	73.00	12.77	**C1469-192-5500-S**	3.622	91.99	119.23	530.38	63.48	11.11
C1469-192-5750-M	1.469	37.31	0.192	4.88	5.750	146.05	3.389	86.07	3.121	79.26	164.33	731.00	69.60	12.18	**C1469-192-5750-S**	3.780	96.01	119.23	530.38	60.52	10.59
C1469-192-6000-M	1.469	37.31	0.192	4.88	6.000	152.40	3.529	89.63	3.247	82.48	164.33	731.00	66.50	11.64	**C1469-192-6000-S**	3.938	100.02	119.23	530.38	57.82	10.12
C1469-192-6250-M	1.469	37.31	0.192	4.88	6.250	158.75	3.669	93.18	3.374	85.69	164.33	731.00	63.66	11.14	**C1469-192-6250-S**	4.096	104.04	119.23	530.38	55.36	9.69
C1469-192-6500-M	1.469	37.31	0.192	4.88	6.500	165.10	3.809	96.74	3.500	88.91	164.33	731.00	61.06	10.69	**C1469-192-6500-S**	4.254	108.06	119.23	530.38	53.10	9.29
C1469-192-6750-M	1.469	37.31	0.192	4.88	6.750	171.45	3.949	100.30	3.627	92.13	164.33	731.00	58.66	10.27	**C1469-192-6750-S**	4.413	112.08	119.23	530.38	51.01	8.93
C1469-192-7000-M	1.469	37.31	0.192	4.88	7.000	177.80	4.089	103.85	3.754	95.34	164.33	731.00	56.45	9.88	**C1469-192-7000-S**	4.571	116.10	119.23	530.38	49.08	8.59
C1469-192-7500-M	1.469	37.31	0.192	4.88	7.500	190.50	4.369	110.96	4.007	101.77	164.33	731.00	52.48	9.18	**C1469-192-7500-S**	4.887	124.14	119.23	530.38	45.64	7.99
C1469-192-8000-M	1.469	37.31	0.192	4.88	8.000	203.20	4.649	118.07	4.260	108.20	164.33	731.00	49.03	8.58	**C1469-192-8000-S**	5.204	132.17	119.23	530.38	42.64	7.46
C1469-192-8500-M	1.469	37.31	0.192	4.88	8.500	215.90	4.929	125.19	4.513	114.64	164.33	731.00	46.01	8.05	**C1469-192-8500-S**	5.520	140.21	119.23	530.38	40.01	7.00
C1469-192-9000-M	1.469	37.31	0.192	4.88	9.000	228.60	5.209	132.30	4.766	121.07	164.33	731.00	43.34	7.59	**C1469-192-9000-S**	5.836	148.25	119.23	530.38	37.69	6.60
C1469-192-9500-M	1.469	37.31	0.192	4.88	9.500	241.30	5.489	139.41	5.020	127.50	164.33	731.00	40.97	7.17	**C1469-192-9500-S**	6.153	156.28	119.23	530.38	35.62	6.23
C1469-207-2000-M	1.469	37.31	0.207	5.26	2.000	50.80	1.371	34.83	1.323	33.61	201.95	898.32	321.19	56.21	**C1469-207-2000-S**	1.481	37.63	144.86	644.38	279.30	48.88
C1469-207-2125-M	1.469	37.31	0.207	5.26	2.125	53.98	1.447	36.75	1.393	35.39	201.95	898.32	297.73	52.10	**C1469-207-2125-S**	1.565	39.76	144.86	644.38	258.89	45.31
C1469-207-2250-M	1.469	37.31	0.207	5.26	2.250	57.15	1.522	38.66	1.463	37.17	201.95	898.32	277.46	48.55	**C1469-207-2250-S**	1.650	41.90	144.86	644.38	241.27	42.22
C1469-207-2375-M	1.469	37.31	0.207	5.26	2.375	60.33	1.598	40.58	1.533	38.95	201.95	898.32	259.77	45.46	**C1469-207-2375-S**	1.734	44.04	144.86	644.38	225.89	39.53
C1469-207-2500-M	1.469	37.31	0.207	5.26	2.500	63.50	1.673	42.49	1.603	40.73	201.95	898.32	244.20	42.74	**C1469-207-2500-S**	1.818	46.17	144.86	644.38	212.35	37.16
C1469-207-2625-M	1.469	37.31	0.207	5.26	2.625	66.68	1.748	44.41	1.673	42.51	201.95	898.32	230.40	40.32	**C1469-207-2625-S**	1.902	48.31	144.86	644.38	200.35	35.06
C1469-207-2750-M	1.469	37.31	0.207	5.26	2.750	69.85	1.824	46.33	1.744	44.29	201.95	898.32	218.07	38.16	**C1469-207-2750-S**	1.986	50.45	144.86	644.38	189.63	33.18
C1469-207-2875-M	1.469	37.31	0.207	5.26	2.875	73.03	1.899	48.24	1.814	46.06	201.95	898.32	206.99	36.22	**C1469-207-2875-S**	2.070	52.58	144.86	644.38	179.99	31.50
C1469-207-3000-M	1.469	37.31	0.207	5.26	3.000	76.20	1.975	50.16	1.884	47.84	201.95	898.32	196.99	34.47	**C1469-207-3000-S**	2.154	54.72	144.86	644.38	171.29	29.98
C1469-207-3250-M	1.469	37.31	0.207	5.26	3.250	82.55	2.126	53.99	2.024	51.40	201.95	898.32	179.62	31.43	**C1469-207-3250-S**	2.323	58.99	144.86	644.38	156.19	27.33
C1469-207-3500-M	1.469	37.31	0.207	5.26	3.500	88.90	2.277	57.83	2.164	54.96	201.95	898.32	165.07	28.89	**C1469-207-3500-S**	2.491	63.27	144.86	644.38	143.54	25.12
C1469-207-3750-M	1.469	37.31	0.207	5.26	3.750	95.25	2.427	61.66	2.304	58.52	201.95	898.32	152.70	26.72	**C1469-207-3750-S**	2.659	67.54	144.86	644.38	132.78	23.24
C1469-207-4000-M	1.469	37.31	0.207	5.26	4.000	101.60	2.578	65.49	2.444	62.07	201.95	898.32	142.06	24.86	**C1469-207-4000-S**	2.827	71.81	144.86	644.38	123.53	21.62
C1469-207-4250-M	1.469	37.31	0.207	5.26	4.250	107.95	2.729	69.32	2.584	65.63	201.95	898.32	132.80	23.24	**C1469-207-4250-S**	2.996	76.09	144.86	644.38	115.48	20.21
C1469-207-4500-M	1.469	37.31	0.207	5.26	4.500	114.30	2.880	73.16	2.724	69.19	201.95	898.32	124.67	21.82	**C1469-207-4500-S**	3.164	80.36	144.86	644.38	108.41	18.97
C1469-207-4750-M	1.469	37.31	0.207	5.26	4.750	120.65	3.031	76.99	2.864	72.75	201.95	898.32	117.48	20.56	**C1469-207-4750-S**	3.332	84.63	144.86	644.38	102.16	17.88
C1469-207-5000-M	1.469	37.31	0.207	5.26	5.000	127.00	3.182	80.82	3.004	76.31	201.95	898.32	111.08	19.44	**C1469-207-5000-S**	3.500	88.91	144.86	644.38	96.59	16.90
C1469-207-5250-M	1.469	37.31	0.207	5.26	5.250	133.35	3.333	84.65	3.144	79.86	201.95	898.32	105.34	18.43	**C1469-207-5250-S**	3.668	93.18	144.86	644.38	91.60	16.03
C1469-207-5500-M	1.469	37.31	0.207	5.26	5.500	139.70	3.484	88.49	3.284	83.42	201.95	898.32	100.16	17.53	**C1469-207-5500-S**	3.837	97.45	144.86	644.38	87.10	15.24
C1469-207-5750-M	1.469	37.31	0.207	5.26	5.750	146.05	3.635	92.32	3.424	86.98	201.95	898.32	95.47	16.71	**C1469-207-5750-S**	4.005	101.73	144.86	644.38	83.01	14.53
C1469-207-6000-M	1.469	37.31	0.207	5.26	6.000	152.40	3.785	96.15	3.564	90.54	201.95	898.32	91.19	15.96	**C1469-207-6000-S**	4.173	106.00	144.86	644.38	79.30	13.88
C1469-207-6250-M	1.469	37.31	0.207	5.26	6.250	158.75	3.936	99.98	3.704	94.09	201.95	898.32	87.29	15.28	**C1469-207-6250-S**	4.341	110.27	144.86	644.38	75.90	13.28
C1469-207-6500-M	1.469	37.31	0.207	5.26	6.500	165.10	4.087	103.82	3.845	97.65	201.95	898.32	83.70	14.65	**C1469-207-6500-S**	4.510	114.55	144.86	644.38	72.78	12.74
C1469-207-6750-M	1.469	37.31	0.207	5.26	6.750	171.45	4.238	107.65	3.985	101.21	201.95	898.32	80.40	14.07	**C1469-207-6750-S**	4.678	118.82	144.86	644.38	69.91	12.23
C1469-207-7000-M	1.469	37.31	0.207	5.26	7.000	177.80	4.389	111.48	4.125	104.77	201.95	898.32	77.35	13.54	**C1469-207-7000-S**	4.846	123.09	144.86	644.38	67.26	11.77
C1469-207-7500-M	1.469	37.31	0.207	5.26	7.500	190.50	4.691	119.15	4.405	111.88	201.95	898.32	71.89	12.58	**C1469-207-7500-S**	5.183	131.64	144.86	644.38	62.51	10.94
C1469-207-8000-M	1.469	37.31	0.207	5.26	8.000	203.20	4.993	126.81	4.685	119.00	201.95	898.32	67.15	11.75	**C1469-207-8000-S**	5.519	140.19	144.86	644.38	58.39	10.22
C1469-207-8500-M	1.469	37.31	0.207	5.26	8.500	215.90	5.294	134.48	4.965	126.11	201.95	898.32	63.00	11.02	**C1469-207-8500-S**	5.856	148.73	144.86	644.38	54.78	9.59
C1469-207-9000-M	1.469	37.31	0.207	5.26	9.000	228.60	5.596	142.14	5.245	133.23	201.95	898.32	59.33	10.38	**C1469-207-9000-S**	6.192	157.28	144.86	644.38	51.59	9.03
C1469-207-9500-M	1.469	37.31	0.207	5.26	9.500	241.30	5.898	149.81	5.525	140.35	201.95	898.32	56.07	9.81	**C1469-207-9500-S**	6.529	165.83	144.86	644.38	48.75	8.53
C1469-225-2000-M	1.469	37.31	0.225	5.72	2.000	50.80	1.461	37.11	1.434	36.42	253.53	1127.77	470.23	82.29	**C1469-225-2000-S**	1.561	39.66	179.41	798.08	408.90	71.56
C1469-225-2125-M	1.469	37.31	0.225	5.72	2.125	53.98	1.542	39.18	1.512	38.39	253.53	1127.77	435.14	76.15	**C1469-225-2125-S**	1.651	41.93	179.41	798.08	378.38	66.22
C1469-225-2250-M	1.469	37.31	0.225	5.72	2.250	57.15	1.624	41.25	1.589	40.36	253.53	1127.77	404.92	70.86	**C1469-225-2250-S**	1.740	44.21	179.41	798.08	352.11	61.62
C1469-225-2375-M	1.469	37.31	0.225	5.72	2.375	60.33	1.705	43.32	1.667	42.33	253.53	1127.77	378.63	66.26	**C1469-225-2375-S**	1.830	46.48	179.41	798.08	329.24	57.62
C1469-225-2500-M	1.469	37.31	0.225	5.72	2.500	63.50	1.787	45.39	1.744	44.30	253.53	1127.77	355.54	62.22	**C1469-225-2500-S**	1.920	48.76	179.41	798.08	309.17	54.10
C1469-225-2625-M	1.469	37.31	0.225	5.72	2.625	66.68	1.868	47.46	1.822	46.27	253.53	1127.77	335.11	58.64	**C1469-225-2625-S**	2.009	51.04	179.41	798.08	291.40	50.99
C1469-225-2750-M	1.469	37.31	0.225	5.72	2.750	69.85	1.950	49.53	1.899	48.24	253.53	1127.77	316.90	55.46	**C1469-225-2750-S**	2.099	53.31	179.41	798.08	275.56	48.22
C1469-225-2875-M	1.469	37.31	0.225	5.72	2.875	73.03	2.031	51.60	1.977	50.21	253.53	1127.77	300.56	52.60	**C1469-225-2875-S**	2.189	55.59	179.41	798.08	261.36	45.74
C1469-225-3000-M	1.469	37.31	0.225	5.72	3.000	76.20	2.113	53.67	2.054	52.18	253.53	1127.77	285.83	50.02	**C1469-225-3000-S**	2.278	57.86	179.41	798.08	248.55	43.50
C1469-225-3250-M	1.469	37.31	0.225	5.72	3.250	82.55	2.276	57.81	2.209	56.12	253.53	1127.77	260.31	45.55	**C1469-225-3250-S**	2.457	62.42	179.41	798.08	226.35	39.61
C1469-225-3500-M	1.469	37.31	0.225	5.72	3.500	88.90	2.439	61.95	2.364	60.06	253.53	1127.77	238.97	41.82	**C1469-225-3500-S**	2.637	66.97	179.41	798.08	207.80	36.37
C1469-225-3750-M	1.469	37.31	0.225	5.72	3.750	95.25	2.602	66.09	2.520	64.00	253.53	1127.77	220.87	38.65	**C1469-225-3750-S**	2.816	71.52	179.41	798.08	192.06	33.61
C1469-225-4000-M	1.469	37.31	0.225	5.72	4.000	101.60	2.765	70.23	2.675	67.93	253.53	1127.77	205.31	35.93	**C1469-225-4000-S**	2.995	76.07	179.41	798.08	178.53	31.24
C1469-225-4250-M	1.469	37.31	0.225	5.72	4.250	107.95	2.928	74.38	2.830	71.87	253.53	1127.77	191.81	33.57	**C1469-225-4250-S**	3.174	80.63	179.41	798.08	166.79	29.19
C1469-225-4500-M	1.469	37.31	0.225	5.72	4.500	114.30	3.091	78.52	2.985	75.81	253.53	1127.77	179.97	31.49	**C1469-225-4500-S**	3.354	85.18	179.41	798.08	156.49	27.39

Part Numbers with an "*" are squared and not ground. **Part Numbers in bold** represent the newly expanded Associated Spring RAYMOND compression spring offering.

MUSIC WIRE															STAINLESS STEEL					
Catalog #	Outside Diameter (OD)		Wire Diameter (d)		Free Length (L) Approx		Load Length (L_1)		Solid Height (Sh) Approx		Load (P) at L_1		Spring Rate (R)		Catalog #	Load Length (L_1)		Load (P) at L_1		Spring Rate (R)	
	in	mm	in	mm	in	mm	in	mm	in	mm	lb	N	lb/in	N/mm		in	mm	lb	N	lb/in	N/mm
C1469-225-4750-M	1.469	37.31	0.225	5.72	4.750	120.65	3.254	82.66	3.140	79.75	253.53	1127.77	169.50	29.66	C1469-225-4750-S	3.533	89.73	179.41	798.08	147.39	25.79
C1469-225-5000-M	1.469	37.31	0.225	5.72	5.000	127.00	3.417	86.80	3.295	83.69	253.53	1127.77	160.19	28.03	C1469-225-5000-S	3.712	94.28	179.41	798.08	139.30	24.38
C1469-225-5250-M	1.469	37.31	0.225	5.72	5.250	133.35	3.580	90.94	3.450	87.63	253.53	1127.77	151.85	26.57	C1469-225-5250-S	3.891	98.84	179.41	798.08	132.04	23.11
C1469-225-5500-M	1.469	37.31	0.225	5.72	5.500	139.70	3.743	95.08	3.605	91.57	253.53	1127.77	144.33	25.26	C1469-225-5500-S	4.070	103.39	179.41	798.08	125.50	21.96
C1469-225-5750-M	1.469	37.31	0.225	5.72	5.750	146.05	3.906	99.22	3.760	95.51	253.53	1127.77	137.52	24.07	C1469-225-5750-S	4.250	107.94	179.41	798.08	119.58	20.93
C1469-225-6000-M	1.469	37.31	0.225	5.72	6.000	152.40	4.069	103.36	3.915	99.45	253.53	1127.77	131.33	22.98	C1469-225-6000-S	4.429	112.49	179.41	798.08	114.20	19.98
C1469-225-6250-M	1.469	37.31	0.225	5.72	6.250	158.75	4.232	107.50	4.070	103.38	253.53	1127.77	125.67	21.99	C1469-225-6250-S	4.608	117.05	179.41	798.08	109.27	19.12
C1469-225-6500-M	1.469	37.31	0.225	5.72	6.500	165.10	4.396	111.65	4.225	107.32	253.53	1127.77	120.47	21.08	C1469-225-6500-S	4.787	121.60	179.41	798.08	104.76	18.33
C1469-225-6750-M	1.469	37.31	0.225	5.72	6.750	171.45	4.559	115.79	4.380	111.26	253.53	1127.77	115.69	20.25	C1469-225-6750-S	4.967	126.15	179.41	798.08	100.60	17.61
C1469-225-7000-M	1.469	37.31	0.225	5.72	7.000	177.80	4.722	119.93	4.535	115.20	253.53	1127.77	111.28	19.47	C1469-225-7000-S	5.146	130.70	179.41	798.08	96.76	16.93
C1469-225-7500-M	1.469	37.31	0.225	5.72	7.500	190.50	5.048	128.21	4.846	123.08	253.53	1127.77	103.38	18.09	C1469-225-7500-S	5.504	139.81	179.41	798.08	89.90	15.73
C1469-225-8000-M	1.469	37.31	0.225	5.72	8.000	203.20	5.374	136.49	5.156	130.96	253.53	1127.77	96.54	16.89	C1469-225-8000-S	5.863	148.91	179.41	798.08	83.95	14.69
C1469-225-8500-M	1.469	37.31	0.225	5.72	8.500	215.90	5.700	144.78	5.466	138.84	253.53	1127.77	90.54	15.84	C1469-225-8500-S	6.221	158.02	179.41	798.08	78.73	13.78
C1469-225-9000-M	1.469	37.31	0.225	5.72	9.000	228.60	6.026	153.06	5.776	146.71	253.53	1127.77	85.25	14.92	C1469-225-9000-S	6.580	167.12	179.41	798.08	74.13	12.97
C1469-225-9500-M	1.469	37.31	0.225	5.72	9.500	241.30	6.352	161.34	6.086	154.59	253.53	1127.77	80.54	14.09	C1469-225-9500-S	6.938	176.23	179.41	798.08	70.03	12.26
C1469-250-2125-M	1.469	37.31	0.250	6.35	2.125	53.98	1.657	42.09	1.653	42.00	337.34	1500.55	721.14	126.20	C1469-250-2125-S	1.751	44.48	234.35	1042.42	627.08	109.74
C1469-250-2250-M	1.469	37.31	0.250	6.35	2.250	57.15	1.746	44.35	1.740	44.20	337.34	1500.55	669.63	117.19	C1469-250-2250-S	1.848	46.93	234.35	1042.42	582.29	101.90
C1469-250-2375-M	1.469	37.31	0.250	6.35	2.375	60.33	1.835	46.62	1.827	46.41	337.34	1500.55	624.99	109.37	C1469-250-2375-S	1.944	49.37	234.35	1042.42	543.47	95.11
C1469-250-2500-M	1.469	37.31	0.250	6.35	2.500	63.50	1.924	48.88	1.914	48.61	337.34	1500.55	585.93	102.54	C1469-250-2500-S	2.040	51.82	234.35	1042.42	509.50	89.16
C1469-250-2625-M	1.469	37.31	0.250	6.35	2.625	66.68	2.013	51.14	2.001	50.82	337.34	1500.55	551.46	96.51	C1469-250-2625-S	2.136	54.26	234.35	1042.42	479.53	83.92
C1469-250-2750-M	1.469	37.31	0.250	6.35	2.750	69.85	2.102	53.40	2.087	53.02	337.34	1500.55	520.83	91.14	C1469-250-2750-S	2.233	56.71	234.35	1042.42	452.89	79.26
C1469-250-2875-M	1.469	37.31	0.250	6.35	2.875	73.03	2.191	55.66	2.174	55.22	337.34	1500.55	493.41	86.35	C1469-250-2875-S	2.329	59.15	234.35	1042.42	429.06	75.08
C1469-250-3000-M	1.469	37.31	0.250	6.35	3.000	76.20	2.280	57.92	2.261	57.43	337.34	1500.55	468.74	82.03	C1469-250-3000-S	2.425	61.60	234.35	1042.42	407.60	71.33
C1469-250-3250-M	1.469	37.31	0.250	6.35	3.250	82.55	2.458	62.44	2.435	61.84	337.34	1500.55	426.13	74.57	C1469-250-3250-S	2.618	66.49	234.35	1042.42	370.55	64.85
C1469-250-3500-M	1.469	37.31	0.250	6.35	3.500	88.90	2.636	66.96	2.608	66.25	337.34	1500.55	390.62	68.36	C1469-250-3500-S	2.810	71.38	234.35	1042.42	339.67	59.44
C1469-250-3750-M	1.469	37.31	0.250	6.35	3.750	95.25	2.814	71.49	2.782	70.66	337.34	1500.55	360.57	63.10	C1469-250-3750-S	3.003	76.27	234.35	1042.42	313.54	54.87
C1469-250-4000-M	1.469	37.31	0.250	6.35	4.000	101.60	2.992	76.01	2.955	75.07	337.34	1500.55	334.82	58.59	C1469-250-4000-S	3.195	81.16	234.35	1042.42	291.15	50.95
C1469-250-4250-M	1.469	37.31	0.250	6.35	4.250	107.95	3.171	80.53	3.129	79.48	337.34	1500.55	312.50	54.69	C1469-250-4250-S	3.388	86.04	234.35	1042.42	271.74	47.55
C1469-250-4500-M	1.469	37.31	0.250	6.35	4.500	114.30	3.349	85.05	3.303	83.89	337.34	1500.55	292.97	51.27	C1469-250-4500-S	3.580	90.93	234.35	1042.42	254.75	44.58
C1469-250-4750-M	1.469	37.31	0.250	6.35	4.750	120.65	3.527	89.57	3.476	88.30	337.34	1500.55	275.73	48.25	C1469-250-4750-S	3.773	95.82	234.35	1042.42	239.77	41.96
C1469-250-5000-M	1.469	37.31	0.250	6.35	5.000	127.00	3.705	94.10	3.650	92.71	337.34	1500.55	260.41	45.57	C1469-250-5000-S	3.965	100.71	234.35	1042.42	226.45	39.63
C1469-250-5250-M	1.469	37.31	0.250	6.35	5.250	133.35	3.883	98.62	3.823	97.11	337.34	1500.55	246.71	43.17	C1469-250-5250-S	4.158	105.60	234.35	1042.42	214.53	37.54
C1469-250-5500-M	1.469	37.31	0.250	6.35	5.500	139.70	4.061	103.14	3.997	101.52	337.34	1500.55	234.37	41.02	C1469-250-5500-S	4.350	110.49	234.35	1042.42	203.80	35.67
C1469-250-5750-M	1.469	37.31	0.250	6.35	5.750	146.05	4.239	107.66	4.171	105.93	337.34	1500.55	223.21	39.06	C1469-250-5750-S	4.543	115.38	234.35	1042.42	194.10	33.97
C1469-250-6000-M	1.469	37.31	0.250	6.35	6.000	152.40	4.417	112.19	4.344	110.34	337.34	1500.55	213.07	37.29	C1469-250-6000-S	4.735	120.27	234.35	1042.42	185.27	32.42
C1469-250-6250-M	1.469	37.31	0.250	6.35	6.250	158.75	4.595	116.71	4.518	114.75	337.34	1500.55	203.80	35.67	C1469-250-6250-S	4.928	125.16	234.35	1042.42	177.22	31.01
C1469-250-6500-M	1.469	37.31	0.250	6.35	6.500	165.10	4.773	121.23	4.691	119.16	337.34	1500.55	195.31	34.18	C1469-250-6500-S	5.120	130.05	234.35	1042.42	169.84	29.72
C1469-250-6750-M	1.469	37.31	0.250	6.35	6.750	171.45	4.951	125.75	4.865	123.57	337.34	1500.55	187.50	32.81	C1469-250-6750-S	5.313	134.94	234.35	1042.42	163.04	28.53
C1469-250-7000-M	1.469	37.31	0.250	6.35	7.000	177.80	5.129	130.27	5.039	127.98	337.34	1500.55	180.29	31.55	C1469-250-7000-S	5.505	139.83	234.35	1042.42	156.77	27.43
C1469-250-7500-M	1.469	37.31	0.250	6.35	7.500	190.50	5.485	139.32	5.386	136.80	337.34	1500.55	167.41	29.30	C1469-250-7500-S	5.890	149.61	234.35	1042.42	145.57	25.48
C1469-250-8000-M	1.469	37.31	0.250	6.35	8.000	203.20	5.841	148.36	5.733	145.62	337.34	1500.55	156.25	27.34	C1469-250-8000-S	6.275	159.39	234.35	1042.42	135.87	23.78
C1469-250-8500-M	1.469	37.31	0.250	6.35	8.500	215.90	6.197	157.41	6.080	154.44	337.34	1500.55	146.48	25.63	C1469-250-8500-S	6.660	169.17	234.35	1042.42	127.38	22.29
C1469-250-9000-M	1.469	37.31	0.250	6.35	9.000	228.60	6.553	166.45	6.427	163.26	337.34	1500.55	137.87	24.13	C1469-250-9000-S	7.045	178.95	234.35	1042.42	119.88	20.98
C1469-250-9500-M	1.469	37.31	0.250	6.35	9.500	241.30	6.909	175.49	6.775	172.08	337.34	1500.55	130.21	22.79	C1469-250-9500-S	7.430	188.73	234.35	1042.42	113.22	19.81
C1528-125-2625-M	1.528	38.81	0.125	3.18	2.625	66.68	1.047	26.60	0.807	20.51	48.29	214.80	30.61	5.36	C1528-125-2625-S	1.240	31.48	36.88	164.03	26.62	4.66
C1528-125-2750-M	1.528	38.81	0.125	3.18	2.750	69.85	1.089	27.67	0.836	21.24	48.29	214.80	29.08	5.09	C1528-125-2750-S	1.292	32.81	36.88	164.03	25.29	4.43
C1528-125-2875-M	1.528	38.81	0.125	3.18	2.875	73.03	1.131	28.74	0.865	21.97	48.29	214.80	27.69	4.85	C1528-125-2875-S	1.344	34.13	36.88	164.03	24.08	4.21
C1528-125-3000-M	1.528	38.81	0.125	3.18	3.000	76.20	1.173	29.80	0.893	22.69	48.29	214.80	26.44	4.63	C1528-125-3000-S	1.396	35.45	36.88	164.03	22.99	4.02
C1528-125-3250-M	1.528	38.81	0.125	3.18	3.250	82.55	1.257	31.93	0.951	24.15	48.29	214.80	24.23	4.24	C1528-125-3250-S	1.500	38.10	36.88	164.03	21.07	3.69
C1528-125-3500-M	1.528	38.81	0.125	3.18	3.500	88.90	1.341	34.06	1.008	25.61	48.29	214.80	22.37	3.91	C1528-125-3500-S	1.604	40.74	36.88	164.03	19.45	3.40
C1528-125-3750-M	1.528	38.81	0.125	3.18	3.750	95.25	1.425	36.20	1.066	27.06	48.29	214.80	20.77	3.63	C1528-125-3750-S	1.708	43.39	36.88	164.03	18.06	3.16
C1528-125-4000-M	1.528	38.81	0.125	3.18	4.000	101.60	1.509	38.33	1.123	28.52	48.29	214.80	19.39	3.39	C1528-125-4000-S	1.812	46.04	36.88	164.03	16.86	2.95
C1528-125-4250-M	1.528	38.81	0.125	3.18	4.250	107.95	1.593	40.46	1.180	29.98	48.29	214.80	18.17	3.18	C1528-125-4250-S	1.917	48.68	36.88	164.03	15.80	2.77
C1528-125-4500-M	1.528	38.81	0.125	3.18	4.500	114.30	1.677	42.59	1.238	31.44	48.29	214.80	17.11	2.99	C1528-125-4500-S	2.021	51.33	36.88	164.03	14.87	2.60
C1528-125-4750-M	1.528	38.81	0.125	3.18	4.750	120.65	1.761	44.72	1.295	32.89	48.29	214.80	16.16	2.83	C1528-125-4750-S	2.125	53.97	36.88	164.03	14.05	2.46
C1528-125-5000-M	1.528	38.81	0.125	3.18	5.000	127.00	1.845	46.86	1.352	34.35	48.29	214.80	15.30	2.68	C1528-125-5000-S	2.229	56.62	36.88	164.03	13.31	2.33
C1528-125-5250-M	1.528	38.81	0.125	3.18	5.250	133.35	1.929	48.99	1.410	35.81	48.29	214.80	14.54	2.54	C1528-125-5250-S	2.333	59.26	36.88	164.03	12.64	2.21
C1528-125-5500-M	1.528	38.81	0.125	3.18	5.500	139.70	2.013	51.12	1.467	37.26	48.29	214.80	13.85	2.42	C1528-125-5500-S	2.437	61.91	36.88	164.03	12.04	2.11
C1528-125-5750-M	1.528	38.81	0.125	3.18	5.750	146.05	2.097	53.25	1.524	38.72	48.29	214.80	13.22	2.31	C1528-125-5750-S	2.542	64.56	36.88	164.03	11.49	2.01
C1528-125-6000-M	1.528	38.81	0.125	3.18	6.000	152.40	2.180	55.38	1.582	40.18	48.29	214.80	12.64	2.21	C1528-125-6000-S	2.646	67.20	36.88	164.03	10.99	1.92
C1528-125-6250-M	1.528	38.81	0.125	3.18	6.250	158.75	2.264	57.52	1.639	41.63	48.29	214.80	12.12	2.12	C1528-125-6250-S	2.750	69.85	36.88	164.03	10.54	1.84
C1528-125-6500-M	1.528	38.81	0.125	3.18	6.500	165.10	2.348	59.65	1.696	43.09	48.29	214.80	11.63	2.04	C1528-125-6500-S	2.854	72.49	36.88	164.03	10.11	1.77
C1528-125-6750-M	1.528	38.81	0.125	3.18	6.750	171.45	2.432	61.78	1.754	44.55	48.29	214.80	11.18	1.96	C1528-125-6750-S	2.958	75.14	36.88	164.03	9.73	1.70
C1528-125-7000-M	1.528	38.81	0.125	3.18	7.000	177.80	2.516	63.91	1.811	46.00	48.29	214.80	10.77	1.88	C1528-125-7000-S	3.062	77.78	36.88	164.03	9.37	1.64

FOR INFORMATION ON ALTERNATIVE FINISHES, SEE PAGE 311

Part Numbers with an "*" are squared and not ground. **Part Numbers in bold** represent the newly expanded Associated Spring RAYMOND compression spring offering.

MUSIC WIRE																STAINLESS STEEL						
Catalog #	Outside Diameter (OD)		Wire Diameter (d)		Free Length (L) Approx		Load Length (L_1)		Solid Height (Sh) Approx		Load (P) at L_1		Spring Rate (R)		Catalog #	Load Length (L_1)		Load (P) at L_1		Spring Rate (R)	
	in	mm	in	mm	in	mm	in	mm	in	mm	lb	N	lb/in	N/mm		in	mm	lb	N	lb/in	N/mm
C1528-125-7500-M	1.528	38.81	0.125	3.18	7.500	190.50	2.684	68.18	1.926	48.92	48.29	214.80	10.03	1.75	C1528-125-7500-S	3.271	83.08	36.88	164.03	8.72	1.53
C1528-125-8000-M	1.528	38.81	0.125	3.18	8.000	203.20	2.852	72.44	2.041	51.83	48.29	214.80	9.38	1.64	C1528-125-8000-S	3.479	88.37	36.88	164.03	8.16	1.43
C1528-125-8500-M	1.528	38.81	0.125	3.18	8.500	215.90	3.020	76.70	2.155	54.75	48.29	214.80	8.81	1.54	C1528-125-8500-S	3.687	93.66	36.88	164.03	7.66	1.34
C1528-125-9000-M	1.528	38.81	0.125	3.18	9.000	228.60	3.188	80.97	2.270	57.66	48.29	214.80	8.31	1.45	C1528-125-9000-S	3.896	98.95	36.88	164.03	7.22	1.26
C1528-125-9500-M	1.528	38.81	0.125	3.18	9.500	241.30	3.356	85.23	2.385	60.57	48.29	214.80	7.86	1.38	C1528-125-9500-S	4.104	104.24	36.88	164.03	6.83	1.20
C1528-135-2500-M	1.528	38.81	0.135	3.43	2.500	63.50	1.084	27.54	0.876	22.25	59.82	266.09	42.25	7.39	C1528-135-2500-S	1.266	32.16	45.34	201.68	36.74	6.43
C1528-135-2625-M	1.528	38.81	0.135	3.43	2.625	66.68	1.130	28.70	0.909	23.10	59.82	266.09	40.01	7.00	C1528-135-2625-S	1.322	33.57	45.34	201.68	34.79	6.09
C1528-135-2750-M	1.528	38.81	0.135	3.43	2.750	69.85	1.176	29.86	0.943	23.94	59.82	266.09	37.99	6.65	C1528-135-2750-S	1.378	34.99	45.34	201.68	33.04	5.78
C1528-135-2875-M	1.528	38.81	0.135	3.43	2.875	73.03	1.221	31.02	0.976	24.78	59.82	266.09	36.17	6.33	C1528-135-2875-S	1.433	36.41	45.34	201.68	31.45	5.50
C1528-135-3000-M	1.528	38.81	0.135	3.43	3.000	76.20	1.267	32.18	1.009	25.63	59.82	266.09	34.51	6.04	C1528-135-3000-S	1.489	37.83	45.34	201.68	30.01	5.25
C1528-135-3250-M	1.528	38.81	0.135	3.43	3.250	82.55	1.358	34.50	1.075	27.32	59.82	266.09	31.62	5.53	C1528-135-3250-S	1.601	40.66	45.34	201.68	27.49	4.81
C1528-135-3500-M	1.528	38.81	0.135	3.43	3.500	88.90	1.449	36.81	1.142	29.00	59.82	266.09	29.17	5.10	C1528-135-3500-S	1.713	43.50	45.34	201.68	25.37	4.44
C1528-135-3750-M	1.528	38.81	0.135	3.43	3.750	95.25	1.541	39.13	1.208	30.69	59.82	266.09	27.08	4.74	C1528-135-3750-S	1.824	46.34	45.34	201.68	23.54	4.12
C1528-135-4000-M	1.528	38.81	0.135	3.43	4.000	101.60	1.632	41.45	1.275	32.38	59.82	266.09	25.26	4.42	C1528-135-4000-S	1.936	49.17	45.34	201.68	21.97	3.84
C1528-135-4250-M	1.528	38.81	0.135	3.43	4.250	107.95	1.723	43.77	1.341	34.07	59.82	266.09	23.67	4.14	C1528-135-4250-S	2.048	52.01	45.34	201.68	20.59	3.60
C1528-135-4500-M	1.528	38.81	0.135	3.43	4.500	114.30	1.814	46.09	1.408	35.75	59.82	266.09	22.27	3.90	C1528-135-4500-S	2.159	54.84	45.34	201.68	19.37	3.39
C1528-135-4750-M	1.528	38.81	0.135	3.43	4.750	120.65	1.906	48.41	1.474	37.44	59.82	266.09	21.03	3.68	C1528-135-4750-S	2.271	57.68	45.34	201.68	18.29	3.20
C1528-135-5000-M	1.528	38.81	0.135	3.43	5.000	127.00	1.997	50.73	1.540	39.13	59.82	266.09	19.92	3.49	C1528-135-5000-S	2.383	60.52	45.34	201.68	17.32	3.03
C1528-135-5250-M	1.528	38.81	0.135	3.43	5.250	133.35	2.088	53.04	1.607	40.82	59.82	266.09	18.92	3.31	C1528-135-5250-S	2.494	63.35	45.34	201.68	16.45	2.88
C1528-135-5500-M	1.528	38.81	0.135	3.43	5.500	139.70	2.180	55.36	1.673	42.50	59.82	266.09	18.02	3.15	C1528-135-5500-S	2.606	66.19	45.34	201.68	15.67	2.74
C1528-135-5750-M	1.528	38.81	0.135	3.43	5.750	146.05	2.271	57.68	1.740	44.19	59.82	266.09	17.19	3.01	C1528-135-5750-S	2.717	69.02	45.34	201.68	14.95	2.62
C1528-135-6000-M	1.528	38.81	0.135	3.43	6.000	152.40	2.362	60.00	1.806	45.88	59.82	266.09	16.44	2.88	C1528-135-6000-S	2.829	71.86	45.34	201.68	14.30	2.50
C1528-135-6250-M	1.528	38.81	0.135	3.43	6.250	158.75	2.453	62.32	1.873	47.57	59.82	266.09	15.76	2.76	C1528-135-6250-S	2.941	74.70	45.34	201.68	13.70	2.40
C1528-135-6500-M	1.528	38.81	0.135	3.43	6.500	165.10	2.545	64.64	1.939	49.25	59.82	266.09	15.12	2.65	C1528-135-6500-S	3.052	77.53	45.34	201.68	13.15	2.30
C1528-135-6750-M	1.528	38.81	0.135	3.43	6.750	171.45	2.636	66.95	2.006	50.94	59.82	266.09	14.54	2.54	C1528-135-6750-S	3.164	80.37	45.34	201.68	12.64	2.21
C1528-135-7000-M	1.528	38.81	0.135	3.43	7.000	177.80	2.727	69.27	2.072	52.63	59.82	266.09	14.00	2.45	C1528-135-7000-S	3.276	83.20	45.34	201.68	12.17	2.13
C1528-135-7500-M	1.528	38.81	0.135	3.43	7.500	190.50	2.910	73.91	2.205	56.00	59.82	266.09	13.03	2.28	C1528-135-7500-S	3.499	88.88	45.34	201.68	11.33	1.98
C1528-135-8000-M*	1.528	38.81	0.135	3.43	8.000	203.20	3.178	80.72	2.444	62.07	59.82	266.09	12.41	2.17	C1528-135-8000-S*	3.797	96.45	45.34	201.68	10.79	1.89
C1528-135-8500-M*	1.528	38.81	0.135	3.43	8.500	215.90	3.361	85.36	2.576	65.44	59.82	266.09	11.64	2.04	C1528-135-8500-S*	4.020	102.12	45.34	201.68	10.12	1.77
C1528-135-9000-M*	1.528	38.81	0.135	3.43	9.000	228.60	3.543	90.00	2.709	68.82	59.82	266.09	10.96	1.92	C1528-135-9000-S*	4.244	107.79	45.34	201.68	9.53	1.67
C1528-135-9500-M*	1.528	38.81	0.135	3.43	9.500	241.30	3.726	94.64	2.842	72.19	59.82	266.09	10.36	1.81	C1528-135-9500-S*	4.467	113.46	45.34	201.68	9.01	1.58
C1528-148-2375-M	1.528	38.81	0.148	3.76	2.375	60.33	1.137	28.88	0.965	24.50	77.21	343.47	62.38	10.92	C1528-148-2375-S	1.307	33.19	57.95	257.77	54.24	9.49
C1528-148-2500-M	1.528	38.81	0.148	3.76	2.500	63.50	1.188	30.17	1.004	25.50	77.21	343.47	58.84	10.30	C1528-148-2500-S	1.367	34.73	57.95	257.77	51.16	8.95
C1528-148-2625-M	1.528	38.81	0.148	3.76	2.625	66.68	1.238	31.45	1.043	26.50	77.21	343.47	55.68	9.74	C1528-148-2625-S	1.428	36.28	57.95	257.77	48.42	8.47
C1528-148-2750-M	1.528	38.81	0.148	3.76	2.750	69.85	1.289	32.74	1.083	27.50	77.21	343.47	52.85	9.25	C1528-148-2750-S	1.489	37.82	57.95	257.77	45.95	8.04
C1528-148-2875-M	1.528	38.81	0.148	3.76	2.875	73.03	1.339	34.02	1.122	28.49	77.21	343.47	50.28	8.80	C1528-148-2875-S	1.550	39.36	57.95	257.77	43.73	7.65
C1528-148-3000-M	1.528	38.81	0.148	3.76	3.000	76.20	1.390	35.31	1.161	29.49	77.21	343.47	47.96	8.39	C1528-148-3000-S	1.610	40.91	57.95	257.77	41.70	7.30
C1528-148-3250-M	1.528	38.81	0.148	3.76	3.250	82.55	1.491	37.87	1.240	31.49	77.21	343.47	43.90	7.68	C1528-148-3250-S	1.732	43.99	57.95	257.77	38.17	6.68
C1528-148-3500-M	1.528	38.81	0.148	3.76	3.500	88.90	1.592	40.44	1.318	33.49	77.21	343.47	40.48	7.08	C1528-148-3500-S	1.854	47.08	57.95	257.77	35.20	6.16
C1528-148-3750-M	1.528	38.81	0.148	3.76	3.750	95.25	1.693	43.01	1.397	35.48	77.21	343.47	37.55	6.57	C1528-148-3750-S	1.975	50.17	57.95	257.77	32.65	5.71
C1528-148-4000-M	1.528	38.81	0.148	3.76	4.000	101.60	1.795	45.58	1.476	37.48	77.21	343.47	35.01	6.13	C1528-148-4000-S	2.097	53.25	57.95	257.77	30.44	5.33
C1528-148-4250-M	1.528	38.81	0.148	3.76	4.250	107.95	1.896	48.15	1.554	39.48	77.21	343.47	32.80	5.74	C1528-148-4250-S	2.218	56.34	57.95	257.77	28.52	4.99
C1528-148-4500-M	1.528	38.81	0.148	3.76	4.500	114.30	1.997	50.72	1.633	41.47	77.21	343.47	30.85	5.40	C1528-148-4500-S	2.340	59.43	57.95	257.77	26.82	4.69
C1528-148-4750-M	1.528	38.81	0.148	3.76	4.750	120.65	2.098	53.29	1.711	43.47	77.21	343.47	29.12	5.10	C1528-148-4750-S	2.461	62.51	57.95	257.77	25.32	4.43
C1528-148-5000-M	1.528	38.81	0.148	3.76	5.000	127.00	2.199	55.86	1.790	45.47	77.21	343.47	27.57	4.82	C1528-148-5000-S	2.583	65.60	57.95	257.77	23.97	4.20
C1528-148-5250-M	1.528	38.81	0.148	3.76	5.250	133.35	2.300	58.43	1.869	47.47	77.21	343.47	26.18	4.58	C1528-148-5250-S	2.704	68.69	57.95	257.77	22.76	3.98
C1528-148-5500-M	1.528	38.81	0.148	3.76	5.500	139.70	2.401	61.00	1.947	49.46	77.21	343.47	24.92	4.36	C1528-148-5500-S	2.826	71.77	57.95	257.77	21.67	3.79
C1528-148-5750-M	1.528	38.81	0.148	3.76	5.750	146.05	2.503	63.57	2.026	51.46	77.21	343.47	23.78	4.16	C1528-148-5750-S	2.947	74.86	57.95	257.77	20.68	3.62
C1528-148-6000-M	1.528	38.81	0.148	3.76	6.000	152.40	2.604	66.13	2.105	53.46	77.21	343.47	22.74	3.98	C1528-148-6000-S	3.069	77.95	57.95	257.77	19.77	3.46
C1528-148-6250-M	1.528	38.81	0.148	3.76	6.250	158.75	2.705	68.70	2.183	55.45	77.21	343.47	21.78	3.81	C1528-148-6250-S	3.190	81.03	57.95	257.77	18.94	3.31
C1528-148-6500-M	1.528	38.81	0.148	3.76	6.500	165.10	2.806	71.27	2.262	57.45	77.21	343.47	20.90	3.66	C1528-148-6500-S	3.312	84.12	57.95	257.77	18.18	3.18
C1528-148-6750-M*	1.528	38.81	0.148	3.76	6.750	171.45	2.995	76.08	2.449	62.21	77.21	343.47	20.57	3.60	C1528-148-6750-S*	3.509	89.14	57.95	257.77	17.88	3.13
C1528-148-7000-M*	1.528	38.81	0.148	3.76	7.000	177.80	3.096	78.65	2.528	64.21	77.21	343.47	19.78	3.46	C1528-148-7000-S*	3.631	92.23	57.95	257.77	17.20	3.01
C1528-148-7500-M*	1.528	38.81	0.148	3.76	7.500	190.50	3.299	83.79	2.685	68.20	77.21	343.47	18.38	3.22	C1528-148-7500-S*	3.874	98.40	57.95	257.77	15.98	2.80
C1528-148-8000-M*	1.528	38.81	0.148	3.76	8.000	203.20	3.501	88.93	2.842	72.20	77.21	343.47	17.16	3.00	C1528-148-8000-S*	4.117	104.57	57.95	257.77	14.92	2.61
C1528-148-8500-M*	1.528	38.81	0.148	3.76	8.500	215.90	3.703	94.06	3.000	76.19	77.21	343.47	16.10	2.82	C1528-148-8500-S*	4.360	110.75	57.95	257.77	14.00	2.45
C1528-148-9000-M*	1.528	38.81	0.148	3.76	9.000	228.60	3.906	99.20	3.157	80.18	77.21	343.47	15.16	2.65	C1528-148-9000-S*	4.603	116.92	57.95	257.77	13.18	2.31
C1528-148-9500-M*	1.528	38.81	0.148	3.76	9.500	241.30	4.108	104.34	3.314	84.18	77.21	343.47	14.32	2.51	C1528-148-9500-S*	4.846	123.09	57.95	257.77	12.45	2.18
C1528-162-2250-M	1.528	38.81	0.162	4.12	2.250	57.15	1.186	30.14	1.049	26.64	99.18	441.19	93.26	16.32	C1528-162-2250-S	1.342	34.08	73.64	327.57	81.09	14.19
C1528-162-2375-M	1.528	38.81	0.162	4.12	2.375	60.33	1.242	31.56	1.095	27.80	99.18	441.19	87.57	15.33	C1528-162-2375-S	1.408	35.76	73.64	327.57	76.15	13.33
C1528-162-2500-M	1.528	38.81	0.162	4.12	2.500	63.50	1.298	32.98	1.141	28.97	99.18	441.19	82.54	14.45	C1528-162-2500-S	1.474	37.44	73.64	327.57	71.78	12.56
C1528-162-2625-M	1.528	38.81	0.162	4.12	2.625	66.68	1.354	34.40	1.187	30.14	99.18	441.19	78.06	13.66	C1528-162-2625-S	1.540	39.12	73.64	327.57	67.88	11.88
C1528-162-2750-M	1.528	38.81	0.162	4.12	2.750	69.85	1.410	35.82	1.233	31.31	99.18	441.19	74.04	12.96	C1528-162-2750-S	1.606	40.80	73.64	327.57	64.38	11.27
C1528-162-2875-M	1.528	38.81	0.162	4.12	2.875	73.03	1.466	37.24	1.279	32.48	99.18	441.19	70.41	12.32	C1528-162-2875-S	1.672	42.47	73.64	327.57	61.23	10.71

Part Numbers with an "*" are squared and not ground. **Part Numbers in bold** represent the newly expanded Associated Spring RAYMOND compression spring offering.

MUSIC WIRE														
Catalog #	Outside Diameter (OD)		Wire Diameter (d)		Free Length (L) Approx		Load Length (L_1)		Solid Height (Sh) Approx		Load (P) at L_1		Spring Rate (R)	
	in	mm	in	mm	in	mm	in	mm	in	mm	lb	N	lb/in	N/mm
C1528-162-3000-M	1.528	38.81	0.162	4.12	3.000	76.20	1.522	38.67	1.325	33.64	99.18	441.19	67.12	11.75
C1528-162-3250-M	1.528	38.81	0.162	4.12	3.250	82.55	1.634	41.51	1.417	35.98	99.18	441.19	61.39	10.74
C1528-162-3500-M	1.528	38.81	0.162	4.12	3.500	88.90	1.746	44.35	1.509	38.32	99.18	441.19	56.55	9.90
C1528-162-3750-M	1.528	38.81	0.162	4.12	3.750	95.25	1.858	47.20	1.600	40.65	99.18	441.19	52.43	9.17
C1528-162-4000-M	1.528	38.81	0.162	4.12	4.000	101.60	1.970	50.04	1.692	42.99	99.18	441.19	48.86	8.55
C1528-162-4250-M	1.528	38.81	0.162	4.12	4.250	107.95	2.082	52.88	1.784	45.32	99.18	441.19	45.75	8.01
C1528-162-4500-M	1.528	38.81	0.162	4.12	4.500	114.30	2.194	55.73	1.876	47.66	99.18	441.19	43.01	7.53
C1528-162-4750-M	1.528	38.81	0.162	4.12	4.750	120.65	2.306	58.57	1.968	50.00	99.18	441.19	40.58	7.10
C1528-162-5000-M	1.528	38.81	0.162	4.12	5.000	127.00	2.418	61.41	2.060	52.33	99.18	441.19	38.41	6.72
C1528-162-5250-M	1.528	38.81	0.162	4.12	5.250	133.35	2.530	64.26	2.152	54.67	99.18	441.19	36.46	6.38
C1528-162-5500-M	1.528	38.81	0.162	4.12	5.500	139.70	2.642	67.10	2.244	57.00	99.18	441.19	34.70	6.07
C1528-162-5750-M	1.528	38.81	0.162	4.12	5.750	146.05	2.754	69.94	2.336	59.34	99.18	441.19	33.10	5.79
C1528-162-6000-M	1.528	38.81	0.162	4.12	6.000	152.40	2.866	72.79	2.428	61.68	99.18	441.19	31.64	5.54
C1528-162-6250-M	1.528	38.81	0.162	4.12	6.250	158.75	2.978	75.63	2.520	64.01	99.18	441.19	30.31	5.30
C1528-162-6500-M	1.528	38.81	0.162	4.12	6.500	165.10	3.090	78.47	2.612	66.35	99.18	441.19	29.08	5.09
C1528-162-6750-M	1.528	38.81	0.162	4.12	6.750	171.45	3.202	81.32	2.704	68.68	99.18	441.19	27.95	4.89
C1528-162-7000-M	1.528	38.81	0.162	4.12	7.000	177.80	3.313	84.16	2.796	71.02	99.18	441.19	26.90	4.71
C1528-162-7500-M*	1.528	38.81	0.162	4.12	7.500	190.50	3.627	92.12	3.090	78.50	99.18	441.19	25.61	4.48
C1528-162-8000-M*	1.528	38.81	0.162	4.12	8.000	203.20	3.851	97.81	3.274	83.17	99.18	441.19	23.90	4.18
C1528-162-8500-M*	1.528	38.81	0.162	4.12	8.500	215.90	4.075	103.49	3.458	87.84	99.18	441.19	22.41	3.92
C1528-162-9000-M*	1.528	38.81	0.162	4.12	9.000	228.60	4.298	109.18	3.642	92.51	99.18	441.19	21.10	3.69
C1528-162-9500-M*	1.528	38.81	0.162	4.12	9.500	241.30	4.522	114.87	3.826	97.19	99.18	441.19	19.93	3.49
C1528-177-2125-M	1.528	38.81	0.177	4.50	2.125	53.98	1.229	31.21	1.124	28.55	126.68	563.48	141.34	24.73
C1528-177-2250-M	1.528	38.81	0.177	4.50	2.250	57.15	1.290	32.78	1.177	29.90	126.68	563.48	132.02	23.10
C1528-177-2375-M	1.528	38.81	0.177	4.50	2.375	60.33	1.352	34.35	1.230	31.25	126.68	563.48	123.85	21.67
C1528-177-2500-M	1.528	38.81	0.177	4.50	2.500	63.50	1.414	35.91	1.283	32.60	126.68	563.48	116.64	20.41
C1528-177-2625-M	1.528	38.81	0.177	4.50	2.625	66.68	1.476	37.48	1.337	33.95	126.68	563.48	110.22	19.29
C1528-177-2750-M	1.528	38.81	0.177	4.50	2.750	69.85	1.537	39.05	1.390	35.30	126.68	563.48	104.47	18.28
C1528-177-2875-M	1.528	38.81	0.177	4.50	2.875	73.03	1.599	40.62	1.443	36.65	126.68	563.48	99.29	17.38
C1528-177-3000-M	1.528	38.81	0.177	4.50	3.000	76.20	1.661	42.19	1.496	37.99	126.68	563.48	94.60	16.55
C1528-177-3250-M	1.528	38.81	0.177	4.50	3.250	82.55	1.784	45.32	1.602	40.69	126.68	563.48	86.43	15.13
C1528-177-3500-M	1.528	38.81	0.177	4.50	3.500	88.90	1.908	48.46	1.708	43.39	126.68	563.48	79.56	13.92
C1528-177-3750-M	1.528	38.81	0.177	4.50	3.750	95.25	2.031	51.60	1.814	46.09	126.68	563.48	73.71	12.90
C1528-177-4000-M	1.528	38.81	0.177	4.50	4.000	101.60	2.155	54.73	1.921	48.78	126.68	563.48	68.65	12.01
C1528-177-4250-M	1.528	38.81	0.177	4.50	4.250	107.95	2.278	57.87	2.027	51.48	126.68	563.48	64.25	11.24
C1528-177-4500-M	1.528	38.81	0.177	4.50	4.500	114.30	2.402	61.01	2.133	54.18	126.68	563.48	60.37	10.57
C1528-177-4750-M	1.528	38.81	0.177	4.50	4.750	120.65	2.525	64.14	2.239	56.88	126.68	563.48	56.94	9.96
C1528-177-5000-M	1.528	38.81	0.177	4.50	5.000	127.00	2.649	67.28	2.346	59.58	126.68	563.48	53.88	9.43
C1528-177-5250-M	1.528	38.81	0.177	4.50	5.250	133.35	2.772	70.41	2.452	62.27	126.68	563.48	51.13	8.95
C1528-177-5500-M	1.528	38.81	0.177	4.50	5.500	139.70	2.896	73.55	2.558	64.97	126.68	563.48	48.64	8.51
C1528-177-5750-M	1.528	38.81	0.177	4.50	5.750	146.05	3.019	76.69	2.664	67.67	126.68	563.48	46.39	8.12
C1528-177-6000-M	1.528	38.81	0.177	4.50	6.000	152.40	3.143	79.82	2.770	70.37	126.68	563.48	44.33	7.76
C1528-177-6250-M	1.528	38.81	0.177	4.50	6.250	158.75	3.266	82.96	2.877	73.06	126.68	563.48	42.45	7.43
C1528-177-6500-M	1.528	38.81	0.177	4.50	6.500	165.10	3.390	86.10	2.983	75.76	126.68	563.48	40.73	7.13
C1528-177-6750-M	1.528	38.81	0.177	4.50	6.750	171.45	3.513	89.23	3.089	78.46	126.68	563.48	39.14	6.85
C1528-177-7000-M	1.528	38.81	0.177	4.50	7.000	177.80	3.637	92.37	3.195	81.16	126.68	563.48	37.66	6.59
C1528-177-7500-M	1.528	38.81	0.177	4.50	7.500	190.50	3.884	98.64	3.408	86.55	126.68	563.48	35.03	6.13
C1528-177-8000-M	1.528	38.81	0.177	4.50	8.000	203.20	4.130	104.91	3.620	91.95	126.68	563.48	32.74	5.73
C1528-177-8500-M	1.528	38.81	0.177	4.50	8.500	215.90	4.377	111.19	3.832	97.34	126.68	563.48	30.73	5.38
C1528-177-9000-M	1.528	38.81	0.177	4.50	9.000	228.60	4.624	117.46	4.045	102.74	126.68	563.48	28.95	5.07
C1528-177-9500-M	1.528	38.81	0.177	4.50	9.500	241.30	4.871	123.73	4.257	108.14	126.68	563.48	27.37	4.79
C1528-192-2125-M	1.528	38.81	0.192	4.88	2.125	53.98	1.322	33.59	1.240	31.49	158.49	705.00	197.44	34.55
C1528-192-2250-M	1.528	38.81	0.192	4.88	2.250	57.15	1.390	35.30	1.300	33.01	158.49	705.00	184.22	32.24
C1528-192-2375-M	1.528	38.81	0.192	4.88	2.375	60.33	1.457	37.01	1.360	34.54	158.49	705.00	172.65	30.21
C1528-192-2500-M	1.528	38.81	0.192	4.88	2.500	63.50	1.524	38.72	1.420	36.06	158.49	705.00	162.45	28.43
C1528-192-2625-M	1.528	38.81	0.192	4.88	2.625	66.68	1.592	40.43	1.480	37.59	158.49	705.00	153.39	26.84
C1528-192-2750-M	1.528	38.81	0.192	4.88	2.750	69.85	1.659	42.14	1.540	39.11	158.49	705.00	145.29	25.43
C1528-192-2875-M	1.528	38.81	0.192	4.88	2.875	73.03	1.726	43.85	1.600	40.64	158.49	705.00	138.00	24.15
C1528-192-3000-M	1.528	38.81	0.192	4.88	3.000	76.20	1.794	45.56	1.660	42.17	158.49	705.00	131.40	23.00
C1528-192-3250-M	1.528	38.81	0.192	4.88	3.250	82.55	1.929	48.99	1.780	45.22	158.49	705.00	119.94	20.99
C1528-192-3500-M	1.528	38.81	0.192	4.88	3.500	88.90	2.063	52.41	1.900	48.27	158.49	705.00	110.32	19.31
C1528-192-3750-M	1.528	38.81	0.192	4.88	3.750	95.25	2.198	55.83	2.020	51.32	158.49	705.00	102.12	17.87
C1528-192-4000-M	1.528	38.81	0.192	4.88	4.000	101.60	2.333	59.25	2.140	54.37	158.49	705.00	95.06	16.64
C1528-192-4250-M	1.528	38.81	0.192	4.88	4.250	107.95	2.468	62.67	2.261	57.42	158.49	705.00	88.92	15.56

STAINLESS STEEL						
Catalog #	Load Length (L_1)		Load (P) at L_1		Spring Rate (R)	
	in	mm	lb	N	lb/in	N/mm
C1528-162-3000-S	1.738	44.15	73.64	327.57	58.37	10.21
C1528-162-3250-S	1.870	47.51	73.64	327.57	53.38	9.34
C1528-162-3500-S	2.003	50.86	73.64	327.57	49.18	8.61
C1528-162-3750-S	2.135	54.22	73.64	327.57	45.59	7.98
C1528-162-4000-S	2.267	57.58	73.64	327.57	42.49	7.44
C1528-162-4250-S	2.399	60.93	73.64	327.57	39.78	6.96
C1528-162-4500-S	2.531	64.29	73.64	327.57	37.40	6.55
C1528-162-4750-S	2.663	67.64	73.64	327.57	35.29	6.18
C1528-162-5000-S	2.795	71.00	73.64	327.57	33.40	5.85
C1528-162-5250-S	2.927	74.36	73.64	327.57	31.71	5.55
C1528-162-5500-S	3.060	77.71	73.64	327.57	30.18	5.28
C1528-162-5750-S	3.192	81.07	73.64	327.57	28.79	5.04
C1528-162-6000-S	3.324	84.42	73.64	327.57	27.52	4.82
C1528-162-6250-S	3.456	87.78	73.64	327.57	26.36	4.61
C1528-162-6500-S	3.588	91.14	73.64	327.57	25.29	4.43
C1528-162-6750-S	3.720	94.49	73.64	327.57	24.31	4.25
C1528-162-7000-S	3.852	97.85	73.64	327.57	23.40	4.09
C1528-162-7500-S*	4.193	106.50	73.64	327.57	22.27	3.90
C1528-162-8000-S*	4.457	113.21	73.64	327.57	20.79	3.64
C1528-162-8500-S*	4.721	119.92	73.64	327.57	19.49	3.41
C1528-162-9000-S*	4.986	126.64	73.64	327.57	18.34	3.21
C1528-162-9500-S*	5.250	133.35	73.64	327.57	17.33	3.03
C1528-177-2125-S	1.369	34.76	92.97	413.57	122.90	21.51
C1528-177-2250-S	1.440	36.58	92.97	413.57	114.80	20.09
C1528-177-2375-S	1.512	38.40	92.97	413.57	107.70	18.85
C1528-177-2500-S	1.583	40.22	92.97	413.57	101.43	17.75
C1528-177-2625-S	1.655	42.04	92.97	413.57	95.84	16.77
C1528-177-2750-S	1.727	43.85	92.97	413.57	90.84	15.90
C1528-177-2875-S	1.798	45.67	92.97	413.57	86.34	15.11
C1528-177-3000-S	1.870	47.49	92.97	413.57	82.26	14.40
C1528-177-3250-S	2.013	51.13	92.97	413.57	75.16	13.15
C1528-177-3500-S	2.156	54.77	92.97	413.57	69.19	12.11
C1528-177-3750-S	2.299	58.40	92.97	413.57	64.09	11.22
C1528-177-4000-S	2.443	62.04	92.97	413.57	59.70	10.45
C1528-177-4250-S	2.586	65.68	92.97	413.57	55.87	9.78
C1528-177-4500-S	2.729	69.32	92.97	413.57	52.50	9.19
C1528-177-4750-S	2.872	72.95	92.97	413.57	49.51	8.66
C1528-177-5000-S	3.015	76.59	92.97	413.57	46.85	8.20
C1528-177-5250-S	3.159	80.23	92.97	413.57	44.46	7.78
C1528-177-5500-S	3.302	83.87	92.97	413.57	42.30	7.40
C1528-177-5750-S	3.445	87.51	92.97	413.57	40.34	7.06
C1528-177-6000-S	3.588	91.14	92.97	413.57	38.55	6.75
C1528-177-6250-S	3.732	94.78	92.97	413.57	36.92	6.46
C1528-177-6500-S	3.875	98.42	92.97	413.57	35.42	6.20
C1528-177-6750-S	4.018	102.06	92.97	413.57	34.03	5.96
C1528-177-7000-S	4.161	105.69	92.97	413.57	32.75	5.73
C1528-177-7500-S	4.448	112.97	92.97	413.57	30.46	5.33
C1528-177-8000-S	4.734	120.24	92.97	413.57	28.47	4.98
C1528-177-8500-S	5.020	127.52	92.97	413.57	26.72	4.68
C1528-177-9000-S	5.307	134.79	92.97	413.57	25.17	4.41
C1528-177-9500-S	5.593	142.07	92.97	413.57	23.80	4.16
C1528-192-2125-S	1.455	36.96	114.99	511.52	171.69	30.05
C1528-192-2250-S	1.532	38.92	114.99	511.52	160.19	28.03
C1528-192-2375-S	1.609	40.87	114.99	511.52	150.13	26.27
C1528-192-2500-S	1.686	42.82	114.99	511.52	141.26	24.72
C1528-192-2625-S	1.763	44.78	114.99	511.52	133.38	23.34
C1528-192-2750-S	1.840	46.73	114.99	511.52	126.34	22.11
C1528-192-2875-S	1.917	48.68	114.99	511.52	120.00	21.00
C1528-192-3000-S	1.994	50.64	114.99	511.52	114.26	20.00
C1528-192-3250-S	2.147	54.54	114.99	511.52	104.30	18.25
C1528-192-3500-S	2.301	58.45	114.99	511.52	95.93	16.79
C1528-192-3750-S	2.455	62.36	114.99	511.52	88.80	15.54
C1528-192-4000-S	2.609	66.27	114.99	511.52	82.66	14.47
C1528-192-4250-S	2.763	70.17	114.99	511.52	77.32	13.53

FOR INFORMATION ON ALTERNATIVE FINISHES, SEE PAGE 311

SPEC

Part Numbers with an "*" are squared and not ground. **Part Numbers in bold** represent the newly expanded Associated Spring RAYMOND compression spring offering.

MUSIC WIRE															STAINLESS STEEL						
Catalog #	Outside Diameter (OD)		Wire Diameter (d)		Free Length (L) Approx		Load Length (L_1)		Solid Height (Sh) Approx		Load (P) at L_1		Spring Rate (R)		Catalog #	Load Length (L_1)		Load (P) at L_1		Spring Rate (R)	
	in	mm	in	mm	in	mm	in	mm	in	mm	lb	N	lb/in	N/mm		in	mm	lb	N	lb/in	N/mm
C1528-192-4500-M	1.528	38.81	0.192	4.88	4.500	114.30	2.602	66.10	2.381	60.47	158.49	705.00	83.52	14.62	C1528-192-4500-S	2.917	74.08	114.99	511.52	72.62	12.71
C1528-192-4750-M	1.528	38.81	0.192	4.88	4.750	120.65	2.737	69.52	2.501	63.52	158.49	705.00	78.73	13.78	C1528-192-4750-S	3.070	77.99	114.99	511.52	68.46	11.98
C1528-192-5000-M	1.528	38.81	0.192	4.88	5.000	127.00	2.872	72.94	2.621	66.57	158.49	705.00	74.47	13.03	C1528-192-5000-S	3.224	81.89	114.99	511.52	64.76	11.33
C1528-192-5250-M	1.528	38.81	0.192	4.88	5.250	133.35	3.006	76.36	2.741	69.62	158.49	705.00	70.64	12.36	C1528-192-5250-S	3.378	85.80	114.99	511.52	61.43	10.75
C1528-192-5500-M	1.528	38.81	0.192	4.88	5.500	139.70	3.141	79.79	2.861	72.67	158.49	705.00	67.19	11.76	C1528-192-5500-S	3.532	89.71	114.99	511.52	58.43	10.22
C1528-192-5750-M	1.528	38.81	0.192	4.88	5.750	146.05	3.276	83.21	2.981	75.72	158.49	705.00	64.06	11.21	C1528-192-5750-S	3.686	93.62	114.99	511.52	55.71	9.75
C1528-192-6000-M	1.528	38.81	0.192	4.88	6.000	152.40	3.411	86.63	3.101	78.78	158.49	705.00	61.21	10.71	C1528-192-6000-S	3.839	97.52	114.99	511.52	53.23	9.31
C1528-192-6250-M	1.528	38.81	0.192	4.88	6.250	158.75	3.545	90.05	3.221	81.83	158.49	705.00	58.60	10.26	C1528-192-6250-S	3.993	101.43	114.99	511.52	50.96	8.92
C1528-192-6500-M	1.528	38.81	0.192	4.88	6.500	165.10	3.680	93.47	3.342	84.88	158.49	705.00	56.21	9.84	C1528-192-6500-S	4.147	105.34	114.99	511.52	48.87	8.55
C1528-192-6750-M	1.528	38.81	0.192	4.88	6.750	171.45	3.815	96.90	3.462	87.93	158.49	705.00	54.00	9.45	C1528-192-6750-S	4.301	109.24	114.99	511.52	46.95	8.22
C1528-192-7000-M	1.528	38.81	0.192	4.88	7.000	177.80	3.950	100.32	3.582	90.98	158.49	705.00	51.96	9.09	C1528-192-7000-S	4.455	113.15	114.99	511.52	45.18	7.91
C1528-192-7500-M	1.528	38.81	0.192	4.88	7.500	190.50	4.219	107.16	3.822	97.08	158.49	705.00	48.31	8.45	C1528-192-7500-S	4.762	120.97	114.99	511.52	42.01	7.35
C1528-192-8000-M	1.528	38.81	0.192	4.88	8.000	203.20	4.489	114.01	4.062	103.18	158.49	705.00	45.14	7.90	C1528-192-8000-S	5.070	128.78	114.99	511.52	39.25	6.87
C1528-192-8500-M	1.528	38.81	0.192	4.88	8.500	215.90	4.758	120.85	4.302	109.28	158.49	705.00	42.35	7.41	C1528-192-8500-S	5.378	136.59	114.99	511.52	36.83	6.45
C1528-192-9000-M	1.528	38.81	0.192	4.88	9.000	228.60	5.027	127.70	4.543	115.38	158.49	705.00	39.90	6.98	C1528-192-9000-S	5.685	144.41	114.99	511.52	34.69	6.07
C1528-192-9500-M	1.528	38.81	0.192	4.88	9.500	241.30	5.297	134.54	4.783	121.49	158.49	705.00	37.71	6.60	C1528-192-9500-S	5.993	152.22	114.99	511.52	32.79	5.74
C1528-207-2125-M	1.528	38.81	0.207	5.26	2.125	53.98	1.410	35.81	1.348	34.24	194.85	866.74	272.49	47.69	C1528-207-2125-S	1.535	38.99	139.77	621.72	236.95	41.47
C1528-207-2250-M	1.528	38.81	0.207	5.26	2.250	57.15	1.483	37.66	1.415	35.93	194.85	866.74	253.94	44.44	C1528-207-2250-S	1.617	41.07	139.77	621.72	220.82	38.64
C1528-207-2375-M	1.528	38.81	0.207	5.26	2.375	60.33	1.555	39.51	1.481	37.63	194.85	866.74	237.76	41.61	C1528-207-2375-S	1.699	43.15	139.77	621.72	206.74	36.18
C1528-207-2500-M	1.528	38.81	0.207	5.26	2.500	63.50	1.628	41.36	1.548	39.32	194.85	866.74	223.51	39.11	C1528-207-2500-S	1.781	45.23	139.77	621.72	194.36	34.01
C1528-207-2625-M	1.528	38.81	0.207	5.26	2.625	66.68	1.701	43.20	1.615	41.02	194.85	866.74	210.87	36.90	C1528-207-2625-S	1.863	47.31	139.77	621.72	183.37	32.09
C1528-207-2750-M	1.528	38.81	0.207	5.26	2.750	69.85	1.774	45.05	1.682	42.71	194.85	866.74	199.59	34.93	C1528-207-2750-S	1.945	49.39	139.77	621.72	173.56	30.37
C1528-207-2875-M	1.528	38.81	0.207	5.26	2.875	73.03	1.846	46.90	1.748	44.41	194.85	866.74	189.45	33.15	C1528-207-2875-S	2.027	51.48	139.77	621.72	164.74	28.83
C1528-207-3000-M	1.528	38.81	0.207	5.26	3.000	76.20	1.919	48.75	1.815	46.10	194.85	866.74	180.29	31.55	C1528-207-3000-S	2.108	53.56	139.77	621.72	156.78	27.44
C1528-207-3250-M	1.528	38.81	0.207	5.26	3.250	82.55	2.065	52.45	1.948	49.49	194.85	866.74	164.40	28.77	C1528-207-3250-S	2.272	57.72	139.77	621.72	142.96	25.02
C1528-207-3500-M	1.528	38.81	0.207	5.26	3.500	88.90	2.210	56.14	2.082	52.88	194.85	866.74	151.08	26.44	C1528-207-3500-S	2.436	61.88	139.77	621.72	131.38	22.99
C1528-207-3750-M	1.528	38.81	0.207	5.26	3.750	95.25	2.356	59.84	2.215	56.27	194.85	866.74	139.76	24.46	C1528-207-3750-S	2.600	66.04	139.77	621.72	121.53	21.27
C1528-207-4000-M	1.528	38.81	0.207	5.26	4.000	101.60	2.501	63.53	2.349	59.66	194.85	866.74	130.02	22.75	C1528-207-4000-S	2.764	70.20	139.77	621.72	113.06	19.78
C1528-207-4250-M	1.528	38.81	0.207	5.26	4.250	107.95	2.647	67.23	2.482	63.05	194.85	866.74	121.54	21.27	C1528-207-4250-S	2.928	74.36	139.77	621.72	105.69	18.50
C1528-207-4500-M	1.528	38.81	0.207	5.26	4.500	114.30	2.792	70.93	2.616	66.44	194.85	866.74	114.11	19.97	C1528-207-4500-S	3.091	78.52	139.77	621.72	99.22	17.36
C1528-207-4750-M	1.528	38.81	0.207	5.26	4.750	120.65	2.938	74.62	2.749	69.83	194.85	866.74	107.53	18.82	C1528-207-4750-S	3.255	82.68	139.77	621.72	93.50	16.36
C1528-207-5000-M	1.528	38.81	0.207	5.26	5.000	127.00	3.083	78.32	2.882	73.21	194.85	866.74	101.67	17.79	C1528-207-5000-S	3.419	86.84	139.77	621.72	88.41	15.47
C1528-207-5250-M	1.528	38.81	0.207	5.26	5.250	133.35	3.229	82.01	3.016	76.60	194.85	866.74	96.41	16.87	C1528-207-5250-S	3.583	91.00	139.77	621.72	83.84	14.67
C1528-207-5500-M	1.528	38.81	0.207	5.26	5.500	139.70	3.374	85.71	3.149	79.99	194.85	866.74	91.67	16.04	C1528-207-5500-S	3.747	95.16	139.77	621.72	79.71	13.95
C1528-207-5750-M	1.528	38.81	0.207	5.26	5.750	146.05	3.520	89.41	3.283	83.38	194.85	866.74	87.38	15.29	C1528-207-5750-S	3.910	99.32	139.77	621.72	75.98	13.30
C1528-207-6000-M	1.528	38.81	0.207	5.26	6.000	152.40	3.665	93.10	3.416	86.77	194.85	866.74	83.47	14.61	C1528-207-6000-S	4.074	103.49	139.77	621.72	72.58	12.70
C1528-207-6250-M	1.528	38.81	0.207	5.26	6.250	158.75	3.811	96.80	3.550	90.16	194.85	866.74	79.89	13.98	C1528-207-6250-S	4.238	107.65	139.77	621.72	69.47	12.16
C1528-207-6500-M	1.528	38.81	0.207	5.26	6.500	165.10	3.957	100.50	3.683	93.55	194.85	866.74	76.61	13.41	C1528-207-6500-S	4.402	111.81	139.77	621.72	66.62	11.66
C1528-207-6750-M	1.528	38.81	0.207	5.26	6.750	171.45	4.102	104.19	3.817	96.94	194.85	866.74	73.59	12.88	C1528-207-6750-S	4.566	115.97	139.77	621.72	63.99	11.20
C1528-207-7000-M	1.528	38.81	0.207	5.26	7.000	177.80	4.248	107.89	3.950	100.33	194.85	866.74	70.79	12.39	C1528-207-7000-S	4.729	120.13	139.77	621.72	61.56	10.77
C1528-207-7500-M	1.528	38.81	0.207	5.26	7.500	190.50	4.539	115.28	4.217	107.11	194.85	866.74	65.80	11.51	C1528-207-7500-S	5.057	128.45	139.77	621.72	57.22	10.01
C1528-207-8000-M	1.528	38.81	0.207	5.26	8.000	203.20	4.830	122.67	4.484	113.89	194.85	866.74	61.46	10.76	C1528-207-8000-S	5.385	136.77	139.77	621.72	53.44	9.35
C1528-207-8500-M	1.528	38.81	0.207	5.26	8.500	215.90	5.121	130.07	4.751	120.66	194.85	866.74	57.66	10.09	C1528-207-8500-S	5.712	145.09	139.77	621.72	50.14	8.77
C1528-207-9000-M	1.528	38.81	0.207	5.26	9.000	228.60	5.412	137.46	5.017	127.44	194.85	866.74	54.30	9.50	C1528-207-9000-S	6.040	153.42	139.77	621.72	47.22	8.26
C1528-207-9500-M	1.528	38.81	0.207	5.26	9.500	241.30	5.703	144.85	5.284	134.22	194.85	866.74	51.31	8.98	C1528-207-9500-S	6.368	161.74	139.77	621.72	44.62	7.81
C1528-225-2125-M	1.528	38.81	0.225	5.72	2.125	53.98	1.506	38.26	1.467	37.26	244.76	1088.73	395.61	69.23	C1528-225-2125-S	1.622	41.19	173.20	770.45	344.01	60.20
C1528-225-2250-M	1.528	38.81	0.225	5.72	2.250	57.15	1.585	40.26	1.541	39.15	244.76	1088.73	368.14	64.42	C1528-225-2250-S	1.709	43.41	173.20	770.45	320.12	56.02
C1528-225-2375-M	1.528	38.81	0.225	5.72	2.375	60.33	1.664	42.27	1.615	41.03	244.76	1088.73	344.23	60.24	C1528-225-2375-S	1.796	45.63	173.20	770.45	299.33	52.38
C1528-225-2500-M	1.528	38.81	0.225	5.72	2.500	63.50	1.743	44.27	1.690	42.92	244.76	1088.73	323.24	56.57	C1528-225-2500-S	1.884	47.85	173.20	770.45	281.08	49.19
C1528-225-2625-M	1.528	38.81	0.225	5.72	2.625	66.68	1.822	46.27	1.764	44.80	244.76	1088.73	304.67	53.32	C1528-225-2625-S	1.971	50.07	173.20	770.45	264.93	46.36
C1528-225-2750-M	1.528	38.81	0.225	5.72	2.750	69.85	1.900	48.27	1.838	46.69	244.76	1088.73	288.11	50.42	C1528-225-2750-S	2.059	52.29	173.20	770.45	250.53	43.84
C1528-225-2875-M	1.528	38.81	0.225	5.72	2.875	73.03	1.979	50.27	1.912	48.57	244.76	1088.73	273.26	47.82	C1528-225-2875-S	2.146	54.51	173.20	770.45	237.62	41.58
C1528-225-3000-M	1.528	38.81	0.225	5.72	3.000	76.20	2.058	52.28	1.987	50.46	244.76	1088.73	259.86	45.48	C1528-225-3000-S	2.234	56.73	173.20	770.45	225.97	39.54
C1528-225-3250-M	1.528	38.81	0.225	5.72	3.250	82.55	2.216	56.28	2.135	54.23	244.76	1088.73	236.66	41.42	C1528-225-3250-S	2.408	61.17	173.20	770.45	205.79	36.01
C1528-225-3500-M	1.528	38.81	0.225	5.72	3.500	88.90	2.373	60.29	2.283	58.00	244.76	1088.73	217.26	38.02	C1528-225-3500-S	2.583	65.61	173.20	770.45	188.92	33.06
C1528-225-3750-M	1.528	38.81	0.225	5.72	3.750	95.25	2.531	64.29	2.432	61.77	244.76	1088.73	200.80	35.14	C1528-225-3750-S	2.758	70.05	173.20	770.45	174.61	30.56
C1528-225-4000-M	1.528	38.81	0.225	5.72	4.000	101.60	2.689	68.29	2.580	65.54	244.76	1088.73	186.66	32.67	C1528-225-4000-S	2.933	74.50	173.20	770.45	162.32	28.41
C1528-225-4250-M	1.528	38.81	0.225	5.72	4.250	107.95	2.846	72.30	2.729	69.31	244.76	1088.73	174.38	30.52	C1528-225-4250-S	3.108	78.94	173.20	770.45	151.64	26.54
C1528-225-4500-M	1.528	38.81	0.225	5.72	4.500	114.30	3.004	76.30	2.877	73.08	244.76	1088.73	163.62	28.63	C1528-225-4500-S	3.283	83.38	173.20	770.45	142.28	24.90
C1528-225-4750-M	1.528	38.81	0.225	5.72	4.750	120.65	3.162	80.31	3.026	76.85	244.76	1088.73	154.11	26.97	C1528-225-4750-S	3.457	87.82	173.20	770.45	134.00	23.45
C1528-225-5000-M	1.528	38.81	0.225	5.72	5.000	127.00	3.319	84.31	3.174	80.62	244.76	1088.73	145.64	25.49	C1528-225-5000-S	3.632	92.26	173.20	770.45	126.64	22.16
C1528-225-5250-M	1.528	38.81	0.225	5.72	5.250	133.35	3.477	88.32	3.322	84.39	244.76	1088.73	138.05	24.16	C1528-225-5250-S	3.807	96.70	173.20	770.45	120.05	21.01
C1528-225-5500-M	1.528	38.81	0.225	5.72	5.500	139.70	3.635	92.32	3.471	88.16	244.76	1088.73	131.22	22.96	C1528-225-5500-S	3.982	101.14	173.20	770.45	114.10	19.97
C1528-225-5750-M	1.528	38.81	0.225	5.72	5.750	146.05	3.792	96.33	3.619	91.93	244.76	1088.73	125.03	21.88	C1528-225-5750-S	4.157	105.59	173.20	770.45	108.72	19.03

Part Numbers with an "*" are squared and not ground. **Part Numbers in bold** represent the newly expanded Associated Spring RAYMOND compression spring offering.

MUSIC WIRE															STAINLESS STEEL					
Catalog #	Outside Diameter (OD)		Wire Diameter (d)		Free Length (L) Approx		Load Length (L_1)		Solid Height (Sh) Approx		Load (P) at L_1		Spring Rate (R)		Catalog #	Load Length (L_1)		Load (P) at L_1		Spring Rate (R)	
	in	mm	in	mm	in	mm	in	mm	in	mm	lb	N	lb/in	N/mm		in	mm	lb	N	lb/in	N/mm
C1528-225-6000-M	1.528	38.81	0.225	5.72	6.000	152.40	3.950	100.33	3.768	95.70	244.76	1088.73	119.40	20.89	**C1528-225-6000-S**	4.332	110.03	173.20	770.45	103.82	18.17
C1528-225-6250-M	1.528	38.81	0.225	5.72	6.250	158.75	4.108	104.34	3.916	99.47	244.76	1088.73	114.25	19.99	**C1528-225-6250-S**	4.507	114.47	173.20	770.45	99.35	17.39
C1528-225-6500-M	1.528	38.81	0.225	5.72	6.500	165.10	4.265	108.34	4.065	103.24	244.76	1088.73	109.53	19.17	**C1528-225-6500-S**	4.681	118.91	173.20	770.45	95.24	16.67
C1528-225-6750-M	1.528	38.81	0.225	5.72	6.750	171.45	4.423	112.35	4.213	107.01	244.76	1088.73	105.18	18.41	**C1528-225-6750-S**	4.856	123.35	173.20	770.45	91.46	16.01
C1528-225-7000-M	1.528	38.81	0.225	5.72	7.000	177.80	4.581	116.35	4.361	110.78	244.76	1088.73	101.17	17.70	**C1528-225-7000-S**	5.031	127.79	173.20	770.45	87.97	15.40
C1528-225-7500-M	1.528	38.81	0.225	5.72	7.500	190.50	4.896	124.36	4.658	118.32	244.76	1088.73	93.99	16.45	**C1528-225-7500-S**	5.381	136.67	173.20	770.45	81.73	14.30
C1528-225-8000-M	1.528	38.81	0.225	5.72	8.000	203.20	5.211	132.37	4.955	125.86	244.76	1088.73	87.77	15.36	**C1528-225-8000-S**	5.731	145.56	173.20	770.45	76.32	13.36
C1528-225-8500-M	1.528	38.81	0.225	5.72	8.500	215.90	5.527	140.38	5.252	133.40	244.76	1088.73	82.32	14.41	**C1528-225-8500-S**	6.080	154.44	173.20	770.45	71.58	12.53
C1528-225-9000-M	1.528	38.81	0.225	5.72	9.000	228.60	5.842	148.39	5.549	140.94	244.76	1088.73	77.50	13.56	**C1528-225-9000-S**	6.430	163.32	173.20	770.45	67.39	11.79
C1528-225-9500-M	1.528	38.81	0.225	5.72	9.500	241.30	6.157	156.40	5.846	148.48	244.76	1088.73	73.22	12.81	**C1528-225-9500-S**	6.780	172.20	173.20	770.45	63.67	11.14
C1528-250-2125-M	1.528	38.81	0.250	6.35	2.125	53.98	1.623	41.24	1.612	40.94	325.95	1449.88	649.85	113.72	**C1528-250-2125-S**	1.724	43.80	226.43	1007.22	565.08	98.89
C1528-250-2250-M	1.528	38.81	0.250	6.35	2.250	57.15	1.710	43.43	1.695	43.06	325.95	1449.88	603.43	105.60	**C1528-250-2250-S**	1.818	46.19	226.43	1007.22	524.72	91.83
C1528-250-2375-M	1.528	38.81	0.250	6.35	2.375	60.33	1.796	45.63	1.779	45.18	325.95	1449.88	563.20	98.56	**C1528-250-2375-S**	1.913	48.58	226.43	1007.22	489.74	85.70
C1528-250-2500-M	1.528	38.81	0.250	6.35	2.500	63.50	1.883	47.82	1.862	47.31	325.95	1449.88	528.00	92.40	**C1528-250-2500-S**	2.007	50.97	226.43	1007.22	459.13	80.35
C1528-250-2625-M	1.528	38.81	0.250	6.35	2.625	66.68	1.969	50.02	1.946	49.43	325.95	1449.88	496.94	86.96	**C1528-250-2625-S**	2.101	53.37	226.43	1007.22	432.12	75.62
C1528-250-2750-M	1.528	38.81	0.250	6.35	2.750	69.85	2.056	52.21	2.030	51.55	325.95	1449.88	469.33	82.13	**C1528-250-2750-S**	2.195	55.76	226.43	1007.22	408.12	71.42
C1528-250-2875-M	1.528	38.81	0.250	6.35	2.875	73.03	2.142	54.41	2.113	53.68	325.95	1449.88	444.63	77.81	**C1528-250-2875-S**	2.289	58.15	226.43	1007.22	386.64	67.66
C1528-250-3000-M	1.528	38.81	0.250	6.35	3.000	76.20	2.228	56.60	2.197	55.80	325.95	1449.88	422.40	73.92	**C1528-250-3000-S**	2.384	60.54	226.43	1007.22	367.31	64.28
C1528-250-3250-M	1.528	38.81	0.250	6.35	3.250	82.55	2.401	60.99	2.364	60.04	325.95	1449.88	384.00	67.20	**C1528-250-3250-S**	2.572	65.33	226.43	1007.22	333.91	58.43
C1528-250-3500-M	1.528	38.81	0.250	6.35	3.500	88.90	2.574	65.38	2.531	64.29	325.95	1449.88	352.00	61.60	**C1528-250-3500-S**	2.760	70.11	226.43	1007.22	306.09	53.57
C1528-250-3750-M	1.528	38.81	0.250	6.35	3.750	95.25	2.747	69.77	2.698	68.54	325.95	1449.88	324.92	56.86	**C1528-250-3750-S**	2.949	74.89	226.43	1007.22	282.54	49.44
C1528-250-4000-M	1.528	38.81	0.250	6.35	4.000	101.60	2.920	74.16	2.865	72.78	325.95	1449.88	301.72	52.80	**C1528-250-4000-S**	3.137	79.68	226.43	1007.22	262.36	45.91
C1528-250-4250-M	1.528	38.81	0.250	6.35	4.250	107.95	3.093	78.55	3.033	77.03	325.95	1449.88	281.60	49.28	**C1528-250-4250-S**	3.325	84.46	226.43	1007.22	244.87	42.85
C1528-250-4500-M	1.528	38.81	0.250	6.35	4.500	114.30	3.265	82.94	3.200	81.28	325.95	1449.88	264.00	46.20	**C1528-250-4500-S**	3.514	89.25	226.43	1007.22	229.57	40.17
C1528-250-4750-M	1.528	38.81	0.250	6.35	4.750	120.65	3.438	87.33	3.367	85.52	325.95	1449.88	248.47	43.48	**C1528-250-4750-S**	3.702	94.03	226.43	1007.22	216.06	37.81
C1528-250-5000-M	1.528	38.81	0.250	6.35	5.000	127.00	3.611	91.72	3.534	89.77	325.95	1449.88	234.67	41.07	**C1528-250-5000-S**	3.890	98.82	226.43	1007.22	204.06	35.71
C1528-250-5250-M	1.528	38.81	0.250	6.35	5.250	133.35	3.784	96.11	3.701	94.02	325.95	1449.88	222.32	38.91	**C1528-250-5250-S**	4.079	103.60	226.43	1007.22	193.32	33.83
C1528-250-5500-M	1.528	38.81	0.250	6.35	5.500	139.70	3.957	100.50	3.869	98.26	325.95	1449.88	211.20	36.96	**C1528-250-5500-S**	4.267	108.38	226.43	1007.22	183.65	32.14
C1528-250-5750-M	1.528	38.81	0.250	6.35	5.750	146.05	4.130	104.89	4.036	102.51	325.95	1449.88	201.14	35.20	**C1528-250-5750-S**	4.455	113.17	226.43	1007.22	174.91	30.61
C1528-250-6000-M	1.528	38.81	0.250	6.35	6.000	152.40	4.302	109.28	4.203	106.75	325.95	1449.88	192.00	33.60	**C1528-250-6000-S**	4.644	117.95	226.43	1007.22	166.96	29.22
C1528-250-6250-M	1.528	38.81	0.250	6.35	6.250	158.75	4.475	113.67	4.370	111.00	325.95	1449.88	183.65	32.14	**C1528-250-6250-S**	4.832	122.74	226.43	1007.22	159.70	27.95
C1528-250-6500-M	1.528	38.81	0.250	6.35	6.500	165.10	4.648	118.06	4.537	115.25	325.95	1449.88	176.00	30.80	**C1528-250-6500-S**	5.020	127.52	226.43	1007.22	153.04	26.78
C1528-250-6750-M	1.528	38.81	0.250	6.35	6.750	171.45	4.821	122.45	4.704	119.49	325.95	1449.88	168.96	29.57	**C1528-250-6750-S**	5.209	132.30	226.43	1007.22	146.92	25.71
C1528-250-7000-M	1.528	38.81	0.250	6.35	7.000	177.80	4.994	126.84	4.872	123.74	325.95	1449.88	162.46	28.43	**C1528-250-7000-S**	5.397	137.09	226.43	1007.22	141.27	24.72
C1528-250-7500-M	1.528	38.81	0.250	6.35	7.500	190.50	5.339	135.62	5.206	132.23	325.95	1449.88	150.86	26.40	**C1528-250-7500-S**	5.774	146.66	226.43	1007.22	131.18	22.96
C1528-250-8000-M	1.528	38.81	0.250	6.35	8.000	203.20	5.685	144.40	5.540	140.72	325.95	1449.88	140.80	24.64	**C1528-250-8000-S**	6.151	156.23	226.43	1007.22	122.44	21.43
C1528-250-8500-M	1.528	38.81	0.250	6.35	8.500	215.90	6.031	153.18	5.875	149.22	325.95	1449.88	132.00	23.10	**C1528-250-8500-S**	6.527	165.79	226.43	1007.22	114.78	20.09
C1528-250-9000-M	1.528	38.81	0.250	6.35	9.000	228.60	6.376	161.96	6.209	157.71	325.95	1449.88	124.24	21.74	**C1528-250-9000-S**	6.904	175.36	226.43	1007.22	108.03	18.91
C1528-250-9500-M	1.528	38.81	0.250	6.35	9.500	241.30	6.722	170.74	6.543	166.20	325.95	1449.88	117.33	20.53	**C1528-250-9500-S**	7.281	184.93	226.43	1007.22	102.03	17.86
C1580-207-2500-M	1.580	40.13	0.207	5.26	2.500	63.50	1.581	40.16	1.490	37.85	192.93	858.21	210.00	36.75	**C1580-207-2500-S**	1.725	43.82	135.56	602.99	174.93	30.61
C1580-207-3000-M	1.580	40.13	0.207	5.26	3.000	76.20	1.857	47.18	1.738	44.16	194.26	864.11	170.00	29.75	**C1580-207-3000-S**	2.043	51.89	135.56	602.99	141.61	24.78
C1580-207-3500-M	1.580	40.13	0.207	5.26	3.500	88.90	2.140	54.37	1.996	50.69	193.06	858.78	142.00	24.85	**C1580-207-3500-S**	2.354	59.79	135.56	602.99	118.29	20.70
C1580-207-4000-M	1.580	40.13	0.207	5.26	4.000	101.60	2.435	61.84	2.266	57.57	189.40	842.50	121.00	21.18	**C1580-207-4000-S**	2.655	67.44	135.56	602.99	100.79	17.64
C1580-207-4500-M	1.580	40.13	0.207	5.26	4.500	114.30	2.704	68.67	2.506	63.65	192.20	854.96	107.00	18.73	**C1580-207-4500-S**	2.979	75.67	135.56	602.99	89.13	15.60
C1580-207-5000-M	1.580	40.13	0.207	5.26	5.000	127.00	2.991	75.96	2.768	70.30	190.90	849.17	95.00	16.63	**C1580-207-5000-S**	3.287	83.49	135.56	602.99	79.14	13.85
C1580-207-5500-M	1.580	40.13	0.207	5.26	5.500	139.70	3.263	82.88	3.012	76.50	192.37	855.70	86.00	15.05	**C1580-207-5500-S**	3.608	91.64	135.56	602.99	71.64	12.54
C1580-207-6000-M	1.580	40.13	0.207	5.26	6.000	152.40	3.523	89.48	3.240	82.30	195.68	870.43	79.00	13.83	**C1580-207-6000-S**	3.940	100.08	135.56	602.99	65.81	11.52
C1586-125-2750-M	1.586	40.28	0.125	3.18	2.750	69.85	1.059	26.90	0.799	20.28	46.59	207.26	27.55	4.82	**C1586-125-2750-S**	1.265	32.13	35.58	158.27	23.96	4.19
C1586-125-2875-M	1.586	40.28	0.125	3.18	2.875	73.03	1.099	27.92	0.825	20.96	46.59	207.26	26.24	4.59	**C1586-125-2875-S**	1.316	33.42	35.58	158.27	22.82	3.99
C1586-125-3000-M	1.586	40.28	0.125	3.18	3.000	76.20	1.140	28.95	0.852	21.65	46.59	207.26	25.05	4.38	**C1586-125-3000-S**	1.366	34.71	35.58	158.27	21.78	3.81
C1586-125-3250-M	1.586	40.28	0.125	3.18	3.250	82.55	1.221	31.01	0.906	23.01	46.59	207.26	22.96	4.02	**C1586-125-3250-S**	1.468	37.29	35.58	158.27	19.97	3.49
C1586-125-3500-M	1.586	40.28	0.125	3.18	3.500	88.90	1.302	33.06	0.959	24.37	46.59	207.26	21.20	3.71	**C1586-125-3500-S**	1.569	39.86	35.58	158.27	18.43	3.23
C1586-125-3750-M	1.586	40.28	0.125	3.18	3.750	95.25	1.383	35.12	1.013	25.73	46.59	207.26	19.68	3.44	**C1586-125-3750-S**	1.671	42.44	35.58	158.27	17.11	2.99
C1586-125-4000-M	1.586	40.28	0.125	3.18	4.000	101.60	1.463	37.17	1.067	27.09	46.59	207.26	18.37	3.21	**C1586-125-4000-S**	1.772	45.02	35.58	158.27	15.97	2.80
C1586-125-4250-M	1.586	40.28	0.125	3.18	4.250	107.95	1.544	39.23	1.120	28.45	46.59	207.26	17.22	3.01	**C1586-125-4250-S**	1.874	47.60	35.58	158.27	14.98	2.62
C1586-125-4500-M	1.586	40.28	0.125	3.18	4.500	114.30	1.625	41.28	1.174	29.81	46.59	207.26	16.21	2.84	**C1586-125-4500-S**	1.975	50.18	35.58	158.27	14.09	2.47
C1586-125-4750-M	1.586	40.28	0.125	3.18	4.750	120.65	1.706	43.34	1.227	31.18	46.59	207.26	15.31	2.68	**C1586-125-4750-S**	2.077	52.75	35.58	158.27	13.31	2.33
C1586-125-5000-M	1.586	40.28	0.125	3.18	5.000	127.00	1.787	45.39	1.281	32.54	46.59	207.26	14.50	2.54	**C1586-125-5000-S**	2.178	55.33	35.58	158.27	12.61	2.21
C1586-125-5250-M	1.586	40.28	0.125	3.18	5.250	133.35	1.868	47.45	1.335	33.90	46.59	207.26	13.78	2.41	**C1586-125-5250-S**	2.280	57.91	35.58	158.27	11.98	2.10
C1586-125-5500-M	1.586	40.28	0.125	3.18	5.500	139.70	1.949	49.50	1.388	35.26	46.59	207.26	13.12	2.30	**C1586-125-5500-S**	2.381	60.49	35.58	158.27	11.41	2.00
C1586-125-5750-M	1.586	40.28	0.125	3.18	5.750	146.05	2.030	51.55	1.442	36.62	46.59	207.26	12.52	2.19	**C1586-125-5750-S**	2.483	63.07	35.58	158.27	10.89	1.91
C1586-125-6000-M	1.586	40.28	0.125	3.18	6.000	152.40	2.111	53.61	1.495	37.98	46.59	207.26	11.98	2.10	**C1586-125-6000-S**	2.584	65.64	35.58	158.27	10.42	1.82
C1586-125-6250-M	1.586	40.28	0.125	3.18	6.250	158.75	2.192	55.66	1.549	39.35	46.59	207.26	11.48	2.01	**C1586-125-6250-S**	2.686	68.22	35.58	158.27	9.98	1.75
C1586-125-6500-M	1.586	40.28	0.125	3.18	6.500	165.10	2.272	57.72	1.603	40.71	46.59	207.26	11.02	1.93	**C1586-125-6500-S**	2.787	70.80	35.58	158.27	9.58	1.68

FOR INFORMATION ON ALTERNATIVE FINISHES, SEE PAGE 311

Part Numbers with an "*" are squared and not ground. **Part Numbers in bold** represent the newly expanded Associated Spring RAYMOND compression spring offering.

MUSIC WIRE															STAINLESS STEEL						
Catalog #	Outside Diameter (OD)		Wire Diameter (d)		Free Length (L) Approx		Load Length (L_1)		Solid Height (Sh) Approx		Load (P) at L_1		Spring Rate (R)		Catalog #	Load Length (L_1)		Load (P) at L_1		Spring Rate (R)	
	in	mm	in	mm	in	mm	in	mm	in	mm	lb	N	lb/in	N/mm		in	mm	lb	N	lb/in	N/mm
C1586-125-6750-M	1.586	40.28	0.125	3.18	6.750	171.45	2.353	59.77	1.656	42.07	46.59	207.26	10.60	1.85	C1586-125-6750-S	2.889	73.38	35.58	158.27	9.22	1.61
C1586-125-7000-M	1.586	40.28	0.125	3.18	7.000	177.80	2.434	61.83	1.710	43.43	46.59	207.26	10.21	1.79	C1586-125-7000-S	2.990	75.96	35.58	158.27	8.87	1.55
C1586-125-7500-M	1.586	40.28	0.125	3.18	7.500	190.50	2.596	65.94	1.817	46.15	46.59	207.26	9.50	1.66	C1586-125-7500-S	3.193	81.11	35.58	158.27	8.26	1.45
C1586-125-8000-M	1.586	40.28	0.125	3.18	8.000	203.20	2.758	70.05	1.924	48.88	46.59	207.26	8.89	1.56	C1586-125-8000-S	3.396	86.27	35.58	158.27	7.73	1.35
C1586-125-8500-M	1.586	40.28	0.125	3.18	8.500	215.90	2.920	74.16	2.032	51.60	46.59	207.26	8.35	1.46	C1586-125-8500-S	3.599	91.42	35.58	158.27	7.26	1.27
C1586-125-9000-M	1.586	40.28	0.125	3.18	9.000	228.60	3.081	78.27	2.139	54.32	46.59	207.26	7.87	1.38	C1586-125-9000-S	3.802	96.58	35.58	158.27	6.85	1.20
C1586-125-9500-M	1.586	40.28	0.125	3.18	9.500	241.30	3.243	82.38	2.246	57.05	46.59	207.26	7.45	1.30	C1586-125-9500-S	4.005	101.74	35.58	158.27	6.48	1.13
C1586-135-2625-M	1.586	40.28	0.135	3.43	2.625	66.68	1.098	27.88	0.870	22.09	57.73	256.78	37.80	6.61	C1586-135-2625-S	1.294	32.86	43.75	194.63	32.87	5.75
C1586-135-2750-M	1.586	40.28	0.135	3.43	2.750	69.85	1.142	29.00	0.901	22.88	57.73	256.78	35.89	6.28	C1586-135-2750-S	1.348	34.24	43.75	194.63	31.21	5.46
C1586-135-2875-M	1.586	40.28	0.135	3.43	2.875	73.03	1.186	30.11	0.932	23.67	57.73	256.78	34.17	5.98	C1586-135-2875-S	1.402	35.62	43.75	194.63	29.71	5.20
C1586-135-3000-M	1.586	40.28	0.135	3.43	3.000	76.20	1.230	31.23	0.963	24.46	57.73	256.78	32.61	5.71	C1586-135-3000-S	1.457	37.00	43.75	194.63	28.35	4.96
C1586-135-3250-M	1.586	40.28	0.135	3.43	3.250	82.55	1.317	33.46	1.025	26.04	57.73	256.78	29.87	5.23	C1586-135-3250-S	1.565	39.76	43.75	194.63	25.97	4.55
C1586-135-3500-M	1.586	40.28	0.135	3.43	3.500	88.90	1.405	35.69	1.087	27.62	57.73	256.78	27.56	4.82	C1586-135-3500-S	1.674	42.52	43.75	194.63	23.96	4.19
C1586-135-3750-M	1.586	40.28	0.135	3.43	3.750	95.25	1.493	37.93	1.150	29.20	57.73	256.78	25.58	4.48	C1586-135-3750-S	1.783	45.28	43.75	194.63	22.24	3.89
C1586-135-4000-M	1.586	40.28	0.135	3.43	4.000	101.60	1.581	40.16	1.212	30.78	57.73	256.78	23.86	4.18	C1586-135-4000-S	1.892	48.04	43.75	194.63	20.75	3.63
C1586-135-4250-M	1.586	40.28	0.135	3.43	4.250	107.95	1.669	42.39	1.274	32.36	57.73	256.78	22.37	3.91	C1586-135-4250-S	2.000	50.81	43.75	194.63	19.45	3.40
C1586-135-4500-M	1.586	40.28	0.135	3.43	4.500	114.30	1.757	44.62	1.336	33.94	57.73	256.78	21.04	3.68	C1586-135-4500-S	2.109	53.57	43.75	194.63	18.30	3.20
C1586-135-4750-M	1.586	40.28	0.135	3.43	4.750	120.65	1.845	46.85	1.399	35.52	57.73	256.78	19.87	3.48	C1586-135-4750-S	2.218	56.33	43.75	194.63	17.28	3.02
C1586-135-5000-M	1.586	40.28	0.135	3.43	5.000	127.00	1.933	49.09	1.461	37.10	57.73	256.78	18.82	3.29	C1586-135-5000-S	2.326	59.09	43.75	194.63	16.36	2.86
C1586-135-5250-M	1.586	40.28	0.135	3.43	5.250	133.35	2.020	51.32	1.523	38.68	57.73	256.78	17.87	3.13	C1586-135-5250-S	2.435	61.85	43.75	194.63	15.54	2.72
C1586-135-5500-M	1.586	40.28	0.135	3.43	5.500	139.70	2.108	53.55	1.585	40.26	57.73	256.78	17.02	2.98	C1586-135-5500-S	2.544	64.61	43.75	194.63	14.80	2.59
C1586-135-5750-M	1.586	40.28	0.135	3.43	5.750	146.05	2.196	55.78	1.647	41.84	57.73	256.78	16.24	2.84	C1586-135-5750-S	2.652	67.37	43.75	194.63	14.13	2.47
C1586-135-6000-M	1.586	40.28	0.135	3.43	6.000	152.40	2.284	58.01	1.710	43.42	57.73	256.78	15.54	2.72	C1586-135-6000-S	2.761	70.13	43.75	194.63	13.51	2.36
C1586-135-6250-M	1.586	40.28	0.135	3.43	6.250	158.75	2.372	60.25	1.772	45.00	57.73	256.78	14.89	2.60	C1586-135-6250-S	2.870	72.89	43.75	194.63	12.94	2.27
C1586-135-6500-M	1.586	40.28	0.135	3.43	6.500	165.10	2.460	62.48	1.834	46.59	57.73	256.78	14.29	2.50	C1586-135-6500-S	2.978	75.65	43.75	194.63	12.42	2.17
C1586-135-6750-M	1.586	40.28	0.135	3.43	6.750	171.45	2.548	64.71	1.896	48.17	57.73	256.78	13.74	2.40	C1586-135-6750-S	3.087	78.41	43.75	194.63	11.95	2.09
C1586-135-7000-M	1.586	40.28	0.135	3.43	7.000	177.80	2.635	66.94	1.959	49.75	57.73	256.78	13.23	2.31	C1586-135-7000-S	3.196	81.17	43.75	194.63	11.50	2.01
C1586-135-7500-M	1.586	40.28	0.135	3.43	7.500	190.50	2.811	71.40	2.083	52.91	57.73	256.78	12.31	2.15	C1586-135-7500-S	3.413	86.69	43.75	194.63	10.71	1.87
C1586-135-8000-M	1.586	40.28	0.135	3.43	8.000	203.20	2.987	75.87	2.207	56.07	57.73	256.78	11.52	2.02	C1586-135-8000-S	3.630	92.21	43.75	194.63	10.01	1.75
C1586-135-8500-M	1.586	40.28	0.135	3.43	8.500	215.90	3.163	80.33	2.332	59.23	57.73	256.78	10.82	1.89	C1586-135-8500-S	3.848	97.73	43.75	194.63	9.41	1.65
C1586-135-9000-M	1.586	40.28	0.135	3.43	9.000	228.60	3.338	84.80	2.456	62.39	57.73	256.78	10.20	1.78	C1586-135-9000-S	4.065	103.26	43.75	194.63	8.87	1.55
C1586-135-9500-M*	1.586	40.28	0.135	3.43	9.500	241.30	3.602	91.48	2.689	68.30	57.73	256.78	9.79	1.71	C1586-135-9500-S*	4.359	110.71	43.75	194.63	8.51	1.49
C1586-148-2500-M	1.586	40.28	0.148	3.76	2.500	63.50	1.154	29.30	0.962	24.43	74.53	331.54	55.36	9.69	C1586-148-2500-S	1.338	33.99	55.94	248.82	48.14	8.42
C1586-148-2625-M	1.586	40.28	0.148	3.76	2.625	66.68	1.202	30.54	0.999	25.37	74.53	331.54	52.39	9.17	C1586-148-2625-S	1.397	35.49	55.94	248.82	45.56	7.97
C1586-148-2750-M	1.586	40.28	0.148	3.76	2.750	69.85	1.251	31.77	1.036	26.31	74.53	331.54	49.72	8.70	C1586-148-2750-S	1.456	36.99	55.94	248.82	43.24	7.57
C1586-148-2875-M	1.586	40.28	0.148	3.76	2.875	73.03	1.300	33.01	1.073	27.25	74.53	331.54	47.31	8.28	C1586-148-2875-S	1.515	38.49	55.94	248.82	41.14	7.20
C1586-148-3000-M	1.586	40.28	0.148	3.76	3.000	76.20	1.348	34.25	1.110	28.18	74.53	331.54	45.12	7.90	C1586-148-3000-S	1.574	39.99	55.94	248.82	39.24	6.87
C1586-148-3250-M	1.586	40.28	0.148	3.76	3.250	82.55	1.446	36.72	1.183	30.06	74.53	331.54	41.30	7.23	C1586-148-3250-S	1.693	42.99	55.94	248.82	35.92	6.29
C1586-148-3500-M	1.586	40.28	0.148	3.76	3.500	88.90	1.543	39.19	1.257	31.94	74.53	331.54	38.08	6.66	C1586-148-3500-S	1.811	45.99	55.94	248.82	33.11	5.79
C1586-148-3750-M	1.586	40.28	0.148	3.76	3.750	95.25	1.640	41.66	1.331	33.81	74.53	331.54	35.33	6.18	C1586-148-3750-S	1.929	49.00	55.94	248.82	30.72	5.38
C1586-148-4000-M	1.586	40.28	0.148	3.76	4.000	101.60	1.737	44.13	1.405	35.69	74.53	331.54	32.94	5.76	C1586-148-4000-S	2.047	52.00	55.94	248.82	28.64	5.01
C1586-148-4250-M	1.586	40.28	0.148	3.76	4.250	107.95	1.835	46.60	1.479	37.56	74.53	331.54	30.86	5.40	C1586-148-4250-S	2.165	55.00	55.94	248.82	26.83	4.70
C1586-148-4500-M	1.586	40.28	0.148	3.76	4.500	114.30	1.932	49.07	1.553	39.44	74.53	331.54	29.02	5.08	C1586-148-4500-S	2.284	58.00	55.94	248.82	25.24	4.42
C1586-148-4750-M	1.586	40.28	0.148	3.76	4.750	120.65	2.029	51.54	1.627	41.31	74.53	331.54	27.39	4.79	C1586-148-4750-S	2.402	61.01	55.94	248.82	23.82	4.17
C1586-148-5000-M	1.586	40.28	0.148	3.76	5.000	127.00	2.127	54.01	1.700	43.19	74.53	331.54	25.94	4.54	C1586-148-5000-S	2.520	64.01	55.94	248.82	22.56	3.95
C1586-148-5250-M	1.586	40.28	0.148	3.76	5.250	133.35	2.224	56.48	1.774	45.07	74.53	331.54	24.63	4.31	C1586-148-5250-S	2.638	67.01	55.94	248.82	21.42	3.75
C1586-148-5500-M	1.586	40.28	0.148	3.76	5.500	139.70	2.321	58.96	1.848	46.94	74.53	331.54	23.45	4.10	C1586-148-5500-S	2.756	70.01	55.94	248.82	20.39	3.57
C1586-148-5750-M	1.586	40.28	0.148	3.76	5.750	146.05	2.418	61.43	1.922	48.82	74.53	331.54	22.37	3.91	C1586-148-5750-S	2.875	73.01	55.94	248.82	19.45	3.40
C1586-148-6000-M	1.586	40.28	0.148	3.76	6.000	152.40	2.516	63.90	1.996	50.69	74.53	331.54	21.39	3.74	C1586-148-6000-S	2.993	76.02	55.94	248.82	18.60	3.26
C1586-148-6250-M	1.586	40.28	0.148	3.76	6.250	158.75	2.613	66.37	2.070	52.57	74.53	331.54	20.49	3.59	C1586-148-6250-S	3.111	79.02	55.94	248.82	17.82	3.12
C1586-148-6500-M	1.586	40.28	0.148	3.76	6.500	165.10	2.710	68.84	2.144	54.45	74.53	331.54	19.67	3.44	C1586-148-6500-S	3.229	82.02	55.94	248.82	17.10	2.99
C1586-148-6750-M	1.586	40.28	0.148	3.76	6.750	171.45	2.808	71.31	2.217	56.32	74.53	331.54	18.91	3.31	C1586-148-6750-S	3.347	85.02	55.94	248.82	16.44	2.88
C1586-148-7000-M*	1.586	40.28	0.148	3.76	7.000	177.80	2.995	76.08	2.403	61.03	74.53	331.54	18.61	3.26	C1586-148-7000-S*	3.544	90.01	55.94	248.82	16.18	2.83
C1586-148-7500-M*	1.586	40.28	0.148	3.76	7.500	190.50	3.190	81.02	2.551	64.79	74.53	331.54	17.29	3.03	C1586-148-7500-S*	3.780	96.01	55.94	248.82	15.04	2.63
C1586-148-8000-M*	1.586	40.28	0.148	3.76	8.000	203.20	3.384	85.96	2.698	68.54	74.53	331.54	16.15	2.83	C1586-148-8000-S*	4.016	102.02	55.94	248.82	14.04	2.46
C1586-148-8500-M*	1.586	40.28	0.148	3.76	8.500	215.90	3.579	90.90	2.846	72.29	74.53	331.54	15.15	2.65	C1586-148-8500-S*	4.253	108.02	55.94	248.82	13.17	2.30
C1586-148-9000-M*	1.586	40.28	0.148	3.76	9.000	228.60	3.773	95.85	2.994	76.04	74.53	331.54	14.26	2.50	C1586-148-9000-S*	4.489	114.03	55.94	248.82	12.40	2.17
C1586-148-9500-M*	1.586	40.28	0.148	3.76	9.500	241.30	3.968	100.79	3.141	79.79	74.53	331.54	13.47	2.36	C1586-148-9500-S*	4.726	120.03	55.94	248.82	11.72	2.05
C1586-162-2375-M	1.586	40.28	0.162	4.12	2.375	60.33	1.207	30.67	1.051	26.70	95.76	425.98	82.01	14.35	C1586-162-2375-S	1.378	35.00	71.10	316.28	71.32	12.48
C1586-162-2500-M	1.586	40.28	0.162	4.12	2.500	63.50	1.261	32.03	1.095	27.80	95.76	425.98	77.30	13.53	C1586-162-2500-S	1.442	36.63	71.10	316.28	67.22	11.76
C1586-162-2625-M	1.586	40.28	0.162	4.12	2.625	66.68	1.315	33.40	1.138	28.91	95.76	425.98	73.10	12.79	C1586-162-2625-S	1.506	38.26	71.10	316.28	63.57	11.12
C1586-162-2750-M	1.586	40.28	0.162	4.12	2.750	69.85	1.369	34.77	1.181	30.01	95.76	425.98	69.34	12.13	C1586-162-2750-S	1.571	39.90	71.10	316.28	60.29	10.55
C1586-162-2875-M	1.586	40.28	0.162	4.12	2.875	73.03	1.423	36.14	1.225	31.11	95.76	425.98	65.94	11.54	C1586-162-2875-S	1.635	41.53	71.10	316.28	57.34	10.03
C1586-162-3000-M	1.586	40.28	0.162	4.12	3.000	76.20	1.477	37.50	1.268	32.21	95.76	425.98	62.86	11.00	C1586-162-3000-S	1.699	43.16	71.10	316.28	54.66	9.57

Part Numbers with an "*" are squared and not ground. **Part Numbers in bold** represent the newly expanded Associated Spring RAYMOND compression spring offering.

MUSIC WIRE

Catalog #	Outside Diameter (OD)		Wire Diameter (d)		Free Length (L) Approx		Load Length (L_1)		Solid Height (Sh) Approx		Load (P) at L_1		Spring Rate (R)	
	in	mm	in	mm	in	mm	in	mm	in	mm	lb	N	lb/in	N/mm
C1586-162-3250-M	1.586	40.28	0.162	4.12	3.250	82.55	1.584	40.24	1.355	34.41	95.76	425.98	57.49	10.06
C1586-162-3500-M	1.586	40.28	0.162	4.12	3.500	88.90	1.692	42.97	1.441	36.61	95.76	425.98	52.96	9.27
C1586-162-3750-M	1.586	40.28	0.162	4.12	3.750	95.25	1.800	45.71	1.528	38.81	95.76	425.98	49.10	8.59
C1586-162-4000-M	1.586	40.28	0.162	4.12	4.000	101.60	1.907	48.44	1.615	41.02	95.76	425.98	45.76	8.01
C1586-162-4250-M	1.586	40.28	0.162	4.12	4.250	107.95	2.015	51.18	1.701	43.22	95.76	425.98	42.85	7.50
C1586-162-4500-M	1.586	40.28	0.162	4.12	4.500	114.30	2.123	53.91	1.788	45.42	95.76	425.98	40.28	7.05
C1586-162-4750-M	1.586	40.28	0.162	4.12	4.750	120.65	2.230	56.65	1.875	47.62	95.76	425.98	38.01	6.65
C1586-162-5000-M	1.586	40.28	0.162	4.12	5.000	127.00	2.338	59.38	1.962	49.82	95.76	425.98	35.97	6.30
C1586-162-5250-M	1.586	40.28	0.162	4.12	5.250	133.35	2.446	62.12	2.048	52.02	95.76	425.98	34.15	5.98
C1586-162-5500-M	1.586	40.28	0.162	4.12	5.500	139.70	2.553	64.85	2.135	54.23	95.76	425.98	32.50	5.69
C1586-162-5750-M	1.586	40.28	0.162	4.12	5.750	146.05	2.661	67.59	2.222	56.43	95.76	425.98	31.00	5.43
C1586-162-6000-M	1.586	40.28	0.162	4.12	6.000	152.40	2.769	70.32	2.308	58.63	95.76	425.98	29.64	5.19
C1586-162-6250-M	1.586	40.28	0.162	4.12	6.250	158.75	2.876	73.06	2.395	60.83	95.76	425.98	28.39	4.97
C1586-162-6500-M	1.586	40.28	0.162	4.12	6.500	165.10	2.984	75.79	2.482	63.03	95.76	425.98	27.24	4.77
C1586-162-6750-M*	1.586	40.28	0.162	4.12	6.750	171.45	3.184	80.87	2.682	68.13	95.76	425.98	26.85	4.70
C1586-162-7000-M*	1.586	40.28	0.162	4.12	7.000	177.80	3.291	83.60	2.769	70.33	95.76	425.98	25.82	4.52
C1586-162-7500-M*	1.586	40.28	0.162	4.12	7.500	190.50	3.507	89.07	2.942	74.73	95.76	425.98	23.98	4.20
C1586-162-8000-M*	1.586	40.28	0.162	4.12	8.000	203.20	3.722	94.54	3.116	79.14	95.76	425.98	22.39	3.92
C1586-162-8500-M*	1.586	40.28	0.162	4.12	8.500	215.90	3.938	100.01	3.289	83.54	95.76	425.98	20.99	3.67
C1586-162-9000-M*	1.586	40.28	0.162	4.12	9.000	228.60	4.153	105.48	3.462	87.94	95.76	425.98	19.76	3.46
C1586-162-9500-M*	1.586	40.28	0.162	4.12	9.500	241.30	4.368	110.95	3.636	92.35	95.76	425.98	18.66	3.27
C1586-177-2250-M	1.586	40.28	0.177	4.50	2.250	57.15	1.255	31.89	1.134	28.80	122.35	544.22	123.00	21.53
C1586-177-2375-M	1.586	40.28	0.177	4.50	2.375	60.33	1.315	33.39	1.184	30.07	122.35	544.22	115.40	20.19
C1586-177-2500-M	1.586	40.28	0.177	4.50	2.500	63.50	1.374	34.90	1.234	31.35	122.35	544.22	108.67	19.02
C1586-177-2625-M	1.586	40.28	0.177	4.50	2.625	66.68	1.434	36.41	1.285	32.63	122.35	544.22	102.69	17.97
C1586-177-2750-M	1.586	40.28	0.177	4.50	2.750	69.85	1.493	37.92	1.335	33.90	122.35	544.22	97.34	17.03
C1586-177-2875-M	1.586	40.28	0.177	4.50	2.875	73.03	1.552	39.43	1.385	35.18	122.35	544.22	92.51	16.19
C1586-177-3000-M	1.586	40.28	0.177	4.50	3.000	76.20	1.612	40.94	1.435	36.46	122.35	544.22	88.14	15.42
C1586-177-3250-M	1.586	40.28	0.177	4.50	3.250	82.55	1.731	43.96	1.536	39.01	122.35	544.22	80.53	14.09
C1586-177-3500-M	1.586	40.28	0.177	4.50	3.500	88.90	1.850	46.98	1.636	41.56	122.35	544.22	74.13	12.97
C1586-177-3750-M	1.586	40.28	0.177	4.50	3.750	95.25	1.968	50.00	1.737	44.11	122.35	544.22	68.67	12.02
C1586-177-4000-M	1.586	40.28	0.177	4.50	4.000	101.60	2.087	53.02	1.837	46.67	122.35	544.22	63.96	11.19
C1586-177-4250-M	1.586	40.28	0.177	4.50	4.250	107.95	2.206	56.04	1.938	49.22	122.35	544.22	59.86	10.48
C1586-177-4500-M	1.586	40.28	0.177	4.50	4.500	114.30	2.325	59.05	2.038	51.77	122.35	544.22	56.25	9.84
C1586-177-4750-M	1.586	40.28	0.177	4.50	4.750	120.65	2.444	62.07	2.139	54.32	122.35	544.22	53.05	9.28
C1586-177-5000-M	1.586	40.28	0.177	4.50	5.000	127.00	2.563	65.09	2.239	56.87	122.35	544.22	50.20	8.78
C1586-177-5250-M	1.586	40.28	0.177	4.50	5.250	133.35	2.682	68.11	2.340	59.43	122.35	544.22	47.63	8.34
C1586-177-5500-M	1.586	40.28	0.177	4.50	5.500	139.70	2.800	71.13	2.440	61.98	122.35	544.22	45.32	7.93
C1586-177-5750-M	1.586	40.28	0.177	4.50	5.750	146.05	2.919	74.15	2.541	64.53	122.35	544.22	43.22	7.56
C1586-177-6000-M	1.586	40.28	0.177	4.50	6.000	152.40	3.038	77.17	2.641	67.08	122.35	544.22	41.31	7.23
C1586-177-6250-M	1.586	40.28	0.177	4.50	6.250	158.75	3.157	80.19	2.742	69.64	122.35	544.22	39.56	6.92
C1586-177-6500-M	1.586	40.28	0.177	4.50	6.500	165.10	3.276	83.20	2.842	72.19	122.35	544.22	37.95	6.64
C1586-177-6750-M	1.586	40.28	0.177	4.50	6.750	171.45	3.395	86.22	2.943	74.74	122.35	544.22	36.46	6.38
C1586-177-7000-M	1.586	40.28	0.177	4.50	7.000	177.80	3.513	89.24	3.043	77.29	122.35	544.22	35.09	6.14
C1586-177-7500-M	1.586	40.28	0.177	4.50	7.500	190.50	3.751	95.28	3.244	82.40	122.35	544.22	32.64	5.71
C1586-177-8000-M	1.586	40.28	0.177	4.50	8.000	203.20	3.989	101.32	3.445	87.50	122.35	544.22	30.50	5.34
C1586-177-8500-M*	1.586	40.28	0.177	4.50	8.500	215.90	4.319	109.71	3.761	95.52	122.35	544.22	29.27	5.12
C1586-177-9000-M*	1.586	40.28	0.177	4.50	9.000	228.60	4.557	115.75	3.962	100.63	122.35	544.22	27.54	4.82
C1586-177-9500-M*	1.586	40.28	0.177	4.50	9.500	241.30	4.795	121.79	4.163	105.73	122.35	544.22	26.00	4.55
C1586-192-2250-M	1.586	40.28	0.192	4.88	2.250	57.15	1.353	34.37	1.255	31.87	153.13	681.14	170.75	29.88
C1586-192-2375-M	1.586	40.28	0.192	4.88	2.375	60.33	1.418	36.02	1.312	33.32	153.13	681.14	160.03	28.00
C1586-192-2500-M	1.586	40.28	0.192	4.88	2.500	63.50	1.483	37.67	1.369	34.77	153.13	681.14	150.57	26.35
C1586-192-2625-M	1.586	40.28	0.192	4.88	2.625	66.68	1.548	39.32	1.426	36.21	153.13	681.14	142.17	24.88
C1586-192-2750-M	1.586	40.28	0.192	4.88	2.750	69.85	1.613	40.97	1.483	37.66	153.13	681.14	134.66	23.57
C1586-192-2875-M	1.586	40.28	0.192	4.88	2.875	73.03	1.678	42.62	1.540	39.11	153.13	681.14	127.90	22.38
C1586-192-3000-M	1.586	40.28	0.192	4.88	3.000	76.20	1.743	44.27	1.597	40.56	153.13	681.14	121.79	21.31
C1586-192-3250-M	1.586	40.28	0.192	4.88	3.250	82.55	1.873	47.56	1.711	43.46	153.13	681.14	111.17	19.45
C1586-192-3500-M	1.586	40.28	0.192	4.88	3.500	88.90	2.002	50.86	1.825	46.36	153.13	681.14	102.25	17.89
C1586-192-3750-M	1.586	40.28	0.192	4.88	3.750	95.25	2.132	54.16	1.939	49.25	153.13	681.14	94.66	16.56
C1586-192-4000-M	1.586	40.28	0.192	4.88	4.000	101.60	2.262	57.46	2.053	52.15	153.13	681.14	88.11	15.42
C1586-192-4250-M	1.586	40.28	0.192	4.88	4.250	107.95	2.392	60.76	2.167	55.05	153.13	681.14	82.41	14.42
C1586-192-4500-M	1.586	40.28	0.192	4.88	4.500	114.30	2.522	64.05	2.281	57.95	153.13	681.14	77.41	13.55
C1586-192-4750-M	1.586	40.28	0.192	4.88	4.750	120.65	2.652	67.35	2.395	60.84	153.13	681.14	72.98	12.77
C1586-192-5000-M	1.586	40.28	0.192	4.88	5.000	127.00	2.782	70.65	2.510	63.74	153.13	681.14	69.02	12.08

STAINLESS STEEL

Catalog #	Load Length (L_1)		Load (P) at L_1		Spring Rate (R)	
	in	mm	lb	N	lb/in	N/mm
C1586-162-3250-S	1.828	46.42	71.10	316.28	49.99	8.75
C1586-162-3500-S	1.956	49.69	71.10	316.28	46.06	8.06
C1586-162-3750-S	2.085	52.95	71.10	316.28	42.69	7.47
C1586-162-4000-S	2.213	56.21	71.10	316.28	39.79	6.96
C1586-162-4250-S	2.342	59.48	71.10	316.28	37.26	6.52
C1586-162-4500-S	2.470	62.74	71.10	316.28	35.03	6.13
C1586-162-4750-S	2.599	66.00	71.10	316.28	33.05	5.78
C1586-162-5000-S	2.727	69.27	71.10	316.28	31.28	5.47
C1586-162-5250-S	2.855	72.53	71.10	316.28	29.69	5.20
C1586-162-5500-S	2.984	75.79	71.10	316.28	28.26	4.95
C1586-162-5750-S	3.112	79.06	71.10	316.28	26.96	4.72
C1586-162-6000-S	3.241	82.32	71.10	316.28	25.77	4.51
C1586-162-6250-S	3.369	85.58	71.10	316.28	24.68	4.32
C1586-162-6500-S	3.498	88.84	71.10	316.28	23.68	4.14
C1586-162-6750-S*	3.705	94.11	71.10	316.28	23.35	4.09
C1586-162-7000-S*	3.834	97.37	71.10	316.28	22.46	3.93
C1586-162-7500-S*	4.090	103.90	71.10	316.28	20.85	3.65
C1586-162-8000-S*	4.347	110.42	71.10	316.28	19.47	3.41
C1586-162-8500-S*	4.604	116.95	71.10	316.28	18.25	3.19
C1586-162-9000-S*	4.861	123.48	71.10	316.28	17.18	3.01
C1586-162-9500-S*	5.118	130.00	71.10	316.28	16.23	2.84
C1586-177-2250-S	1.410	35.83	89.80	399.43	106.96	18.72
C1586-177-2375-S	1.480	37.59	89.80	399.43	100.34	17.56
C1586-177-2500-S	1.550	39.36	89.80	399.43	94.50	16.54
C1586-177-2625-S	1.619	41.13	89.80	399.43	89.30	15.63
C1586-177-2750-S	1.689	42.90	89.80	399.43	84.64	14.81
C1586-177-2875-S	1.759	44.67	89.80	399.43	80.44	14.08
C1586-177-3000-S	1.828	46.44	89.80	399.43	76.64	13.41
C1586-177-3250-S	1.968	49.98	89.80	399.43	70.03	12.25
C1586-177-3500-S	2.107	53.52	89.80	399.43	64.46	11.28
C1586-177-3750-S	2.246	57.06	89.80	399.43	59.72	10.45
C1586-177-4000-S	2.386	60.59	89.80	399.43	55.62	9.73
C1586-177-4250-S	2.525	64.13	89.80	399.43	52.05	9.11
C1586-177-4500-S	2.664	67.67	89.80	399.43	48.91	8.56
C1586-177-4750-S	2.803	71.21	89.80	399.43	46.13	8.07
C1586-177-5000-S	2.943	74.75	89.80	399.43	43.65	7.64
C1586-177-5250-S	3.082	78.29	89.80	399.43	41.42	7.25
C1586-177-5500-S	3.221	81.82	89.80	399.43	39.41	6.90
C1586-177-5750-S	3.361	85.36	89.80	399.43	37.58	6.58
C1586-177-6000-S	3.500	88.90	89.80	399.43	35.92	6.29
C1586-177-6250-S	3.639	92.44	89.80	399.43	34.40	6.02
C1586-177-6500-S	3.779	95.98	89.80	399.43	33.00	5.77
C1586-177-6750-S	3.918	99.51	89.80	399.43	31.71	5.55
C1586-177-7000-S	4.057	103.05	89.80	399.43	30.51	5.34
C1586-177-7500-S	4.336	110.13	89.80	399.43	28.38	4.97
C1586-177-8000-S	4.614	117.21	89.80	399.43	26.52	4.64
C1586-177-8500-S*	4.971	126.27	89.80	399.43	25.45	4.45
C1586-177-9000-S*	5.250	133.35	89.80	399.43	23.95	4.19
C1586-177-9500-S*	5.529	140.43	89.80	399.43	22.61	3.96
C1586-192-2250-S	1.502	38.14	111.10	494.20	148.47	25.98
C1586-192-2375-S	1.577	40.05	111.10	494.20	139.15	24.35
C1586-192-2500-S	1.651	41.95	111.10	494.20	130.93	22.91
C1586-192-2625-S	1.726	43.85	111.10	494.20	123.63	21.64
C1586-192-2750-S	1.801	45.75	111.10	494.20	117.10	20.49
C1586-192-2875-S	1.876	47.65	111.10	494.20	111.22	19.46
C1586-192-3000-S	1.951	49.55	111.10	494.20	105.91	18.53
C1586-192-3250-S	2.101	53.36	111.10	494.20	96.67	16.92
C1586-192-3500-S	2.250	57.16	111.10	494.20	88.91	15.56
C1586-192-3750-S	2.400	60.96	111.10	494.20	82.31	14.40
C1586-192-4000-S	2.550	64.77	111.10	494.20	76.62	13.41
C1586-192-4250-S	2.700	68.57	111.10	494.20	71.66	12.54
C1586-192-4500-S	2.849	72.38	111.10	494.20	67.31	11.78
C1586-192-4750-S	2.999	76.18	111.10	494.20	63.46	11.10
C1586-192-5000-S	3.149	79.98	111.10	494.20	60.02	10.50

FOR INFORMATION ON ALTERNATIVE FINISHES, SEE PAGE 311

Part Numbers with an "*" are squared and not ground. **Part Numbers in bold** represent the newly expanded Associated Spring RAYMOND compression spring offering.

MUSIC WIRE															STAINLESS STEEL						
Catalog #	Outside Diameter (OD)		Wire Diameter (d)		Free Length (L) Approx		Load Length (L_1)		Solid Height (Sh) Approx		Load (P) at L_1		Spring Rate (R)		Catalog #	Load Length (L_1)		Load (P) at L_1		Spring Rate (R)	
	in	mm	in	mm	in	mm	in	mm	in	mm	lb	N	lb/in	N/mm		in	mm	lb	N	lb/in	N/mm
C1586-192-5250-M	1.586	40.28	0.192	4.88	5.250	133.35	2.911	73.95	2.624	66.64	153.13	681.14	65.48	11.46	**C1586-192-5250-S**	3.299	83.79	111.10	494.20	56.94	9.96
C1586-192-5500-M	1.586	40.28	0.192	4.88	5.500	139.70	3.041	77.25	2.738	69.54	153.13	681.14	62.28	10.90	**C1586-192-5500-S**	3.448	87.59	111.10	494.20	54.15	9.48
C1586-192-5750-M	1.586	40.28	0.192	4.88	5.750	146.05	3.171	80.54	2.852	72.43	153.13	681.14	59.38	10.39	**C1586-192-5750-S**	3.598	91.39	111.10	494.20	51.63	9.04
C1586-192-6000-M	1.586	40.28	0.192	4.88	6.000	152.40	3.301	83.84	2.966	75.33	153.13	681.14	56.73	9.93	**C1586-192-6000-S**	3.748	95.20	111.10	494.20	49.33	8.63
C1586-192-6250-M	1.586	40.28	0.192	4.88	6.250	158.75	3.431	87.14	3.080	78.23	153.13	681.14	54.32	9.51	**C1586-192-6250-S**	3.898	99.00	111.10	494.20	47.23	8.27
C1586-192-6500-M	1.586	40.28	0.192	4.88	6.500	165.10	3.561	90.44	3.194	81.13	153.13	681.14	52.09	9.12	**C1586-192-6500-S**	4.047	102.80	111.10	494.20	45.30	7.93
C1586-192-6750-M	1.586	40.28	0.192	4.88	6.750	171.45	3.690	93.74	3.308	84.02	153.13	681.14	50.05	8.76	**C1586-192-6750-S**	4.197	106.61	111.10	494.20	43.52	7.62
C1586-192-7000-M	1.586	40.28	0.192	4.88	7.000	177.80	3.820	97.04	3.422	86.92	153.13	681.14	48.16	8.43	**C1586-192-7000-S**	4.347	110.41	111.10	494.20	41.88	7.33
C1586-192-7500-M	1.586	40.28	0.192	4.88	7.500	190.50	4.080	103.63	3.650	92.72	153.13	681.14	44.77	7.84	**C1586-192-7500-S**	4.646	118.02	111.10	494.20	38.93	6.81
C1586-192-8000-M	1.586	40.28	0.192	4.88	8.000	203.20	4.340	110.23	3.878	98.51	153.13	681.14	41.83	7.32	**C1586-192-8000-S**	4.946	125.63	111.10	494.20	36.38	6.37
C1586-192-8500-M	1.586	40.28	0.192	4.88	8.500	215.90	4.599	116.82	4.107	104.31	153.13	681.14	39.26	6.87	**C1586-192-8500-S**	5.245	133.23	111.10	494.20	34.14	5.97
C1586-192-9000-M	1.586	40.28	0.192	4.88	9.000	228.60	4.859	123.42	4.335	110.10	153.13	681.14	36.98	6.47	**C1586-192-9000-S**	5.545	140.84	111.10	494.20	32.16	5.63
C1586-192-9500-M	1.586	40.28	0.192	4.88	9.500	241.30	5.119	130.02	4.563	115.90	153.13	681.14	34.95	6.12	**C1586-192-9500-S**	5.844	148.45	111.10	494.20	30.39	5.32
C1586-207-2125-M	1.586	40.28	0.207	5.26	2.125	53.98	1.375	34.94	1.305	33.16	188.32	837.71	251.25	43.97	**C1586-207-2125-S**	1.507	38.27	135.09	600.90	218.48	38.23
C1586-207-2250-M	1.586	40.28	0.207	5.26	2.250	57.15	1.446	36.72	1.369	34.77	188.32	837.71	234.15	40.98	**C1586-207-2250-S**	1.587	40.30	135.09	600.90	203.61	35.63
C1586-207-2375-M	1.586	40.28	0.207	5.26	2.375	60.33	1.516	38.51	1.433	36.39	188.32	837.71	219.22	38.36	**C1586-207-2375-S**	1.666	42.33	135.09	600.90	190.63	33.36
C1586-207-2500-M	1.586	40.28	0.207	5.26	2.500	63.50	1.586	40.29	1.496	38.00	188.32	837.71	206.09	36.07	**C1586-207-2500-S**	1.746	44.35	135.09	600.90	179.21	31.36
C1586-207-2625-M	1.586	40.28	0.207	5.26	2.625	66.68	1.656	42.07	1.560	39.62	188.32	837.71	194.43	34.03	**C1586-207-2625-S**	1.826	46.38	135.09	600.90	169.07	29.59
C1586-207-2750-M	1.586	40.28	0.207	5.26	2.750	69.85	1.727	43.86	1.623	41.23	188.32	837.71	184.03	32.21	**C1586-207-2750-S**	1.906	48.41	135.09	600.90	160.03	28.00
C1586-207-2875-M	1.586	40.28	0.207	5.26	2.875	73.03	1.797	45.64	1.687	42.85	188.32	837.71	174.68	30.57	**C1586-207-2875-S**	1.986	50.44	135.09	600.90	151.90	26.58
C1586-207-3000-M	1.586	40.28	0.207	5.26	3.000	76.20	1.867	47.43	1.751	44.47	188.32	837.71	166.24	29.09	**C1586-207-3000-S**	2.066	52.46	135.09	600.90	144.56	25.30
C1586-207-3250-M	1.586	40.28	0.207	5.26	3.250	82.55	2.008	50.99	1.878	47.70	188.32	837.71	151.59	26.53	**C1586-207-3250-S**	2.225	56.52	135.09	600.90	131.81	23.07
C1586-207-3500-M	1.586	40.28	0.207	5.26	3.500	88.90	2.148	54.56	2.005	50.93	188.32	837.71	139.31	24.38	**C1586-207-3500-S**	2.385	60.57	135.09	600.90	121.14	21.20
C1586-207-3750-M	1.586	40.28	0.207	5.26	3.750	95.25	2.289	58.13	2.132	54.16	188.32	837.71	128.87	22.55	**C1586-207-3750-S**	2.544	64.63	135.09	600.90	112.06	19.61
C1586-207-4000-M	1.586	40.28	0.207	5.26	4.000	101.60	2.429	61.70	2.259	57.39	188.32	837.71	119.88	20.98	**C1586-207-4000-S**	2.704	68.68	135.09	600.90	104.25	18.24
C1586-207-4250-M	1.586	40.28	0.207	5.26	4.250	107.95	2.570	65.27	2.387	60.62	188.32	837.71	112.07	19.61	**C1586-207-4250-S**	2.864	72.74	135.09	600.90	97.45	17.05
C1586-207-4500-M	1.586	40.28	0.207	5.26	4.500	114.30	2.710	68.84	2.514	63.85	188.32	837.71	105.21	18.41	**C1586-207-4500-S**	3.023	76.80	135.09	600.90	91.49	16.01
C1586-207-4750-M	1.586	40.28	0.207	5.26	4.750	120.65	2.851	72.40	2.641	67.08	188.32	837.71	99.15	17.35	**C1586-207-4750-S**	3.183	80.85	135.09	600.90	86.21	15.09
C1586-207-5000-M	1.586	40.28	0.207	5.26	5.000	127.00	2.991	75.97	2.768	70.32	188.32	837.71	93.74	16.40	**C1586-207-5000-S**	3.343	84.91	135.09	600.90	81.51	14.26
C1586-207-5250-M	1.586	40.28	0.207	5.26	5.250	133.35	3.131	79.54	2.896	73.55	188.32	837.71	88.90	15.56	**C1586-207-5250-S**	3.502	88.96	135.09	600.90	77.30	13.53
C1586-207-5500-M	1.586	40.28	0.207	5.26	5.500	139.70	3.272	83.11	3.023	76.78	188.32	837.71	84.53	14.79	**C1586-207-5500-S**	3.662	93.02	135.09	600.90	73.50	12.86
C1586-207-5750-M	1.586	40.28	0.207	5.26	5.750	146.05	3.412	86.68	3.150	80.01	188.32	837.71	80.57	14.10	**C1586-207-5750-S**	3.822	97.07	135.09	600.90	70.06	12.26
C1586-207-6000-M	1.586	40.28	0.207	5.26	6.000	152.40	3.553	90.24	3.277	83.24	188.32	837.71	76.96	13.47	**C1586-207-6000-S**	3.981	101.13	135.09	600.90	66.92	11.71
C1586-207-6250-M	1.586	40.28	0.207	5.26	6.250	158.75	3.693	93.81	3.404	86.47	188.32	837.71	73.66	12.89	**C1586-207-6250-S**	4.141	105.18	135.09	600.90	64.05	11.21
C1586-207-6500-M	1.586	40.28	0.207	5.26	6.500	165.10	3.834	97.38	3.532	89.70	188.32	837.71	70.64	12.36	**C1586-207-6500-S**	4.301	109.24	135.09	600.90	61.42	10.75
C1586-207-6750-M	1.586	40.28	0.207	5.26	6.750	171.45	3.974	100.95	3.659	92.93	188.32	837.71	67.85	11.87	**C1586-207-6750-S**	4.460	113.29	135.09	600.90	59.00	10.33
C1586-207-7000-M	1.586	40.28	0.207	5.26	7.000	177.80	4.115	104.52	3.786	96.16	188.32	837.71	65.27	11.42	**C1586-207-7000-S**	4.620	117.35	135.09	600.90	56.76	9.93
C1586-207-7500-M	1.586	40.28	0.207	5.26	7.500	190.50	4.396	111.65	4.040	102.63	188.32	837.71	60.67	10.62	**C1586-207-7500-S**	4.939	125.46	135.09	600.90	52.76	9.23
C1586-207-8000-M	1.586	40.28	0.207	5.26	8.000	203.20	4.677	118.79	4.295	109.09	188.32	837.71	56.67	9.92	**C1586-207-8000-S**	5.259	133.57	135.09	600.90	49.28	8.62
C1586-207-8500-M	1.586	40.28	0.207	5.26	8.500	215.90	4.958	125.93	4.549	115.55	188.32	837.71	53.17	9.30	**C1586-207-8500-S**	5.578	141.68	135.09	600.90	46.23	8.09
C1586-207-9000-M	1.586	40.28	0.207	5.26	9.000	228.60	5.239	133.06	4.804	122.01	188.32	837.71	50.07	8.76	**C1586-207-9000-S**	5.897	149.79	135.09	600.90	43.54	7.62
C1586-207-9500-M	1.586	40.28	0.207	5.26	9.500	241.30	5.520	140.20	5.058	128.48	188.32	837.71	47.31	8.28	**C1586-207-9500-S**	6.217	157.90	135.09	600.90	41.14	7.20
C1586-225-2125-M	1.586	40.28	0.225	5.72	2.125	53.98	1.472	37.39	1.425	36.19	236.67	1052.77	362.54	63.44	**C1586-225-2125-S**	1.594	40.48	167.48	745.00	315.25	55.17
C1586-225-2250-M	1.586	40.28	0.225	5.72	2.250	57.15	1.548	39.33	1.496	38.00	236.67	1052.77	337.36	59.04	**C1586-225-2250-S**	1.679	42.65	167.48	745.00	293.36	51.34
C1586-225-2375-M	1.586	40.28	0.225	5.72	2.375	60.33	1.625	41.27	1.567	39.80	236.67	1052.77	315.45	55.20	**C1586-225-2375-S**	1.764	44.82	167.48	745.00	274.31	48.00
C1586-225-2500-M	1.586	40.28	0.225	5.72	2.500	63.50	1.701	43.21	1.638	41.61	236.67	1052.77	296.22	51.84	**C1586-225-2500-S**	1.850	46.98	167.48	745.00	257.58	45.08
C1586-225-2625-M	1.586	40.28	0.225	5.72	2.625	66.68	1.777	45.14	1.709	43.41	236.67	1052.77	279.20	48.86	**C1586-225-2625-S**	1.935	49.15	167.48	745.00	242.78	42.49
C1586-225-2750-M	1.586	40.28	0.225	5.72	2.750	69.85	1.854	47.08	1.780	45.22	236.67	1052.77	264.02	46.20	**C1586-225-2750-S**	2.020	51.32	167.48	745.00	229.58	40.18
C1586-225-2875-M	1.586	40.28	0.225	5.72	2.875	73.03	1.930	49.02	1.851	47.02	236.67	1052.77	250.41	43.82	**C1586-225-2875-S**	2.106	53.49	167.48	745.00	217.75	38.11
C1586-225-3000-M	1.586	40.28	0.225	5.72	3.000	76.20	2.006	50.96	1.922	48.83	236.67	1052.77	238.14	41.67	**C1586-225-3000-S**	2.191	55.66	167.48	745.00	207.08	36.24
C1586-225-3250-M	1.586	40.28	0.225	5.72	3.250	82.55	2.159	54.83	2.064	52.44	236.67	1052.77	216.87	37.95	**C1586-225-3250-S**	2.362	59.99	167.48	745.00	188.59	33.00
C1586-225-3500-M	1.586	40.28	0.225	5.72	3.500	88.90	2.311	58.71	2.207	56.05	236.67	1052.77	199.10	34.84	**C1586-225-3500-S**	2.533	64.33	167.48	745.00	173.13	30.30
C1586-225-3750-M	1.586	40.28	0.225	5.72	3.750	95.25	2.464	62.58	2.349	59.66	236.67	1052.77	184.02	32.20	**C1586-225-3750-S**	2.703	68.66	167.48	745.00	160.01	28.00
C1586-225-4000-M	1.586	40.28	0.225	5.72	4.000	101.60	2.616	66.46	2.491	63.27	236.67	1052.77	171.06	29.93	**C1586-225-4000-S**	2.874	73.00	167.48	745.00	148.74	26.03
C1586-225-4250-M	1.586	40.28	0.225	5.72	4.250	107.95	2.769	70.33	2.633	66.88	236.67	1052.77	159.80	27.97	**C1586-225-4250-S**	3.045	77.34	167.48	745.00	138.96	24.32
C1586-225-4500-M	1.586	40.28	0.225	5.72	4.500	114.30	2.922	74.21	2.775	70.49	236.67	1052.77	149.94	26.24	**C1586-225-4500-S**	3.215	81.67	167.48	745.00	130.38	22.82
C1586-225-4750-M	1.586	40.28	0.225	5.72	4.750	120.65	3.074	78.08	2.917	74.10	236.67	1052.77	141.22	24.71	**C1586-225-4750-S**	3.386	86.01	167.48	745.00	122.80	21.49
C1586-225-5000-M	1.586	40.28	0.225	5.72	5.000	127.00	3.227	81.96	3.059	77.71	236.67	1052.77	133.46	23.36	**C1586-225-5000-S**	3.557	90.34	167.48	745.00	116.05	20.31
C1586-225-5250-M	1.586	40.28	0.225	5.72	5.250	133.35	3.379	85.83	3.202	81.32	236.67	1052.77	126.51	22.14	**C1586-225-5250-S**	3.728	94.68	167.48	745.00	110.01	19.25
C1586-225-5500-M	1.586	40.28	0.225	5.72	5.500	139.70	3.532	89.71	3.344	84.93	236.67	1052.77	120.25	21.04	**C1586-225-5500-S**	3.898	99.02	167.48	745.00	104.56	18.30
C1586-225-5750-M	1.586	40.28	0.225	5.72	5.750	146.05	3.684	93.58	3.486	88.54	236.67	1052.77	114.58	20.05	**C1586-225-5750-S**	4.069	103.35	167.48	745.00	99.63	17.44
C1586-225-6000-M	1.586	40.28	0.225	5.72	6.000	152.40	3.837	97.46	3.628	92.15	236.67	1052.77	109.41	19.15	**C1586-225-6000-S**	4.240	107.69	167.48	745.00	95.14	16.65
C1586-225-6250-M	1.586	40.28	0.225	5.72	6.250	158.75	3.989	101.33	3.770	95.76	236.67	1052.77	104.70	18.32	**C1586-225-6250-S**	4.410	112.02	167.48	745.00	91.04	15.93
C1586-225-6500-M	1.586	40.28	0.225	5.72	6.500	165.10	4.142	105.21	3.912	99.37	236.67	1052.77	100.37	17.57	**C1586-225-6500-S**	4.581	116.36	167.48	745.00	87.28	15.27

Part Numbers with an "*" are squared and not ground. **Part Numbers in bold** represent the newly expanded Associated Spring RAYMOND compression spring offering.

MUSIC WIRE															STAINLESS STEEL					
Catalog #	Outside Diameter (OD)		Wire Diameter (d)		Free Length (L) Approx		Load Length (L_1)		Solid Height (Sh) Approx		Load (P) at L_1		Spring Rate (R)		Catalog #	Load Length (L_1)		Load (P) at L_1		Spring Rate (R)	
	in	mm	in	mm	in	mm	in	mm	in	mm	lb	N	lb/in	N/mm		in	mm	lb	N	lb/in	N/mm
C1586-225-6750-M	1.586	40.28	0.225	5.72	6.750	171.45	4.295	109.08	4.054	102.98	236.67	1052.77	96.39	16.87	**C1586-225-6750-S**	4.752	120.70	167.48	745.00	83.82	14.67
C1586-225-7000-M	1.586	40.28	0.225	5.72	7.000	177.80	4.447	112.96	4.197	106.59	236.67	1052.77	92.71	16.22	**C1586-225-7000-S**	4.922	125.03	167.48	745.00	80.62	14.11
C1586-225-7500-M	1.586	40.28	0.225	5.72	7.500	190.50	4.752	120.71	4.481	113.81	236.67	1052.77	86.13	15.07	**C1586-225-7500-S**	5.264	133.70	167.48	745.00	74.90	13.11
C1586-225-8000-M	1.586	40.28	0.225	5.72	8.000	203.20	5.057	128.46	4.765	121.03	236.67	1052.77	80.43	14.08	**C1586-225-8000-S**	5.605	142.38	167.48	745.00	69.94	12.24
C1586-225-8500-M	1.586	40.28	0.225	5.72	8.500	215.90	5.363	136.21	5.049	128.25	236.67	1052.77	75.44	13.20	**C1586-225-8500-S**	5.947	151.05	167.48	745.00	65.60	11.48
C1586-225-9000-M	1.586	40.28	0.225	5.72	9.000	228.60	5.668	143.96	5.334	135.47	236.67	1052.77	71.02	12.43	**C1586-225-9000-S**	6.288	159.72	167.48	745.00	61.76	10.81
C1586-225-9500-M	1.586	40.28	0.225	5.72	9.500	241.30	5.973	151.71	5.618	142.69	236.67	1052.77	67.10	11.74	**C1586-225-9500-S**	6.630	168.39	167.48	745.00	58.35	10.21
C1586-250-2250-M	1.586	40.28	0.250	6.35	2.250	57.15	1.675	42.54	1.652	41.96	315.42	1403.05	548.44	95.98	**C1586-250-2250-S**	1.791	45.48	219.12	974.69	476.91	83.46
C1586-250-2375-M	1.586	40.28	0.250	6.35	2.375	60.33	1.759	44.67	1.733	44.01	315.42	1403.05	511.88	89.58	**C1586-250-2375-S**	1.883	47.82	219.12	974.69	445.11	77.89
C1586-250-2500-M	1.586	40.28	0.250	6.35	2.500	63.50	1.843	46.81	1.813	46.05	315.42	1403.05	479.89	83.98	**C1586-250-2500-S**	1.975	50.16	219.12	974.69	417.29	73.03
C1586-250-2625-M	1.586	40.28	0.250	6.35	2.625	66.68	1.927	48.94	1.894	48.10	315.42	1403.05	451.66	79.04	**C1586-250-2625-S**	2.067	52.50	219.12	974.69	392.75	68.73
C1586-250-2750-M	1.586	40.28	0.250	6.35	2.750	69.85	2.011	51.07	1.974	50.14	315.42	1403.05	426.57	74.65	**C1586-250-2750-S**	2.159	54.85	219.12	974.69	370.93	64.91
C1586-250-2875-M	1.586	40.28	0.250	6.35	2.875	73.03	2.094	53.20	2.055	52.19	315.42	1403.05	404.12	70.72	**C1586-250-2875-S**	2.251	57.19	219.12	974.69	351.40	61.50
C1586-250-3000-M	1.586	40.28	0.250	6.35	3.000	76.20	2.178	55.33	2.135	54.23	315.42	1403.05	383.91	67.18	**C1586-250-3000-S**	2.344	59.53	219.12	974.69	333.83	58.42
C1586-250-3250-M	1.586	40.28	0.250	6.35	3.250	82.55	2.346	59.59	2.296	58.32	315.42	1403.05	349.01	61.08	**C1586-250-3250-S**	2.528	64.21	219.12	974.69	303.49	53.11
C1586-250-3500-M	1.586	40.28	0.250	6.35	3.500	88.90	2.514	63.86	2.457	62.41	315.42	1403.05	319.92	55.99	**C1586-250-3500-S**	2.712	68.89	219.12	974.69	278.20	48.68
C1586-250-3750-M	1.586	40.28	0.250	6.35	3.750	95.25	2.682	68.12	2.618	66.50	315.42	1403.05	295.32	51.68	**C1586-250-3750-S**	2.897	73.58	219.12	974.69	256.80	44.94
C1586-250-4000-M	1.586	40.28	0.250	6.35	4.000	101.60	2.850	72.38	2.779	70.59	315.42	1403.05	274.22	47.99	**C1586-250-4000-S**	3.081	78.26	219.12	974.69	238.45	41.73
C1586-250-4250-M	1.586	40.28	0.250	6.35	4.250	107.95	3.018	76.65	2.940	74.68	315.42	1403.05	255.94	44.79	**C1586-250-4250-S**	3.265	82.94	219.12	974.69	222.56	38.95
C1586-250-4500-M	1.586	40.28	0.250	6.35	4.500	114.30	3.185	80.91	3.101	78.77	315.42	1403.05	239.94	41.99	**C1586-250-4500-S**	3.450	87.63	219.12	974.69	208.65	36.51
C1586-250-4750-M	1.586	40.28	0.250	6.35	4.750	120.65	3.353	85.17	3.262	82.86	315.42	1403.05	225.83	39.52	**C1586-250-4750-S**	3.634	92.31	219.12	974.69	196.37	34.37
C1586-250-5000-M	1.586	40.28	0.250	6.35	5.000	127.00	3.521	89.44	3.423	86.95	315.42	1403.05	213.28	37.32	**C1586-250-5000-S**	3.819	96.99	219.12	974.69	185.46	32.46
C1586-250-5250-M	1.586	40.28	0.250	6.35	5.250	133.35	3.689	93.70	3.584	91.04	315.42	1403.05	202.06	35.36	**C1586-250-5250-S**	4.003	101.67	219.12	974.69	175.70	30.75
C1586-250-5500-M	1.586	40.28	0.250	6.35	5.500	139.70	3.857	97.96	3.745	95.13	315.42	1403.05	191.96	33.59	**C1586-250-5500-S**	4.187	106.36	219.12	974.69	166.92	29.21
C1586-250-5750-M	1.586	40.28	0.250	6.35	5.750	146.05	4.025	102.23	3.906	99.22	315.42	1403.05	182.81	31.99	**C1586-250-5750-S**	4.372	111.04	219.12	974.69	158.97	27.82
C1586-250-6000-M	1.586	40.28	0.250	6.35	6.000	152.40	4.192	106.49	4.067	103.31	315.42	1403.05	174.50	30.54	**C1586-250-6000-S**	4.556	115.72	219.12	974.69	151.74	26.56
C1586-250-6250-M	1.586	40.28	0.250	6.35	6.250	158.75	4.360	110.75	4.228	107.40	315.42	1403.05	166.92	29.21	**C1586-250-6250-S**	4.740	120.40	219.12	974.69	145.15	25.40
C1586-250-6500-M	1.586	40.28	0.250	6.35	6.500	165.10	4.528	115.02	4.389	111.49	315.42	1403.05	159.96	27.99	**C1586-250-6500-S**	4.925	125.09	219.12	974.69	139.10	24.34
C1586-250-6750-M	1.586	40.28	0.250	6.35	6.750	171.45	4.696	119.28	4.550	115.58	315.42	1403.05	153.56	26.87	**C1586-250-6750-S**	5.109	129.77	219.12	974.69	133.53	23.37
C1586-250-7000-M	1.586	40.28	0.250	6.35	7.000	177.80	4.864	123.54	4.711	119.67	315.42	1403.05	147.66	25.84	**C1586-250-7000-S**	5.293	134.45	219.12	974.69	128.40	22.47
C1586-250-7500-M	1.586	40.28	0.250	6.35	7.500	190.50	5.200	132.07	5.033	127.84	315.42	1403.05	137.11	23.99	**C1586-250-7500-S**	5.662	143.82	219.12	974.69	119.23	20.86
C1586-250-8000-M	1.586	40.28	0.250	6.35	8.000	203.20	5.535	140.59	5.355	136.02	315.42	1403.05	127.97	22.39	**C1586-250-8000-S**	6.031	153.18	219.12	974.69	111.28	19.47
C1586-250-8500-M	1.586	40.28	0.250	6.35	8.500	215.90	5.871	149.12	5.677	144.20	315.42	1403.05	119.97	21.00	**C1586-250-8500-S**	6.400	162.55	219.12	974.69	104.32	18.26
C1586-250-9000-M	1.586	40.28	0.250	6.35	9.000	228.60	6.207	157.65	5.999	152.38	315.42	1403.05	112.91	19.76	**C1586-250-9000-S**	6.768	171.92	219.12	974.69	98.19	17.18
C1586-250-9500-M	1.586	40.28	0.250	6.35	9.500	241.30	6.542	166.17	6.321	160.56	315.42	1403.05	106.64	18.66	**C1586-250-9500-S**	7.137	181.28	219.12	974.69	92.73	16.23
C1645-135-2750-M	1.645	41.78	0.135	3.43	2.750	69.85	1.110	28.20	0.862	21.89	55.74	247.96	33.99	5.95	**C1645-135-2750-S**	1.321	33.54	42.25	187.94	29.56	5.17
C1645-135-2875-M	1.645	41.78	0.135	3.43	2.875	73.03	1.152	29.27	0.891	22.63	55.74	247.96	32.36	5.66	**C1645-135-2875-S**	1.374	34.89	42.25	187.94	28.14	4.92
C1645-135-3000-M	1.645	41.78	0.135	3.43	3.000	76.20	1.195	30.35	0.920	23.37	55.74	247.96	30.88	5.40	**C1645-135-3000-S**	1.427	36.23	42.25	187.94	26.85	4.70
C1645-135-3250-M	1.645	41.78	0.135	3.43	3.250	82.55	1.280	32.50	0.978	24.85	55.74	247.96	28.29	4.95	**C1645-135-3250-S**	1.532	38.92	42.25	187.94	24.60	4.31
C1645-135-3500-M	1.645	41.78	0.135	3.43	3.500	88.90	1.364	34.65	1.037	26.33	55.74	247.96	26.10	4.57	**C1645-135-3500-S**	1.638	41.61	42.25	187.94	22.70	3.97
C1645-135-3750-M	1.645	41.78	0.135	3.43	3.750	95.25	1.449	36.80	1.095	27.81	55.74	247.96	24.23	4.24	**C1645-135-3750-S**	1.744	44.30	42.25	187.94	21.07	3.69
C1645-135-4000-M	1.645	41.78	0.135	3.43	4.000	101.60	1.534	38.95	1.153	29.29	55.74	247.96	22.60	3.96	**C1645-135-4000-S**	1.850	46.99	42.25	187.94	19.65	3.44
C1645-135-4250-M	1.645	41.78	0.135	3.43	4.250	107.95	1.618	41.10	1.212	30.77	55.74	247.96	21.18	3.71	**C1645-135-4250-S**	1.956	49.69	42.25	187.94	18.42	3.22
C1645-135-4500-M	1.645	41.78	0.135	3.43	4.500	114.30	1.703	43.26	1.270	32.25	55.74	247.96	19.93	3.49	**C1645-135-4500-S**	2.062	52.38	42.25	187.94	17.33	3.03
C1645-135-4750-M	1.645	41.78	0.135	3.43	4.750	120.65	1.788	45.41	1.328	33.73	55.74	247.96	18.82	3.29	**C1645-135-4750-S**	2.168	55.07	42.25	187.94	16.36	2.86
C1645-135-5000-M	1.645	41.78	0.135	3.43	5.000	127.00	1.872	47.56	1.386	35.22	55.74	247.96	17.82	3.12	**C1645-135-5000-S**	2.274	57.76	42.25	187.94	15.50	2.71
C1645-135-5250-M	1.645	41.78	0.135	3.43	5.250	133.35	1.957	49.71	1.445	36.70	55.74	247.96	16.93	2.96	**C1645-135-5250-S**	2.380	60.45	42.25	187.94	14.72	2.58
C1645-135-5500-M	1.645	41.78	0.135	3.43	5.500	139.70	2.042	51.86	1.503	38.18	55.74	247.96	16.12	2.82	**C1645-135-5500-S**	2.486	63.14	42.25	187.94	14.02	2.45
C1645-135-5750-M	1.645	41.78	0.135	3.43	5.750	146.05	2.126	54.01	1.561	39.66	55.74	247.96	15.38	2.69	**C1645-135-5750-S**	2.592	65.83	42.25	187.94	13.38	2.34
C1645-135-6000-M	1.645	41.78	0.135	3.43	6.000	152.40	2.211	56.16	1.620	41.14	55.74	247.96	14.71	2.57	**C1645-135-6000-S**	2.697	68.52	42.25	187.94	12.79	2.24
C1645-135-6250-M	1.645	41.78	0.135	3.43	6.250	158.75	2.296	58.31	1.678	42.62	55.74	247.96	14.10	2.47	**C1645-135-6250-S**	2.803	71.21	42.25	187.94	12.26	2.15
C1645-135-6500-M	1.645	41.78	0.135	3.43	6.500	165.10	2.381	60.46	1.736	44.10	55.74	247.96	13.53	2.37	**C1645-135-6500-S**	2.909	73.90	42.25	187.94	11.77	2.06
C1645-135-6750-M	1.645	41.78	0.135	3.43	6.750	171.45	2.465	62.62	1.795	45.58	55.74	247.96	13.01	2.28	**C1645-135-6750-S**	3.015	76.59	42.25	187.94	11.31	1.98
C1645-135-7000-M	1.645	41.78	0.135	3.43	7.000	177.80	2.550	64.77	1.853	47.06	55.74	247.96	12.53	2.19	**C1645-135-7000-S**	3.121	79.28	42.25	187.94	10.89	1.91
C1645-135-7500-M	1.645	41.78	0.135	3.43	7.500	190.50	2.719	69.07	1.969	50.02	55.74	247.96	11.66	2.04	**C1645-135-7500-S**	3.333	84.66	42.25	187.94	10.14	1.77
C1645-135-8000-M	1.645	41.78	0.135	3.43	8.000	203.20	2.889	73.37	2.086	52.98	55.74	247.96	10.91	1.91	**C1645-135-8000-S**	3.545	90.04	42.25	187.94	9.48	1.66
C1645-135-8500-M	1.645	41.78	0.135	3.43	8.500	215.90	3.058	77.67	2.203	55.95	55.74	247.96	10.24	1.79	**C1645-135-8500-S**	3.757	95.42	42.25	187.94	8.91	1.56
C1645-135-9000-M	1.645	41.78	0.135	3.43	9.000	228.60	3.227	81.98	2.319	58.91	55.74	247.96	9.66	1.69	**C1645-135-9000-S**	3.968	100.80	42.25	187.94	8.40	1.47
C1645-135-9500-M	1.645	41.78	0.135	3.43	9.500	241.30	3.397	86.28	2.436	61.87	55.74	247.96	9.13	1.60	**C1645-135-9500-S**	4.180	106.18	42.25	187.94	7.94	1.39
C1645-148-2625-M	1.645	41.78	0.148	3.76	2.625	66.68	1.169	29.68	0.957	24.31	71.99	320.22	49.43	8.65	**C1645-148-2625-S**	1.368	34.75	54.03	240.32	42.98	7.52
C1645-148-2750-M	1.645	41.78	0.148	3.76	2.750	69.85	1.215	30.87	0.992	25.19	71.99	320.22	46.91	8.21	**C1645-148-2750-S**	1.426	36.21	54.03	240.32	40.79	7.14
C1645-148-2875-M	1.645	41.78	0.148	3.76	2.875	73.03	1.262	32.06	1.027	26.07	71.99	320.22	44.64	7.81	**C1645-148-2875-S**	1.483	37.67	54.03	240.32	38.81	6.79
C1645-148-3000-M	1.645	41.78	0.148	3.76	3.000	76.20	1.309	33.25	1.061	26.96	71.99	320.22	42.57	7.45	**C1645-148-3000-S**	1.541	39.13	54.03	240.32	37.02	6.48
C1645-148-3250-M	1.645	41.78	0.148	3.76	3.250	82.55	1.403	35.63	1.131	28.72	71.99	320.22	38.97	6.82	**C1645-148-3250-S**	1.656	42.05	54.03	240.32	33.89	5.93

FOR INFORMATION ON ALTERNATIVE FINISHES, SEE PAGE 311

Part Numbers with an "*" are squared and not ground. **Part Numbers in bold** represent the newly expanded Associated Spring RAYMOND compression spring offering.

MUSIC WIRE															STAINLESS STEEL						
Catalog #	Outside Diameter (OD)		Wire Diameter (d)		Free Length (L) Approx		Load Length (L_1)		Solid Height (Sh) Approx		Load (P) at L_1		Spring Rate (R)		Catalog #	Load Length (L_1)		Load (P) at L_1		Spring Rate (R)	
	in	mm	in	mm	in	mm	in	mm	in	mm	lb	N	lb/in	N/mm		in	mm	lb	N	lb/in	N/mm
C1645-148-3500-M	1.645	41.78	0.148	3.76	3.500	88.90	1.496	38.01	1.200	30.48	71.99	320.22	35.93	6.29	**C1645-148-3500-S**	1.771	44.98	54.03	240.32	31.24	5.47
C1645-148-3750-M	1.645	41.78	0.148	3.76	3.750	95.25	1.590	40.39	1.269	32.24	71.99	320.22	33.33	5.83	**C1645-148-3750-S**	1.886	47.90	54.03	240.32	28.98	5.07
C1645-148-4000-M	1.645	41.78	0.148	3.76	4.000	101.60	1.684	42.77	1.339	34.00	71.99	320.22	31.08	5.44	**C1645-148-4000-S**	2.001	50.82	54.03	240.32	27.03	4.73
C1645-148-4250-M	1.645	41.78	0.148	3.76	4.250	107.95	1.777	45.15	1.408	35.77	71.99	320.22	29.11	5.09	**C1645-148-4250-S**	2.116	53.75	54.03	240.32	25.32	4.43
C1645-148-4500-M	1.645	41.78	0.148	3.76	4.500	114.30	1.871	47.53	1.478	37.53	71.99	320.22	27.38	4.79	**C1645-148-4500-S**	2.231	56.67	54.03	240.32	23.81	4.17
C1645-148-4750-M	1.645	41.78	0.148	3.76	4.750	120.65	1.965	49.90	1.547	39.29	71.99	320.22	25.85	4.52	**C1645-148-4750-S**	2.346	59.59	54.03	240.32	22.48	3.93
C1645-148-5000-M	1.645	41.78	0.148	3.76	5.000	127.00	2.058	52.28	1.616	41.05	71.99	320.22	24.47	4.28	**C1645-148-5000-S**	2.461	62.52	54.03	240.32	21.28	3.72
C1645-148-5250-M	1.645	41.78	0.148	3.76	5.250	133.35	2.152	54.66	1.686	42.82	71.99	320.22	23.24	4.07	**C1645-148-5250-S**	2.576	65.44	54.03	240.32	20.21	3.54
C1645-148-5500-M	1.645	41.78	0.148	3.76	5.500	139.70	2.246	57.04	1.755	44.58	71.99	320.22	22.12	3.87	**C1645-148-5500-S**	2.691	68.36	54.03	240.32	19.24	3.37
C1645-148-5750-M	1.645	41.78	0.148	3.76	5.750	146.05	2.339	59.42	1.824	46.34	71.99	320.22	21.11	3.69	**C1645-148-5750-S**	2.806	71.28	54.03	240.32	18.35	3.21
C1645-148-6000-M	1.645	41.78	0.148	3.76	6.000	152.40	2.433	61.80	1.894	48.10	71.99	320.22	20.18	3.53	**C1645-148-6000-S**	2.922	74.21	54.03	240.32	17.55	3.07
C1645-148-6250-M	1.645	41.78	0.148	3.76	6.250	158.75	2.527	64.18	1.963	49.86	71.99	320.22	19.34	3.38	**C1645-148-6250-S**	3.037	77.13	54.03	240.32	16.81	2.94
C1645-148-6500-M	1.645	41.78	0.148	3.76	6.500	165.10	2.620	66.56	2.033	51.63	71.99	320.22	18.56	3.25	**C1645-148-6500-S**	3.152	80.05	54.03	240.32	16.14	2.82
C1645-148-6750-M	1.645	41.78	0.148	3.76	6.750	171.45	2.714	68.94	2.102	53.39	71.99	320.22	17.84	3.12	**C1645-148-6750-S**	3.267	82.98	54.03	240.32	15.51	2.71
C1645-148-7000-M	1.645	41.78	0.148	3.76	7.000	177.80	2.808	71.32	2.171	55.15	71.99	320.22	17.17	3.00	**C1645-148-7000-S**	3.382	85.90	54.03	240.32	14.93	2.61
C1645-148-7500-M*	1.645	41.78	0.148	3.76	7.500	190.50	3.088	78.43	2.424	61.58	71.99	320.22	16.32	2.86	**C1645-148-7500-S***	3.692	93.77	54.03	240.32	14.19	2.48
C1645-148-8000-M*	1.645	41.78	0.148	3.76	8.000	203.20	3.275	83.18	2.563	65.10	71.99	320.22	15.24	2.67	**C1645-148-8000-S***	3.922	99.62	54.03	240.32	13.25	2.32
C1645-148-8500-M*	1.645	41.78	0.148	3.76	8.500	215.90	3.462	87.94	2.702	68.63	71.99	320.22	14.29	2.50	**C1645-148-8500-S***	4.152	105.46	54.03	240.32	12.43	2.17
C1645-148-9000-M*	1.645	41.78	0.148	3.76	9.000	228.60	3.650	92.70	2.841	72.15	71.99	320.22	13.46	2.35	**C1645-148-9000-S***	4.382	111.31	54.03	240.32	11.70	2.05
C1645-148-9500-M*	1.645	41.78	0.148	3.76	9.500	241.30	3.837	97.46	2.979	75.68	71.99	320.22	12.71	2.22	**C1645-148-9500-S***	4.612	117.16	54.03	240.32	11.05	1.93
C1645-162-2500-M	1.645	41.78	0.162	4.12	2.500	63.50	1.226	31.14	1.051	26.70	92.52	411.53	72.62	12.71	**C1645-162-2500-S**	1.412	35.87	68.69	305.55	63.15	11.05
C1645-162-2625-M	1.645	41.78	0.162	4.12	2.625	66.68	1.278	32.46	1.092	27.74	92.52	411.53	68.67	12.02	**C1645-162-2625-S**	1.475	37.46	68.69	305.55	59.72	10.45
C1645-162-2750-M	1.645	41.78	0.162	4.12	2.750	69.85	1.330	33.77	1.133	28.78	92.52	411.53	65.14	11.40	**C1645-162-2750-S**	1.537	39.05	68.69	305.55	56.64	9.91
C1645-162-2875-M	1.645	41.78	0.162	4.12	2.875	73.03	1.381	35.09	1.174	29.81	92.52	411.53	61.94	10.84	**C1645-162-2875-S**	1.600	40.63	68.69	305.55	53.87	9.43
C1645-162-3000-M	1.645	41.78	0.162	4.12	3.000	76.20	1.433	36.41	1.215	30.85	92.52	411.53	59.05	10.33	**C1645-162-3000-S**	1.662	42.22	68.69	305.55	51.35	8.99
C1645-162-3250-M	1.645	41.78	0.162	4.12	3.250	82.55	1.537	39.04	1.296	32.93	92.52	411.53	54.01	9.45	**C1645-162-3250-S**	1.787	45.40	68.69	305.55	46.96	8.22
C1645-162-3500-M	1.645	41.78	0.162	4.12	3.500	88.90	1.641	41.67	1.378	35.00	92.52	411.53	49.75	8.71	**C1645-162-3500-S**	1.912	48.57	68.69	305.55	43.27	7.57
C1645-162-3750-M	1.645	41.78	0.162	4.12	3.750	95.25	1.744	44.30	1.460	37.08	92.52	411.53	46.12	8.07	**C1645-162-3750-S**	2.037	51.75	68.69	305.55	40.11	7.02
C1645-162-4000-M	1.645	41.78	0.162	4.12	4.000	101.60	1.848	46.93	1.541	39.15	92.52	411.53	42.99	7.52	**C1645-162-4000-S**	2.162	54.92	68.69	305.55	37.38	6.54
C1645-162-4250-M	1.645	41.78	0.162	4.12	4.250	107.95	1.951	49.57	1.623	41.23	92.52	411.53	40.25	7.04	**C1645-162-4250-S**	2.287	58.10	68.69	305.55	35.00	6.13
C1645-162-4500-M	1.645	41.78	0.162	4.12	4.500	114.30	2.055	52.20	1.705	43.30	92.52	411.53	37.84	6.62	**C1645-162-4500-S**	2.412	61.28	68.69	305.55	32.90	5.76
C1645-162-4750-M	1.645	41.78	0.162	4.12	4.750	120.65	2.159	54.83	1.786	45.38	92.52	411.53	35.70	6.25	**C1645-162-4750-S**	2.537	64.45	68.69	305.55	31.05	5.43
C1645-162-5000-M	1.645	41.78	0.162	4.12	5.000	127.00	2.262	57.46	1.868	47.45	92.52	411.53	33.79	5.91	**C1645-162-5000-S**	2.662	67.63	68.69	305.55	29.39	5.14
C1645-162-5250-M	1.645	41.78	0.162	4.12	5.250	133.35	2.366	60.10	1.950	49.53	92.52	411.53	32.08	5.61	**C1645-162-5250-S**	2.787	70.80	68.69	305.55	27.90	4.88
C1645-162-5500-M	1.645	41.78	0.162	4.12	5.500	139.70	2.470	62.73	2.032	51.60	92.52	411.53	30.53	5.34	**C1645-162-5500-S**	2.913	73.98	68.69	305.55	26.55	4.65
C1645-162-5750-M	1.645	41.78	0.162	4.12	5.750	146.05	2.573	65.36	2.113	53.68	92.52	411.53	29.12	5.10	**C1645-162-5750-S**	3.038	77.15	68.69	305.55	25.32	4.43
C1645-162-6000-M	1.645	41.78	0.162	4.12	6.000	152.40	2.677	67.99	2.195	55.75	92.52	411.53	27.84	4.87	**C1645-162-6000-S**	3.163	80.33	68.69	305.55	24.21	4.24
C1645-162-6250-M	1.645	41.78	0.162	4.12	6.250	158.75	2.780	70.62	2.277	57.83	92.52	411.53	26.67	4.67	**C1645-162-6250-S**	3.288	83.50	68.69	305.55	23.19	4.06
C1645-162-6500-M	1.645	41.78	0.162	4.12	6.500	165.10	2.884	73.26	2.358	59.90	92.52	411.53	25.59	4.48	**C1645-162-6500-S**	3.413	86.68	68.69	305.55	22.25	3.89
C1645-162-6750-M*	1.645	41.78	0.162	4.12	6.750	171.45	3.083	78.30	2.557	64.95	92.52	411.53	25.23	4.41	**C1645-162-6750-S***	3.619	91.91	68.69	305.55	21.94	3.84
C1645-162-7000-M*	1.645	41.78	0.162	4.12	7.000	177.80	3.186	80.93	2.639	67.03	92.52	411.53	24.26	4.25	**C1645-162-7000-S***	3.744	95.09	68.69	305.55	21.09	3.69
C1645-162-7500-M*	1.645	41.78	0.162	4.12	7.500	190.50	3.393	86.19	2.802	71.18	92.52	411.53	22.53	3.94	**C1645-162-7500-S***	3.994	101.44	68.69	305.55	19.59	3.43
C1645-162-8000-M*	1.645	41.78	0.162	4.12	8.000	203.20	3.601	91.46	2.966	75.33	92.52	411.53	21.03	3.68	**C1645-162-8000-S***	4.244	107.79	68.69	305.55	18.29	3.20
C1645-162-8500-M*	1.645	41.78	0.162	4.12	8.500	215.90	3.808	96.72	3.129	79.48	92.52	411.53	19.72	3.45	**C1645-162-8500-S***	4.494	114.14	68.69	305.55	17.15	3.00
C1645-162-9000-M*	1.645	41.78	0.162	4.12	9.000	228.60	4.015	101.99	3.292	83.63	92.52	411.53	18.56	3.25	**C1645-162-9000-S***	4.744	120.49	68.69	305.55	16.14	2.82
C1645-162-9500-M*	1.645	41.78	0.162	4.12	9.500	241.30	4.223	107.25	3.456	87.78	92.52	411.53	17.53	3.07	**C1645-162-9500-S***	4.994	126.85	68.69	305.55	15.24	2.67
C1645-177-2375-M	1.645	41.78	0.177	4.50	2.375	60.33	1.279	32.49	1.140	28.96	118.23	525.92	107.88	18.88	**C1645-177-2375-S**	1.450	36.83	86.78	385.99	93.81	16.42
C1645-177-2500-M	1.645	41.78	0.177	4.50	2.500	63.50	1.336	33.94	1.188	30.16	118.23	525.92	101.60	17.78	**C1645-177-2500-S**	1.518	38.55	86.78	385.99	88.35	15.46
C1645-177-2625-M	1.645	41.78	0.177	4.50	2.625	66.68	1.394	35.40	1.235	31.37	118.23	525.92	96.01	16.80	**C1645-177-2625-S**	1.586	40.27	86.78	385.99	83.49	14.61
C1645-177-2750-M	1.645	41.78	0.177	4.50	2.750	69.85	1.451	36.85	1.283	32.58	118.23	525.92	91.00	15.92	**C1645-177-2750-S**	1.653	42.00	86.78	385.99	79.13	13.85
C1645-177-2875-M	1.645	41.78	0.177	4.50	2.875	73.03	1.508	38.30	1.330	33.78	118.23	525.92	86.49	15.14	**C1645-177-2875-S**	1.721	43.72	86.78	385.99	75.21	13.16
C1645-177-3000-M	1.645	41.78	0.177	4.50	3.000	76.20	1.565	39.76	1.378	34.99	118.23	525.92	82.40	14.42	**C1645-177-3000-S**	1.789	45.44	86.78	385.99	71.65	12.54
C1645-177-3250-M	1.645	41.78	0.177	4.50	3.250	82.55	1.680	42.66	1.473	37.40	118.23	525.92	75.29	13.18	**C1645-177-3250-S**	1.925	48.88	86.78	385.99	65.47	11.46
C1645-177-3500-M	1.645	41.78	0.177	4.50	3.500	88.90	1.794	45.57	1.568	39.82	118.23	525.92	69.31	12.13	**C1645-177-3500-S**	2.060	52.33	86.78	385.99	60.27	10.55
C1645-177-3750-M	1.645	41.78	0.177	4.50	3.750	95.25	1.908	48.48	1.663	42.23	118.23	525.92	64.20	11.24	**C1645-177-3750-S**	2.196	55.77	86.78	385.99	55.83	9.77
C1645-177-4000-M	1.645	41.78	0.177	4.50	4.000	101.60	2.023	51.38	1.758	44.65	118.23	525.92	59.80	10.47	**C1645-177-4000-S**	2.331	59.21	86.78	385.99	52.00	9.10
C1645-177-4250-M	1.645	41.78	0.177	4.50	4.250	107.95	2.137	54.29	1.853	47.06	118.23	525.92	55.96	9.79	**C1645-177-4250-S**	2.467	62.66	86.78	385.99	48.66	8.52
C1645-177-4500-M	1.645	41.78	0.177	4.50	4.500	114.30	2.252	57.20	1.948	49.47	118.23	525.92	52.59	9.20	**C1645-177-4500-S**	2.602	66.10	86.78	385.99	45.73	8.00
C1645-177-4750-M	1.645	41.78	0.177	4.50	4.750	120.65	2.366	60.10	2.043	51.89	118.23	525.92	49.60	8.68	**C1645-177-4750-S**	2.738	69.55	86.78	385.99	43.13	7.55
C1645-177-5000-M	1.645	41.78	0.177	4.50	5.000	127.00	2.481	63.01	2.138	54.30	118.23	525.92	46.93	8.21	**C1645-177-5000-S**	2.874	72.99	86.78	385.99	40.81	7.14
C1645-177-5250-M	1.645	41.78	0.177	4.50	5.250	133.35	2.595	65.92	2.233	56.72	118.23	525.92	44.53	7.79	**C1645-177-5250-S**	3.009	76.43	86.78	385.99	38.73	6.78
C1645-177-5500-M	1.645	41.78	0.177	4.50	5.500	139.70	2.710	68.82	2.328	59.13	118.23	525.92	42.37	7.41	**C1645-177-5500-S**	3.145	79.88	86.78	385.99	36.84	6.45
C1645-177-5750-M	1.645	41.78	0.177	4.50	5.750	146.05	2.824	71.73	2.423	61.54	118.23	525.92	40.41	7.07	**C1645-177-5750-S**	3.280	83.32	86.78	385.99	35.14	6.15
C1645-177-6000-M	1.645	41.78	0.177	4.50	6.000	152.40	2.938	74.64	2.518	63.96	118.23	525.92	38.62	6.76	**C1645-177-6000-S**	3.416	86.76	86.78	385.99	33.58	5.88

Part Numbers with an "*" are squared and not ground. **Part Numbers in bold** represent the newly expanded Associated Spring RAYMOND compression spring offering.

MUSIC WIRE														
Catalog #	Outside Diameter (OD)		Wire Diameter (d)		Free Length (L) Approx		Load Length (L_1)		Solid Height (Sh) Approx		Load (P) at L_1		Spring Rate (R)	
	in	mm	in	mm	in	mm	in	mm	in	mm	lb	N	lb/in	N/mm
C1645-177-6250-M	1.645	41.78	0.177	4.50	6.250	158.75	3.053	77.54	2.613	66.37	118.23	525.92	36.98	6.47
C1645-177-6500-M	1.645	41.78	0.177	4.50	6.500	165.10	3.167	80.45	2.708	68.79	118.23	525.92	35.48	6.21
C1645-177-6750-M	1.645	41.78	0.177	4.50	6.750	171.45	3.282	83.36	2.803	71.20	118.23	525.92	34.09	5.97
C1645-177-7000-M	1.645	41.78	0.177	4.50	7.000	177.80	3.396	86.26	2.898	73.61	118.23	525.92	32.81	5.74
C1645-177-7500-M*	1.645	41.78	0.177	4.50	7.500	190.50	3.721	94.51	3.207	81.45	118.23	525.92	31.29	5.48
C1645-177-8000-M*	1.645	41.78	0.177	4.50	8.000	203.20	3.950	100.33	3.397	86.28	118.23	525.92	29.19	5.11
C1645-177-8500-M*	1.645	41.78	0.177	4.50	8.500	215.90	4.179	106.14	3.587	91.11	118.23	525.92	27.36	4.79
C1645-177-9000-M*	1.645	41.78	0.177	4.50	9.000	228.60	4.408	111.95	3.777	95.94	118.23	525.92	25.75	4.51
C1645-177-9500-M*	1.645	41.78	0.177	4.50	9.500	241.30	4.637	117.77	3.967	100.77	118.23	525.92	24.31	4.25
C1645-192-2250-M	1.645	41.78	0.192	4.88	2.250	57.15	1.318	33.48	1.211	30.77	148.02	658.43	158.85	27.80
C1645-192-2375-M	1.645	41.78	0.192	4.88	2.375	60.33	1.381	35.07	1.266	32.14	148.02	658.43	148.88	26.05
C1645-192-2500-M	1.645	41.78	0.192	4.88	2.500	63.50	1.443	36.66	1.320	33.52	148.02	658.43	140.08	24.51
C1645-192-2625-M	1.645	41.78	0.192	4.88	2.625	66.68	1.506	38.25	1.374	34.90	148.02	658.43	132.27	23.15
C1645-192-2750-M	1.645	41.78	0.192	4.88	2.750	69.85	1.568	39.84	1.428	36.27	148.02	658.43	125.28	21.92
C1645-192-2875-M	1.645	41.78	0.192	4.88	2.875	73.03	1.631	41.43	1.482	37.65	148.02	658.43	118.99	20.82
C1645-192-3000-M	1.645	41.78	0.192	4.88	3.000	76.20	1.694	43.02	1.536	39.02	148.02	658.43	113.31	19.83
C1645-192-3250-M	1.645	41.78	0.192	4.88	3.250	82.55	1.819	46.20	1.645	41.77	148.02	658.43	103.42	18.10
C1645-192-3500-M	1.645	41.78	0.192	4.88	3.500	88.90	1.944	49.38	1.753	44.52	148.02	658.43	95.13	16.65
C1645-192-3750-M	1.645	41.78	0.192	4.88	3.750	95.25	2.069	52.56	1.861	47.27	148.02	658.43	88.06	15.41
C1645-192-4000-M	1.645	41.78	0.192	4.88	4.000	101.60	2.194	55.73	1.969	50.02	148.02	658.43	81.97	14.35
C1645-192-4250-M	1.645	41.78	0.192	4.88	4.250	107.95	2.319	58.91	2.078	52.77	148.02	658.43	76.67	13.42
C1645-192-4500-M	1.645	41.78	0.192	4.88	4.500	114.30	2.445	62.09	2.186	55.52	148.02	658.43	72.01	12.60
C1645-192-4750-M	1.645	41.78	0.192	4.88	4.750	120.65	2.570	65.27	2.294	58.27	148.02	658.43	67.89	11.88
C1645-192-5000-M	1.645	41.78	0.192	4.88	5.000	127.00	2.695	68.45	2.403	61.02	148.02	658.43	64.21	11.24
C1645-192-5250-M	1.645	41.78	0.192	4.88	5.250	133.35	2.820	71.63	2.511	63.77	148.02	658.43	60.92	10.66
C1645-192-5500-M	1.645	41.78	0.192	4.88	5.500	139.70	2.945	74.81	2.619	66.52	148.02	658.43	57.94	10.14
C1645-192-5750-M	1.645	41.78	0.192	4.88	5.750	146.05	3.070	77.99	2.727	69.27	148.02	658.43	55.24	9.67
C1645-192-6000-M	1.645	41.78	0.192	4.88	6.000	152.40	3.196	81.17	2.836	72.02	148.02	658.43	52.78	9.24
C1645-192-6250-M	1.645	41.78	0.192	4.88	6.250	158.75	3.321	84.34	2.944	74.78	148.02	658.43	50.53	8.84
C1645-192-6500-M	1.645	41.78	0.192	4.88	6.500	165.10	3.446	87.52	3.052	77.53	148.02	658.43	48.47	8.48
C1645-192-6750-M	1.645	41.78	0.192	4.88	6.750	171.45	3.571	90.70	3.160	80.28	148.02	658.43	46.56	8.15
C1645-192-7000-M	1.645	41.78	0.192	4.88	7.000	177.80	3.696	93.88	3.269	83.03	148.02	658.43	44.80	7.84
C1645-192-7500-M	1.645	41.78	0.192	4.88	7.500	190.50	3.946	100.24	3.485	88.53	148.02	658.43	41.65	7.29
C1645-192-8000-M	1.645	41.78	0.192	4.88	8.000	203.20	4.197	106.60	3.702	94.03	148.02	658.43	38.92	6.81
C1645-192-8500-M	1.645	41.78	0.192	4.88	8.500	215.90	4.447	112.96	3.918	99.53	148.02	658.43	36.52	6.39
C1645-192-9000-M	1.645	41.78	0.192	4.88	9.000	228.60	4.697	119.31	4.135	105.03	148.02	658.43	34.40	6.02
C1645-192-9500-M	1.645	41.78	0.192	4.88	9.500	241.30	4.948	125.67	4.352	110.53	148.02	658.43	32.52	5.69
C1645-207-2250-M	1.645	41.78	0.207	5.26	2.250	57.15	1.410	35.81	1.325	33.65	182.10	810.04	216.76	37.93
C1645-207-2375-M	1.645	41.78	0.207	5.26	2.375	60.33	1.478	37.53	1.385	35.19	182.10	810.04	202.94	35.52
C1645-207-2500-M	1.645	41.78	0.207	5.26	2.500	63.50	1.545	39.26	1.446	36.73	182.10	810.04	190.78	33.39
C1645-207-2625-M	1.645	41.78	0.207	5.26	2.625	66.68	1.613	40.98	1.506	38.26	182.10	810.04	180.00	31.50
C1645-207-2750-M	1.645	41.78	0.207	5.26	2.750	69.85	1.681	42.70	1.567	39.80	182.10	810.04	170.36	29.81
C1645-207-2875-M	1.645	41.78	0.207	5.26	2.875	73.03	1.749	44.42	1.628	41.34	182.10	810.04	161.71	28.30
C1645-207-3000-M	1.645	41.78	0.207	5.26	3.000	76.20	1.817	46.14	1.688	42.88	182.10	810.04	153.90	26.93
C1645-207-3250-M	1.645	41.78	0.207	5.26	3.250	82.55	1.952	49.59	1.809	45.96	182.10	810.04	140.33	24.56
C1645-207-3500-M	1.645	41.78	0.207	5.26	3.500	88.90	2.088	53.03	1.931	49.04	182.10	810.04	128.96	22.57
C1645-207-3750-M	1.645	41.78	0.207	5.26	3.750	95.25	2.224	56.48	2.052	52.12	182.10	810.04	119.30	20.88
C1645-207-4000-M	1.645	41.78	0.207	5.26	4.000	101.60	2.359	59.92	2.173	55.19	182.10	810.04	110.98	19.42
C1645-207-4250-M	1.645	41.78	0.207	5.26	4.250	107.95	2.495	63.37	2.294	58.27	182.10	810.04	103.75	18.16
C1645-207-4500-M	1.645	41.78	0.207	5.26	4.500	114.30	2.630	66.81	2.415	61.35	182.10	810.04	97.40	17.04
C1645-207-4750-M	1.645	41.78	0.207	5.26	4.750	120.65	2.766	70.25	2.537	64.43	182.10	810.04	91.78	16.06
C1645-207-5000-M	1.645	41.78	0.207	5.26	5.000	127.00	2.902	73.70	2.658	67.51	182.10	810.04	86.78	15.19
C1645-207-5250-M	1.645	41.78	0.207	5.26	5.250	133.35	3.037	77.14	2.779	70.59	182.10	810.04	82.29	14.40
C1645-207-5500-M	1.645	41.78	0.207	5.26	5.500	139.70	3.173	80.59	2.900	73.66	182.10	810.04	78.25	13.69
C1645-207-5750-M	1.645	41.78	0.207	5.26	5.750	146.05	3.308	84.03	3.021	76.74	182.10	810.04	74.58	13.05
C1645-207-6000-M	1.645	41.78	0.207	5.26	6.000	152.40	3.444	87.48	3.143	79.82	182.10	810.04	71.24	12.47
C1645-207-6250-M	1.645	41.78	0.207	5.26	6.250	158.75	3.580	90.92	3.264	82.90	182.10	810.04	68.19	11.93
C1645-207-6500-M	1.645	41.78	0.207	5.26	6.500	165.10	3.715	94.37	3.385	85.98	182.10	810.04	65.39	11.44
C1645-207-6750-M	1.645	41.78	0.207	5.26	6.750	171.45	3.851	97.81	3.506	89.05	182.10	810.04	62.81	10.99
C1645-207-7000-M	1.645	41.78	0.207	5.26	7.000	177.80	3.986	101.25	3.627	92.13	182.10	810.04	60.43	10.57
C1645-207-7500-M	1.645	41.78	0.207	5.26	7.500	190.50	4.258	108.14	3.870	98.29	182.10	810.04	56.16	9.83
C1645-207-8000-M	1.645	41.78	0.207	5.26	8.000	203.20	4.529	115.03	4.112	104.45	182.10	810.04	52.46	9.18
C1645-207-8500-M	1.645	41.78	0.207	5.26	8.500	215.90	4.800	121.92	4.354	110.60	182.10	810.04	49.22	8.61
C1645-207-9000-M	1.645	41.78	0.207	5.26	9.000	228.60	5.071	128.81	4.597	116.76	182.10	810.04	46.35	8.11

STAINLESS STEEL						
Catalog #	Load Length (L_1)		Load (P) at L_1		Spring Rate (R)	
	in	mm	lb	N	lb/in	N/mm
C1645-177-6250-S	3.551	90.21	86.78	385.99	32.16	5.63
C1645-177-6500-S	3.687	93.65	86.78	385.99	30.85	5.40
C1645-177-6750-S	3.823	97.10	86.78	385.99	29.64	5.19
C1645-177-7000-S	3.958	100.54	86.78	385.99	28.53	4.99
C1645-177-7500-S*	4.310	109.48	86.78	385.99	27.21	4.76
C1645-177-8000-S*	4.582	116.37	86.78	385.99	25.38	4.44
C1645-177-8500-S*	4.853	123.26	86.78	385.99	23.79	4.16
C1645-177-9000-S*	5.124	130.15	86.78	385.99	22.39	3.92
C1645-177-9500-S*	5.395	137.03	86.78	385.99	21.14	3.70
C1645-192-2250-S	1.472	37.40	107.40	477.72	138.13	24.17
C1645-192-2375-S	1.545	39.25	107.40	477.72	129.46	22.65
C1645-192-2500-S	1.618	41.11	107.40	477.72	121.81	21.32
C1645-192-2625-S	1.691	42.96	107.40	477.72	115.02	20.13
C1645-192-2750-S	1.764	44.81	107.40	477.72	108.94	19.06
C1645-192-2875-S	1.837	46.66	107.40	477.72	103.47	18.11
C1645-192-3000-S	1.910	48.51	107.40	477.72	98.53	17.24
C1645-192-3250-S	2.056	52.22	107.40	477.72	89.93	15.74
C1645-192-3500-S	2.202	55.92	107.40	477.72	82.72	14.48
C1645-192-3750-S	2.347	59.63	107.40	477.72	76.57	13.40
C1645-192-4000-S	2.493	63.33	107.40	477.72	71.28	12.47
C1645-192-4250-S	2.639	67.03	107.40	477.72	66.67	11.67
C1645-192-4500-S	2.785	70.74	107.40	477.72	62.62	10.96
C1645-192-4750-S	2.931	74.44	107.40	477.72	59.04	10.33
C1645-192-5000-S	3.077	78.15	107.40	477.72	55.84	9.77
C1645-192-5250-S	3.222	81.85	107.40	477.72	52.97	9.27
C1645-192-5500-S	3.368	85.55	107.40	477.72	50.38	8.82
C1645-192-5750-S	3.514	89.26	107.40	477.72	48.03	8.41
C1645-192-6000-S	3.660	92.96	107.40	477.72	45.90	8.03
C1645-192-6250-S	3.806	96.67	107.40	477.72	43.94	7.69
C1645-192-6500-S	3.952	100.37	107.40	477.72	42.14	7.38
C1645-192-6750-S	4.097	104.08	107.40	477.72	40.49	7.09
C1645-192-7000-S	4.243	107.78	107.40	477.72	38.96	6.82
C1645-192-7500-S	4.535	115.19	107.40	477.72	36.22	6.34
C1645-192-8000-S	4.827	122.60	107.40	477.72	33.84	5.92
C1645-192-8500-S	5.118	130.00	107.40	477.72	31.76	5.56
C1645-192-9000-S	5.410	137.41	107.40	477.72	29.92	5.24
C1645-192-9500-S	5.702	144.82	107.40	477.72	28.27	4.95
C1645-207-2250-S	1.557	39.55	130.63	581.05	188.49	32.99
C1645-207-2375-S	1.635	41.52	130.63	581.05	176.47	30.88
C1645-207-2500-S	1.713	43.50	130.63	581.05	165.90	29.03
C1645-207-2625-S	1.790	45.48	130.63	581.05	156.52	27.39
C1645-207-2750-S	1.868	47.45	130.63	581.05	148.14	25.93
C1645-207-2875-S	1.946	49.43	130.63	581.05	140.62	24.61
C1645-207-3000-S	2.024	51.41	130.63	581.05	133.82	23.42
C1645-207-3250-S	2.180	55.36	130.63	581.05	122.03	21.35
C1645-207-3500-S	2.335	59.31	130.63	581.05	112.14	19.62
C1645-207-3750-S	2.491	63.27	130.63	581.05	103.74	18.15
C1645-207-4000-S	2.646	67.22	130.63	581.05	96.50	16.89
C1645-207-4250-S	2.802	71.17	130.63	581.05	90.21	15.79
C1645-207-4500-S	2.958	75.13	130.63	581.05	84.70	14.82
C1645-207-4750-S	3.113	79.08	130.63	581.05	79.81	13.97
C1645-207-5000-S	3.269	83.03	130.63	581.05	75.46	13.21
C1645-207-5250-S	3.425	86.98	130.63	581.05	71.56	12.52
C1645-207-5500-S	3.580	90.94	130.63	581.05	68.04	11.91
C1645-207-5750-S	3.736	94.89	130.63	581.05	64.85	11.35
C1645-207-6000-S	3.891	98.84	130.63	581.05	61.95	10.84
C1645-207-6250-S	4.047	102.80	130.63	581.05	59.30	10.38
C1645-207-6500-S	4.203	106.75	130.63	581.05	56.86	9.95
C1645-207-6750-S	4.358	110.70	130.63	581.05	54.62	9.56
C1645-207-7000-S	4.514	114.66	130.63	581.05	52.55	9.20
C1645-207-7500-S	4.825	122.56	130.63	581.05	48.84	8.55
C1645-207-8000-S	5.137	130.47	130.63	581.05	45.62	7.98
C1645-207-8500-S	5.448	138.37	130.63	581.05	42.80	7.49
C1645-207-9000-S	5.759	146.28	130.63	581.05	40.31	7.05

FOR INFORMATION ON ALTERNATIVE FINISHES, SEE PAGE 311

Part Numbers with an "*" are squared and not ground. **Part Numbers in bold** represent the newly expanded Associated Spring RAYMOND compression spring offering.

MUSIC WIRE															STAINLESS STEEL						
Catalog #	Outside Diameter (OD)		Wire Diameter (d)		Free Length (L) Approx		Load Length (L_1)		Solid Height (Sh) Approx		Load (P) at L_1		Spring Rate (R)		Catalog #	Load Length (L_1)		Load (P) at L_1		Spring Rate (R)	
	in	mm	in	mm	in	mm	in	mm	in	mm	lb	N	lb/in	N/mm		in	mm	lb	N	lb/in	N/mm
C1645-207-9500-M	**1.645**	**41.78**	**0.207**	**5.26**	**9.500**	**241.30**	**5.342**	**135.70**	**4.839**	**122.91**	**182.10**	**810.04**	**43.80**	**7.67**	**C1645-207-9500-S**	**6.070**	**154.19**	**130.63**	**581.05**	**38.09**	**6.67**
C1645-225-2250-M	**1.645**	**41.78**	**0.225**	**5.72**	**2.250**	**57.15**	**1.513**	**38.42**	**1.452**	**36.87**	**228.95**	**1018.44**	**310.48**	**54.33**	**C1645-225-2250-S**	**1.650**	**41.91**	**162.02**	**720.71**	**269.98**	**47.25**
C1645-225-2375-M	**1.645**	**41.78**	**0.225**	**5.72**	**2.375**	**60.33**	**1.586**	**40.29**	**1.520**	**38.60**	**228.95**	**1018.44**	**290.32**	**50.81**	**C1645-225-2375-S**	**1.733**	**44.02**	**162.02**	**720.71**	**252.45**	**44.18**
C1645-225-2500-M	**1.645**	**41.78**	**0.225**	**5.72**	**2.500**	**63.50**	**1.660**	**42.17**	**1.588**	**40.32**	**228.95**	**1018.44**	**272.62**	**47.71**	**C1645-225-2500-S**	**1.817**	**46.14**	**162.02**	**720.71**	**237.06**	**41.49**
C1645-225-2625-M	**1.645**	**41.78**	**0.225**	**5.72**	**2.625**	**66.68**	**1.734**	**44.04**	**1.656**	**42.05**	**228.95**	**1018.44**	**256.95**	**44.97**	**C1645-225-2625-S**	**1.900**	**48.26**	**162.02**	**720.71**	**223.43**	**39.10**
C1645-225-2750-M	**1.645**	**41.78**	**0.225**	**5.72**	**2.750**	**69.85**	**1.808**	**45.92**	**1.724**	**43.78**	**228.95**	**1018.44**	**242.98**	**42.52**	**C1645-225-2750-S**	**1.983**	**50.37**	**162.02**	**720.71**	**211.29**	**36.98**
C1645-225-2875-M	**1.645**	**41.78**	**0.225**	**5.72**	**2.875**	**73.03**	**1.882**	**47.79**	**1.792**	**45.50**	**228.95**	**1018.44**	**230.46**	**40.33**	**C1645-225-2875-S**	**2.067**	**52.49**	**162.02**	**720.71**	**200.40**	**35.07**
C1645-225-3000-M	**1.645**	**41.78**	**0.225**	**5.72**	**3.000**	**76.20**	**1.955**	**49.67**	**1.860**	**47.23**	**228.95**	**1018.44**	**219.16**	**38.35**	**C1645-225-3000-S**	**2.150**	**54.61**	**162.02**	**720.71**	**190.58**	**33.35**
C1645-225-3250-M	**1.645**	**41.78**	**0.225**	**5.72**	**3.250**	**82.55**	**2.103**	**53.41**	**1.995**	**50.69**	**228.95**	**1018.44**	**199.59**	**34.93**	**C1645-225-3250-S**	**2.316**	**58.84**	**162.02**	**720.71**	**173.56**	**30.37**
C1645-225-3500-M	**1.645**	**41.78**	**0.225**	**5.72**	**3.500**	**88.90**	**2.250**	**57.16**	**2.131**	**54.14**	**228.95**	**1018.44**	**183.23**	**32.07**	**C1645-225-3500-S**	**2.483**	**63.07**	**162.02**	**720.71**	**159.33**	**27.88**
C1645-225-3750-M	**1.645**	**41.78**	**0.225**	**5.72**	**3.750**	**95.25**	**2.398**	**60.91**	**2.267**	**57.59**	**228.95**	**1018.44**	**169.35**	**29.64**	**C1645-225-3750-S**	**2.650**	**67.30**	**162.02**	**720.71**	**147.26**	**25.77**
C1645-225-4000-M	**1.645**	**41.78**	**0.225**	**5.72**	**4.000**	**101.60**	**2.546**	**64.66**	**2.403**	**61.05**	**228.95**	**1018.44**	**157.43**	**27.55**	**C1645-225-4000-S**	**2.816**	**71.54**	**162.02**	**720.71**	**136.89**	**23.96**
C1645-225-4250-M	**1.645**	**41.78**	**0.225**	**5.72**	**4.250**	**107.95**	**2.693**	**68.41**	**2.539**	**64.50**	**228.95**	**1018.44**	**147.07**	**25.74**	**C1645-225-4250-S**	**2.983**	**75.77**	**162.02**	**720.71**	**127.89**	**22.38**
C1645-225-4500-M	**1.645**	**41.78**	**0.225**	**5.72**	**4.500**	**114.30**	**2.841**	**72.16**	**2.675**	**67.96**	**228.95**	**1018.44**	**137.99**	**24.15**	**C1645-225-4500-S**	**3.150**	**80.00**	**162.02**	**720.71**	**119.99**	**21.00**
C1645-225-4750-M	**1.645**	**41.78**	**0.225**	**5.72**	**4.750**	**120.65**	**2.988**	**75.90**	**2.811**	**71.41**	**228.95**	**1018.44**	**129.97**	**22.74**	**C1645-225-4750-S**	**3.316**	**84.24**	**162.02**	**720.71**	**113.02**	**19.78**
C1645-225-5000-M	**1.645**	**41.78**	**0.225**	**5.72**	**5.000**	**127.00**	**3.136**	**79.65**	**2.947**	**74.86**	**228.95**	**1018.44**	**122.83**	**21.49**	**C1645-225-5000-S**	**3.483**	**88.47**	**162.02**	**720.71**	**106.81**	**18.69**
C1645-225-5250-M	**1.645**	**41.78**	**0.225**	**5.72**	**5.250**	**133.35**	**3.284**	**83.40**	**3.083**	**78.32**	**228.95**	**1018.44**	**116.43**	**20.38**	**C1645-225-5250-S**	**3.650**	**92.70**	**162.02**	**720.71**	**101.24**	**17.72**
C1645-225-5500-M	**1.645**	**41.78**	**0.225**	**5.72**	**5.500**	**139.70**	**3.431**	**87.15**	**3.219**	**81.77**	**228.95**	**1018.44**	**110.67**	**19.37**	**C1645-225-5500-S**	**3.816**	**96.93**	**162.02**	**720.71**	**96.23**	**16.84**
C1645-225-5750-M	**1.645**	**41.78**	**0.225**	**5.72**	**5.750**	**146.05**	**3.579**	**90.90**	**3.355**	**85.22**	**228.95**	**1018.44**	**105.45**	**18.45**	**C1645-225-5750-S**	**3.983**	**101.17**	**162.02**	**720.71**	**91.69**	**16.05**
C1645-225-6000-M	**1.645**	**41.78**	**0.225**	**5.72**	**6.000**	**152.40**	**3.726**	**94.65**	**3.491**	**88.68**	**228.95**	**1018.44**	**100.70**	**17.62**	**C1645-225-6000-S**	**4.150**	**105.40**	**162.02**	**720.71**	**87.56**	**15.32**
C1645-225-6250-M	**1.645**	**41.78**	**0.225**	**5.72**	**6.250**	**158.75**	**3.874**	**98.40**	**3.627**	**92.13**	**228.95**	**1018.44**	**96.36**	**16.86**	**C1645-225-6250-S**	**4.316**	**109.63**	**162.02**	**720.71**	**83.79**	**14.66**
C1645-225-6500-M	**1.645**	**41.78**	**0.225**	**5.72**	**6.500**	**165.10**	**4.021**	**102.14**	**3.763**	**95.59**	**228.95**	**1018.44**	**92.37**	**16.17**	**C1645-225-6500-S**	**4.483**	**113.87**	**162.02**	**720.71**	**80.33**	**14.06**
C1645-225-6750-M	**1.645**	**41.78**	**0.225**	**5.72**	**6.750**	**171.45**	**4.169**	**105.89**	**3.899**	**99.04**	**228.95**	**1018.44**	**88.71**	**15.52**	**C1645-225-6750-S**	**4.650**	**118.10**	**162.02**	**720.71**	**77.14**	**13.50**
C1645-225-7000-M	**1.645**	**41.78**	**0.225**	**5.72**	**7.000**	**177.80**	**4.317**	**109.64**	**4.035**	**102.49**	**228.95**	**1018.44**	**85.32**	**14.93**	**C1645-225-7000-S**	**4.816**	**122.33**	**162.02**	**720.71**	**74.19**	**12.98**
C1645-225-7500-M	**1.645**	**41.78**	**0.225**	**5.72**	**7.500**	**190.50**	**4.612**	**117.14**	**4.307**	**109.40**	**228.95**	**1018.44**	**79.27**	**13.87**	**C1645-225-7500-S**	**5.150**	**130.80**	**162.02**	**720.71**	**68.93**	**12.06**
C1645-225-8000-M	**1.645**	**41.78**	**0.225**	**5.72**	**8.000**	**203.20**	**4.907**	**124.64**	**4.579**	**116.31**	**228.95**	**1018.44**	**74.02**	**12.95**	**C1645-225-8000-S**	**5.483**	**139.26**	**162.02**	**720.71**	**64.37**	**11.26**
C1645-225-8500-M	**1.645**	**41.78**	**0.225**	**5.72**	**8.500**	**215.90**	**5.202**	**132.13**	**4.851**	**123.22**	**228.95**	**1018.44**	**69.42**	**12.15**	**C1645-225-8500-S**	**5.816**	**147.73**	**162.02**	**720.71**	**60.37**	**10.56**
C1645-225-9000-M	**1.645**	**41.78**	**0.225**	**5.72**	**9.000**	**228.60**	**5.497**	**139.63**	**5.123**	**130.13**	**228.95**	**1018.44**	**65.36**	**11.44**	**C1645-225-9000-S**	**6.149**	**156.20**	**162.02**	**720.71**	**56.84**	**9.95**
C1645-225-9500-M	**1.645**	**41.78**	**0.225**	**5.72**	**9.500**	**241.30**	**5.792**	**147.13**	**5.395**	**137.03**	**228.95**	**1018.44**	**61.75**	**10.81**	**C1645-225-9500-S**	**6.483**	**164.66**	**162.02**	**720.71**	**53.70**	**9.40**
C1645-250-2250-M	**1.645**	**41.78**	**0.250**	**6.35**	**2.250**	**57.15**	**1.640**	**41.66**	**1.609**	**40.88**	**305.34**	**1358.23**	**500.77**	**87.63**	**C1645-250-2250-S**	**1.763**	**44.78**	**212.12**	**943.55**	**435.45**	**76.20**
C1645-250-2375-M	**1.645**	**41.78**	**0.250**	**6.35**	**2.375**	**60.33**	**1.722**	**43.73**	**1.687**	**42.84**	**305.34**	**1358.23**	**467.38**	**81.79**	**C1645-250-2375-S**	**1.853**	**47.07**	**212.12**	**943.55**	**406.42**	**71.12**
C1645-250-2500-M	**1.645**	**41.78**	**0.250**	**6.35**	**2.500**	**63.50**	**1.803**	**45.80**	**1.764**	**44.81**	**305.34**	**1358.23**	**438.17**	**76.68**	**C1645-250-2500-S**	**1.943**	**49.36**	**212.12**	**943.55**	**381.02**	**66.68**
C1645-250-2625-M	**1.645**	**41.78**	**0.250**	**6.35**	**2.625**	**66.68**	**1.885**	**47.87**	**1.842**	**46.78**	**305.34**	**1358.23**	**412.40**	**72.17**	**C1645-250-2625-S**	**2.033**	**51.65**	**212.12**	**943.55**	**358.60**	**62.76**
C1645-250-2750-M	**1.645**	**41.78**	**0.250**	**6.35**	**2.750**	**69.85**	**1.966**	**49.94**	**1.919**	**48.74**	**305.34**	**1358.23**	**389.48**	**68.16**	**C1645-250-2750-S**	**2.124**	**53.94**	**212.12**	**943.55**	**338.68**	**59.27**
C1645-250-2875-M	**1.645**	**41.78**	**0.250**	**6.35**	**2.875**	**73.03**	**2.047**	**52.01**	**1.997**	**50.71**	**305.34**	**1358.23**	**368.99**	**64.57**	**C1645-250-2875-S**	**2.214**	**56.23**	**212.12**	**943.55**	**320.86**	**56.15**
C1645-250-3000-M	**1.645**	**41.78**	**0.250**	**6.35**	**3.000**	**76.20**	**2.129**	**54.07**	**2.074**	**52.68**	**305.34**	**1358.23**	**350.54**	**61.34**	**C1645-250-3000-S**	**2.304**	**58.52**	**212.12**	**943.55**	**304.81**	**53.34**
C1645-250-3250-M	**1.645**	**41.78**	**0.250**	**6.35**	**3.250**	**82.55**	**2.292**	**58.21**	**2.229**	**56.61**	**305.34**	**1358.23**	**318.67**	**55.77**	**C1645-250-3250-S**	**2.485**	**63.11**	**212.12**	**943.55**	**277.10**	**48.49**
C1645-250-3500-M	**1.645**	**41.78**	**0.250**	**6.35**	**3.500**	**88.90**	**2.455**	**62.35**	**2.384**	**60.55**	**305.34**	**1358.23**	**292.11**	**51.12**	**C1645-250-3500-S**	**2.665**	**67.69**	**212.12**	**943.55**	**254.01**	**44.45**
C1645-250-3750-M	**1.645**	**41.78**	**0.250**	**6.35**	**3.750**	**95.25**	**2.618**	**66.49**	**2.539**	**64.48**	**305.34**	**1358.23**	**269.64**	**47.19**	**C1645-250-3750-S**	**2.845**	**72.27**	**212.12**	**943.55**	**234.47**	**41.03**
C1645-250-4000-M	**1.645**	**41.78**	**0.250**	**6.35**	**4.000**	**101.60**	**2.780**	**70.62**	**2.694**	**68.42**	**305.34**	**1358.23**	**250.38**	**43.82**	**C1645-250-4000-S**	**3.026**	**76.85**	**212.12**	**943.55**	**217.72**	**38.10**
C1645-250-4250-M	**1.645**	**41.78**	**0.250**	**6.35**	**4.250**	**107.95**	**2.943**	**74.76**	**2.848**	**72.35**	**305.34**	**1358.23**	**233.69**	**40.90**	**C1645-250-4250-S**	**3.206**	**81.44**	**212.12**	**943.55**	**203.21**	**35.56**
C1645-250-4500-M	**1.645**	**41.78**	**0.250**	**6.35**	**4.500**	**114.30**	**3.106**	**78.90**	**3.003**	**76.29**	**305.34**	**1358.23**	**219.09**	**38.34**	**C1645-250-4500-S**	**3.387**	**86.02**	**212.12**	**943.55**	**190.51**	**33.34**
C1645-250-4750-M	**1.645**	**41.78**	**0.250**	**6.35**	**4.750**	**120.65**	**3.269**	**83.04**	**3.158**	**80.22**	**305.34**	**1358.23**	**206.20**	**36.08**	**C1645-250-4750-S**	**3.567**	**90.60**	**212.12**	**943.55**	**179.30**	**31.38**
C1645-250-5000-M	**1.645**	**41.78**	**0.250**	**6.35**	**5.000**	**127.00**	**3.432**	**87.17**	**3.313**	**84.15**	**305.34**	**1358.23**	**194.74**	**34.08**	**C1645-250-5000-S**	**3.747**	**95.18**	**212.12**	**943.55**	**169.34**	**29.63**
C1645-250-5250-M	**1.645**	**41.78**	**0.250**	**6.35**	**5.250**	**133.35**	**3.595**	**91.31**	**3.468**	**88.09**	**305.34**	**1358.23**	**184.49**	**32.29**	**C1645-250-5250-S**	**3.928**	**99.77**	**212.12**	**943.55**	**160.43**	**28.07**
C1645-250-5500-M	**1.645**	**41.78**	**0.250**	**6.35**	**5.500**	**139.70**	**3.758**	**95.45**	**3.623**	**92.02**	**305.34**	**1358.23**	**175.27**	**30.67**	**C1645-250-5500-S**	**4.108**	**104.35**	**212.12**	**943.55**	**152.41**	**26.67**
C1645-250-5750-M	**1.645**	**41.78**	**0.250**	**6.35**	**5.750**	**146.05**	**3.921**	**99.59**	**3.778**	**95.96**	**305.34**	**1358.23**	**166.92**	**29.21**	**C1645-250-5750-S**	**4.289**	**108.93**	**212.12**	**943.55**	**145.15**	**25.40**
C1645-250-6000-M	**1.645**	**41.78**	**0.250**	**6.35**	**6.000**	**152.40**	**4.084**	**103.72**	**3.933**	**99.89**	**305.34**	**1358.23**	**159.33**	**27.88**	**C1645-250-6000-S**	**4.469**	**113.51**	**212.12**	**943.55**	**138.55**	**24.25**
C1645-250-6250-M	**1.645**	**41.78**	**0.250**	**6.35**	**6.250**	**158.75**	**4.247**	**107.86**	**4.088**	**103.83**	**305.34**	**1358.23**	**152.41**	**26.67**	**C1645-250-6250-S**	**4.649**	**118.10**	**212.12**	**943.55**	**132.53**	**23.19**
C1645-250-6500-M	**1.645**	**41.78**	**0.250**	**6.35**	**6.500**	**165.10**	**4.409**	**112.00**	**4.243**	**107.76**	**305.34**	**1358.23**	**146.06**	**25.56**	**C1645-250-6500-S**	**4.830**	**122.68**	**212.12**	**943.55**	**127.01**	**22.23**
C1645-250-6750-M	**1.645**	**41.78**	**0.250**	**6.35**	**6.750**	**171.45**	**4.572**	**116.14**	**4.397**	**111.69**	**305.34**	**1358.23**	**140.21**	**24.54**	**C1645-250-6750-S**	**5.010**	**127.26**	**212.12**	**943.55**	**121.93**	**21.34**
C1645-250-7000-M	**1.645**	**41.78**	**0.250**	**6.35**	**7.000**	**177.80**	**4.735**	**120.27**	**4.552**	**115.63**	**305.34**	**1358.23**	**134.82**	**23.59**	**C1645-250-7000-S**	**5.191**	**131.84**	**212.12**	**943.55**	**117.24**	**20.52**
C1645-250-7500-M	**1.645**	**41.78**	**0.250**	**6.35**	**7.500**	**190.50**	**5.061**	**128.55**	**4.862**	**123.50**	**305.34**	**1358.23**	**125.19**	**21.91**	**C1645-250-7500-S**	**5.551**	**141.01**	**212.12**	**943.55**	**108.86**	**19.05**
C1645-250-8000-M	**1.645**	**41.78**	**0.250**	**6.35**	**8.000**	**203.20**	**5.387**	**136.82**	**5.172**	**131.37**	**305.34**	**1358.23**	**116.85**	**20.45**	**C1645-250-8000-S**	**5.912**	**150.17**	**212.12**	**943.55**	**101.60**	**17.78**
C1645-250-8500-M	**1.645**	**41.78**	**0.250**	**6.35**	**8.500**	**215.90**	**5.713**	**145.10**	**5.482**	**139.24**	**305.34**	**1358.23**	**109.54**	**19.17**	**C1645-250-8500-S**	**6.273**	**159.34**	**212.12**	**943.55**	**95.25**	**16.67**
C1645-250-9000-M	**1.645**	**41.78**	**0.250**	**6.35**	**9.000**	**228.60**	**6.038**	**153.37**	**5.791**	**147.10**	**305.34**	**1358.23**	**103.10**	**18.04**	**C1645-250-9000-S**	**6.634**	**168.50**	**212.12**	**943.55**	**89.65**	**15.69**
C1645-250-9500-M	**1.645**	**41.78**	**0.250**	**6.35**	**9.500**	**241.30**	**6.364**	**161.65**	**6.101**	**154.97**	**305.34**	**1358.23**	**97.37**	**17.04**	**C1645-250-9500-S**	**6.995**	**177.67**	**212.12**	**943.55**	**84.67**	**14.82**
C1687-135-1500-M	1.687	42.85	0.135	3.43	1.500	38.10	0.903	22.94	0.605	15.37	38.40	170.81	64.40	11.27	C1687-135-1500-S	0.903	22.94	31.99	142.29	53.65	9.39
C1687-135-2000-M	1.687	42.85	0.135	3.43	2.000	50.80	1.161	29.49	0.714	18.14	38.40	170.81	45.80	8.02	C1687-135-2000-S	1.161	29.49	31.99	142.29	38.15	6.68
C1687-135-2500-M	1.687	42.85	0.135	3.43	2.500	63.50	1.418	36.02	0.823	20.90	38.40	170.81	35.50	6.21	C1687-135-2500-S	1.418	36.02	31.99	142.29	29.57	5.18
C1687-135-3000-M	1.687	42.85	0.135	3.43	3.000	76.20	1.676	42.57	0.932	23.67	38.40	170.81	29.00	5.08	C1687-135-3000-S	1.676	42.57	31.99	142.29	24.16	4.23
C1687-135-3500-M	1.687	42.85	0.135	3.43	3.500	88.90	1.933	49.10	1.041	26.44	38.40	170.81	24.50	4.29	C1687-135-3500-S	1.933	49.10	31.99	142.29	20.41	3.57
C1687-135-4000-M	1.687	42.85	0.135	3.43	4.000	101.60	2.191	55.65	1.150	29.21	38.40	170.81	21.20	3.71	C1687-135-4000-S	2.191	55.65	31.99	142.29	17.66	3.09
C1687-135-4500-M	1.687	42.85	0.135	3.43	4.500	114.30	2.449	62.20	1.259	31.98	38.40	170.81	18.70	3.27	C1687-135-4500-S	2.449	62.20	31.99	142.29	15.58	2.73

Part Numbers with an "*" are squared and not ground. **Part Numbers in bold** represent the newly expanded Associated Spring RAYMOND compression spring offering.

MUSIC WIRE														
Catalog #	Outside Diameter (OD)		Wire Diameter (d)		Free Length (L) Approx		Load Length (L_1)		Solid Height (Sh) Approx		Load (P) at L_1		Spring Rate (R)	
	in	mm	in	mm	in	mm	in	mm	in	mm	lb	N	lb/in	N/mm
C1687-135-5000-M	1.687	42.85	0.135	3.43	5.000	127.00	2.706	68.73	1.368	34.75	38.40	170.81	16.70	2.92
C1687-148-1500-M	1.687	42.85	0.148	3.76	1.500	38.10	0.947	24.05	0.682	17.32	49.57	220.50	89.70	15.70
C1687-148-2000-M	1.687	42.85	0.148	3.76	2.000	50.80	1.218	30.94	0.812	20.62	49.57	220.50	63.40	11.10
C1687-148-2500-M	1.687	42.85	0.148	3.76	2.500	63.50	1.488	37.80	0.942	23.93	49.57	220.50	49.00	8.58
C1687-148-3000-M	1.687	42.85	0.148	3.76	3.000	76.20	1.758	44.65	1.071	27.20	49.57	220.50	39.90	6.98
C1687-148-3500-M	1.687	42.85	0.148	3.76	3.500	88.90	2.029	51.54	1.201	30.51	49.57	220.50	33.70	5.90
C1687-148-4000-M	1.687	42.85	0.148	3.76	4.000	101.60	2.299	58.39	1.331	33.81	49.57	220.50	29.10	5.09
C1687-148-4500-M	1.687	42.85	0.148	3.76	4.500	114.30	2.570	65.28	1.461	37.11	49.57	220.50	25.70	4.50
C1687-148-5000-M	1.687	42.85	0.148	3.76	5.000	127.00	2.840	72.14	1.590	40.39	49.57	220.50	22.90	4.01
C1687-162-1500-M	1.687	42.85	0.162	4.12	1.500	38.10	0.994	25.25	0.765	19.43	63.65	283.13	125.80	22.02
C1687-162-2000-M	1.687	42.85	0.162	4.12	2.000	50.80	1.279	32.49	0.918	23.32	63.65	283.13	88.20	15.44
C1687-162-2500-M	1.687	42.85	0.162	4.12	2.500	63.50	1.563	39.70	1.070	27.18	63.65	283.13	68.00	11.90
C1687-162-3000-M	1.687	42.85	0.162	4.12	3.000	76.20	1.848	46.94	1.223	31.06	63.65	283.13	55.30	9.68
C1687-162-3500-M	1.687	42.85	0.162	4.12	3.500	88.90	2.133	54.18	1.376	34.95	63.65	283.13	46.60	8.16
C1687-162-4000-M	1.687	42.85	0.162	4.12	4.000	101.60	2.418	61.42	1.529	38.84	63.65	283.13	40.20	7.04
C1687-162-4500-M	1.687	42.85	0.162	4.12	4.500	114.30	2.703	68.66	1.682	42.72	63.65	283.13	35.40	6.20
C1687-162-5000-M	1.687	42.85	0.162	4.12	5.000	127.00	2.987	75.87	1.835	46.61	63.65	283.13	31.60	5.53
C1687-177-1500-M	1.687	42.85	0.177	4.50	1.500	38.10	1.043	26.49	0.851	21.62	81.26	361.46	177.70	31.10
C1687-177-2000-M	1.687	42.85	0.177	4.50	2.000	50.80	1.343	34.11	1.029	26.14	81.26	361.46	123.70	21.65
C1687-177-2500-M	1.687	42.85	0.177	4.50	2.500	63.50	1.644	41.76	1.207	30.66	81.26	361.46	94.90	16.61
C1687-177-3000-M	1.687	42.85	0.177	4.50	3.000	76.20	1.944	49.38	1.385	35.18	81.26	361.46	76.90	13.46
C1687-177-3500-M	1.687	42.85	0.177	4.50	3.500	88.90	2.244	57.00	1.563	39.70	81.26	361.46	64.70	11.32
C1687-177-4000-M	1.687	42.85	0.177	4.50	4.000	101.60	2.545	64.64	1.741	44.22	81.26	361.46	55.80	9.77
C1687-177-4500-M	1.687	42.85	0.177	4.50	4.500	114.30	2.845	72.26	1.920	48.77	81.26	361.46	49.10	8.59
C1687-177-5000-M	1.687	42.85	0.177	4.50	5.000	127.00	3.146	79.91	2.098	53.29	81.26	361.46	43.80	7.67
C1687-192-1500-M	1.687	42.85	0.192	4.88	1.500	38.10	1.089	27.66	0.934	23.72	101.60	451.94	247.40	43.30
C1687-192-2000-M	1.687	42.85	0.192	4.88	2.000	50.80	1.405	35.69	1.137	28.88	101.60	451.94	170.90	29.91
C1687-192-2500-M	1.687	42.85	0.192	4.88	2.500	63.50	1.721	43.71	1.340	34.04	101.60	451.94	130.50	22.84
C1687-192-3000-M	1.687	42.85	0.192	4.88	3.000	76.20	2.037	51.74	1.543	39.19	101.60	451.94	105.60	18.48
C1687-192-3500-M	1.687	42.85	0.192	4.88	3.500	88.90	2.353	59.77	1.747	44.37	101.60	451.94	88.60	15.51
C1687-192-4000-M	1.687	42.85	0.192	4.88	4.000	101.60	2.669	67.79	1.950	49.53	101.60	451.94	76.40	13.37
C1687-192-4500-M	1.687	42.85	0.192	4.88	4.500	114.30	2.985	75.82	2.153	54.69	101.60	451.94	67.10	11.74
C1687-192-5000-M	1.687	42.85	0.192	4.88	5.000	127.00	3.302	83.87	2.356	59.84	101.60	451.94	59.80	10.47
D13480	1.701	43.20	0.126	3.20	3.228	82.00	0.835	21.20	0.693	17.60	64.82	288.32	27.20	4.76
D13490	1.701	43.20	0.126	3.20	4.921	125.00	1.169	29.70	0.945	24.00	64.82	288.32	17.31	3.03
D13500	1.701	43.20	0.126	3.20	7.480	190.00	1.665	42.30	1.323	33.60	64.82	288.32	11.20	1.96
D13510	1.701	43.20	0.126	3.20	10.827	275.00	2.331	59.20	1.827	46.40	64.82	288.32	7.60	1.33
D13520	1.701	43.20	0.126	3.20	15.945	405.00	3.327	84.50	2.583	65.60	64.82	288.32	5.14	0.90
C1704-135-2875-M	**1.704**	**43.28**	**0.135**	**3.43**	**2.875**	**73.03**	**1.122**	**28.50**	**0.853**	**21.68**	**53.89**	**239.72**	**30.75**	**5.38**
C1704-135-3000-M	**1.704**	**43.28**	**0.135**	**3.43**	**3.000**	**76.20**	**1.163**	**29.54**	**0.881**	**22.37**	**53.89**	**239.72**	**29.34**	**5.13**
C1704-135-3250-M	**1.704**	**43.28**	**0.135**	**3.43**	**3.250**	**82.55**	**1.245**	**31.62**	**0.935**	**23.76**	**53.89**	**239.72**	**26.88**	**4.70**
C1704-135-3500-M	**1.704**	**43.28**	**0.135**	**3.43**	**3.500**	**88.90**	**1.327**	**33.70**	**0.990**	**25.15**	**53.89**	**239.72**	**24.80**	**4.34**
C1704-135-3750-M	**1.704**	**43.28**	**0.135**	**3.43**	**3.750**	**95.25**	**1.408**	**35.77**	**1.045**	**26.54**	**53.89**	**239.72**	**23.01**	**4.03**
C1704-135-4000-M	**1.704**	**43.28**	**0.135**	**3.43**	**4.000**	**101.60**	**1.490**	**37.85**	**1.100**	**27.93**	**53.89**	**239.72**	**21.47**	**3.76**
C1704-135-4250-M	**1.704**	**43.28**	**0.135**	**3.43**	**4.250**	**107.95**	**1.572**	**39.93**	**1.154**	**29.32**	**53.89**	**239.72**	**20.12**	**3.52**
C1704-135-4500-M	**1.704**	**43.28**	**0.135**	**3.43**	**4.500**	**114.30**	**1.654**	**42.00**	**1.209**	**30.71**	**53.89**	**239.72**	**18.93**	**3.31**
C1704-135-4750-M	**1.704**	**43.28**	**0.135**	**3.43**	**4.750**	**120.65**	**1.735**	**44.08**	**1.264**	**32.10**	**53.89**	**239.72**	**17.88**	**3.13**
C1704-135-5000-M	**1.704**	**43.28**	**0.135**	**3.43**	**5.000**	**127.00**	**1.817**	**46.16**	**1.318**	**33.49**	**53.89**	**239.72**	**16.93**	**2.96**
C1704-135-5250-M	**1.704**	**43.28**	**0.135**	**3.43**	**5.250**	**133.35**	**1.899**	**48.24**	**1.373**	**34.88**	**53.89**	**239.72**	**16.08**	**2.81**
C1704-135-5500-M	**1.704**	**43.28**	**0.135**	**3.43**	**5.500**	**139.70**	**1.981**	**50.31**	**1.428**	**36.26**	**53.89**	**239.72**	**15.31**	**2.68**
C1704-135-5750-M	**1.704**	**43.28**	**0.135**	**3.43**	**5.750**	**146.05**	**2.063**	**52.39**	**1.482**	**37.65**	**53.89**	**239.72**	**14.62**	**2.56**
C1704-135-6000-M	**1.704**	**43.28**	**0.135**	**3.43**	**6.000**	**152.40**	**2.144**	**54.47**	**1.537**	**39.04**	**53.89**	**239.72**	**13.98**	**2.45**
C1704-135-6250-M	**1.704**	**43.28**	**0.135**	**3.43**	**6.250**	**158.75**	**2.226**	**56.54**	**1.592**	**40.43**	**53.89**	**239.72**	**13.39**	**2.34**
C1704-135-6500-M	**1.704**	**43.28**	**0.135**	**3.43**	**6.500**	**165.10**	**2.308**	**58.62**	**1.647**	**41.82**	**53.89**	**239.72**	**12.86**	**2.25**
C1704-135-6750-M	**1.704**	**43.28**	**0.135**	**3.43**	**6.750**	**171.45**	**2.390**	**60.70**	**1.701**	**43.21**	**53.89**	**239.72**	**12.36**	**2.16**
C1704-135-7000-M	**1.704**	**43.28**	**0.135**	**3.43**	**7.000**	**177.80**	**2.471**	**62.78**	**1.756**	**44.60**	**53.89**	**239.72**	**11.90**	**2.08**
C1704-135-7500-M	**1.704**	**43.28**	**0.135**	**3.43**	**7.500**	**190.50**	**2.635**	**66.93**	**1.865**	**47.38**	**53.89**	**239.72**	**11.08**	**1.94**
C1704-135-8000-M	**1.704**	**43.28**	**0.135**	**3.43**	**8.000**	**203.20**	**2.799**	**71.08**	**1.975**	**50.16**	**53.89**	**239.72**	**10.36**	**1.81**
C1704-135-8500-M	**1.704**	**43.28**	**0.135**	**3.43**	**8.500**	**215.90**	**2.962**	**75.24**	**2.084**	**52.94**	**53.89**	**239.72**	**9.73**	**1.70**
C1704-135-9000-M	**1.704**	**43.28**	**0.135**	**3.43**	**9.000**	**228.60**	**3.126**	**79.39**	**2.194**	**55.72**	**53.89**	**239.72**	**9.17**	**1.61**
C1704-135-9500-M	**1.704**	**43.28**	**0.135**	**3.43**	**9.500**	**241.30**	**3.289**	**83.55**	**2.303**	**58.49**	**53.89**	**239.72**	**8.68**	**1.52**
C1704-148-2750-M	**1.704**	**43.28**	**0.148**	**3.76**	**2.750**	**69.85**	**1.183**	**30.04**	**0.951**	**24.17**	**69.61**	**309.63**	**44.41**	**7.77**
C1704-148-2875-M	**1.704**	**43.28**	**0.148**	**3.76**	**2.875**	**73.03**	**1.228**	**31.19**	**0.984**	**24.99**	**69.61**	**309.63**	**42.26**	**7.40**
C1704-148-3000-M	**1.704**	**43.28**	**0.148**	**3.76**	**3.000**	**76.20**	**1.273**	**32.33**	**1.017**	**25.82**	**69.61**	**309.63**	**40.31**	**7.05**

STAINLESS STEEL						
Catalog #	Load Length (L_1)		Load (P) at L_1		Spring Rate (R)	
	in	mm	lb	N	lb/in	N/mm
C1687-135-5000-S	2.706	68.73	31.99	142.29	13.91	2.43
C1687-148-1500-S	0.947	24.05	41.29	183.68	74.72	13.08
C1687-148-2000-S	1.218	30.94	41.29	183.68	52.81	9.24
C1687-148-2500-S	1.488	37.80	41.29	183.68	40.82	7.14
C1687-148-3000-S	1.758	44.65	41.29	183.68	33.24	5.82
C1687-148-3500-S	2.029	51.54	41.29	183.68	28.07	4.91
C1687-148-4000-S	2.299	58.39	41.29	183.68	24.24	4.24
C1687-148-4500-S	2.570	65.28	41.29	183.68	21.41	3.75
C1687-148-5000-S	2.840	72.14	41.29	183.68	19.08	3.34
C1687-162-1500-S	0.994	25.25	53.02	235.85	104.79	18.34
C1687-162-2000-S	1.279	32.49	53.02	235.85	73.47	12.86
C1687-162-2500-S	1.563	39.70	53.02	235.85	56.64	9.91
C1687-162-3000-S	1.848	46.94	53.02	235.85	46.07	8.06
C1687-162-3500-S	2.133	54.18	53.02	235.85	38.82	6.79
C1687-162-4000-S	2.418	61.42	53.02	235.85	33.49	5.86
C1687-162-4500-S	2.703	68.66	53.02	235.85	29.49	5.16
C1687-162-5000-S	2.987	75.87	53.02	235.85	26.32	4.61
C1687-177-1500-S	1.043	26.49	67.69	301.10	148.02	25.90
C1687-177-2000-S	1.343	34.11	67.69	301.10	103.04	18.03
C1687-177-2500-S	1.644	41.76	67.69	301.10	79.05	13.83
C1687-177-3000-S	1.944	49.38	67.69	301.10	64.06	11.21
C1687-177-3500-S	2.244	57.00	67.69	301.10	53.90	9.43
C1687-177-4000-S	2.545	64.64	67.69	301.10	46.48	8.13
C1687-177-4500-S	2.845	72.26	67.69	301.10	40.90	7.16
C1687-177-5000-S	3.146	79.91	67.69	301.10	36.49	6.38
C1687-192-1500-S	1.089	27.66	84.63	376.47	206.08	36.06
C1687-192-2000-S	1.405	35.69	84.63	376.47	142.36	24.91
C1687-192-2500-S	1.721	43.71	84.63	376.47	108.71	19.02
C1687-192-3000-S	2.037	51.74	84.63	376.47	87.97	15.39
C1687-192-3500-S	2.353	59.77	84.63	376.47	73.80	12.92
C1687-192-4000-S	2.669	67.79	84.63	376.47	63.64	11.14
C1687-192-4500-S	2.985	75.82	84.63	376.47	55.89	9.78
C1687-192-5000-S	3.302	83.87	84.63	376.47	49.81	8.72
D23480	0.835	21.20	54.01	240.27	22.69	3.97
D23490	1.169	29.70	54.01	240.27	14.40	2.52
D23500	1.665	42.30	54.01	240.27	9.31	1.63
D23510	2.331	59.20	54.01	240.27	6.34	1.11
D23520	3.327	84.50	54.01	240.27	4.29	0.75
C1704-135-2875-S	**1.347**	**34.22**	**40.85**	**181.69**	**26.73**	**4.68**
C1704-135-3000-S	**1.399**	**35.53**	**40.85**	**181.69**	**25.51**	**4.46**
C1704-135-3250-S	**1.502**	**38.16**	**40.85**	**181.69**	**23.37**	**4.09**
C1704-135-3500-S	**1.606**	**40.78**	**40.85**	**181.69**	**21.56**	**3.77**
C1704-135-3750-S	**1.709**	**43.41**	**40.85**	**181.69**	**20.01**	**3.50**
C1704-135-4000-S	**1.812**	**46.03**	**40.85**	**181.69**	**18.67**	**3.27**
C1704-135-4250-S	**1.916**	**48.66**	**40.85**	**181.69**	**17.50**	**3.06**
C1704-135-4500-S	**2.019**	**51.28**	**40.85**	**181.69**	**16.46**	**2.88**
C1704-135-4750-S	**2.122**	**53.91**	**40.85**	**181.69**	**15.55**	**2.72**
C1704-135-5000-S	**2.226**	**56.54**	**40.85**	**181.69**	**14.72**	**2.58**
C1704-135-5250-S	**2.329**	**59.16**	**40.85**	**181.69**	**13.99**	**2.45**
C1704-135-5500-S	**2.433**	**61.79**	**40.85**	**181.69**	**13.32**	**2.33**
C1704-135-5750-S	**2.536**	**64.41**	**40.85**	**181.69**	**12.71**	**2.22**
C1704-135-6000-S	**2.639**	**67.04**	**40.85**	**181.69**	**12.15**	**2.13**
C1704-135-6250-S	**2.743**	**69.66**	**40.85**	**181.69**	**11.65**	**2.04**
C1704-135-6500-S	**2.846**	**72.29**	**40.85**	**181.69**	**11.18**	**1.96**
C1704-135-6750-S	**2.949**	**74.91**	**40.85**	**181.69**	**10.75**	**1.88**
C1704-135-7000-S	**3.053**	**77.54**	**40.85**	**181.69**	**10.35**	**1.81**
C1704-135-7500-S	**3.260**	**82.79**	**40.85**	**181.69**	**9.63**	**1.69**
C1704-135-8000-S	**3.466**	**88.04**	**40.85**	**181.69**	**9.01**	**1.58**
C1704-135-8500-S	**3.673**	**93.29**	**40.85**	**181.69**	**8.46**	**1.48**
C1704-135-9000-S	**3.880**	**98.55**	**40.85**	**181.69**	**7.98**	**1.40**
C1704-135-9500-S	**4.086**	**103.80**	**40.85**	**181.69**	**7.55**	**1.32**
C1704-148-2750-S	**1.397**	**35.49**	**52.24**	**232.38**	**38.62**	**6.76**
C1704-148-2875-S	**1.453**	**36.92**	**52.24**	**232.38**	**36.75**	**6.43**
C1704-148-3000-S	**1.509**	**38.34**	**52.24**	**232.38**	**35.05**	**6.13**

FOR INFORMATION ON ALTERNATIVE FINISHES, SEE PAGE 311

Part Numbers with an "*" are squared and not ground. **Part Numbers in bold** represent the newly expanded Associated Spring RAYMOND compression spring offering.

MUSIC WIRE															STAINLESS STEEL						
Catalog #	Outside Diameter (OD)		Wire Diameter (d)		Free Length (L) Approx		Load Length (L_1)		Solid Height (Sh) Approx		Load (P) at L_1		Spring Rate (R)		Catalog #	Load Length (L_1)		Load (P) at L_1		Spring Rate (R)	
	in	mm	in	mm	in	mm	in	mm	in	mm	lb	N	lb/in	N/mm		in	mm	lb	N	lb/in	N/mm
C1704-148-3250-M	1.704	43.28	0.148	3.76	3.250	82.55	1.363	34.63	1.082	27.48	69.61	309.63	36.90	6.46	**C1704-148-3250-S**	1.622	41.19	52.24	232.38	32.08	5.61
C1704-148-3500-M	1.704	43.28	0.148	3.76	3.500	88.90	1.454	36.92	1.147	29.14	69.61	309.63	34.02	5.95	**C1704-148-3500-S**	1.734	44.04	52.24	232.38	29.58	5.18
C1704-148-3750-M	1.704	43.28	0.148	3.76	3.750	95.25	1.544	39.22	1.212	30.80	69.61	309.63	31.55	5.52	**C1704-148-3750-S**	1.846	46.89	52.24	232.38	27.44	4.80
C1704-148-4000-M	1.704	43.28	0.148	3.76	4.000	101.60	1.634	41.51	1.278	32.45	69.61	309.63	29.42	5.15	**C1704-148-4000-S**	1.958	49.74	52.24	232.38	25.59	4.48
C1704-148-4250-M	1.704	43.28	0.148	3.76	4.250	107.95	1.725	43.81	1.343	34.11	69.61	309.63	27.56	4.82	**C1704-148-4250-S**	2.070	52.59	52.24	232.38	23.97	4.19
C1704-148-4500-M	1.704	43.28	0.148	3.76	4.500	114.30	1.815	46.10	1.408	35.77	69.61	309.63	25.93	4.54	**C1704-148-4500-S**	2.183	55.44	52.24	232.38	22.54	3.95
C1704-148-4750-M	1.704	43.28	0.148	3.76	4.750	120.65	1.905	48.39	1.473	37.43	69.61	309.63	24.47	4.28	**C1704-148-4750-S**	2.295	58.29	52.24	232.38	21.28	3.72
C1704-148-5000-M	1.704	43.28	0.148	3.76	5.000	127.00	1.996	50.69	1.539	39.08	69.61	309.63	23.17	4.05	**C1704-148-5000-S**	2.407	61.14	52.24	232.38	20.15	3.53
C1704-148-5250-M	1.704	43.28	0.148	3.76	5.250	133.35	2.086	52.98	1.604	40.74	69.61	309.63	22.00	3.85	**C1704-148-5250-S**	2.519	63.99	52.24	232.38	19.13	3.35
C1704-148-5500-M	1.704	43.28	0.148	3.76	5.500	139.70	2.176	55.28	1.669	42.40	69.61	309.63	20.94	3.67	**C1704-148-5500-S**	2.631	66.84	52.24	232.38	18.21	3.19
C1704-148-5750-M	1.704	43.28	0.148	3.76	5.750	146.05	2.267	57.57	1.734	44.06	69.61	309.63	19.98	3.50	**C1704-148-5750-S**	2.744	69.69	52.24	232.38	17.38	3.04
C1704-148-6000-M	1.704	43.28	0.148	3.76	6.000	152.40	2.357	59.87	1.800	45.71	69.61	309.63	19.11	3.34	**C1704-148-6000-S**	2.856	72.54	52.24	232.38	16.62	2.91
C1704-148-6250-M	1.704	43.28	0.148	3.76	6.250	158.75	2.447	62.16	1.865	47.37	69.61	309.63	18.31	3.20	**C1704-148-6250-S**	2.968	75.39	52.24	232.38	15.92	2.79
C1704-148-6500-M	1.704	43.28	0.148	3.76	6.500	165.10	2.538	64.46	1.930	49.03	69.61	309.63	17.57	3.07	**C1704-148-6500-S**	3.080	78.24	52.24	232.38	15.28	2.67
C1704-148-6750-M	1.704	43.28	0.148	3.76	6.750	171.45	2.628	66.75	1.996	50.69	69.61	309.63	16.89	2.96	**C1704-148-6750-S**	3.192	81.09	52.24	232.38	14.68	2.57
C1704-148-7000-M	1.704	43.28	0.148	3.76	7.000	177.80	2.718	69.04	2.061	52.34	69.61	309.63	16.26	2.84	**C1704-148-7000-S**	3.305	83.94	52.24	232.38	14.14	2.47
C1704-148-7500-M	1.704	43.28	0.148	3.76	7.500	190.50	2.899	73.63	2.191	55.66	69.61	309.63	15.13	2.65	**C1704-148-7500-S**	3.529	89.64	52.24	232.38	13.16	2.30
C1704-148-8000-M	1.704	43.28	0.148	3.76	8.000	203.20	3.080	78.22	2.322	58.97	69.61	309.63	14.15	2.48	**C1704-148-8000-S**	3.753	95.34	52.24	232.38	12.30	2.15
C1704-148-8500-M*	1.704	43.28	0.148	3.76	8.500	215.90	3.355	85.21	2.569	65.26	69.61	309.63	13.53	2.37	**C1704-148-8500-S***	4.059	103.11	52.24	232.38	11.76	2.06
C1704-148-9000-M*	1.704	43.28	0.148	3.76	9.000	228.60	3.535	89.80	2.700	68.57	69.61	309.63	12.74	2.23	**C1704-148-9000-S***	4.284	108.81	52.24	232.38	11.08	1.94
C1704-148-9500-M*	1.704	43.28	0.148	3.76	9.500	241.30	3.716	94.39	2.830	71.89	69.61	309.63	12.04	2.11	**C1704-148-9500-S***	4.508	114.51	52.24	232.38	10.47	1.83
C1704-162-2625-M	1.704	43.28	0.162	4.12	2.625	66.68	1.243	31.58	1.049	26.66	89.48	398.02	64.76	11.33	**C1704-162-2625-S**	1.445	36.71	66.43	295.52	56.31	9.85
C1704-162-2750-M	1.704	43.28	0.162	4.12	2.750	69.85	1.293	32.85	1.088	27.64	89.48	398.02	61.42	10.75	**C1704-162-2750-S**	1.506	38.26	66.43	295.52	53.41	9.35
C1704-162-2875-M	1.704	43.28	0.162	4.12	2.875	73.03	1.343	34.12	1.127	28.61	89.48	398.02	58.41	10.22	**C1704-162-2875-S**	1.567	39.80	66.43	295.52	50.80	8.89
C1704-162-3000-M	1.704	43.28	0.162	4.12	3.000	76.20	1.393	35.39	1.165	29.59	89.48	398.02	55.69	9.74	**C1704-162-3000-S**	1.628	41.35	66.43	295.52	48.42	8.47
C1704-162-3250-M	1.704	43.28	0.162	4.12	3.250	82.55	1.493	37.92	1.242	31.55	89.48	398.02	50.93	8.91	**C1704-162-3250-S**	1.750	44.45	66.43	295.52	44.29	7.75
C1704-162-3500-M	1.704	43.28	0.162	4.12	3.500	88.90	1.593	40.46	1.319	33.51	89.48	398.02	46.92	8.21	**C1704-162-3500-S**	1.872	47.54	66.43	295.52	40.80	7.14
C1704-162-3750-M	1.704	43.28	0.162	4.12	3.750	95.25	1.693	43.00	1.396	35.46	89.48	398.02	43.50	7.61	**C1704-162-3750-S**	1.993	50.63	66.43	295.52	37.82	6.62
C1704-162-4000-M	1.704	43.28	0.162	4.12	4.000	101.60	1.793	45.53	1.473	37.42	89.48	398.02	40.54	7.09	**C1704-162-4000-S**	2.115	53.73	66.43	295.52	35.25	6.17
C1704-162-4250-M	1.704	43.28	0.162	4.12	4.250	107.95	1.893	48.07	1.550	39.38	89.48	398.02	37.96	6.64	**C1704-162-4250-S**	2.237	56.82	66.43	295.52	33.01	5.78
C1704-162-4500-M	1.704	43.28	0.162	4.12	4.500	114.30	1.992	50.61	1.627	41.34	89.48	398.02	35.68	6.24	**C1704-162-4500-S**	2.359	59.92	66.43	295.52	31.03	5.43
C1704-162-4750-M	1.704	43.28	0.162	4.12	4.750	120.65	2.092	53.14	1.704	43.29	89.48	398.02	33.67	5.89	**C1704-162-4750-S**	2.481	63.01	66.43	295.52	29.28	5.12
C1704-162-5000-M	1.704	43.28	0.162	4.12	5.000	127.00	2.192	55.68	1.782	45.25	89.48	398.02	31.87	5.58	**C1704-162-5000-S**	2.603	66.11	66.43	295.52	27.71	4.85
C1704-162-5250-M	1.704	43.28	0.162	4.12	5.250	133.35	2.292	58.22	1.859	47.21	89.48	398.02	30.25	5.29	**C1704-162-5250-S**	2.724	69.20	66.43	295.52	26.31	4.60
C1704-162-5500-M	1.704	43.28	0.162	4.12	5.500	139.70	2.392	60.76	1.936	49.17	89.48	398.02	28.79	5.04	**C1704-162-5500-S**	2.846	72.29	66.43	295.52	25.03	4.38
C1704-162-5750-M	1.704	43.28	0.162	4.12	5.750	146.05	2.492	63.29	2.013	51.12	89.48	398.02	27.46	4.81	**C1704-162-5750-S**	2.968	75.39	66.43	295.52	23.88	4.18
C1704-162-6000-M	1.704	43.28	0.162	4.12	6.000	152.40	2.592	65.83	2.090	53.08	89.48	398.02	26.25	4.59	**C1704-162-6000-S**	3.090	78.48	66.43	295.52	22.83	4.00
C1704-162-6250-M	1.704	43.28	0.162	4.12	6.250	158.75	2.692	68.37	2.167	55.04	89.48	398.02	25.15	4.40	**C1704-162-6250-S**	3.212	81.58	66.43	295.52	21.87	3.83
C1704-162-6500-M	1.704	43.28	0.162	4.12	6.500	165.10	2.791	70.90	2.244	57.00	89.48	398.02	24.13	4.22	**C1704-162-6500-S**	3.334	84.67	66.43	295.52	20.98	3.67
C1704-162-6750-M*	1.704	43.28	0.162	4.12	6.750	171.45	2.989	75.91	2.441	62.00	89.48	398.02	23.79	4.16	**C1704-162-6750-S***	3.538	89.88	66.43	295.52	20.69	3.62
C1704-162-7000-M*	1.704	43.28	0.162	4.12	7.000	177.80	3.089	78.45	2.518	63.96	89.48	398.02	22.88	4.00	**C1704-162-7000-S***	3.660	92.97	66.43	295.52	19.89	3.48
C1704-162-7500-M*	1.704	43.28	0.162	4.12	7.500	190.50	3.288	83.52	2.672	67.88	89.48	398.02	21.25	3.72	**C1704-162-7500-S***	3.904	99.16	66.43	295.52	18.47	3.23
C1704-162-8000-M*	1.704	43.28	0.162	4.12	8.000	203.20	3.488	88.60	2.826	71.79	89.48	398.02	19.83	3.47	**C1704-162-8000-S***	4.148	105.35	66.43	295.52	17.25	3.02
C1704-162-8500-M*	1.704	43.28	0.162	4.12	8.500	215.90	3.688	93.67	2.981	75.71	89.48	398.02	18.59	3.25	**C1704-162-8500-S***	4.391	111.54	66.43	295.52	16.17	2.83
C1704-162-9000-M*	1.704	43.28	0.162	4.12	9.000	228.60	3.888	98.74	3.135	79.62	89.48	398.02	17.50	3.06	**C1704-162-9000-S***	4.635	117.72	66.43	295.52	15.22	2.66
C1704-162-9500-M*	1.704	43.28	0.162	4.12	9.500	241.30	4.087	103.82	3.289	83.54	89.48	398.02	16.53	2.89	**C1704-162-9500-S***	4.878	123.91	66.43	295.52	14.38	2.52
C1704-177-2500-M	1.704	43.28	0.177	4.50	2.500	63.50	1.301	33.04	1.144	29.05	114.38	508.78	95.39	16.69	**C1704-177-2500-S**	1.488	37.79	83.95	373.42	82.95	14.52
C1704-177-2625-M	1.704	43.28	0.177	4.50	2.625	66.68	1.356	34.44	1.189	30.19	114.38	508.78	90.14	15.77	**C1704-177-2625-S**	1.554	39.47	83.95	373.42	78.38	13.72
C1704-177-2750-M	1.704	43.28	0.177	4.50	2.750	69.85	1.411	35.85	1.234	31.34	114.38	508.78	85.43	14.95	**C1704-177-2750-S**	1.620	41.15	83.95	373.42	74.29	13.00
C1704-177-2875-M	1.704	43.28	0.177	4.50	2.875	73.03	1.466	37.25	1.279	32.48	114.38	508.78	81.20	14.21	**C1704-177-2875-S**	1.686	42.83	83.95	373.42	70.61	12.36
C1704-177-3000-M	1.704	43.28	0.177	4.50	3.000	76.20	1.522	38.65	1.324	33.62	114.38	508.78	77.36	13.54	**C1704-177-3000-S**	1.752	44.50	83.95	373.42	67.27	11.77
C1704-177-3250-M	1.704	43.28	0.177	4.50	3.250	82.55	1.632	41.45	1.414	35.91	114.38	508.78	70.68	12.37	**C1704-177-3250-S**	1.884	47.86	83.95	373.42	61.46	10.76
C1704-177-3500-M	1.704	43.28	0.177	4.50	3.500	88.90	1.742	44.25	1.504	38.19	114.38	508.78	65.07	11.39	**C1704-177-3500-S**	2.016	51.21	83.95	373.42	56.58	9.90
C1704-177-3750-M	1.704	43.28	0.177	4.50	3.750	95.25	1.852	47.05	1.593	40.47	114.38	508.78	60.28	10.55	**C1704-177-3750-S**	2.148	54.57	83.95	373.42	52.42	9.17
C1704-177-4000-M	1.704	43.28	0.177	4.50	4.000	101.60	1.963	49.85	1.683	42.76	114.38	508.78	56.14	9.83	**C1704-177-4000-S**	2.281	57.92	83.95	373.42	48.82	8.54
C1704-177-4250-M	1.704	43.28	0.177	4.50	4.250	107.95	2.073	52.66	1.773	45.04	114.38	508.78	52.54	9.19	**C1704-177-4250-S**	2.413	61.28	83.95	373.42	45.69	8.00
C1704-177-4500-M	1.704	43.28	0.177	4.50	4.500	114.30	2.183	55.46	1.863	47.33	114.38	508.78	49.37	8.64	**C1704-177-4500-S**	2.545	64.64	83.95	373.42	42.93	7.51
C1704-177-4750-M	1.704	43.28	0.177	4.50	4.750	120.65	2.294	58.26	1.953	49.61	114.38	508.78	46.57	8.15	**C1704-177-4750-S**	2.677	67.99	83.95	373.42	40.49	7.09
C1704-177-5000-M	1.704	43.28	0.177	4.50	5.000	127.00	2.404	61.06	2.043	51.90	114.38	508.78	44.06	7.71	**C1704-177-5000-S**	2.809	71.35	83.95	373.42	38.31	6.70
C1704-177-5250-M	1.704	43.28	0.177	4.50	5.250	133.35	2.514	63.86	2.133	54.18	114.38	508.78	41.81	7.32	**C1704-177-5250-S**	2.941	74.70	83.95	373.42	36.36	6.36
C1704-177-5500-M	1.704	43.28	0.177	4.50	5.500	139.70	2.625	66.67	2.223	56.47	114.38	508.78	39.78	6.96	**C1704-177-5500-S**	3.073	78.06	83.95	373.42	34.59	6.05
C1704-177-5750-M	1.704	43.28	0.177	4.50	5.750	146.05	2.735	69.47	2.313	58.75	114.38	508.78	37.94	6.64	**C1704-177-5750-S**	3.205	81.41	83.95	373.42	32.99	5.77
C1704-177-6000-M	1.704	43.28	0.177	4.50	6.000	152.40	2.845	72.27	2.403	61.04	114.38	508.78	36.26	6.34	**C1704-177-6000-S**	3.337	84.77	83.95	373.42	31.53	5.52
C1704-177-6250-M	1.704	43.28	0.177	4.50	6.250	158.75	2.956	75.07	2.493	63.32	114.38	508.78	34.72	6.08	**C1704-177-6250-S**	3.469	88.12	83.95	373.42	30.19	5.28

Part Numbers with an "*" are squared and not ground. **Part Numbers in bold** represent the newly expanded Associated Spring RAYMOND compression spring offering.

MUSIC WIRE														
Catalog #	Outside Diameter (OD)		Wire Diameter (d)		Free Length (L) Approx		Load Length (L_1)		Solid Height (Sh) Approx		Load (P) at L_1		Spring Rate (R)	
	in	mm	in	mm	in	mm	in	mm	in	mm	lb	N	lb/in	N/mm
C1704-177-6500-M	1.704	43.28	0.177	4.50	6.500	165.10	3.066	77.87	2.583	65.60	114.38	508.78	33.31	5.83
C1704-177-6750-M*	1.704	43.28	0.177	4.50	6.750	171.45	3.275	83.19	2.795	70.99	114.38	508.78	32.92	5.76
C1704-177-7000-M*	1.704	43.28	0.177	4.50	7.000	177.80	3.385	85.99	2.885	73.28	114.38	508.78	31.64	5.54
C1704-177-7500-M*	1.704	43.28	0.177	4.50	7.500	190.50	3.606	91.59	3.065	77.85	114.38	508.78	29.37	5.14
C1704-177-8000-M*	1.704	43.28	0.177	4.50	8.000	203.20	3.827	97.20	3.245	82.42	114.38	508.78	27.41	4.80
C1704-177-8500-M*	1.704	43.28	0.177	4.50	8.500	215.90	4.047	102.80	3.425	86.98	114.38	508.78	25.69	4.50
C1704-177-9000-M*	1.704	43.28	0.177	4.50	9.000	228.60	4.268	108.40	3.604	91.55	114.38	508.78	24.17	4.23
C1704-177-9500-M*	1.704	43.28	0.177	4.50	9.500	241.30	4.489	114.01	3.784	96.12	114.38	508.78	22.82	3.99
C1704-192-2375-M	1.704	43.28	0.192	4.88	2.375	60.33	1.346	34.18	1.222	31.04	143.24	637.14	139.14	24.35
C1704-192-2500-M	1.704	43.28	0.192	4.88	2.500	63.50	1.406	35.71	1.273	32.35	143.24	637.14	130.92	22.91
C1704-192-2625-M	1.704	43.28	0.192	4.88	2.625	66.68	1.466	37.24	1.325	33.65	143.24	637.14	123.61	21.63
C1704-192-2750-M	1.704	43.28	0.192	4.88	2.750	69.85	1.527	38.78	1.376	34.96	143.24	637.14	117.08	20.49
C1704-192-2875-M	1.704	43.28	0.192	4.88	2.875	73.03	1.587	40.31	1.428	36.26	143.24	637.14	111.21	19.46
C1704-192-3000-M	1.704	43.28	0.192	4.88	3.000	76.20	1.647	41.84	1.479	37.57	143.24	637.14	105.90	18.53
C1704-192-3250-M	1.704	43.28	0.192	4.88	3.250	82.55	1.768	44.91	1.582	40.18	143.24	637.14	96.66	16.91
C1704-192-3500-M	1.704	43.28	0.192	4.88	3.500	88.90	1.889	47.98	1.685	42.79	143.24	637.14	88.90	15.56
C1704-192-3750-M	1.704	43.28	0.192	4.88	3.750	95.25	2.010	51.04	1.788	45.40	143.24	637.14	82.30	14.40
C1704-192-4000-M	1.704	43.28	0.192	4.88	4.000	101.60	2.130	54.11	1.890	48.02	143.24	637.14	76.61	13.41
C1704-192-4250-M	1.704	43.28	0.192	4.88	4.250	107.95	2.251	57.18	1.993	50.63	143.24	637.14	71.66	12.54
C1704-192-4500-M	1.704	43.28	0.192	4.88	4.500	114.30	2.372	60.24	2.096	53.24	143.24	637.14	67.30	11.78
C1704-192-4750-M	1.704	43.28	0.192	4.88	4.750	120.65	2.493	63.31	2.199	55.85	143.24	637.14	63.45	11.10
C1704-192-5000-M	1.704	43.28	0.192	4.88	5.000	127.00	2.613	66.38	2.302	58.46	143.24	637.14	60.01	10.50
C1704-192-5250-M	1.704	43.28	0.192	4.88	5.250	133.35	2.734	69.44	2.404	61.07	143.24	637.14	56.93	9.96
C1704-192-5500-M	1.704	43.28	0.192	4.88	5.500	139.70	2.855	72.51	2.507	63.69	143.24	637.14	54.15	9.48
C1704-192-5750-M	1.704	43.28	0.192	4.88	5.750	146.05	2.975	75.58	2.610	66.30	143.24	637.14	51.63	9.03
C1704-192-6000-M	1.704	43.28	0.192	4.88	6.000	152.40	3.096	78.64	2.713	68.91	143.24	637.14	49.33	8.63
C1704-192-6250-M	1.704	43.28	0.192	4.88	6.250	158.75	3.217	81.71	2.816	71.52	143.24	637.14	47.23	8.26
C1704-192-6500-M	1.704	43.28	0.192	4.88	6.500	165.10	3.338	84.78	2.919	74.13	143.24	637.14	45.29	7.93
C1704-192-6750-M	1.704	43.28	0.192	4.88	6.750	171.45	3.458	87.84	3.021	76.74	143.24	637.14	43.52	7.62
C1704-192-7000-M	1.704	43.28	0.192	4.88	7.000	177.80	3.579	90.91	3.124	79.36	143.24	637.14	41.87	7.33
C1704-192-7500-M	1.704	43.28	0.192	4.88	7.500	190.50	3.821	97.04	3.330	84.58	143.24	637.14	38.93	6.81
C1704-192-8000-M	1.704	43.28	0.192	4.88	8.000	203.20	4.062	103.18	3.536	89.80	143.24	637.14	36.37	6.37
C1704-192-8500-M	1.704	43.28	0.192	4.88	8.500	215.90	4.304	109.31	3.741	95.02	143.24	637.14	34.13	5.97
C1704-192-9000-M*	1.704	43.28	0.192	4.88	9.000	228.60	4.644	117.96	4.069	103.36	143.24	637.14	32.89	5.75
C1704-192-9500-M*	1.704	43.28	0.192	4.88	9.500	241.30	4.886	124.10	4.275	108.59	143.24	637.14	31.04	5.43
C1704-207-2375-M	1.704	43.28	0.207	5.26	2.375	60.33	1.441	36.61	1.340	34.05	176.27	784.09	188.80	33.04
C1704-207-2500-M	1.704	43.28	0.207	5.26	2.500	63.50	1.507	38.27	1.398	35.51	176.27	784.09	177.48	31.06
C1704-207-2625-M	1.704	43.28	0.207	5.26	2.625	66.68	1.572	39.94	1.456	36.98	176.27	784.09	167.45	29.30
C1704-207-2750-M	1.704	43.28	0.207	5.26	2.750	69.85	1.638	41.60	1.514	38.45	176.27	784.09	158.49	27.74
C1704-207-2875-M	1.704	43.28	0.207	5.26	2.875	73.03	1.703	43.26	1.571	39.91	176.27	784.09	150.44	26.33
C1704-207-3000-M	1.704	43.28	0.207	5.26	3.000	76.20	1.769	44.93	1.629	41.38	176.27	784.09	143.17	25.05
C1704-207-3250-M	1.704	43.28	0.207	5.26	3.250	82.55	1.900	48.25	1.745	44.31	176.27	784.09	130.55	22.85
C1704-207-3500-M	1.704	43.28	0.207	5.26	3.500	88.90	2.031	51.58	1.860	47.24	176.27	784.09	119.97	20.99
C1704-207-3750-M	1.704	43.28	0.207	5.26	3.750	95.25	2.162	54.91	1.975	50.18	176.27	784.09	110.98	19.42
C1704-207-4000-M	1.704	43.28	0.207	5.26	4.000	101.60	2.293	58.23	2.091	53.11	176.27	784.09	103.24	18.07
C1704-207-4250-M	1.704	43.28	0.207	5.26	4.250	107.95	2.424	61.56	2.206	56.04	176.27	784.09	96.51	16.89
C1704-207-4500-M	1.704	43.28	0.207	5.26	4.500	114.30	2.555	64.89	2.322	58.98	176.27	784.09	90.61	15.86
C1704-207-4750-M	1.704	43.28	0.207	5.26	4.750	120.65	2.686	68.21	2.437	61.91	176.27	784.09	85.39	14.94
C1704-207-5000-M	1.704	43.28	0.207	5.26	5.000	127.00	2.817	71.54	2.553	64.84	176.27	784.09	80.73	14.13
C1704-207-5250-M	1.704	43.28	0.207	5.26	5.250	133.35	2.948	74.87	2.668	67.77	176.27	784.09	76.56	13.40
C1704-207-5500-M	1.704	43.28	0.207	5.26	5.500	139.70	3.078	78.19	2.784	70.71	176.27	784.09	72.79	12.74
C1704-207-5750-M	1.704	43.28	0.207	5.26	5.750	146.05	3.209	81.52	2.899	73.64	176.27	784.09	69.38	12.14
C1704-207-6000-M	1.704	43.28	0.207	5.26	6.000	152.40	3.340	84.85	3.015	76.57	176.27	784.09	66.28	11.60
C1704-207-6250-M	1.704	43.28	0.207	5.26	6.250	158.75	3.471	88.17	3.130	79.51	176.27	784.09	63.44	11.10
C1704-207-6500-M	1.704	43.28	0.207	5.26	6.500	165.10	3.602	91.50	3.246	82.44	176.27	784.09	60.83	10.65
C1704-207-6750-M	1.704	43.28	0.207	5.26	6.750	171.45	3.733	94.83	3.361	85.37	176.27	784.09	58.43	10.23
C1704-207-7000-M	1.704	43.28	0.207	5.26	7.000	177.80	3.864	98.15	3.477	88.30	176.27	784.09	56.22	9.84
C1704-207-7500-M	1.704	43.28	0.207	5.26	7.500	190.50	4.126	104.81	3.707	94.17	176.27	784.09	52.25	9.14
C1704-207-8000-M	1.704	43.28	0.207	5.26	8.000	203.20	4.388	111.46	3.938	100.04	176.27	784.09	48.80	8.54
C1704-207-8500-M	1.704	43.28	0.207	5.26	8.500	215.90	4.650	118.11	4.169	105.90	176.27	784.09	45.79	8.01
C1704-207-9000-M	1.704	43.28	0.207	5.26	9.000	228.60	4.912	124.77	4.400	111.77	176.27	784.09	43.12	7.55
C1704-207-9500-M	1.704	43.28	0.207	5.26	9.500	241.30	5.174	131.42	4.631	117.63	176.27	784.09	40.75	7.13
C1704-225-2375-M	1.704	43.28	0.225	5.72	2.375	60.33	1.550	39.36	1.474	37.44	221.71	986.20	268.60	47.00
C1704-225-2500-M	1.704	43.28	0.225	5.72	2.500	63.50	1.621	41.17	1.539	39.09	221.71	986.20	252.22	44.14

STAINLESS STEEL						
Catalog #	Load Length (L_1)		Load (P) at L_1		Spring Rate (R)	
	in	mm	lb	N	lb/in	N/mm
C1704-177-6500-S	3.601	91.48	83.95	373.42	28.96	5.07
C1704-177-6750-S*	3.817	96.95	83.95	373.42	28.62	5.01
C1704-177-7000-S*	3.949	100.31	83.95	373.42	27.52	4.82
C1704-177-7500-S*	4.213	107.02	83.95	373.42	25.54	4.47
C1704-177-8000-S*	4.478	113.73	83.95	373.42	23.83	4.17
C1704-177-8500-S*	4.742	120.44	83.95	373.42	22.34	3.91
C1704-177-9000-S*	5.006	127.15	83.95	373.42	21.02	3.68
C1704-177-9500-S*	5.270	133.86	83.95	373.42	19.85	3.47
C1704-192-2375-S	1.516	38.51	103.93	462.28	120.99	21.17
C1704-192-2500-S	1.587	40.31	103.93	462.28	113.84	19.92
C1704-192-2625-S	1.658	42.12	103.93	462.28	107.49	18.81
C1704-192-2750-S	1.729	43.92	103.93	462.28	101.81	17.82
C1704-192-2875-S	1.800	45.73	103.93	462.28	96.70	16.92
C1704-192-3000-S	1.871	47.53	103.93	462.28	92.08	16.11
C1704-192-3250-S	2.014	51.14	103.93	462.28	84.05	14.71
C1704-192-3500-S	2.156	54.75	103.93	462.28	77.31	13.53
C1704-192-3750-S	2.298	58.36	103.93	462.28	71.57	12.52
C1704-192-4000-S	2.440	61.97	103.93	462.28	66.62	11.66
C1704-192-4250-S	2.582	65.59	103.93	462.28	62.31	10.90
C1704-192-4500-S	2.724	69.20	103.93	462.28	58.53	10.24
C1704-192-4750-S	2.866	72.81	103.93	462.28	55.17	9.66
C1704-192-5000-S	3.009	76.42	103.93	462.28	52.19	9.13
C1704-192-5250-S	3.151	80.03	103.93	462.28	49.50	8.66
C1704-192-5500-S	3.293	83.64	103.93	462.28	47.09	8.24
C1704-192-5750-S	3.435	87.25	103.93	462.28	44.89	7.86
C1704-192-6000-S	3.577	90.86	103.93	462.28	42.89	7.51
C1704-192-6250-S	3.719	94.47	103.93	462.28	41.07	7.19
C1704-192-6500-S	3.861	98.08	103.93	462.28	39.39	6.89
C1704-192-6750-S	4.004	101.69	103.93	462.28	37.84	6.62
C1704-192-7000-S	4.146	105.30	103.93	462.28	36.41	6.37
C1704-192-7500-S	4.430	112.52	103.93	462.28	33.85	5.92
C1704-192-8000-S	4.714	119.74	103.93	462.28	31.63	5.54
C1704-192-8500-S	4.999	126.96	103.93	462.28	29.68	5.19
C1704-192-9000-S*	5.366	136.29	103.93	462.28	28.60	5.00
C1704-192-9500-S*	5.650	143.51	103.93	462.28	26.99	4.72
C1704-207-2375-S	1.605	40.76	126.44	562.44	164.17	28.73
C1704-207-2500-S	1.681	42.69	126.44	562.44	154.33	27.01
C1704-207-2625-S	1.757	44.62	126.44	562.44	145.61	25.48
C1704-207-2750-S	1.833	46.55	126.44	562.44	137.82	24.12
C1704-207-2875-S	1.908	48.47	126.44	562.44	130.82	22.89
C1704-207-3000-S	1.984	50.40	126.44	562.44	124.49	21.79
C1704-207-3250-S	2.136	54.26	126.44	562.44	113.52	19.87
C1704-207-3500-S	2.288	58.11	126.44	562.44	104.32	18.26
C1704-207-3750-S	2.440	61.97	126.44	562.44	96.50	16.89
C1704-207-4000-S	2.592	65.83	126.44	562.44	89.78	15.71
C1704-207-4250-S	2.743	69.68	126.44	562.44	83.93	14.69
C1704-207-4500-S	2.895	73.54	126.44	562.44	78.79	13.79
C1704-207-4750-S	3.047	77.39	126.44	562.44	74.25	12.99
C1704-207-5000-S	3.199	81.25	126.44	562.44	70.20	12.29
C1704-207-5250-S	3.351	85.11	126.44	562.44	66.57	11.65
C1704-207-5500-S	3.502	88.96	126.44	562.44	63.30	11.08
C1704-207-5750-S	3.654	92.82	126.44	562.44	60.33	10.56
C1704-207-6000-S	3.806	96.67	126.44	562.44	57.63	10.09
C1704-207-6250-S	3.958	100.53	126.44	562.44	55.16	9.65
C1704-207-6500-S	4.110	104.39	126.44	562.44	52.90	9.26
C1704-207-6750-S	4.262	108.24	126.44	562.44	50.81	8.89
C1704-207-7000-S	4.413	112.10	126.44	562.44	48.88	8.55
C1704-207-7500-S	4.717	119.81	126.44	562.44	45.43	7.95
C1704-207-8000-S	5.021	127.52	126.44	562.44	42.44	7.43
C1704-207-8500-S	5.324	135.24	126.44	562.44	39.81	6.97
C1704-207-9000-S	5.628	142.95	126.44	562.44	37.50	6.56
C1704-207-9500-S	5.931	150.66	126.44	562.44	35.43	6.20
C1704-225-2375-S	1.703	43.26	156.89	697.89	233.56	40.87
C1704-225-2500-S	1.785	45.33	156.89	697.89	219.32	38.38

FOR INFORMATION ON ALTERNATIVE FINISHES, SEE PAGE 311

Part Numbers with an "*" are squared and not ground. **Part Numbers in bold** represent the newly expanded Associated Spring RAYMOND compression spring offering.

MUSIC WIRE															STAINLESS STEEL						
Catalog #	Outside Diameter (OD)		Wire Diameter (d)		Free Length (L) Approx		Load Length (L_1)		Solid Height (Sh) Approx		Load (P) at L_1		Spring Rate (R)		Catalog #	Load Length (L_1)		Load (P) at L_1		Spring Rate (R)	
	in	mm	in	mm	in	mm	in	mm	in	mm	lb	N	lb/in	N/mm		in	mm	lb	N	lb/in	N/mm
C1704-225-2625-M	**1.704**	**43.28**	**0.225**	**5.72**	**2.625**	**66.68**	**1.692**	**42.99**	**1.604**	**40.75**	**221.71**	**986.20**	**237.73**	**41.60**	**C1704-225-2625-S**	**1.866**	**47.40**	**156.89**	**697.89**	**206.72**	**36.18**
C1704-225-2750-M	**1.704**	**43.28**	**0.225**	**5.72**	**2.750**	**69.85**	**1.764**	**44.80**	**1.669**	**42.40**	**221.71**	**986.20**	**224.81**	**39.34**	**C1704-225-2750-S**	**1.947**	**49.46**	**156.89**	**697.89**	**195.48**	**34.21**
C1704-225-2875-M	**1.704**	**43.28**	**0.225**	**5.72**	**2.875**	**73.03**	**1.835**	**46.61**	**1.734**	**44.05**	**221.71**	**986.20**	**213.22**	**37.31**	**C1704-225-2875-S**	**2.029**	**51.53**	**156.89**	**697.89**	**185.41**	**32.45**
C1704-225-3000-M	**1.704**	**43.28**	**0.225**	**5.72**	**3.000**	**76.20**	**1.907**	**48.43**	**1.799**	**45.70**	**221.71**	**986.20**	**202.77**	**35.48**	**C1704-225-3000-S**	**2.110**	**53.60**	**156.89**	**697.89**	**176.32**	**30.86**
C1704-225-3250-M	**1.704**	**43.28**	**0.225**	**5.72**	**3.250**	**82.55**	**2.049**	**52.05**	**1.929**	**49.01**	**221.71**	**986.20**	**184.66**	**32.32**	**C1704-225-3250-S**	**2.273**	**57.73**	**156.89**	**697.89**	**160.58**	**28.10**
C1704-225-3500-M	**1.704**	**43.28**	**0.225**	**5.72**	**3.500**	**88.90**	**2.192**	**55.68**	**2.059**	**52.31**	**221.71**	**986.20**	**169.53**	**29.67**	**C1704-225-3500-S**	**2.436**	**61.87**	**156.89**	**697.89**	**147.41**	**25.80**
C1704-225-3750-M	**1.704**	**43.28**	**0.225**	**5.72**	**3.750**	**95.25**	**2.335**	**59.31**	**2.190**	**55.61**	**221.71**	**986.20**	**156.68**	**27.42**	**C1704-225-3750-S**	**2.598**	**66.00**	**156.89**	**697.89**	**136.25**	**23.84**
C1704-225-4000-M	**1.704**	**43.28**	**0.225**	**5.72**	**4.000**	**101.60**	**2.478**	**62.94**	**2.320**	**58.92**	**221.71**	**986.20**	**145.65**	**25.49**	**C1704-225-4000-S**	**2.761**	**70.14**	**156.89**	**697.89**	**126.65**	**22.16**
C1704-225-4250-M	**1.704**	**43.28**	**0.225**	**5.72**	**4.250**	**107.95**	**2.621**	**66.56**	**2.450**	**62.22**	**221.71**	**986.20**	**136.07**	**23.81**	**C1704-225-4250-S**	**2.924**	**74.27**	**156.89**	**697.89**	**118.32**	**20.71**
C1704-225-4500-M	**1.704**	**43.28**	**0.225**	**5.72**	**4.500**	**114.30**	**2.763**	**70.19**	**2.580**	**65.53**	**221.71**	**986.20**	**127.67**	**22.34**	**C1704-225-4500-S**	**3.087**	**78.40**	**156.89**	**697.89**	**111.02**	**19.43**
C1704-225-4750-M	**1.704**	**43.28**	**0.225**	**5.72**	**4.750**	**120.65**	**2.906**	**73.82**	**2.710**	**68.83**	**221.71**	**986.20**	**120.25**	**21.04**	**C1704-225-4750-S**	**3.250**	**82.54**	**156.89**	**697.89**	**104.56**	**18.30**
C1704-225-5000-M	**1.704**	**43.28**	**0.225**	**5.72**	**5.000**	**127.00**	**3.049**	**77.44**	**2.840**	**72.13**	**221.71**	**986.20**	**113.64**	**19.89**	**C1704-225-5000-S**	**3.412**	**86.67**	**156.89**	**697.89**	**98.82**	**17.29**
C1704-225-5250-M	**1.704**	**43.28**	**0.225**	**5.72**	**5.250**	**133.35**	**3.192**	**81.07**	**2.970**	**75.44**	**221.71**	**986.20**	**107.72**	**18.85**	**C1704-225-5250-S**	**3.575**	**90.81**	**156.89**	**697.89**	**93.67**	**16.39**
C1704-225-5500-M	**1.704**	**43.28**	**0.225**	**5.72**	**5.500**	**139.70**	**3.335**	**84.70**	**3.100**	**78.74**	**221.71**	**986.20**	**102.39**	**17.92**	**C1704-225-5500-S**	**3.738**	**94.94**	**156.89**	**697.89**	**89.03**	**15.58**
C1704-225-5750-M	**1.704**	**43.28**	**0.225**	**5.72**	**5.750**	**146.05**	**3.477**	**88.33**	**3.230**	**82.05**	**221.71**	**986.20**	**97.56**	**17.07**	**C1704-225-5750-S**	**3.901**	**99.07**	**156.89**	**697.89**	**84.83**	**14.85**
C1704-225-6000-M	**1.704**	**43.28**	**0.225**	**5.72**	**6.000**	**152.40**	**3.620**	**91.95**	**3.360**	**85.35**	**221.71**	**986.20**	**93.16**	**16.30**	**C1704-225-6000-S**	**4.063**	**103.21**	**156.89**	**697.89**	**81.01**	**14.18**
C1704-225-6250-M	**1.704**	**43.28**	**0.225**	**5.72**	**6.250**	**158.75**	**3.763**	**95.58**	**3.490**	**88.65**	**221.71**	**986.20**	**89.15**	**15.60**	**C1704-225-6250-S**	**4.226**	**107.34**	**156.89**	**697.89**	**77.52**	**13.57**
C1704-225-6500-M	**1.704**	**43.28**	**0.225**	**5.72**	**6.500**	**165.10**	**3.906**	**99.21**	**3.620**	**91.96**	**221.71**	**986.20**	**85.46**	**14.96**	**C1704-225-6500-S**	**4.389**	**111.48**	**156.89**	**697.89**	**74.32**	**13.01**
C1704-225-6750-M	**1.704**	**43.28**	**0.225**	**5.72**	**6.750**	**171.45**	**4.049**	**102.84**	**3.751**	**95.26**	**221.71**	**986.20**	**82.07**	**14.36**	**C1704-225-6750-S**	**4.552**	**115.61**	**156.89**	**697.89**	**71.37**	**12.49**
C1704-225-7000-M	**1.704**	**43.28**	**0.225**	**5.72**	**7.000**	**177.80**	**4.191**	**106.46**	**3.881**	**98.57**	**221.71**	**986.20**	**78.94**	**13.81**	**C1704-225-7000-S**	**4.714**	**119.74**	**156.89**	**697.89**	**68.64**	**12.01**
C1704-225-7500-M	**1.704**	**43.28**	**0.225**	**5.72**	**7.500**	**190.50**	**4.477**	**113.72**	**4.141**	**105.18**	**221.71**	**986.20**	**73.34**	**12.83**	**C1704-225-7500-S**	**5.040**	**128.01**	**156.89**	**697.89**	**63.78**	**11.16**
C1704-225-8000-M	**1.704**	**43.28**	**0.225**	**5.72**	**8.000**	**203.20**	**4.763**	**120.97**	**4.401**	**111.78**	**221.71**	**986.20**	**68.48**	**11.98**	**C1704-225-8000-S**	**5.365**	**136.28**	**156.89**	**697.89**	**59.55**	**10.42**
C1704-225-8500-M	**1.704**	**43.28**	**0.225**	**5.72**	**8.500**	**215.90**	**5.048**	**128.23**	**4.661**	**118.39**	**221.71**	**986.20**	**64.23**	**11.24**	**C1704-225-8500-S**	**5.691**	**144.55**	**156.89**	**697.89**	**55.85**	**9.77**
C1704-225-9000-M	**1.704**	**43.28**	**0.225**	**5.72**	**9.000**	**228.60**	**5.334**	**135.48**	**4.921**	**125.00**	**221.71**	**986.20**	**60.47**	**10.58**	**C1704-225-9000-S**	**6.016**	**152.82**	**156.89**	**697.89**	**52.59**	**9.20**
C1704-225-9500-M	**1.704**	**43.28**	**0.225**	**5.72**	**9.500**	**241.30**	**5.619**	**142.73**	**5.181**	**131.61**	**221.71**	**986.20**	**57.13**	**10.00**	**C1704-225-9500-S**	**6.342**	**161.09**	**156.89**	**697.89**	**49.68**	**8.69**
C1704-250-2375-M	**1.704**	**43.28**	**0.250**	**6.35**	**2.375**	**60.33**	**1.686**	**42.82**	**1.642**	**41.71**	**295.85**	**1316.02**	**429.20**	**75.11**	**C1704-250-2375-S**	**1.824**	**46.34**	**205.53**	**914.23**	**373.22**	**65.31**
C1704-250-2500-M	**1.704**	**43.28**	**0.250**	**6.35**	**2.500**	**63.50**	**1.765**	**44.82**	**1.717**	**43.60**	**295.85**	**1316.02**	**402.37**	**70.42**	**C1704-250-2500-S**	**1.913**	**48.58**	**205.53**	**914.23**	**349.89**	**61.23**
C1704-250-2625-M	**1.704**	**43.28**	**0.250**	**6.35**	**2.625**	**66.68**	**1.844**	**46.83**	**1.791**	**45.50**	**295.85**	**1316.02**	**378.70**	**66.27**	**C1704-250-2625-S**	**2.001**	**50.82**	**205.53**	**914.23**	**329.31**	**57.63**
C1704-250-2750-M	**1.704**	**43.28**	**0.250**	**6.35**	**2.750**	**69.85**	**1.923**	**48.84**	**1.866**	**47.39**	**295.85**	**1316.02**	**357.67**	**62.59**	**C1704-250-2750-S**	**2.089**	**53.06**	**205.53**	**914.23**	**311.01**	**54.43**
C1704-250-2875-M	**1.704**	**43.28**	**0.250**	**6.35**	**2.875**	**73.03**	**2.002**	**50.85**	**1.940**	**49.28**	**295.85**	**1316.02**	**338.84**	**59.30**	**C1704-250-2875-S**	**2.177**	**55.31**	**205.53**	**914.23**	**294.64**	**51.56**
C1704-250-3000-M	**1.704**	**43.28**	**0.250**	**6.35**	**3.000**	**76.20**	**2.081**	**52.86**	**2.015**	**51.17**	**295.85**	**1316.02**	**321.90**	**56.33**	**C1704-250-3000-S**	**2.266**	**57.55**	**205.53**	**914.23**	**279.91**	**48.98**
C1704-250-3250-M	**1.704**	**43.28**	**0.250**	**6.35**	**3.250**	**82.55**	**2.239**	**56.87**	**2.164**	**54.96**	**295.85**	**1316.02**	**292.64**	**51.21**	**C1704-250-3250-S**	**2.442**	**62.03**	**205.53**	**914.23**	**254.47**	**44.53**
C1704-250-3500-M	**1.704**	**43.28**	**0.250**	**6.35**	**3.500**	**88.90**	**2.397**	**60.89**	**2.313**	**58.74**	**295.85**	**1316.02**	**268.25**	**46.94**	**C1704-250-3500-S**	**2.619**	**66.52**	**205.53**	**914.23**	**233.26**	**40.82**
C1704-250-3750-M	**1.704**	**43.28**	**0.250**	**6.35**	**3.750**	**95.25**	**2.555**	**64.90**	**2.462**	**62.52**	**295.85**	**1316.02**	**247.61**	**43.33**	**C1704-250-3750-S**	**2.795**	**71.00**	**205.53**	**914.23**	**215.32**	**37.68**
C1704-250-4000-M	**1.704**	**43.28**	**0.250**	**6.35**	**4.000**	**101.60**	**2.713**	**68.92**	**2.611**	**66.31**	**295.85**	**1316.02**	**229.93**	**40.24**	**C1704-250-4000-S**	**2.972**	**75.49**	**205.53**	**914.23**	**199.94**	**34.99**
C1704-250-4250-M	**1.704**	**43.28**	**0.250**	**6.35**	**4.250**	**107.95**	**2.871**	**72.93**	**2.759**	**70.09**	**295.85**	**1316.02**	**214.60**	**37.55**	**C1704-250-4250-S**	**3.149**	**79.97**	**205.53**	**914.23**	**186.61**	**32.66**
C1704-250-4500-M	**1.704**	**43.28**	**0.250**	**6.35**	**4.500**	**114.30**	**3.029**	**76.95**	**2.908**	**73.87**	**295.85**	**1316.02**	**201.19**	**35.21**	**C1704-250-4500-S**	**3.325**	**84.46**	**205.53**	**914.23**	**174.95**	**30.62**
C1704-250-4750-M	**1.704**	**43.28**	**0.250**	**6.35**	**4.750**	**120.65**	**3.188**	**80.96**	**3.057**	**77.66**	**295.85**	**1316.02**	**189.35**	**33.14**	**C1704-250-4750-S**	**3.502**	**88.94**	**205.53**	**914.23**	**164.65**	**28.81**
C1704-250-5000-M	**1.704**	**43.28**	**0.250**	**6.35**	**5.000**	**127.00**	**3.346**	**84.98**	**3.206**	**81.44**	**295.85**	**1316.02**	**178.83**	**31.30**	**C1704-250-5000-S**	**3.678**	**93.43**	**205.53**	**914.23**	**155.51**	**27.21**
C1704-250-5250-M	**1.704**	**43.28**	**0.250**	**6.35**	**5.250**	**133.35**	**3.504**	**88.99**	**3.355**	**85.23**	**295.85**	**1316.02**	**169.42**	**29.65**	**C1704-250-5250-S**	**3.855**	**97.91**	**205.53**	**914.23**	**147.32**	**25.78**
C1704-250-5500-M	**1.704**	**43.28**	**0.250**	**6.35**	**5.500**	**139.70**	**3.662**	**93.01**	**3.504**	**89.01**	**295.85**	**1316.02**	**160.95**	**28.17**	**C1704-250-5500-S**	**4.031**	**102.40**	**205.53**	**914.23**	**139.96**	**24.49**
C1704-250-5750-M	**1.704**	**43.28**	**0.250**	**6.35**	**5.750**	**146.05**	**3.820**	**97.03**	**3.653**	**92.79**	**295.85**	**1316.02**	**153.29**	**26.82**	**C1704-250-5750-S**	**4.208**	**106.88**	**205.53**	**914.23**	**133.29**	**23.33**
C1704-250-6000-M	**1.704**	**43.28**	**0.250**	**6.35**	**6.000**	**152.40**	**3.978**	**101.04**	**3.802**	**96.58**	**295.85**	**1316.02**	**146.32**	**25.61**	**C1704-250-6000-S**	**4.385**	**111.37**	**205.53**	**914.23**	**127.23**	**22.27**
C1704-250-6250-M	**1.704**	**43.28**	**0.250**	**6.35**	**6.250**	**158.75**	**4.136**	**105.06**	**3.951**	**100.36**	**295.85**	**1316.02**	**139.96**	**24.49**	**C1704-250-6250-S**	**4.561**	**115.85**	**205.53**	**914.23**	**121.70**	**21.30**
C1704-250-6500-M	**1.704**	**43.28**	**0.250**	**6.35**	**6.500**	**165.10**	**4.294**	**109.07**	**4.100**	**104.14**	**295.85**	**1316.02**	**134.12**	**23.47**	**C1704-250-6500-S**	**4.738**	**120.34**	**205.53**	**914.23**	**116.63**	**20.41**
C1704-250-6750-M	**1.704**	**43.28**	**0.250**	**6.35**	**6.750**	**171.45**	**4.452**	**113.09**	**4.249**	**107.93**	**295.85**	**1316.02**	**128.76**	**22.53**	**C1704-250-6750-S**	**4.914**	**124.82**	**205.53**	**914.23**	**111.97**	**19.59**
C1704-250-7000-M	**1.704**	**43.28**	**0.250**	**6.35**	**7.000**	**177.80**	**4.610**	**117.10**	**4.398**	**111.71**	**295.85**	**1316.02**	**123.81**	**21.67**	**C1704-250-7000-S**	**5.091**	**129.31**	**205.53**	**914.23**	**107.66**	**18.84**
C1704-250-7500-M	**1.704**	**43.28**	**0.250**	**6.35**	**7.500**	**190.50**	**4.927**	**125.13**	**4.696**	**119.28**	**295.85**	**1316.02**	**114.96**	**20.12**	**C1704-250-7500-S**	**5.444**	**138.28**	**205.53**	**914.23**	**99.97**	**17.49**
C1704-250-8000-M	**1.704**	**43.28**	**0.250**	**6.35**	**8.000**	**203.20**	**5.243**	**133.17**	**4.994**	**126.85**	**295.85**	**1316.02**	**107.30**	**18.78**	**C1704-250-8000-S**	**5.797**	**147.25**	**205.53**	**914.23**	**93.30**	**16.33**
C1704-250-8500-M	**1.704**	**43.28**	**0.250**	**6.35**	**8.500**	**215.90**	**5.559**	**141.20**	**5.292**	**134.41**	**295.85**	**1316.02**	**100.59**	**17.60**	**C1704-250-8500-S**	**6.150**	**156.22**	**205.53**	**914.23**	**87.47**	**15.31**
C1704-250-9000-M	**1.704**	**43.28**	**0.250**	**6.35**	**9.000**	**228.60**	**5.875**	**149.23**	**5.590**	**141.98**	**295.85**	**1316.02**	**94.68**	**16.57**	**C1704-250-9000-S**	**6.504**	**165.19**	**205.53**	**914.23**	**82.33**	**14.41**
C1704-250-9500-M	**1.704**	**43.28**	**0.250**	**6.35**	**9.500**	**241.30**	**6.191**	**157.26**	**5.888**	**149.55**	**295.85**	**1316.02**	**89.42**	**15.65**	**C1704-250-9500-S**	**6.857**	**174.16**	**205.53**	**914.23**	**77.75**	**13.61**
D13680	1.732	44.00	0.157	4.00	2.795	71.00	0.992	25.20	0.866	22.00	119.71	532.50	66.69	11.67	D23680	0.992	25.20	99.76	443.75	55.54	9.72
D13690	1.732	44.00	0.157	4.00	4.134	105.00	1.382	35.10	1.181	30.00	119.71	532.50	42.29	7.40	D23690	1.382	35.10	99.76	443.75	35.20	6.16
D13700	1.732	44.00	0.157	4.00	6.299	160.00	1.969	50.00	1.654	42.00	119.71	532.50	27.37	4.79	D23700	1.969	50.00	99.76	443.75	22.80	3.99
D13710	1.732	44.00	0.157	4.00	9.252	235.00	2.748	69.80	2.283	58.00	119.71	532.50	18.63	3.26	D23710	2.748	69.80	99.76	443.75	15.54	2.72
D13720	1.732	44.00	0.157	4.00	13.386	340.00	3.921	99.60	3.228	82.00	119.71	532.50	12.57	2.20	D23720	3.921	99.60	99.76	443.75	10.46	1.83
C1763-148-2875-M	**1.763**	**44.78**	**0.148**	**3.76**	**2.875**	**73.03**	**1.196**	**30.38**	**0.945**	**24.00**	**67.38**	**299.72**	**40.13**	**7.02**	**C1763-148-2875-S**	**1.426**	**36.22**	**50.57**	**224.94**	**34.90**	**6.11**
C1763-148-3000-M	**1.763**	**44.78**	**0.148**	**3.76**	**3.000**	**76.20**	**1.240**	**31.49**	**0.976**	**24.78**	**67.38**	**299.72**	**38.28**	**6.70**	**C1763-148-3000-S**	**1.481**	**37.61**	**50.57**	**224.94**	**33.29**	**5.82**
C1763-148-3250-M	**1.763**	**44.78**	**0.148**	**3.76**	**3.250**	**82.55**	**1.327**	**33.70**	**1.037**	**26.34**	**67.38**	**299.72**	**35.04**	**6.13**	**C1763-148-3250-S**	**1.590**	**40.39**	**50.57**	**224.94**	**30.47**	**5.33**
C1763-148-3500-M	**1.763**	**44.78**	**0.148**	**3.76**	**3.500**	**88.90**	**1.414**	**35.92**	**1.098**	**27.90**	**67.38**	**299.72**	**32.30**	**5.65**	**C1763-148-3500-S**	**1.700**	**43.18**	**50.57**	**224.94**	**28.09**	**4.92**
C1763-148-3750-M	**1.763**	**44.78**	**0.148**	**3.76**	**3.750**	**95.25**	**1.501**	**38.14**	**1.160**	**29.46**	**67.38**	**299.72**	**29.97**	**5.24**	**C1763-148-3750-S**	**1.809**	**45.96**	**50.57**	**224.94**	**26.06**	**4.56**
C1763-148-4000-M	**1.763**	**44.78**	**0.148**	**3.76**	**4.000**	**101.60**	**1.589**	**40.35**	**1.221**	**31.02**	**67.38**	**299.72**	**27.94**	**4.89**	**C1763-148-4000-S**	**1.919**	**48.74**	**50.57**	**224.94**	**24.30**	**4.25**
C1763-148-4250-M	**1.763**	**44.78**	**0.148**	**3.76**	**4.250**	**107.95**	**1.676**	**42.57**	**1.283**	**32.58**	**67.38**	**299.72**	**26.18**	**4.58**	**C1763-148-4250-S**	**2.028**	**51.52**	**50.57**	**224.94**	**22.76**	**3.98**

Part Numbers with an "*" are squared and not ground. **Part Numbers in bold** represent the newly expanded Associated Spring RAYMOND compression spring offering.

MUSIC WIRE															STAINLESS STEEL					
Catalog #	Outside Diameter (OD)		Wire Diameter (d)		Free Length (L) Approx		Load Length (L_1)		Solid Height (Sh) Approx		Load (P) at L_1		Spring Rate (R)		Catalog #	Load Length (L_1)		Load (P) at L_1		Spring Rate (R)	
	in	mm	in	mm	in	mm	in	mm	in	mm	lb	N	lb/in	N/mm		in	mm	lb	N	lb/in	N/mm
C1763-148-4500-M	1.763	44.78	0.148	3.76	4.500	114.30	1.763	44.79	1.344	34.14	67.38	299.72	24.62	4.31	**C1763-148-4500-S**	2.138	54.30	50.57	224.94	21.41	3.75
C1763-148-4750-M	1.763	44.78	0.148	3.76	4.750	120.65	1.850	47.00	1.406	35.71	67.38	299.72	23.24	4.07	**C1763-148-4750-S**	2.248	57.09	50.57	224.94	20.21	3.54
C1763-148-5000-M	1.763	44.78	0.148	3.76	5.000	127.00	1.938	49.22	1.467	37.27	67.38	299.72	22.00	3.85	**C1763-148-5000-S**	2.357	59.87	50.57	224.94	19.13	3.35
C1763-148-5250-M	1.763	44.78	0.148	3.76	5.250	133.35	2.025	51.43	1.529	38.83	67.38	299.72	20.89	3.66	**C1763-148-5250-S**	2.467	62.65	50.57	224.94	18.17	3.18
C1763-148-5500-M	1.763	44.78	0.148	3.76	5.500	139.70	2.112	53.65	1.590	40.39	67.38	299.72	19.89	3.48	**C1763-148-5500-S**	2.576	65.43	50.57	224.94	17.30	3.03
C1763-148-5750-M	1.763	44.78	0.148	3.76	5.750	146.05	2.199	55.87	1.652	41.95	67.38	299.72	18.98	3.32	**C1763-148-5750-S**	2.686	68.22	50.57	224.94	16.50	2.89
C1763-148-6000-M	1.763	44.78	0.148	3.76	6.000	152.40	2.287	58.08	1.713	43.51	67.38	299.72	18.15	3.18	**C1763-148-6000-S**	2.795	71.00	50.57	224.94	15.78	2.76
C1763-148-6250-M	1.763	44.78	0.148	3.76	6.250	158.75	2.374	60.30	1.774	45.07	67.38	299.72	17.38	3.04	**C1763-148-6250-S**	2.905	73.78	50.57	224.94	15.12	2.65
C1763-148-6500-M	1.763	44.78	0.148	3.76	6.500	165.10	2.461	62.52	1.836	46.63	67.38	299.72	16.68	2.92	**C1763-148-6500-S**	3.014	76.56	50.57	224.94	14.51	2.54
C1763-148-6750-M	1.763	44.78	0.148	3.76	6.750	171.45	2.548	64.73	1.897	48.19	67.38	299.72	16.04	2.81	**C1763-148-6750-S**	3.124	79.35	50.57	224.94	13.95	2.44
C1763-148-7000-M	1.763	44.78	0.148	3.76	7.000	177.80	2.636	66.95	1.959	49.75	67.38	299.72	15.44	2.70	**C1763-148-7000-S**	3.233	82.13	50.57	224.94	13.43	2.35
C1763-148-7500-M	1.763	44.78	0.148	3.76	7.500	190.50	2.810	71.38	2.082	52.88	67.38	299.72	14.37	2.51	**C1763-148-7500-S**	3.452	87.69	50.57	224.94	12.49	2.19
C1763-148-8000-M	1.763	44.78	0.148	3.76	8.000	203.20	2.985	75.81	2.205	56.00	67.38	299.72	13.44	2.35	**C1763-148-8000-S**	3.672	93.26	50.57	224.94	11.68	2.04
C1763-148-8500-M	1.763	44.78	0.148	3.76	8.500	215.90	3.159	80.24	2.328	59.12	67.38	299.72	12.62	2.21	**C1763-148-8500-S**	3.891	98.82	50.57	224.94	10.97	1.92
C1763-148-9000-M	1.763	44.78	0.148	3.76	9.000	228.60	3.334	84.68	2.451	62.24	67.38	299.72	11.89	2.08	**C1763-148-9000-S**	4.110	104.39	50.57	224.94	10.34	1.81
C1763-148-9500-M*	1.763	44.78	0.148	3.76	9.500	241.30	3.605	91.56	2.692	68.39	67.38	299.72	11.43	2.00	**C1763-148-9500-S***	4.412	112.06	50.57	224.94	9.94	1.74
C1763-162-2750-M	1.763	44.78	0.162	4.12	2.750	69.85	1.259	31.99	1.046	26.58	86.63	385.36	58.12	10.17	**C1763-162-2750-S**	1.477	37.52	64.32	286.11	50.54	8.84
C1763-162-2875-M	1.763	44.78	0.162	4.12	2.875	73.03	1.308	33.22	1.083	27.50	86.63	385.36	55.27	9.67	**C1763-162-2875-S**	1.537	39.03	64.32	286.11	48.06	8.41
C1763-162-3000-M	1.763	44.78	0.162	4.12	3.000	76.20	1.356	34.44	1.119	28.42	86.63	385.36	52.69	9.22	**C1763-162-3000-S**	1.596	40.54	64.32	286.11	45.82	8.02
C1763-162-3250-M	1.763	44.78	0.162	4.12	3.250	82.55	1.452	36.89	1.192	30.27	86.63	385.36	48.19	8.43	**C1763-162-3250-S**	1.715	43.56	64.32	286.11	41.90	7.33
C1763-162-3500-M	1.763	44.78	0.162	4.12	3.500	88.90	1.549	39.34	1.265	32.12	86.63	385.36	44.40	7.77	**C1763-162-3500-S**	1.834	46.58	64.32	286.11	38.61	6.76
C1763-162-3750-M	1.763	44.78	0.162	4.12	3.750	95.25	1.645	41.79	1.337	33.97	86.63	385.36	41.16	7.20	**C1763-162-3750-S**	1.953	49.60	64.32	286.11	35.79	6.26
C1763-162-4000-M	1.763	44.78	0.162	4.12	4.000	101.60	1.742	44.23	1.410	35.82	86.63	385.36	38.36	6.71	**C1763-162-4000-S**	2.072	52.62	64.32	286.11	33.36	5.84
C1763-162-4250-M	1.763	44.78	0.162	4.12	4.250	107.95	1.838	46.68	1.483	37.66	86.63	385.36	35.92	6.29	**C1763-162-4250-S**	2.190	55.64	64.32	286.11	31.23	5.47
C1763-162-4500-M	1.763	44.78	0.162	4.12	4.500	114.30	1.934	49.13	1.556	39.51	86.63	385.36	33.77	5.91	**C1763-162-4500-S**	2.309	58.66	64.32	286.11	29.36	5.14
C1763-162-4750-M	1.763	44.78	0.162	4.12	4.750	120.65	2.031	51.58	1.628	41.36	86.63	385.36	31.86	5.58	**C1763-162-4750-S**	2.428	61.68	64.32	286.11	27.70	4.85
C1763-162-5000-M	1.763	44.78	0.162	4.12	5.000	127.00	2.127	54.03	1.701	43.21	86.63	385.36	30.16	5.28	**C1763-162-5000-S**	2.547	64.69	64.32	286.11	26.22	4.59
C1763-162-5250-M	1.763	44.78	0.162	4.12	5.250	133.35	2.224	56.48	1.774	45.06	86.63	385.36	28.62	5.01	**C1763-162-5250-S**	2.666	67.71	64.32	286.11	24.89	4.36
C1763-162-5500-M	1.763	44.78	0.162	4.12	5.500	139.70	2.320	58.93	1.847	46.91	86.63	385.36	27.24	4.77	**C1763-162-5500-S**	2.785	70.73	64.32	286.11	23.69	4.15
C1763-162-5750-M	1.763	44.78	0.162	4.12	5.750	146.05	2.416	61.37	1.919	48.75	86.63	385.36	25.99	4.55	**C1763-162-5750-S**	2.904	73.75	64.32	286.11	22.60	3.95
C1763-162-6000-M	1.763	44.78	0.162	4.12	6.000	152.40	2.513	63.82	1.992	50.60	86.63	385.36	24.84	4.35	**C1763-162-6000-S**	3.022	76.77	64.32	286.11	21.60	3.78
C1763-162-6250-M	1.763	44.78	0.162	4.12	6.250	158.75	2.609	66.27	2.065	52.45	86.63	385.36	23.79	4.16	**C1763-162-6250-S**	3.141	79.79	64.32	286.11	20.69	3.62
C1763-162-6500-M	1.763	44.78	0.162	4.12	6.500	165.10	2.706	68.72	2.138	54.30	86.63	385.36	22.83	4.00	**C1763-162-6500-S**	3.260	82.81	64.32	286.11	19.85	3.47
C1763-162-6750-M	1.763	44.78	0.162	4.12	6.750	171.45	2.802	71.17	2.210	56.15	86.63	385.36	21.94	3.84	**C1763-162-6750-S**	3.379	85.83	64.32	286.11	19.08	3.34
C1763-162-7000-M	1.763	44.78	0.162	4.12	7.000	177.80	2.898	73.62	2.283	57.99	86.63	385.36	21.12	3.70	**C1763-162-7000-S**	3.498	88.85	64.32	286.11	18.37	3.21
C1763-162-7500-M*	1.763	44.78	0.162	4.12	7.500	190.50	3.191	81.04	2.552	64.81	86.63	385.36	20.10	3.52	**C1763-162-7500-S***	3.821	97.04	64.32	286.11	17.48	3.06
C1763-162-8000-M*	1.763	44.78	0.162	4.12	8.000	203.20	3.383	85.94	2.697	68.51	86.63	385.36	18.77	3.28	**C1763-162-8000-S***	4.058	103.08	64.32	286.11	16.32	2.86
C1763-162-8500-M*	1.763	44.78	0.162	4.12	8.500	215.90	3.576	90.84	2.843	72.21	86.63	385.36	17.60	3.08	**C1763-162-8500-S***	4.296	109.12	64.32	286.11	15.30	2.68
C1763-162-9000-M*	1.763	44.78	0.162	4.12	9.000	228.60	3.769	95.73	2.988	75.90	86.63	385.36	16.56	2.90	**C1763-162-9000-S***	4.534	115.15	64.32	286.11	14.40	2.52
C1763-162-9500-M*	1.763	44.78	0.162	4.12	9.500	241.30	3.962	100.63	3.134	79.60	86.63	385.36	15.64	2.74	**C1763-162-9500-S***	4.771	121.19	64.32	286.11	13.60	2.38
C1763-177-2625-M	1.763	44.78	0.177	4.50	2.625	66.68	1.321	33.55	1.145	29.10	110.76	492.70	84.94	14.87	**C1763-177-2625-S**	1.524	38.72	81.29	361.62	73.87	12.93
C1763-177-2750-M	1.763	44.78	0.177	4.50	2.750	69.85	1.374	34.91	1.188	30.18	110.76	492.70	80.51	14.09	**C1763-177-2750-S**	1.589	40.36	81.29	361.62	70.01	12.25
C1763-177-2875-M	1.763	44.78	0.177	4.50	2.875	73.03	1.428	36.26	1.231	31.26	110.76	492.70	76.52	13.39	**C1763-177-2875-S**	1.653	41.99	81.29	361.62	66.54	11.64
C1763-177-3000-M	1.763	44.78	0.177	4.50	3.000	76.20	1.481	37.61	1.273	32.34	110.76	492.70	72.91	12.76	**C1763-177-3000-S**	1.718	43.63	81.29	361.62	63.40	11.09
C1763-177-3250-M	1.763	44.78	0.177	4.50	3.250	82.55	1.587	40.31	1.358	34.50	110.76	492.70	66.61	11.66	**C1763-177-3250-S**	1.847	46.90	81.29	361.62	57.92	10.14
C1763-177-3500-M	1.763	44.78	0.177	4.50	3.500	88.90	1.694	43.02	1.444	36.67	110.76	492.70	61.32	10.73	**C1763-177-3500-S**	1.975	50.17	81.29	361.62	53.32	9.33
C1763-177-3750-M	1.763	44.78	0.177	4.50	3.750	95.25	1.800	45.72	1.529	38.83	110.76	492.70	56.81	9.94	**C1763-177-3750-S**	2.104	53.45	81.29	361.62	49.40	8.64
C1763-177-4000-M	1.763	44.78	0.177	4.50	4.000	101.60	1.907	48.43	1.614	41.00	110.76	492.70	52.91	9.26	**C1763-177-4000-S**	2.233	56.72	81.29	361.62	46.01	8.05
C1763-177-4250-M	1.763	44.78	0.177	4.50	4.250	107.95	2.013	51.13	1.699	43.16	110.76	492.70	49.52	8.67	**C1763-177-4250-S**	2.362	59.99	81.29	361.62	43.06	7.53
C1763-177-4500-M	1.763	44.78	0.177	4.50	4.500	114.30	2.119	53.83	1.784	45.32	110.76	492.70	46.53	8.14	**C1763-177-4500-S**	2.491	63.26	81.29	361.62	40.46	7.08
C1763-177-4750-M	1.763	44.78	0.177	4.50	4.750	120.65	2.226	56.54	1.870	47.49	110.76	492.70	43.88	7.68	**C1763-177-4750-S**	2.620	66.54	81.29	361.62	38.16	6.68
C1763-177-5000-M	1.763	44.78	0.177	4.50	5.000	127.00	2.332	59.24	1.955	49.65	110.76	492.70	41.52	7.27	**C1763-177-5000-S**	2.748	69.81	81.29	361.62	36.11	6.32
C1763-177-5250-M	1.763	44.78	0.177	4.50	5.250	133.35	2.439	61.95	2.040	51.81	110.76	492.70	39.40	6.90	**C1763-177-5250-S**	2.877	73.08	81.29	361.62	34.26	6.00
C1763-177-5500-M	1.763	44.78	0.177	4.50	5.500	139.70	2.545	64.65	2.125	53.98	110.76	492.70	37.49	6.56	**C1763-177-5500-S**	3.006	76.36	81.29	361.62	32.60	5.70
C1763-177-5750-M	1.763	44.78	0.177	4.50	5.750	146.05	2.652	67.35	2.210	56.14	110.76	492.70	35.75	6.26	**C1763-177-5750-S**	3.135	79.63	81.29	361.62	31.09	5.44
C1763-177-6000-M	1.763	44.78	0.177	4.50	6.000	152.40	2.758	70.06	2.295	58.30	110.76	492.70	34.17	5.98	**C1763-177-6000-S**	3.264	82.90	81.29	361.62	29.71	5.20
C1763-177-6250-M	1.763	44.78	0.177	4.50	6.250	158.75	2.865	72.76	2.381	60.47	110.76	492.70	32.72	5.73	**C1763-177-6250-S**	3.393	86.17	81.29	361.62	28.45	4.98
C1763-177-6500-M	1.763	44.78	0.177	4.50	6.500	165.10	2.971	75.47	2.466	62.63	110.76	492.70	31.39	5.49	**C1763-177-6500-S**	3.521	89.45	81.29	361.62	27.29	4.78
C1763-177-6750-M*	1.763	44.78	0.177	4.50	6.750	171.45	3.179	80.75	2.677	67.98	110.76	492.70	31.02	5.43	**C1763-177-6750-S***	3.736	94.90	81.29	361.62	26.97	4.72
C1763-177-7000-M*	1.763	44.78	0.177	4.50	7.000	177.80	3.286	83.46	2.762	70.15	110.76	492.70	29.82	5.22	**C1763-177-7000-S***	3.865	98.17	81.29	361.62	25.93	4.54
C1763-177-7500-M*	1.763	44.78	0.177	4.50	7.500	190.50	3.499	88.86	2.932	74.47	110.76	492.70	27.68	4.84	**C1763-177-7500-S***	4.123	104.71	81.29	361.62	24.07	4.21
C1763-177-8000-M*	1.763	44.78	0.177	4.50	8.000	203.20	3.711	94.27	3.102	78.80	110.76	492.70	25.83	4.52	**C1763-177-8000-S***	4.380	111.26	81.29	361.62	22.46	3.93
C1763-177-8500-M*	1.763	44.78	0.177	4.50	8.500	215.90	3.924	99.68	3.273	83.13	110.76	492.70	24.21	4.24	**C1763-177-8500-S***	4.638	117.81	81.29	361.62	21.05	3.68
C1763-177-9000-M*	1.763	44.78	0.177	4.50	9.000	228.60	4.137	105.09	3.443	87.46	110.76	492.70	22.78	3.99	**C1763-177-9000-S***	4.896	124.35	81.29	361.62	19.81	3.47

FOR INFORMATION ON ALTERNATIVE FINISHES, SEE PAGE 311

Part Numbers with an "*" are squared and not ground. **Part Numbers in bold** represent the newly expanded Associated Spring RAYMOND compression spring offering.

MUSIC WIRE															STAINLESS STEEL						
Catalog #	Outside Diameter (OD)		Wire Diameter (d)		Free Length (L) Approx		Load Length (L_1)		Solid Height (Sh) Approx		Load (P) at L_1		Spring Rate (R)		Catalog #	Load Length (L_1)		Load (P) at L_1		Spring Rate (R)	
	in	mm	in	mm	in	mm	in	mm	in	mm	lb	N	lb/in	N/mm		in	mm	lb	N	lb/in	N/mm
C1763-177-9500-M*	1.763	44.78	0.177	4.50	9.500	241.30	4.350	110.50	3.613	91.78	110.76	492.70	21.51	3.76	**C1763-177-9500-S***	5.153	130.90	81.29	361.62	18.70	3.27
C1763-192-2500-M	1.763	44.78	0.192	4.88	2.500	63.50	1.371	34.82	1.230	31.24	138.74	617.17	122.86	21.50	**C1763-192-2500-S**	1.558	39.57	100.67	447.79	106.83	18.70
C1763-192-2625-M	1.763	44.78	0.192	4.88	2.625	66.68	1.429	36.30	1.279	32.48	138.74	617.17	116.00	20.30	**C1763-192-2625-S**	1.627	41.33	100.67	447.79	100.87	17.65
C1763-192-2750-M	1.763	44.78	0.192	4.88	2.750	69.85	1.487	37.78	1.328	33.72	138.74	617.17	109.88	19.23	**C1763-192-2750-S**	1.696	43.09	100.67	447.79	95.54	16.72
C1763-192-2875-M	1.763	44.78	0.192	4.88	2.875	73.03	1.546	39.26	1.376	34.96	138.74	617.17	104.36	18.26	**C1763-192-2875-S**	1.766	44.85	100.67	447.79	90.75	15.88
C1763-192-3000-M	1.763	44.78	0.192	4.88	3.000	76.20	1.604	40.74	1.425	36.20	138.74	617.17	99.38	17.39	**C1763-192-3000-S**	1.835	46.61	100.67	447.79	86.41	15.12
C1763-192-3250-M	1.763	44.78	0.192	4.88	3.250	82.55	1.720	43.70	1.523	38.68	138.74	617.17	90.71	15.87	**C1763-192-3250-S**	1.974	50.13	100.67	447.79	78.88	13.80
C1763-192-3500-M	1.763	44.78	0.192	4.88	3.500	88.90	1.837	46.66	1.621	41.16	138.74	617.17	83.43	14.60	**C1763-192-3500-S**	2.112	53.65	100.67	447.79	72.55	12.70
C1763-192-3750-M	1.763	44.78	0.192	4.88	3.750	95.25	1.954	49.62	1.718	43.65	138.74	617.17	77.23	13.52	**C1763-192-3750-S**	2.251	57.18	100.67	447.79	67.16	11.75
C1763-192-4000-M	1.763	44.78	0.192	4.88	4.000	101.60	2.070	52.58	1.816	46.13	138.74	617.17	71.89	12.58	**C1763-192-4000-S**	2.390	60.70	100.67	447.79	62.52	10.94
C1763-192-4250-M	1.763	44.78	0.192	4.88	4.250	107.95	2.187	55.54	1.914	48.61	138.74	617.17	67.24	11.77	**C1763-192-4250-S**	2.528	64.22	100.67	447.79	58.47	10.23
C1763-192-4500-M	1.763	44.78	0.192	4.88	4.500	114.30	2.303	58.50	2.011	51.09	138.74	617.17	63.16	11.05	**C1763-192-4500-S**	2.667	67.74	100.67	447.79	54.92	9.61
C1763-192-4750-M	1.763	44.78	0.192	4.88	4.750	120.65	2.420	61.46	2.109	53.57	138.74	617.17	59.54	10.42	**C1763-192-4750-S**	2.806	71.27	100.67	447.79	51.78	9.06
C1763-192-5000-M	1.763	44.78	0.192	4.88	5.000	127.00	2.536	64.42	2.207	56.05	138.74	617.17	56.32	9.86	**C1763-192-5000-S**	2.944	74.79	100.67	447.79	48.97	8.57
C1763-192-5250-M	1.763	44.78	0.192	4.88	5.250	133.35	2.653	67.39	2.304	58.53	138.74	617.17	53.43	9.35	**C1763-192-5250-S**	3.083	78.31	100.67	447.79	46.46	8.13
C1763-192-5500-M	1.763	44.78	0.192	4.88	5.500	139.70	2.770	70.35	2.402	61.01	138.74	617.17	50.81	8.89	**C1763-192-5500-S**	3.222	81.83	100.67	447.79	44.19	7.73
C1763-192-5750-M	1.763	44.78	0.192	4.88	5.750	146.05	2.886	73.31	2.500	63.49	138.74	617.17	48.45	8.48	**C1763-192-5750-S**	3.360	85.35	100.67	447.79	42.13	7.37
C1763-192-6000-M	1.763	44.78	0.192	4.88	6.000	152.40	3.003	76.27	2.597	65.98	138.74	617.17	46.29	8.10	**C1763-192-6000-S**	3.499	88.88	100.67	447.79	40.25	7.04
C1763-192-6250-M	1.763	44.78	0.192	4.88	6.250	158.75	3.119	79.23	2.695	68.46	138.74	617.17	44.32	7.76	**C1763-192-6250-S**	3.638	92.40	100.67	447.79	38.54	6.74
C1763-192-6500-M	1.763	44.78	0.192	4.88	6.500	165.10	3.236	82.19	2.793	70.94	138.74	617.17	42.51	7.44	**C1763-192-6500-S**	3.776	95.92	100.67	447.79	36.96	6.47
C1763-192-6750-M	1.763	44.78	0.192	4.88	6.750	171.45	3.352	85.15	2.890	73.42	138.74	617.17	40.84	7.15	**C1763-192-6750-S**	3.915	99.44	100.67	447.79	35.51	6.21
C1763-192-7000-M	1.763	44.78	0.192	4.88	7.000	177.80	3.469	88.11	2.988	75.90	138.74	617.17	39.29	6.88	**C1763-192-7000-S**	4.054	102.97	100.67	447.79	34.17	5.98
C1763-192-7500-M*	1.763	44.78	0.192	4.88	7.500	190.50	3.805	96.64	3.310	84.08	138.74	617.17	37.55	6.57	**C1763-192-7500-S***	4.417	112.18	100.67	447.79	32.65	5.71
C1763-192-8000-M*	1.763	44.78	0.192	4.88	8.000	203.20	4.038	102.56	3.505	89.04	138.74	617.17	35.02	6.13	**C1763-192-8000-S***	4.694	119.23	100.67	447.79	30.45	5.33
C1763-192-8500-M*	1.763	44.78	0.192	4.88	8.500	215.90	4.271	108.48	3.701	94.00	138.74	617.17	32.81	5.74	**C1763-192-8500-S***	4.971	126.27	100.67	447.79	28.53	4.99
C1763-192-9000-M*	1.763	44.78	0.192	4.88	9.000	228.60	4.504	114.40	3.896	98.96	138.74	617.17	30.86	5.40	**C1763-192-9000-S***	5.249	133.32	100.67	447.79	26.84	4.70
C1763-192-9500-M*	1.763	44.78	0.192	4.88	9.500	241.30	4.737	120.32	4.092	103.93	138.74	617.17	29.13	5.10	**C1763-192-9500-S***	5.526	140.36	100.67	447.79	25.33	4.43
C1763-207-2500-M	1.763	44.78	0.207	5.26	2.500	63.50	1.470	37.34	1.353	34.36	170.79	759.71	165.84	29.02	**C1763-207-2500-S**	1.650	41.92	122.51	544.95	144.21	25.24
C1763-207-2625-M	1.763	44.78	0.207	5.26	2.625	66.68	1.533	38.95	1.408	35.76	170.79	759.71	156.47	27.38	**C1763-207-2625-S**	1.725	43.80	122.51	544.95	136.06	23.81
C1763-207-2750-M	1.763	44.78	0.207	5.26	2.750	69.85	1.597	40.56	1.463	37.16	170.79	759.71	148.10	25.92	**C1763-207-2750-S**	1.799	45.69	122.51	544.95	128.78	22.54
C1763-207-2875-M	1.763	44.78	0.207	5.26	2.875	73.03	1.660	42.17	1.518	38.56	170.79	759.71	140.57	24.60	**C1763-207-2875-S**	1.873	47.57	122.51	544.95	122.24	21.39
C1763-207-3000-M	1.763	44.78	0.207	5.26	3.000	76.20	1.723	43.77	1.573	39.95	170.79	759.71	133.78	23.41	**C1763-207-3000-S**	1.947	49.45	122.51	544.95	116.33	20.36
C1763-207-3250-M	1.763	44.78	0.207	5.26	3.250	82.55	1.850	46.99	1.683	42.75	170.79	759.71	121.99	21.35	**C1763-207-3250-S**	2.095	53.21	122.51	544.95	106.07	18.56
C1763-207-3500-M	1.763	44.78	0.207	5.26	3.500	88.90	1.976	50.20	1.793	45.54	170.79	759.71	112.10	19.62	**C1763-207-3500-S**	2.243	56.98	122.51	544.95	97.48	17.06
C1763-207-3750-M	1.763	44.78	0.207	5.26	3.750	95.25	2.103	53.42	1.903	48.34	170.79	759.71	103.70	18.15	**C1763-207-3750-S**	2.391	60.74	122.51	544.95	90.18	15.78
C1763-207-4000-M	1.763	44.78	0.207	5.26	4.000	101.60	2.230	56.63	2.013	51.13	170.79	759.71	96.47	16.88	**C1763-207-4000-S**	2.540	64.51	122.51	544.95	83.89	14.68
C1763-207-4250-M	1.763	44.78	0.207	5.26	4.250	107.95	2.356	59.85	2.123	53.93	170.79	759.71	90.19	15.78	**C1763-207-4250-S**	2.688	68.27	122.51	544.95	78.42	13.72
C1763-207-4500-M	1.763	44.78	0.207	5.26	4.500	114.30	2.483	63.06	2.233	56.72	170.79	759.71	84.67	14.82	**C1763-207-4500-S**	2.836	72.03	122.51	544.95	73.62	12.88
C1763-207-4750-M	1.763	44.78	0.207	5.26	4.750	120.65	2.609	66.28	2.343	59.52	170.79	759.71	79.79	13.96	**C1763-207-4750-S**	2.984	75.80	122.51	544.95	69.38	12.14
C1763-207-5000-M	1.763	44.78	0.207	5.26	5.000	127.00	2.736	69.49	2.453	62.31	170.79	759.71	75.44	13.20	**C1763-207-5000-S**	3.132	79.56	122.51	544.95	65.60	11.48
C1763-207-5250-M	1.763	44.78	0.207	5.26	5.250	133.35	2.863	72.71	2.563	65.11	170.79	759.71	71.54	12.52	**C1763-207-5250-S**	3.281	83.33	122.51	544.95	62.21	10.89
C1763-207-5500-M	1.763	44.78	0.207	5.26	5.500	139.70	2.989	75.92	2.673	67.90	170.79	759.71	68.02	11.90	**C1763-207-5500-S**	3.429	87.09	122.51	544.95	59.15	10.35
C1763-207-5750-M	1.763	44.78	0.207	5.26	5.750	146.05	3.116	79.14	2.783	70.70	170.79	759.71	64.83	11.35	**C1763-207-5750-S**	3.577	90.85	122.51	544.95	56.38	9.87
C1763-207-6000-M	1.763	44.78	0.207	5.26	6.000	152.40	3.242	82.35	2.893	73.49	170.79	759.71	61.93	10.84	**C1763-207-6000-S**	3.725	94.62	122.51	544.95	53.85	9.42
C1763-207-6250-M	1.763	44.78	0.207	5.26	6.250	158.75	3.369	85.57	3.003	76.29	170.79	759.71	59.28	10.37	**C1763-207-6250-S**	3.873	98.38	122.51	544.95	51.55	9.02
C1763-207-6500-M	1.763	44.78	0.207	5.26	6.500	165.10	3.495	88.78	3.113	79.08	170.79	759.71	56.84	9.95	**C1763-207-6500-S**	4.022	102.15	122.51	544.95	49.43	8.65
C1763-207-6750-M	1.763	44.78	0.207	5.26	6.750	171.45	3.622	92.00	3.224	81.88	170.79	759.71	54.60	9.56	**C1763-207-6750-S**	4.170	105.91	122.51	544.95	47.48	8.31
C1763-207-7000-M	1.763	44.78	0.207	5.26	7.000	177.80	3.749	95.21	3.334	84.67	170.79	759.71	52.53	9.19	**C1763-207-7000-S**	4.318	109.67	122.51	544.95	45.68	7.99
C1763-207-7500-M	1.763	44.78	0.207	5.26	7.500	190.50	4.002	101.64	3.554	90.26	170.79	759.71	48.82	8.54	**C1763-207-7500-S**	4.614	117.20	122.51	544.95	42.45	7.43
C1763-207-8000-M	1.763	44.78	0.207	5.26	8.000	203.20	4.255	108.08	3.774	95.85	170.79	759.71	45.60	7.98	**C1763-207-8000-S**	4.911	124.73	122.51	544.95	39.66	6.94
C1763-207-8500-M	1.763	44.78	0.207	5.26	8.500	215.90	4.508	114.51	3.994	101.44	170.79	759.71	42.78	7.49	**C1763-207-8500-S**	5.207	132.26	122.51	544.95	37.20	6.51
C1763-207-9000-M	1.763	44.78	0.207	5.26	9.000	228.60	4.761	120.94	4.214	107.03	170.79	759.71	40.29	7.05	**C1763-207-9000-S**	5.503	139.79	122.51	544.95	35.04	6.13
C1763-207-9500-M	1.763	44.78	0.207	5.26	9.500	241.30	5.014	127.37	4.434	112.62	170.79	759.71	38.08	6.66	**C1763-207-9500-S**	5.800	147.31	122.51	544.95	33.11	5.79
C1763-225-2375-M	1.763	44.78	0.225	5.72	2.375	60.33	1.514	38.47	1.431	36.34	214.89	955.87	249.69	43.70	**C1763-225-2375-S**	1.675	42.54	152.07	676.43	217.13	38.00
C1763-225-2500-M	1.763	44.78	0.225	5.72	2.500	63.50	1.584	40.22	1.493	37.92	214.89	955.87	234.47	41.03	**C1763-225-2500-S**	1.754	44.56	152.07	676.43	203.89	35.68
C1763-225-2625-M	1.763	44.78	0.225	5.72	2.625	66.68	1.653	41.98	1.555	39.50	214.89	955.87	220.99	38.67	**C1763-225-2625-S**	1.834	46.58	152.07	676.43	192.17	33.63
C1763-225-2750-M	1.763	44.78	0.225	5.72	2.750	69.85	1.722	43.73	1.617	41.08	214.89	955.87	208.98	36.57	**C1763-225-2750-S**	1.913	48.60	152.07	676.43	181.72	31.80
C1763-225-2875-M	1.763	44.78	0.225	5.72	2.875	73.03	1.791	45.49	1.680	42.66	214.89	955.87	198.21	34.69	**C1763-225-2875-S**	1.993	50.62	152.07	676.43	172.36	30.16
C1763-225-3000-M	1.763	44.78	0.225	5.72	3.000	76.20	1.860	47.24	1.742	44.24	214.89	955.87	188.49	32.99	**C1763-225-3000-S**	2.072	52.63	152.07	676.43	163.91	28.68
C1763-225-3250-M	1.763	44.78	0.225	5.72	3.250	82.55	1.998	50.75	1.866	47.40	214.89	955.87	171.66	30.04	**C1763-225-3250-S**	2.231	56.67	152.07	676.43	149.27	26.12
C1763-225-3500-M	1.763	44.78	0.225	5.72	3.500	88.90	2.136	54.27	1.991	50.56	214.89	955.87	157.59	27.58	**C1763-225-3500-S**	2.390	60.71	152.07	676.43	137.04	23.98
C1763-225-3750-M	1.763	44.78	0.225	5.72	3.750	95.25	2.275	57.78	2.115	53.72	214.89	955.87	145.66	25.49	**C1763-225-3750-S**	2.549	64.75	152.07	676.43	126.66	22.16
C1763-225-4000-M	1.763	44.78	0.225	5.72	4.000	101.60	2.413	61.29	2.239	56.88	214.89	955.87	135.40	23.69	**C1763-225-4000-S**	2.708	68.79	152.07	676.43	117.74	20.60
C1763-225-4250-M	1.763	44.78	0.225	5.72	4.250	107.95	2.551	64.80	2.364	60.04	214.89	955.87	126.49	22.14	**C1763-225-4250-S**	2.867	72.83	152.07	676.43	109.99	19.25

Part Numbers with an "*" are squared and not ground. **Part Numbers in bold** represent the newly expanded Associated Spring RAYMOND compression spring offering.

MUSIC WIRE															STAINLESS STEEL					
Catalog #	Outside Diameter (OD)		Wire Diameter (d)		Free Length (L) Approx		Load Length (L_1)		Solid Height (Sh) Approx		Load (P) at L_1		Spring Rate (R)		Catalog #	Load Length (L_1)		Load (P) at L_1		Spring Rate (R)	
	in	mm	in	mm	in	mm	in	mm	in	mm	lb	N	lb/in	N/mm		in	mm	lb	N	lb/in	N/mm
C1763-225-4500-M	**1.763**	**44.78**	**0.225**	**5.72**	**4.500**	**114.30**	**2.689**	**68.31**	**2.488**	**63.20**	**214.89**	**955.87**	**118.68**	**20.77**	**C1763-225-4500-S**	**3.027**	**76.87**	**152.07**	**676.43**	**103.20**	**18.06**
C1763-225-4750-M	**1.763**	**44.78**	**0.225**	**5.72**	**4.750**	**120.65**	**2.828**	**71.82**	**2.613**	**66.36**	**214.89**	**955.87**	**111.78**	**19.56**	**C1763-225-4750-S**	**3.186**	**80.91**	**152.07**	**676.43**	**97.20**	**17.01**
C1763-225-5000-M	**1.763**	**44.78**	**0.225**	**5.72**	**5.000**	**127.00**	**2.966**	**75.33**	**2.737**	**69.53**	**214.89**	**955.87**	**105.64**	**18.49**	**C1763-225-5000-S**	**3.345**	**84.95**	**152.07**	**676.43**	**91.86**	**16.08**
C1763-225-5250-M	**1.763**	**44.78**	**0.225**	**5.72**	**5.250**	**133.35**	**3.104**	**78.84**	**2.862**	**72.69**	**214.89**	**955.87**	**100.14**	**17.52**	**C1763-225-5250-S**	**3.504**	**88.99**	**152.07**	**676.43**	**87.08**	**15.24**
C1763-225-5500-M	**1.763**	**44.78**	**0.225**	**5.72**	**5.500**	**139.70**	**3.242**	**82.35**	**2.986**	**75.85**	**214.89**	**955.87**	**95.18**	**16.66**	**C1763-225-5500-S**	**3.663**	**93.03**	**152.07**	**676.43**	**82.77**	**14.48**
C1763-225-5750-M	**1.763**	**44.78**	**0.225**	**5.72**	**5.750**	**146.05**	**3.381**	**85.87**	**3.111**	**79.01**	**214.89**	**955.87**	**90.69**	**15.87**	**C1763-225-5750-S**	**3.822**	**97.07**	**152.07**	**676.43**	**78.86**	**13.80**
C1763-225-6000-M	**1.763**	**44.78**	**0.225**	**5.72**	**6.000**	**152.40**	**3.519**	**89.38**	**3.235**	**82.17**	**214.89**	**955.87**	**86.61**	**15.16**	**C1763-225-6000-S**	**3.981**	**101.11**	**152.07**	**676.43**	**75.31**	**13.18**
C1763-225-6250-M	**1.763**	**44.78**	**0.225**	**5.72**	**6.250**	**158.75**	**3.657**	**92.89**	**3.359**	**85.33**	**214.89**	**955.87**	**82.87**	**14.50**	**C1763-225-6250-S**	**4.140**	**105.15**	**152.07**	**676.43**	**72.06**	**12.61**
C1763-225-6500-M	**1.763**	**44.78**	**0.225**	**5.72**	**6.500**	**165.10**	**3.795**	**96.40**	**3.484**	**88.49**	**214.89**	**955.87**	**79.45**	**13.90**	**C1763-225-6500-S**	**4.299**	**109.19**	**152.07**	**676.43**	**69.09**	**12.09**
C1763-225-6750-M	**1.763**	**44.78**	**0.225**	**5.72**	**6.750**	**171.45**	**3.933**	**99.91**	**3.608**	**91.65**	**214.89**	**955.87**	**76.30**	**13.35**	**C1763-225-6750-S**	**4.458**	**113.23**	**152.07**	**676.43**	**66.34**	**11.61**
C1763-225-7000-M	**1.763**	**44.78**	**0.225**	**5.72**	**7.000**	**177.80**	**4.072**	**103.42**	**3.733**	**94.81**	**214.89**	**955.87**	**73.38**	**12.84**	**C1763-225-7000-S**	**4.617**	**117.27**	**152.07**	**676.43**	**63.81**	**11.17**
C1763-225-7500-M	**1.763**	**44.78**	**0.225**	**5.72**	**7.500**	**190.50**	**4.348**	**110.44**	**3.982**	**101.13**	**214.89**	**955.87**	**68.18**	**11.93**	**C1763-225-7500-S**	**4.935**	**125.35**	**152.07**	**676.43**	**59.29**	**10.38**
C1763-225-8000-M	**1.763**	**44.78**	**0.225**	**5.72**	**8.000**	**203.20**	**4.625**	**117.47**	**4.230**	**107.45**	**214.89**	**955.87**	**63.66**	**11.14**	**C1763-225-8000-S**	**5.253**	**133.43**	**152.07**	**676.43**	**55.36**	**9.69**
C1763-225-8500-M	**1.763**	**44.78**	**0.225**	**5.72**	**8.500**	**215.90**	**4.901**	**124.49**	**4.479**	**113.77**	**214.89**	**955.87**	**59.71**	**10.45**	**C1763-225-8500-S**	**5.571**	**141.51**	**152.07**	**676.43**	**51.92**	**9.09**
C1763-225-9000-M	**1.763**	**44.78**	**0.225**	**5.72**	**9.000**	**228.60**	**5.178**	**131.51**	**4.728**	**120.10**	**214.89**	**955.87**	**56.22**	**9.84**	**C1763-225-9000-S**	**5.889**	**149.59**	**152.07**	**676.43**	**48.89**	**8.55**
C1763-225-9500-M	**1.763**	**44.78**	**0.225**	**5.72**	**9.500**	**241.30**	**5.454**	**138.53**	**4.977**	**126.42**	**214.89**	**955.87**	**53.11**	**9.29**	**C1763-225-9500-S**	**6.207**	**157.67**	**152.07**	**676.43**	**46.18**	**8.08**
C1763-250-2375-M	**1.763**	**44.78**	**0.250**	**6.35**	**2.375**	**60.33**	**1.651**	**41.93**	**1.599**	**40.62**	**286.91**	**1276.24**	**396.19**	**69.33**	**C1763-250-2375-S**	**1.796**	**45.63**	**199.31**	**886.59**	**344.51**	**60.29**
C1763-250-2500-M	**1.763**	**44.78**	**0.250**	**6.35**	**2.500**	**63.50**	**1.728**	**43.88**	**1.671**	**42.44**	**286.91**	**1276.24**	**371.43**	**65.00**	**C1763-250-2500-S**	**1.883**	**47.83**	**199.31**	**886.59**	**322.98**	**56.52**
C1763-250-2625-M	**1.763**	**44.78**	**0.250**	**6.35**	**2.625**	**66.68**	**1.804**	**45.83**	**1.742**	**44.26**	**286.91**	**1276.24**	**349.58**	**61.18**	**C1763-250-2625-S**	**1.969**	**50.02**	**199.31**	**886.59**	**303.98**	**53.20**
C1763-250-2750-M	**1.763**	**44.78**	**0.250**	**6.35**	**2.750**	**69.85**	**1.881**	**47.78**	**1.814**	**46.08**	**286.91**	**1276.24**	**330.16**	**57.78**	**C1763-250-2750-S**	**2.056**	**52.22**	**199.31**	**886.59**	**287.09**	**50.24**
C1763-250-2875-M	**1.763**	**44.78**	**0.250**	**6.35**	**2.875**	**73.03**	**1.958**	**49.73**	**1.886**	**47.90**	**286.91**	**1276.24**	**312.78**	**54.74**	**C1763-250-2875-S**	**2.142**	**54.41**	**199.31**	**886.59**	**271.98**	**47.60**
C1763-250-3000-M	**1.763**	**44.78**	**0.250**	**6.35**	**3.000**	**76.20**	**2.034**	**51.67**	**1.957**	**49.71**	**286.91**	**1276.24**	**297.14**	**52.00**	**C1763-250-3000-S**	**2.229**	**56.61**	**199.31**	**886.59**	**258.38**	**45.22**
C1763-250-3250-M	**1.763**	**44.78**	**0.250**	**6.35**	**3.250**	**82.55**	**2.188**	**55.57**	**2.100**	**53.35**	**286.91**	**1276.24**	**270.13**	**47.27**	**C1763-250-3250-S**	**2.401**	**61.00**	**199.31**	**886.59**	**234.90**	**41.11**
C1763-250-3500-M	**1.763**	**44.78**	**0.250**	**6.35**	**3.500**	**88.90**	**2.341**	**59.47**	**2.244**	**56.99**	**286.91**	**1276.24**	**247.62**	**43.33**	**C1763-250-3500-S**	**2.574**	**65.39**	**199.31**	**886.59**	**215.32**	**37.68**
C1763-250-3750-M	**1.763**	**44.78**	**0.250**	**6.35**	**3.750**	**95.25**	**2.495**	**63.37**	**2.387**	**60.63**	**286.91**	**1276.24**	**228.57**	**40.00**	**C1763-250-3750-S**	**2.747**	**69.78**	**199.31**	**886.59**	**198.76**	**34.78**
C1763-250-4000-M	**1.763**	**44.78**	**0.250**	**6.35**	**4.000**	**101.60**	**2.648**	**67.26**	**2.530**	**64.27**	**286.91**	**1276.24**	**212.24**	**37.14**	**C1763-250-4000-S**	**2.920**	**74.17**	**199.31**	**886.59**	**184.56**	**32.30**
C1763-250-4250-M	**1.763**	**44.78**	**0.250**	**6.35**	**4.250**	**107.95**	**2.802**	**71.16**	**2.673**	**67.90**	**286.91**	**1276.24**	**198.09**	**34.67**	**C1763-250-4250-S**	**3.093**	**78.56**	**199.31**	**886.59**	**172.26**	**30.14**
C1763-250-4500-M	**1.763**	**44.78**	**0.250**	**6.35**	**4.500**	**114.30**	**2.955**	**75.06**	**2.817**	**71.54**	**286.91**	**1276.24**	**185.71**	**32.50**	**C1763-250-4500-S**	**3.266**	**82.95**	**199.31**	**886.59**	**161.49**	**28.26**
C1763-250-4750-M	**1.763**	**44.78**	**0.250**	**6.35**	**4.750**	**120.65**	**3.109**	**78.96**	**2.960**	**75.18**	**286.91**	**1276.24**	**174.79**	**30.59**	**C1763-250-4750-S**	**3.439**	**87.34**	**199.31**	**886.59**	**151.99**	**26.60**
C1763-250-5000-M	**1.763**	**44.78**	**0.250**	**6.35**	**5.000**	**127.00**	**3.262**	**82.85**	**3.103**	**78.82**	**286.91**	**1276.24**	**165.08**	**28.89**	**C1763-250-5000-S**	**3.612**	**91.73**	**199.31**	**886.59**	**143.55**	**25.12**
C1763-250-5250-M	**1.763**	**44.78**	**0.250**	**6.35**	**5.250**	**133.35**	**3.415**	**86.75**	**3.246**	**82.46**	**286.91**	**1276.24**	**156.39**	**27.37**	**C1763-250-5250-S**	**3.784**	**96.12**	**199.31**	**886.59**	**135.99**	**23.80**
C1763-250-5500-M	**1.763**	**44.78**	**0.250**	**6.35**	**5.500**	**139.70**	**3.569**	**90.65**	**3.389**	**86.09**	**286.91**	**1276.24**	**148.57**	**26.00**	**C1763-250-5500-S**	**3.957**	**100.51**	**199.31**	**886.59**	**129.19**	**22.61**
C1763-250-5750-M	**1.763**	**44.78**	**0.250**	**6.35**	**5.750**	**146.05**	**3.722**	**94.55**	**3.533**	**89.73**	**286.91**	**1276.24**	**141.50**	**24.76**	**C1763-250-5750-S**	**4.130**	**104.90**	**199.31**	**886.59**	**123.04**	**21.53**
C1763-250-6000-M	**1.763**	**44.78**	**0.250**	**6.35**	**6.000**	**152.40**	**3.876**	**98.44**	**3.676**	**93.37**	**286.91**	**1276.24**	**135.06**	**23.64**	**C1763-250-6000-S**	**4.303**	**109.29**	**199.31**	**886.59**	**117.45**	**20.55**
C1763-250-6250-M	**1.763**	**44.78**	**0.250**	**6.35**	**6.250**	**158.75**	**4.029**	**102.34**	**3.819**	**97.01**	**286.91**	**1276.24**	**129.19**	**22.61**	**C1763-250-6250-S**	**4.476**	**113.69**	**199.31**	**886.59**	**112.34**	**19.66**
C1763-250-6500-M	**1.763**	**44.78**	**0.250**	**6.35**	**6.500**	**165.10**	**4.183**	**106.24**	**3.962**	**100.64**	**286.91**	**1276.24**	**123.81**	**21.67**	**C1763-250-6500-S**	**4.649**	**118.08**	**199.31**	**886.59**	**107.66**	**18.84**
C1763-250-6750-M	**1.763**	**44.78**	**0.250**	**6.35**	**6.750**	**171.45**	**4.336**	**110.14**	**4.106**	**104.28**	**286.91**	**1276.24**	**118.86**	**20.80**	**C1763-250-6750-S**	**4.822**	**122.47**	**199.31**	**886.59**	**103.35**	**18.09**
C1763-250-7000-M	**1.763**	**44.78**	**0.250**	**6.35**	**7.000**	**177.80**	**4.490**	**114.03**	**4.249**	**107.92**	**286.91**	**1276.24**	**114.29**	**20.00**	**C1763-250-7000-S**	**4.994**	**126.86**	**199.31**	**886.59**	**99.38**	**17.39**
C1763-250-7500-M	**1.763**	**44.78**	**0.250**	**6.35**	**7.500**	**190.50**	**4.796**	**121.83**	**4.535**	**115.20**	**286.91**	**1276.24**	**106.12**	**18.57**	**C1763-250-7500-S**	**5.340**	**135.64**	**199.31**	**886.59**	**92.28**	**16.15**
C1763-250-8000-M	**1.763**	**44.78**	**0.250**	**6.35**	**8.000**	**203.20**	**5.103**	**129.62**	**4.822**	**122.47**	**286.91**	**1276.24**	**99.05**	**17.33**	**C1763-250-8000-S**	**5.686**	**144.42**	**199.31**	**886.59**	**86.13**	**15.07**
C1763-250-8500-M	**1.763**	**44.78**	**0.250**	**6.35**	**8.500**	**215.90**	**5.410**	**137.42**	**5.108**	**129.75**	**286.91**	**1276.24**	**92.86**	**16.25**	**C1763-250-8500-S**	**6.032**	**153.20**	**199.31**	**886.59**	**80.75**	**14.13**
C1763-250-9000-M	**1.763**	**44.78**	**0.250**	**6.35**	**9.000**	**228.60**	**5.717**	**145.21**	**5.395**	**137.02**	**286.91**	**1276.24**	**87.40**	**15.29**	**C1763-250-9000-S**	**6.377**	**161.98**	**199.31**	**886.59**	**76.00**	**13.30**
C1763-250-9500-M	**1.763**	**44.78**	**0.250**	**6.35**	**9.500**	**241.30**	**6.024**	**153.01**	**5.681**	**144.30**	**286.91**	**1276.24**	**82.54**	**14.44**	**C1763-250-9500-S**	**6.723**	**170.76**	**199.31**	**886.59**	**71.77**	**12.56**
D13880	1.772	45.00	0.197	5.00	2.520	64.00	1.165	29.60	1.083	27.50	220.46	980.67	161.94	28.34	D23880	1.165	29.60	183.72	817.23	134.91	23.61
D13890	1.772	45.00	0.197	5.00	3.760	95.50	1.618	41.10	1.476	37.50	220.46	980.67	103.09	18.04	D23890	1.618	41.10	183.72	817.23	85.89	15.03
D13900	1.772	45.00	0.197	5.00	5.512	140.00	2.299	58.40	2.067	52.50	220.46	980.67	66.69	11.67	D23900	2.299	58.40	183.72	817.23	55.54	9.72
D13910	1.772	45.00	0.197	5.00	8.071	205.00	3.205	81.40	2.854	72.50	220.46	980.67	45.37	7.94	D23910	3.205	81.40	183.72	817.23	37.77	6.61
D13920	1.772	45.00	0.197	5.00	11.811	300.00	4.567	116.00	4.035	102.50	220.46	980.67	30.63	5.36	D23920	4.567	116.00	183.72	817.23	25.49	4.46
C1821-148-3000-M	**1.821**	**46.25**	**0.148**	**3.76**	**3.000**	**76.20**	**1.209**	**30.72**	**0.938**	**23.83**	**65.32**	**290.57**	**36.48**	**6.38**	**C1821-148-3000-S**	**1.455**	**36.95**	**49.02**	**218.07**	**31.72**	**5.55**
C1821-148-3250-M	**1.821**	**46.25**	**0.148**	**3.76**	**3.250**	**82.55**	**1.294**	**32.87**	**0.996**	**25.30**	**65.32**	**290.57**	**33.40**	**5.84**	**C1821-148-3250-S**	**1.562**	**39.67**	**49.02**	**218.07**	**29.04**	**5.08**
C1821-148-3500-M	**1.821**	**46.25**	**0.148**	**3.76**	**3.500**	**88.90**	**1.378**	**35.01**	**1.054**	**26.78**	**65.32**	**290.57**	**30.79**	**5.39**	**C1821-148-3500-S**	**1.669**	**42.39**	**49.02**	**218.07**	**26.77**	**4.69**
C1821-148-3750-M	**1.821**	**46.25**	**0.148**	**3.76**	**3.750**	**95.25**	**1.463**	**37.16**	**1.112**	**28.25**	**65.32**	**290.57**	**28.56**	**5.00**	**C1821-148-3750-S**	**1.776**	**45.11**	**49.02**	**218.07**	**24.84**	**4.35**
C1821-148-4000-M	**1.821**	**46.25**	**0.148**	**3.76**	**4.000**	**101.60**	**1.547**	**39.30**	**1.170**	**29.72**	**65.32**	**290.57**	**26.63**	**4.66**	**C1821-148-4000-S**	**1.883**	**47.83**	**49.02**	**218.07**	**23.16**	**4.05**
C1821-148-4250-M	**1.821**	**46.25**	**0.148**	**3.76**	**4.250**	**107.95**	**1.632**	**41.45**	**1.228**	**31.20**	**65.32**	**290.57**	**24.95**	**4.37**	**C1821-148-4250-S**	**1.990**	**50.55**	**49.02**	**218.07**	**21.70**	**3.80**
C1821-148-4500-M	**1.821**	**46.25**	**0.148**	**3.76**	**4.500**	**114.30**	**1.716**	**43.59**	**1.286**	**32.67**	**65.32**	**290.57**	**23.47**	**4.11**	**C1821-148-4500-S**	**2.097**	**53.27**	**49.02**	**218.07**	**20.41**	**3.57**
C1821-148-4750-M	**1.821**	**46.25**	**0.148**	**3.76**	**4.750**	**120.65**	**1.801**	**45.74**	**1.344**	**34.14**	**65.32**	**290.57**	**22.15**	**3.88**	**C1821-148-4750-S**	**2.205**	**56.00**	**49.02**	**218.07**	**19.26**	**3.37**
C1821-148-5000-M	**1.821**	**46.25**	**0.148**	**3.76**	**5.000**	**127.00**	**1.885**	**47.88**	**1.402**	**35.62**	**65.32**	**290.57**	**20.97**	**3.67**	**C1821-148-5000-S**	**2.312**	**58.72**	**49.02**	**218.07**	**18.24**	**3.19**
C1821-148-5250-M	**1.821**	**46.25**	**0.148**	**3.76**	**5.250**	**133.35**	**1.970**	**50.03**	**1.460**	**37.09**	**65.32**	**290.57**	**19.91**	**3.48**	**C1821-148-5250-S**	**2.419**	**61.44**	**49.02**	**218.07**	**17.32**	**3.03**
C1821-148-5500-M	**1.821**	**46.25**	**0.148**	**3.76**	**5.500**	**139.70**	**2.054**	**52.17**	**1.518**	**38.56**	**65.32**	**290.57**	**18.96**	**3.32**	**C1821-148-5500-S**	**2.526**	**64.16**	**49.02**	**218.07**	**16.48**	**2.88**
C1821-148-5750-M	**1.821**	**46.25**	**0.148**	**3.76**	**5.750**	**146.05**	**2.139**	**54.32**	**1.576**	**40.04**	**65.32**	**290.57**	**18.09**	**3.17**	**C1821-148-5750-S**	**2.633**	**66.88**	**49.02**	**218.07**	**15.73**	**2.75**
C1821-148-6000-M	**1.821**	**46.25**	**0.148**	**3.76**	**6.000**	**152.40**	**2.223**	**56.46**	**1.634**	**41.51**	**65.32**	**290.57**	**17.30**	**3.03**	**C1821-148-6000-S**	**2.740**	**69.60**	**49.02**	**218.07**	**15.04**	**2.63**
C1821-148-6250-M	**1.821**	**46.25**	**0.148**	**3.76**	**6.250**	**158.75**	**2.307**	**58.61**	**1.692**	**42.98**	**65.32**	**290.57**	**16.57**	**2.90**	**C1821-148-6250-S**	**2.847**	**72.32**	**49.02**	**218.07**	**14.41**	**2.52**
C1821-148-6500-M	**1.821**	**46.25**	**0.148**	**3.76**	**6.500**	**165.10**	**2.392**	**60.75**	**1.750**	**44.46**	**65.32**	**290.57**	**15.90**	**2.78**	**C1821-148-6500-S**	**2.954**	**75.04**	**49.02**	**218.07**	**13.83**	**2.42**
C1821-148-6750-M	**1.821**	**46.25**	**0.148**	**3.76**	**6.750**	**171.45**	**2.476**	**62.90**	**1.808**	**45.93**	**65.32**	**290.57**	**15.29**	**2.67**	**C1821-148-6750-S**	**3.062**	**77.76**	**49.02**	**218.07**	**13.29**	**2.33**

FOR INFORMATION ON ALTERNATIVE FINISHES, SEE PAGE 311

Part Numbers with an "*" are squared and not ground. **Part Numbers in bold** represent the newly expanded Associated Spring RAYMOND compression spring offering.

MUSIC WIRE																STAINLESS STEEL						
Catalog #	Outside Diameter (OD)		Wire Diameter (d)		Free Length (L) Approx		Load Length (L_1)		Solid Height (Sh) Approx		Load (P) at L_1		Spring Rate (R)		Catalog #	Load Length (L_1)		Load (P) at L_1		Spring Rate (R)	
	in	mm	in	mm	in	mm	in	mm	in	mm	lb	N	lb/in	N/mm		in	mm	lb	N	lb/in	N/mm
C1821-148-7000-M	1.821	46.25	0.148	3.76	7.000	177.80	2.561	65.04	1.866	47.40	65.32	290.57	14.72	2.58	C1821-148-7000-S	3.169	80.48	49.02	218.07	12.80	2.24
C1821-148-7500-M	1.821	46.25	0.148	3.76	7.500	190.50	2.730	69.33	1.982	50.35	65.32	290.57	13.69	2.40	C1821-148-7500-S	3.383	85.93	49.02	218.07	11.91	2.08
C1821-148-8000-M	1.821	46.25	0.148	3.76	8.000	203.20	2.899	73.62	2.098	53.30	65.32	290.57	12.81	2.24	C1821-148-8000-S	3.597	91.37	49.02	218.07	11.14	1.95
C1821-148-8500-M	1.821	46.25	0.148	3.76	8.500	215.90	3.068	77.92	2.214	56.24	65.32	290.57	12.02	2.10	C1821-148-8500-S	3.811	96.81	49.02	218.07	10.46	1.83
C1821-148-9000-M	1.821	46.25	0.148	3.76	9.000	228.60	3.236	82.21	2.330	59.19	65.32	290.57	11.33	1.98	C1821-148-9000-S	4.026	102.25	49.02	218.07	9.86	1.72
C1821-148-9500-M	1.821	46.25	0.148	3.76	9.500	241.30	3.405	86.50	2.446	62.14	65.32	290.57	10.72	1.88	C1821-148-9500-S	4.240	107.69	49.02	218.07	9.32	1.63
C1821-162-2875-M	1.821	46.25	0.162	4.12	2.875	73.03	1.275	32.39	1.043	26.48	84.00	373.66	52.51	9.19	C1821-162-2875-S	1.509	38.33	62.37	277.43	45.66	7.99
C1821-162-3000-M	1.821	46.25	0.162	4.12	3.000	76.20	1.322	33.58	1.077	27.36	84.00	373.66	50.06	8.76	C1821-162-3000-S	1.567	39.81	62.37	277.43	43.53	7.62
C1821-162-3250-M	1.821	46.25	0.162	4.12	3.250	82.55	1.415	35.94	1.146	29.11	84.00	373.66	45.78	8.01	C1821-162-3250-S	1.683	42.76	62.37	277.43	39.81	6.97
C1821-162-3500-M	1.821	46.25	0.162	4.12	3.500	88.90	1.508	38.31	1.215	30.85	84.00	373.66	42.18	7.38	C1821-162-3500-S	1.799	45.71	62.37	277.43	36.68	6.42
C1821-162-3750-M	1.821	46.25	0.162	4.12	3.750	95.25	1.602	40.68	1.284	32.60	84.00	373.66	39.10	6.84	C1821-162-3750-S	1.916	48.66	62.37	277.43	34.00	5.95
C1821-162-4000-M	1.821	46.25	0.162	4.12	4.000	101.60	1.695	43.05	1.352	34.35	84.00	373.66	36.44	6.38	C1821-162-4000-S	2.032	51.61	62.37	277.43	31.69	5.55
C1821-162-4250-M	1.821	46.25	0.162	4.12	4.250	107.95	1.788	45.42	1.421	36.10	84.00	373.66	34.12	5.97	C1821-162-4250-S	2.148	54.56	62.37	277.43	29.67	5.19
C1821-162-4500-M	1.821	46.25	0.162	4.12	4.500	114.30	1.881	47.78	1.490	37.85	84.00	373.66	32.08	5.61	C1821-162-4500-S	2.264	57.51	62.37	277.43	27.89	4.88
C1821-162-4750-M	1.821	46.25	0.162	4.12	4.750	120.65	1.974	50.15	1.559	39.60	84.00	373.66	30.27	5.30	C1821-162-4750-S	2.380	60.46	62.37	277.43	26.32	4.61
C1821-162-5000-M	1.821	46.25	0.162	4.12	5.000	127.00	2.068	52.52	1.628	41.34	84.00	373.66	28.65	5.01	C1821-162-5000-S	2.496	63.41	62.37	277.43	24.91	4.36
C1821-162-5250-M	1.821	46.25	0.162	4.12	5.250	133.35	2.161	54.89	1.697	43.09	84.00	373.66	27.19	4.76	C1821-162-5250-S	2.612	66.36	62.37	277.43	23.65	4.14
C1821-162-5500-M	1.821	46.25	0.162	4.12	5.500	139.70	2.254	57.25	1.765	44.84	84.00	373.66	25.88	4.53	C1821-162-5500-S	2.729	69.31	62.37	277.43	22.50	3.94
C1821-162-5750-M	1.821	46.25	0.162	4.12	5.750	146.05	2.347	59.62	1.834	46.59	84.00	373.66	24.69	4.32	C1821-162-5750-S	2.845	72.26	62.37	277.43	21.47	3.76
C1821-162-6000-M	1.821	46.25	0.162	4.12	6.000	152.40	2.441	61.99	1.903	48.34	84.00	373.66	23.60	4.13	C1821-162-6000-S	2.961	75.21	62.37	277.43	20.52	3.59
C1821-162-6250-M	1.821	46.25	0.162	4.12	6.250	158.75	2.534	64.36	1.972	50.09	84.00	373.66	22.60	3.96	C1821-162-6250-S	3.077	78.16	62.37	277.43	19.66	3.44
C1821-162-6500-M	1.821	46.25	0.162	4.12	6.500	165.10	2.627	66.73	2.041	51.83	84.00	373.66	21.69	3.80	C1821-162-6500-S	3.193	81.11	62.37	277.43	18.86	3.30
C1821-162-6750-M	1.821	46.25	0.162	4.12	6.750	171.45	2.720	69.09	2.110	53.58	84.00	373.66	20.85	3.65	C1821-162-6750-S	3.309	84.06	62.37	277.43	18.13	3.17
C1821-162-7000-M	1.821	46.25	0.162	4.12	7.000	177.80	2.813	71.46	2.178	55.33	84.00	373.66	20.07	3.51	C1821-162-7000-S	3.425	87.01	62.37	277.43	17.45	3.05
C1821-162-7500-M	1.821	46.25	0.162	4.12	7.500	190.50	3.000	76.20	2.316	58.83	84.00	373.66	18.67	3.27	C1821-162-7500-S	3.658	92.90	62.37	277.43	16.23	2.84
C1821-162-8000-M*	1.821	46.25	0.162	4.12	8.000	203.20	3.288	83.51	2.579	65.51	84.00	373.66	17.83	3.12	C1821-162-8000-S*	3.977	101.01	62.37	277.43	15.50	2.71
C1821-162-8500-M*	1.821	46.25	0.162	4.12	8.500	215.90	3.474	88.25	2.717	69.01	84.00	373.66	16.72	2.93	C1821-162-8500-S*	4.209	106.91	62.37	277.43	14.54	2.54
C1821-162-9000-M*	1.821	46.25	0.162	4.12	9.000	228.60	3.661	92.99	2.855	72.51	84.00	373.66	15.73	2.75	C1821-162-9000-S*	4.441	112.81	62.37	277.43	13.68	2.39
C1821-162-9500-M*	1.821	46.25	0.162	4.12	9.500	241.30	3.847	97.72	2.992	76.00	84.00	373.66	14.86	2.60	C1821-162-9500-S*	4.674	118.71	62.37	277.43	12.92	2.26
C1821-177-2750-M	1.821	46.25	0.177	4.50	2.750	69.85	1.340	34.04	1.146	29.11	107.42	477.84	76.20	13.34	C1821-177-2750-S	1.560	39.63	78.84	350.71	66.26	11.60
C1821-177-2875-M	1.821	46.25	0.177	4.50	2.875	73.03	1.392	35.35	1.187	30.14	107.42	477.84	72.43	12.67	C1821-177-2875-S	1.623	41.23	78.84	350.71	62.98	11.02
C1821-177-3000-M	1.821	46.25	0.177	4.50	3.000	76.20	1.443	36.66	1.227	31.16	107.42	477.84	69.00	12.08	C1821-177-3000-S	1.686	42.82	78.84	350.71	60.00	10.50
C1821-177-3250-M	1.821	46.25	0.177	4.50	3.250	82.55	1.546	39.27	1.308	33.22	107.42	477.84	63.05	11.03	C1821-177-3250-S	1.812	46.02	78.84	350.71	54.82	9.59
C1821-177-3500-M	1.821	46.25	0.177	4.50	3.500	88.90	1.649	41.89	1.389	35.27	107.42	477.84	58.04	10.16	C1821-177-3500-S	1.938	49.22	78.84	350.71	50.47	8.83
C1821-177-3750-M	1.821	46.25	0.177	4.50	3.750	95.25	1.752	44.50	1.469	37.32	107.42	477.84	53.77	9.41	C1821-177-3750-S	2.064	52.41	78.84	350.71	46.75	8.18
C1821-177-4000-M	1.821	46.25	0.177	4.50	4.000	101.60	1.855	47.11	1.550	39.37	107.42	477.84	50.08	8.76	C1821-177-4000-S	2.189	55.61	78.84	350.71	43.55	7.62
C1821-177-4250-M	1.821	46.25	0.177	4.50	4.250	107.95	1.958	49.73	1.631	41.43	107.42	477.84	46.87	8.20	C1821-177-4250-S	2.315	58.81	78.84	350.71	40.75	7.13
C1821-177-4500-M	1.821	46.25	0.177	4.50	4.500	114.30	2.061	52.34	1.712	43.48	107.42	477.84	44.04	7.71	C1821-177-4500-S	2.441	62.00	78.84	350.71	38.30	6.70
C1821-177-4750-M	1.821	46.25	0.177	4.50	4.750	120.65	2.164	54.96	1.793	45.53	107.42	477.84	41.53	7.27	C1821-177-4750-S	2.567	65.20	78.84	350.71	36.12	6.32
C1821-177-5000-M	1.821	46.25	0.177	4.50	5.000	127.00	2.267	57.57	1.873	47.58	107.42	477.84	39.30	6.88	C1821-177-5000-S	2.693	68.40	78.84	350.71	34.17	5.98
C1821-177-5250-M	1.821	46.25	0.177	4.50	5.250	133.35	2.369	60.18	1.954	49.64	107.42	477.84	37.29	6.53	C1821-177-5250-S	2.819	71.59	78.84	350.71	32.43	5.67
C1821-177-5500-M	1.821	46.25	0.177	4.50	5.500	139.70	2.472	62.80	2.035	51.69	107.42	477.84	35.48	6.21	C1821-177-5500-S	2.945	74.79	78.84	350.71	30.85	5.40
C1821-177-5750-M	1.821	46.25	0.177	4.50	5.750	146.05	2.575	65.41	2.116	53.74	107.42	477.84	33.84	5.92	C1821-177-5750-S	3.070	77.99	78.84	350.71	29.42	5.15
C1821-177-6000-M	1.821	46.25	0.177	4.50	6.000	152.40	2.678	68.03	2.197	55.79	107.42	477.84	32.34	5.66	C1821-177-6000-S	3.196	81.18	78.84	350.71	28.12	4.92
C1821-177-6250-M	1.821	46.25	0.177	4.50	6.250	158.75	2.781	70.64	2.277	57.85	107.42	477.84	30.97	5.42	C1821-177-6250-S	3.322	84.38	78.84	350.71	26.93	4.71
C1821-177-6500-M	1.821	46.25	0.177	4.50	6.500	165.10	2.884	73.25	2.358	59.90	107.42	477.84	29.71	5.20	C1821-177-6500-S	3.448	87.58	78.84	350.71	25.83	4.52
C1821-177-6750-M*	1.821	46.25	0.177	4.50	6.750	171.45	3.091	78.51	2.568	65.22	107.42	477.84	29.36	5.14	C1821-177-6750-S*	3.662	93.01	78.84	350.71	25.53	4.47
C1821-177-7000-M*	1.821	46.25	0.177	4.50	7.000	177.80	3.194	81.13	2.648	67.27	107.42	477.84	28.23	4.94	C1821-177-7000-S*	3.788	96.20	78.84	350.71	24.54	4.30
C1821-177-7500-M*	1.821	46.25	0.177	4.50	7.500	190.50	3.400	86.35	2.810	71.38	107.42	477.84	26.20	4.59	C1821-177-7500-S*	4.039	102.60	78.84	350.71	22.78	3.99
C1821-177-8000-M*	1.821	46.25	0.177	4.50	8.000	203.20	3.606	91.58	2.972	75.48	107.42	477.84	24.45	4.28	C1821-177-8000-S*	4.291	108.99	78.84	350.71	21.26	3.72
C1821-177-8500-M*	1.821	46.25	0.177	4.50	8.500	215.90	3.811	96.81	3.133	79.58	107.42	477.84	22.91	4.01	C1821-177-8500-S*	4.543	115.38	78.84	350.71	19.92	3.49
C1821-177-9000-M*	1.821	46.25	0.177	4.50	9.000	228.60	4.017	102.04	3.295	83.69	107.42	477.84	21.56	3.77	C1821-177-9000-S*	4.794	121.78	78.84	350.71	18.75	3.28
C1821-177-9500-M*	1.821	46.25	0.177	4.50	9.500	241.30	4.223	107.27	3.456	87.79	107.42	477.84	20.36	3.56	C1821-177-9500-S*	5.046	128.17	78.84	350.71	17.70	3.10
C1821-192-2625-M	1.821	46.25	0.192	4.88	2.625	66.68	1.394	35.42	1.236	31.40	134.59	598.69	109.38	19.14	C1821-192-2625-S	1.598	40.60	97.65	434.38	95.11	16.64
C1821-192-2750-M	1.821	46.25	0.192	4.88	2.750	69.85	1.451	36.85	1.283	32.58	134.59	598.69	103.60	18.13	C1821-192-2750-S	1.666	42.32	97.65	434.38	90.08	15.76
C1821-192-2875-M	1.821	46.25	0.192	4.88	2.875	73.03	1.507	38.28	1.329	33.76	134.59	598.69	98.40	17.22	C1821-192-2875-S	1.734	44.04	97.65	434.38	85.56	14.97
C1821-192-3000-M	1.821	46.25	0.192	4.88	3.000	76.20	1.564	39.71	1.376	34.94	134.59	598.69	93.70	16.40	C1821-192-3000-S	1.801	45.76	97.65	434.38	81.48	14.26
C1821-192-3250-M	1.821	46.25	0.192	4.88	3.250	82.55	1.676	42.58	1.468	37.30	134.59	598.69	85.52	14.97	C1821-192-3250-S	1.937	49.20	97.65	434.38	74.37	13.01
C1821-192-3500-M	1.821	46.25	0.192	4.88	3.500	88.90	1.789	45.44	1.561	39.66	134.59	598.69	78.66	13.77	C1821-192-3500-S	2.072	52.64	97.65	434.38	68.40	11.97
C1821-192-3750-M	1.821	46.25	0.192	4.88	3.750	95.25	1.902	48.30	1.654	42.02	134.59	598.69	72.82	12.74	C1821-192-3750-S	2.208	56.08	97.65	434.38	63.32	11.08
C1821-192-4000-M	1.821	46.25	0.192	4.88	4.000	101.60	2.014	51.17	1.747	44.38	134.59	598.69	67.79	11.86	C1821-192-4000-S	2.343	59.52	97.65	434.38	58.94	10.32
C1821-192-4250-M	1.821	46.25	0.192	4.88	4.250	107.95	2.127	54.03	1.840	46.74	134.59	598.69	63.40	11.10	C1821-192-4250-S	2.479	62.96	97.65	434.38	55.13	9.65
C1821-192-4500-M	1.821	46.25	0.192	4.88	4.500	114.30	2.240	56.89	1.933	49.10	134.59	598.69	59.55	10.42	C1821-192-4500-S	2.614	66.40	97.65	434.38	51.78	9.06
C1821-192-4750-M	1.821	46.25	0.192	4.88	4.750	120.65	2.353	59.76	2.026	51.46	134.59	598.69	56.14	9.82	C1821-192-4750-S	2.750	69.84	97.65	434.38	48.82	8.54

Part Numbers with an "*" are squared and not ground. **Part Numbers in bold** represent the newly expanded Associated Spring RAYMOND compression spring offering.

MUSIC WIRE															STAINLESS STEEL						
Catalog #	Outside Diameter (OD)		Wire Diameter (d)		Free Length (L) Approx		Load Length (L_1)		Solid Height (Sh) Approx		Load (P) at L_1		Spring Rate (R)		Catalog #	Load Length (L_1)		Load (P) at L_1		Spring Rate (R)	
	in	mm	in	mm	in	mm	in	mm	in	mm	lb	N	lb/in	N/mm		in	mm	lb	N	lb/in	N/mm
C1821-192-5000-M	1.821	46.25	0.192	4.88	5.000	127.00	2.465	62.62	2.119	53.82	134.59	598.69	53.10	9.29	**C1821-192-5000-S**	2.885	73.28	97.65	434.38	46.17	8.08
C1821-192-5250-M	1.821	46.25	0.192	4.88	5.250	133.35	2.578	65.48	2.212	56.18	134.59	598.69	50.37	8.82	**C1821-192-5250-S**	3.021	76.72	97.65	434.38	43.80	7.67
C1821-192-5500-M	1.821	46.25	0.192	4.88	5.500	139.70	2.691	68.35	2.305	58.54	134.59	598.69	47.91	8.38	**C1821-192-5500-S**	3.156	80.16	97.65	434.38	41.66	7.29
C1821-192-5750-M	1.821	46.25	0.192	4.88	5.750	146.05	2.803	71.21	2.398	60.90	134.59	598.69	45.68	7.99	**C1821-192-5750-S**	3.291	83.60	97.65	434.38	39.72	6.95
C1821-192-6000-M	1.821	46.25	0.192	4.88	6.000	152.40	2.916	74.07	2.491	63.26	134.59	598.69	43.65	7.64	**C1821-192-6000-S**	3.427	87.04	97.65	434.38	37.95	6.64
C1821-192-6250-M	1.821	46.25	0.192	4.88	6.250	158.75	3.029	76.93	2.584	65.62	134.59	598.69	41.79	7.31	**C1821-192-6250-S**	3.562	90.48	97.65	434.38	36.33	6.36
C1821-192-6500-M	1.821	46.25	0.192	4.88	6.500	165.10	3.142	79.80	2.676	67.98	134.59	598.69	40.08	7.01	**C1821-192-6500-S**	3.698	93.93	97.65	434.38	34.85	6.10
C1821-192-6750-M	1.821	46.25	0.192	4.88	6.750	171.45	3.254	82.66	2.769	70.34	134.59	598.69	38.50	6.74	**C1821-192-6750-S**	3.833	97.37	97.65	434.38	33.48	5.86
C1821-192-7000-M*	1.821	46.25	0.192	4.88	7.000	177.80	3.473	88.20	2.993	76.01	134.59	598.69	38.16	6.68	**C1821-192-7000-S***	4.057	103.04	97.65	434.38	33.18	5.81
C1821-192-7500-M*	1.821	46.25	0.192	4.88	7.500	190.50	3.698	93.93	3.178	80.73	134.59	598.69	35.40	6.20	**C1821-192-7500-S***	4.328	109.92	97.65	434.38	30.78	5.39
C1821-192-8000-M*	1.821	46.25	0.192	4.88	8.000	203.20	3.923	99.65	3.364	85.45	134.59	598.69	33.02	5.78	**C1821-192-8000-S***	4.599	116.80	97.65	434.38	28.71	5.02
C1821-192-8500-M*	1.821	46.25	0.192	4.88	8.500	215.90	4.149	105.38	3.550	90.17	134.59	598.69	30.93	5.41	**C1821-192-8500-S***	4.869	123.68	97.65	434.38	26.90	4.71
C1821-192-9000-M*	1.821	46.25	0.192	4.88	9.000	228.60	4.374	111.11	3.736	94.89	134.59	598.69	29.10	5.09	**C1821-192-9000-S***	5.140	130.57	97.65	434.38	25.30	4.43
C1821-192-9500-M*	1.821	46.25	0.192	4.88	9.500	241.30	4.600	116.83	3.922	99.61	134.59	598.69	27.47	4.81	**C1821-192-9500-S***	5.411	137.45	97.65	434.38	23.88	4.18
C1821-207-2500-M	1.821	46.25	0.207	5.26	2.500	63.50	1.436	36.48	1.311	33.29	165.72	737.14	155.75	27.26	**C1821-207-2500-S**	1.622	41.21	118.87	528.76	135.44	23.70
C1821-207-2625-M	1.821	46.25	0.207	5.26	2.625	66.68	1.497	38.03	1.363	34.62	165.72	737.14	146.95	25.72	**C1821-207-2625-S**	1.695	43.05	118.87	528.76	127.78	22.36
C1821-207-2750-M	1.821	46.25	0.207	5.26	2.750	69.85	1.559	39.59	1.416	35.96	165.72	737.14	139.09	24.34	**C1821-207-2750-S**	1.767	44.89	118.87	528.76	120.94	21.17
C1821-207-2875-M	1.821	46.25	0.207	5.26	2.875	73.03	1.620	41.14	1.468	37.29	165.72	737.14	132.02	23.10	**C1821-207-2875-S**	1.840	46.72	118.87	528.76	114.80	20.09
C1821-207-3000-M	1.821	46.25	0.207	5.26	3.000	76.20	1.681	42.70	1.521	38.62	165.72	737.14	125.64	21.99	**C1821-207-3000-S**	1.912	48.56	118.87	528.76	109.25	19.12
C1821-207-3250-M	1.821	46.25	0.207	5.26	3.250	82.55	1.804	45.81	1.626	41.29	165.72	737.14	114.56	20.05	**C1821-207-3250-S**	2.057	52.24	118.87	528.76	99.62	17.43
C1821-207-3500-M	1.821	46.25	0.207	5.26	3.500	88.90	1.926	48.92	1.731	43.96	165.72	737.14	105.28	18.42	**C1821-207-3500-S**	2.202	55.92	118.87	528.76	91.55	16.02
C1821-207-3750-M	1.821	46.25	0.207	5.26	3.750	95.25	2.048	52.03	1.836	46.62	165.72	737.14	97.39	17.04	**C1821-207-3750-S**	2.346	59.60	118.87	528.76	84.69	14.82
C1821-207-4000-M	1.821	46.25	0.207	5.26	4.000	101.60	2.171	55.14	1.941	49.29	165.72	737.14	90.60	15.86	**C1821-207-4000-S**	2.491	63.28	118.87	528.76	78.79	13.79
C1821-207-4250-M	1.821	46.25	0.207	5.26	4.250	107.95	2.293	58.25	2.046	51.96	165.72	737.14	84.70	14.82	**C1821-207-4250-S**	2.636	66.95	118.87	528.76	73.65	12.89
C1821-207-4500-M	1.821	46.25	0.207	5.26	4.500	114.30	2.416	61.36	2.151	54.62	165.72	737.14	79.52	13.92	**C1821-207-4500-S**	2.781	70.63	118.87	528.76	69.14	12.10
C1821-207-4750-M	1.821	46.25	0.207	5.26	4.750	120.65	2.538	64.48	2.256	57.29	165.72	737.14	74.93	13.11	**C1821-207-4750-S**	2.926	74.31	118.87	528.76	65.16	11.40
C1821-207-5000-M	1.821	46.25	0.207	5.26	5.000	127.00	2.661	67.59	2.361	59.96	165.72	737.14	70.85	12.40	**C1821-207-5000-S**	3.070	77.99	118.87	528.76	61.61	10.78
C1821-207-5250-M	1.821	46.25	0.207	5.26	5.250	133.35	2.783	70.70	2.466	62.62	165.72	737.14	67.18	11.76	**C1821-207-5250-S**	3.215	81.67	118.87	528.76	58.42	10.22
C1821-207-5500-M	1.821	46.25	0.207	5.26	5.500	139.70	2.906	73.81	2.571	65.29	165.72	737.14	63.88	11.18	**C1821-207-5500-S**	3.360	85.35	118.87	528.76	55.55	9.72
C1821-207-5750-M	1.821	46.25	0.207	5.26	5.750	146.05	3.028	76.92	2.675	67.96	165.72	737.14	60.89	10.66	**C1821-207-5750-S**	3.505	89.02	118.87	528.76	52.95	9.27
C1821-207-6000-M	1.821	46.25	0.207	5.26	6.000	152.40	3.151	80.03	2.780	70.62	165.72	737.14	58.16	10.18	**C1821-207-6000-S**	3.650	92.70	118.87	528.76	50.58	8.85
C1821-207-6250-M	1.821	46.25	0.207	5.26	6.250	158.75	3.273	83.14	2.885	73.29	165.72	737.14	55.67	9.74	**C1821-207-6250-S**	3.795	96.38	118.87	528.76	48.41	8.47
C1821-207-6500-M	1.821	46.25	0.207	5.26	6.500	165.10	3.396	86.25	2.990	75.96	165.72	737.14	53.39	9.34	**C1821-207-6500-S**	3.939	100.06	118.87	528.76	46.42	8.12
C1821-207-6750-M	1.821	46.25	0.207	5.26	6.750	171.45	3.518	89.37	3.095	78.62	165.72	737.14	51.28	8.97	**C1821-207-6750-S**	4.084	103.74	118.87	528.76	44.59	7.80
C1821-207-7000-M	1.821	46.25	0.207	5.26	7.000	177.80	3.641	92.48	3.200	81.29	165.72	737.14	49.33	8.63	**C1821-207-7000-S**	4.229	107.42	118.87	528.76	42.90	7.51
C1821-207-7500-M	1.821	46.25	0.207	5.26	7.500	190.50	3.886	98.70	3.410	86.62	165.72	737.14	45.85	8.02	**C1821-207-7500-S**	4.519	114.77	118.87	528.76	39.87	6.98
C1821-207-8000-M	1.821	46.25	0.207	5.26	8.000	203.20	4.131	104.92	3.620	91.96	165.72	737.14	42.83	7.50	**C1821-207-8000-S**	4.808	122.13	118.87	528.76	37.24	6.52
C1821-207-8500-M	1.821	46.25	0.207	5.26	8.500	215.90	4.376	111.14	3.830	97.29	165.72	737.14	40.18	7.03	**C1821-207-8500-S**	5.098	129.49	118.87	528.76	34.94	6.11
C1821-207-9000-M*	1.821	46.25	0.207	5.26	9.000	228.60	4.726	120.05	4.171	105.94	165.72	737.14	38.78	6.79	**C1821-207-9000-S***	5.475	139.05	118.87	528.76	33.72	5.90
C1821-207-9500-M*	1.821	46.25	0.207	5.26	9.500	241.30	4.971	126.27	4.381	111.27	165.72	737.14	36.59	6.40	**C1821-207-9500-S***	5.764	146.41	118.87	528.76	31.82	5.57
C1821-225-2500-M	1.821	46.25	0.225	5.72	2.500	63.50	1.548	39.33	1.449	36.81	208.57	927.76	219.16	38.35	**C1821-225-2500-S**	1.726	43.83	147.60	656.54	190.57	33.35
C1821-225-2625-M	1.821	46.25	0.225	5.72	2.625	66.68	1.615	41.03	1.509	38.33	208.57	927.76	206.56	36.15	**C1821-225-2625-S**	1.803	45.80	147.60	656.54	179.62	31.43
C1821-225-2750-M	1.821	46.25	0.225	5.72	2.750	69.85	1.682	42.73	1.569	39.84	208.57	927.76	195.34	34.18	**C1821-225-2750-S**	1.881	47.78	147.60	656.54	169.86	29.73
C1821-225-2875-M	1.821	46.25	0.225	5.72	2.875	73.03	1.749	44.43	1.628	41.35	208.57	927.76	185.27	32.42	**C1821-225-2875-S**	1.959	49.75	147.60	656.54	161.10	28.19
C1821-225-3000-M	1.821	46.25	0.225	5.72	3.000	76.20	1.816	46.13	1.688	42.87	208.57	927.76	176.19	30.83	**C1821-225-3000-S**	2.037	51.73	147.60	656.54	153.21	26.81
C1821-225-3250-M	1.821	46.25	0.225	5.72	3.250	82.55	1.950	49.53	1.807	45.89	208.57	927.76	160.46	28.08	**C1821-225-3250-S**	2.192	55.68	147.60	656.54	139.53	24.42
C1821-225-3500-M	1.821	46.25	0.225	5.72	3.500	88.90	2.084	52.94	1.926	48.92	208.57	927.76	147.30	25.78	**C1821-225-3500-S**	2.348	59.63	147.60	656.54	128.09	22.42
C1821-225-3750-M	1.821	46.25	0.225	5.72	3.750	95.25	2.218	56.34	2.045	51.94	208.57	927.76	136.15	23.83	**C1821-225-3750-S**	2.503	63.58	147.60	656.54	118.39	20.72
C1821-225-4000-M	1.821	46.25	0.225	5.72	4.000	101.60	2.352	59.74	2.164	54.97	208.57	927.76	126.56	22.15	**C1821-225-4000-S**	2.659	67.53	147.60	656.54	110.05	19.26
C1821-225-4250-M	1.821	46.25	0.225	5.72	4.250	107.95	2.486	63.14	2.283	58.00	208.57	927.76	118.23	20.69	**C1821-225-4250-S**	2.814	71.49	147.60	656.54	102.81	17.99
C1821-225-4500-M	1.821	46.25	0.225	5.72	4.500	114.30	2.620	66.54	2.402	61.02	208.57	927.76	110.93	19.41	**C1821-225-4500-S**	2.970	75.44	147.60	656.54	96.46	16.88
C1821-225-4750-M	1.821	46.25	0.225	5.72	4.750	120.65	2.754	69.95	2.522	64.05	208.57	927.76	104.48	18.28	**C1821-225-4750-S**	3.125	79.39	147.60	656.54	90.86	15.90
C1821-225-5000-M	1.821	46.25	0.225	5.72	5.000	127.00	2.888	73.35	2.641	67.07	208.57	927.76	98.74	17.28	**C1821-225-5000-S**	3.281	83.34	147.60	656.54	85.86	15.03
C1821-225-5250-M	1.821	46.25	0.225	5.72	5.250	133.35	3.022	76.75	2.760	70.10	208.57	927.76	93.60	16.38	**C1821-225-5250-S**	3.437	87.29	147.60	656.54	81.39	14.24
C1821-225-5500-M	1.821	46.25	0.225	5.72	5.500	139.70	3.156	80.15	2.879	73.13	208.57	927.76	88.97	15.57	**C1821-225-5500-S**	3.592	91.24	147.60	656.54	77.36	13.54
C1821-225-5750-M	1.821	46.25	0.225	5.72	5.750	146.05	3.290	83.56	2.998	76.15	208.57	927.76	84.77	14.83	**C1821-225-5750-S**	3.748	95.19	147.60	656.54	73.71	12.90
C1821-225-6000-M	1.821	46.25	0.225	5.72	6.000	152.40	3.424	86.96	3.117	79.18	208.57	927.76	80.95	14.17	**C1821-225-6000-S**	3.903	99.14	147.60	656.54	70.39	12.32
C1821-225-6250-M	1.821	46.25	0.225	5.72	6.250	158.75	3.557	90.36	3.236	82.20	208.57	927.76	77.46	13.56	**C1821-225-6250-S**	4.059	103.09	147.60	656.54	67.36	11.79
C1821-225-6500-M	1.821	46.25	0.225	5.72	6.500	165.10	3.691	93.76	3.356	85.23	208.57	927.76	74.26	13.00	**C1821-225-6500-S**	4.214	107.04	147.60	656.54	64.57	11.30
C1821-225-6750-M	1.821	46.25	0.225	5.72	6.750	171.45	3.825	97.16	3.475	88.26	208.57	927.76	71.31	12.48	**C1821-225-6750-S**	4.370	111.00	147.60	656.54	62.01	10.85
C1821-225-7000-M	1.821	46.25	0.225	5.72	7.000	177.80	3.959	100.57	3.594	91.28	208.57	927.76	68.59	12.00	**C1821-225-7000-S**	4.525	114.95	147.60	656.54	59.65	10.44
C1821-225-7500-M	1.821	46.25	0.225	5.72	7.500	190.50	4.227	107.37	3.832	97.34	208.57	927.76	63.73	11.15	**C1821-225-7500-S**	4.837	122.85	147.60	656.54	55.42	9.70
C1821-225-8000-M	1.821	46.25	0.225	5.72	8.000	203.20	4.495	114.17	4.070	103.39	208.57	927.76	59.51	10.41	**C1821-225-8000-S**	5.148	130.75	147.60	656.54	51.75	9.06
C1821-225-8500-M	1.821	46.25	0.225	5.72	8.500	215.90	4.763	120.98	4.309	109.44	208.57	927.76	55.81	9.77	**C1821-225-8500-S**	5.459	138.65	147.60	656.54	48.53	8.49

FOR INFORMATION ON ALTERNATIVE FINISHES, SEE PAGE 311

Part Numbers with an "*" are squared and not ground. **Part Numbers in bold** represent the newly expanded Associated Spring RAYMOND compression spring offering.

MUSIC WIRE															STAINLESS STEEL						
Catalog #	Outside Diameter (OD)		Wire Diameter (d)		Free Length (L) Approx		Load Length (L_1)		Solid Height (Sh) Approx		Load (P) at L_1		Spring Rate (R)		Catalog #	Load Length (L_1)		Load (P) at L_1		Spring Rate (R)	
	in	mm	in	mm	in	mm	in	mm	in	mm	lb	N	lb/in	N/mm		in	mm	lb	N	lb/in	N/mm
C1821-225-9000-M	1.821	46.25	0.225	5.72	9.000	228.60	5.031	127.78	4.547	115.49	208.57	927.76	52.55	9.20	**C1821-225-9000-S**	5.770	146.55	147.60	656.54	45.69	8.00
C1821-225-9500-M	1.821	46.25	0.225	5.72	9.500	241.30	5.299	134.59	4.785	121.54	208.57	927.76	49.64	8.69	**C1821-225-9500-S**	6.081	154.46	147.60	656.54	43.17	7.55
C1821-250-2500-M	1.821	46.25	0.250	6.35	2.500	63.50	1.692	42.98	1.627	41.33	278.61	1239.30	344.92	60.36	**C1821-250-2500-S**	1.855	47.11	193.55	860.93	299.93	52.49
C1821-250-2625-M	1.821	46.25	0.250	6.35	2.625	66.68	1.767	44.88	1.696	43.08	278.61	1239.30	324.63	56.81	**C1821-250-2625-S**	1.939	49.26	193.55	860.93	282.28	49.40
C1821-250-2750-M	1.821	46.25	0.250	6.35	2.750	69.85	1.841	46.77	1.765	44.83	278.61	1239.30	306.59	53.65	**C1821-250-2750-S**	2.024	51.41	193.55	860.93	266.60	46.66
C1821-250-2875-M	1.821	46.25	0.250	6.35	2.875	73.03	1.916	48.66	1.834	46.58	278.61	1239.30	290.46	50.83	**C1821-250-2875-S**	2.109	53.56	193.55	860.93	252.57	44.20
C1821-250-3000-M	1.821	46.25	0.250	6.35	3.000	76.20	1.990	50.55	1.903	48.33	278.61	1239.30	275.93	48.29	**C1821-250-3000-S**	2.193	55.71	193.55	860.93	239.94	41.99
C1821-250-3250-M	1.821	46.25	0.250	6.35	3.250	82.55	2.139	54.34	2.041	51.83	278.61	1239.30	250.85	43.90	**C1821-250-3250-S**	2.363	60.01	193.55	860.93	218.13	38.17
C1821-250-3500-M	1.821	46.25	0.250	6.35	3.500	88.90	2.288	58.12	2.178	55.33	278.61	1239.30	229.94	40.24	**C1821-250-3500-S**	2.532	64.31	193.55	860.93	199.95	34.99
C1821-250-3750-M	1.821	46.25	0.250	6.35	3.750	95.25	2.437	61.91	2.316	58.83	278.61	1239.30	212.26	37.14	**C1821-250-3750-S**	2.701	68.61	193.55	860.93	184.57	32.30
C1821-250-4000-M	1.821	46.25	0.250	6.35	4.000	101.60	2.586	65.70	2.454	62.33	278.61	1239.30	197.09	34.49	**C1821-250-4000-S**	2.871	72.92	193.55	860.93	171.39	29.99
C1821-250-4250-M	1.821	46.25	0.250	6.35	4.250	107.95	2.735	69.48	2.592	65.83	278.61	1239.30	183.96	32.19	**C1821-250-4250-S**	3.040	77.22	193.55	860.93	159.96	27.99
C1821-250-4500-M	1.821	46.25	0.250	6.35	4.500	114.30	2.884	73.27	2.729	69.33	278.61	1239.30	172.46	30.18	**C1821-250-4500-S**	3.209	81.52	193.55	860.93	149.96	26.24
C1821-250-4750-M	1.821	46.25	0.250	6.35	4.750	120.65	3.034	77.05	2.867	72.83	278.61	1239.30	162.31	28.40	**C1821-250-4750-S**	3.379	85.82	193.55	860.93	141.14	24.70
C1821-250-5000-M	1.821	46.25	0.250	6.35	5.000	127.00	3.183	80.84	3.005	76.33	278.61	1239.30	153.30	26.83	**C1821-250-5000-S**	3.548	90.12	193.55	860.93	133.30	23.33
C1821-250-5250-M	1.821	46.25	0.250	6.35	5.250	133.35	3.332	84.62	3.143	79.82	278.61	1239.30	145.23	25.41	**C1821-250-5250-S**	3.717	94.42	193.55	860.93	126.29	22.10
C1821-250-5500-M	1.821	46.25	0.250	6.35	5.500	139.70	3.481	88.41	3.280	83.32	278.61	1239.30	137.97	24.14	**C1821-250-5500-S**	3.887	98.72	193.55	860.93	119.97	20.99
C1821-250-5750-M	1.821	46.25	0.250	6.35	5.750	146.05	3.630	92.19	3.418	86.82	278.61	1239.30	131.40	22.99	**C1821-250-5750-S**	4.056	103.02	193.55	860.93	114.26	20.00
C1821-250-6000-M	1.821	46.25	0.250	6.35	6.000	152.40	3.779	95.98	3.556	90.32	278.61	1239.30	125.42	21.95	**C1821-250-6000-S**	4.225	107.33	193.55	860.93	109.06	19.09
C1821-250-6250-M	1.821	46.25	0.250	6.35	6.250	158.75	3.928	99.76	3.694	93.82	278.61	1239.30	119.97	20.99	**C1821-250-6250-S**	4.395	111.63	193.55	860.93	104.32	18.26
C1821-250-6500-M	1.821	46.25	0.250	6.35	6.500	165.10	4.077	103.55	3.832	97.32	278.61	1239.30	114.97	20.12	**C1821-250-6500-S**	4.564	115.93	193.55	860.93	99.98	17.50
C1821-250-6750-M	1.821	46.25	0.250	6.35	6.750	171.45	4.226	107.33	3.969	100.82	278.61	1239.30	110.37	19.32	**C1821-250-6750-S**	4.733	120.23	193.55	860.93	95.98	16.80
C1821-250-7000-M	1.821	46.25	0.250	6.35	7.000	177.80	4.375	111.12	4.107	104.32	278.61	1239.30	106.13	18.57	**C1821-250-7000-S**	4.903	124.53	193.55	860.93	92.29	16.15
C1821-250-7500-M	1.821	46.25	0.250	6.35	7.500	190.50	4.673	118.69	4.383	111.32	278.61	1239.30	98.55	17.25	**C1821-250-7500-S**	5.241	133.13	193.55	860.93	85.69	15.00
C1821-250-8000-M	1.821	46.25	0.250	6.35	8.000	203.20	4.971	126.26	4.658	118.32	278.61	1239.30	91.98	16.10	**C1821-250-8000-S**	5.580	141.73	193.55	860.93	79.98	14.00
C1821-250-8500-M	1.821	46.25	0.250	6.35	8.500	215.90	5.269	133.83	4.934	125.32	278.61	1239.30	86.23	15.09	**C1821-250-8500-S**	5.919	150.34	193.55	860.93	74.98	13.12
C1821-250-9000-M	1.821	46.25	0.250	6.35	9.000	228.60	5.567	141.40	5.209	132.32	278.61	1239.30	81.16	14.20	**C1821-250-9000-S**	6.257	158.94	193.55	860.93	70.57	12.35
C1821-250-9500-M	1.821	46.25	0.250	6.35	9.500	241.30	5.865	148.97	5.485	139.32	278.61	1239.30	76.65	13.41	**C1821-250-9500-S**	6.596	167.54	193.55	860.93	66.65	11.66
C1880-148-3250-M	1.880	47.75	0.148	3.76	3.250	82.55	1.263	32.08	0.958	24.33	63.35	281.81	31.88	5.58	**C1880-148-3250-S**	1.535	38.99	47.55	211.50	27.72	4.85
C1880-148-3500-M	1.880	47.75	0.148	3.76	3.500	88.90	1.345	34.16	1.013	25.72	63.35	281.81	29.40	5.14	**C1880-148-3500-S**	1.640	41.65	47.55	211.50	25.56	4.47
C1880-148-3750-M	1.880	47.75	0.148	3.76	3.750	95.25	1.427	36.23	1.067	27.11	63.35	281.81	27.27	4.77	**C1880-148-3750-S**	1.745	44.32	47.55	211.50	23.71	4.15
C1880-148-4000-M	1.880	47.75	0.148	3.76	4.000	101.60	1.508	38.31	1.122	28.50	63.35	281.81	25.43	4.45	**C1880-148-4000-S**	1.850	46.98	47.55	211.50	22.11	3.87
C1880-148-4250-M	1.880	47.75	0.148	3.76	4.250	107.95	1.590	40.39	1.177	29.89	63.35	281.81	23.82	4.17	**C1880-148-4250-S**	1.954	49.64	47.55	211.50	20.71	3.62
C1880-148-4500-M	1.880	47.75	0.148	3.76	4.500	114.30	1.672	42.47	1.232	31.28	63.35	281.81	22.40	3.92	**C1880-148-4500-S**	2.059	52.31	47.55	211.50	19.48	3.41
C1880-148-4750-M	1.880	47.75	0.148	3.76	4.750	120.65	1.754	44.55	1.286	32.67	63.35	281.81	21.15	3.70	**C1880-148-4750-S**	2.164	54.97	47.55	211.50	18.39	3.22
C1880-148-5000-M	1.880	47.75	0.148	3.76	5.000	127.00	1.836	46.63	1.341	34.06	63.35	281.81	20.02	3.50	**C1880-148-5000-S**	2.269	57.63	47.55	211.50	17.41	3.05
C1880-148-5250-M	1.880	47.75	0.148	3.76	5.250	133.35	1.917	48.70	1.396	35.46	63.35	281.81	19.01	3.33	**C1880-148-5250-S**	2.374	60.30	47.55	211.50	16.53	2.89
C1880-148-5500-M	1.880	47.75	0.148	3.76	5.500	139.70	1.999	50.78	1.451	36.85	63.35	281.81	18.10	3.17	**C1880-148-5500-S**	2.479	62.96	47.55	211.50	15.74	2.75
C1880-148-5750-M	1.880	47.75	0.148	3.76	5.750	146.05	2.081	52.86	1.505	38.24	63.35	281.81	17.27	3.02	**C1880-148-5750-S**	2.584	65.62	47.55	211.50	15.02	2.63
C1880-148-6000-M	1.880	47.75	0.148	3.76	6.000	152.40	2.163	54.94	1.560	39.63	63.35	281.81	16.51	2.89	**C1880-148-6000-S**	2.688	68.29	47.55	211.50	14.36	2.51
C1880-148-6250-M	1.880	47.75	0.148	3.76	6.250	158.75	2.245	57.02	1.615	41.02	63.35	281.81	15.82	2.77	**C1880-148-6250-S**	2.793	70.95	47.55	211.50	13.76	2.41
C1880-148-6500-M	1.880	47.75	0.148	3.76	6.500	165.10	2.327	59.10	1.670	42.41	63.35	281.81	15.18	2.66	**C1880-148-6500-S**	2.898	73.61	47.55	211.50	13.20	2.31
C1880-148-6750-M	1.880	47.75	0.148	3.76	6.750	171.45	2.408	61.17	1.724	43.80	63.35	281.81	14.59	2.55	**C1880-148-6750-S**	3.003	76.28	47.55	211.50	12.69	2.22
C1880-148-7000-M	1.880	47.75	0.148	3.76	7.000	177.80	2.490	63.25	1.779	45.19	63.35	281.81	14.05	2.46	**C1880-148-7000-S**	3.108	78.94	47.55	211.50	12.22	2.14
C1880-148-7500-M	1.880	47.75	0.148	3.76	7.500	190.50	2.654	67.41	1.889	47.97	63.35	281.81	13.07	2.29	**C1880-148-7500-S**	3.318	84.27	47.55	211.50	11.37	1.99
C1880-148-8000-M	1.880	47.75	0.148	3.76	8.000	203.20	2.818	71.57	1.998	50.75	63.35	281.81	12.23	2.14	**C1880-148-8000-S**	3.527	89.59	47.55	211.50	10.63	1.86
C1880-148-8500-M	1.880	47.75	0.148	3.76	8.500	215.90	2.981	75.72	2.108	53.54	63.35	281.81	11.48	2.01	**C1880-148-8500-S**	3.737	94.92	47.55	211.50	9.98	1.75
C1880-148-9000-M	1.880	47.75	0.148	3.76	9.000	228.60	3.145	79.88	2.217	56.32	63.35	281.81	10.82	1.89	**C1880-148-9000-S**	3.947	100.25	47.55	211.50	9.41	1.65
C1880-148-9500-M	1.880	47.75	0.148	3.76	9.500	241.30	3.309	84.04	2.327	59.10	63.35	281.81	10.23	1.79	**C1880-148-9500-S**	4.156	105.57	47.55	211.50	8.90	1.56
C1880-162-3000-M	1.880	47.75	0.162	4.12	3.000	76.20	1.290	32.76	1.037	26.35	81.48	362.46	47.64	8.34	**C1880-162-3000-S**	1.540	39.11	60.50	269.11	41.43	7.25
C1880-162-3250-M	1.880	47.75	0.162	4.12	3.250	82.55	1.380	35.05	1.102	28.00	81.48	362.46	43.57	7.63	**C1880-162-3250-S**	1.653	41.99	60.50	269.11	37.89	6.63
C1880-162-3500-M	1.880	47.75	0.162	4.12	3.500	88.90	1.470	37.34	1.168	29.66	81.48	362.46	40.14	7.03	**C1880-162-3500-S**	1.767	44.88	60.50	269.11	34.91	6.11
C1880-162-3750-M	1.880	47.75	0.162	4.12	3.750	95.25	1.560	39.63	1.233	31.31	81.48	362.46	37.21	6.51	**C1880-162-3750-S**	1.880	47.76	60.50	269.11	32.36	5.66
C1880-162-4000-M	1.880	47.75	0.162	4.12	4.000	101.60	1.651	41.93	1.298	32.96	81.48	362.46	34.68	6.07	**C1880-162-4000-S**	1.994	50.65	60.50	269.11	30.16	5.28
C1880-162-4250-M	1.880	47.75	0.162	4.12	4.250	107.95	1.741	44.22	1.363	34.62	81.48	362.46	32.47	5.68	**C1880-162-4250-S**	2.108	53.53	60.50	269.11	28.24	4.94
C1880-162-4500-M	1.880	47.75	0.162	4.12	4.500	114.30	1.831	46.51	1.428	36.27	81.48	362.46	30.53	5.34	**C1880-162-4500-S**	2.221	56.42	60.50	269.11	26.55	4.65
C1880-162-4750-M	1.880	47.75	0.162	4.12	4.750	120.65	1.921	48.80	1.493	37.93	81.48	362.46	28.81	5.04	**C1880-162-4750-S**	2.335	59.30	60.50	269.11	25.05	4.38
C1880-162-5000-M	1.880	47.75	0.162	4.12	5.000	127.00	2.011	51.09	1.558	39.58	81.48	362.46	27.27	4.77	**C1880-162-5000-S**	2.448	62.19	60.50	269.11	23.71	4.15
C1880-162-5250-M	1.880	47.75	0.162	4.12	5.250	133.35	2.102	53.38	1.623	41.24	81.48	362.46	25.88	4.53	**C1880-162-5250-S**	2.562	65.07	60.50	269.11	22.51	3.94
C1880-162-5500-M	1.880	47.75	0.162	4.12	5.500	139.70	2.192	55.67	1.689	42.89	81.48	362.46	24.63	4.31	**C1880-162-5500-S**	2.675	67.96	60.50	269.11	21.42	3.75
C1880-162-5750-M	1.880	47.75	0.162	4.12	5.750	146.05	2.282	57.97	1.754	44.54	81.48	362.46	23.50	4.11	**C1880-162-5750-S**	2.789	70.84	60.50	269.11	20.43	3.58
C1880-162-6000-M	1.880	47.75	0.162	4.12	6.000	152.40	2.372	60.26	1.819	46.20	81.48	362.46	22.46	3.93	**C1880-162-6000-S**	2.903	73.73	60.50	269.11	19.53	3.42
C1880-162-6250-M	1.880	47.75	0.162	4.12	6.250	158.75	2.463	62.55	1.884	47.85	81.48	362.46	21.51	3.76	**C1880-162-6250-S**	3.016	76.61	60.50	269.11	18.71	3.27
C1880-162-6500-M	1.880	47.75	0.162	4.12	6.500	165.10	2.553	64.84	1.949	49.51	81.48	362.46	20.64	3.61	**C1880-162-6500-S**	3.130	79.50	60.50	269.11	17.95	3.14

SPEC TO ORDER: WWW.ASRAYMOND.COM OR SEE PHONE & FAX NUMBERS ON THE BACK COVER

Part Numbers with an "*" are squared and not ground. **Part Numbers in bold** represent the newly expanded Associated Spring RAYMOND compression spring offering.

MUSIC WIRE															STAINLESS STEEL					
Catalog #	Outside Diameter (OD)		Wire Diameter (d)		Free Length (L) Approx		Load Length (L_1)		Solid Height (Sh) Approx		Load (P) at L_1		Spring Rate (R)		Catalog #	Load Length (L_1)		Load (P) at L_1		Spring Rate (R)	
	in	mm	in	mm	in	mm	in	mm	in	mm	lb	N	lb/in	N/mm		in	mm	lb	N	lb/in	N/mm
C1880-162-6750-M	1.880	47.75	0.162	4.12	6.750	171.45	2.643	67.13	2.014	51.16	81.48	362.46	19.84	3.47	**C1880-162-6750-S**	3.243	82.38	60.50	269.11	17.25	3.02
C1880-162-7000-M	1.880	47.75	0.162	4.12	7.000	177.80	2.733	69.42	2.079	52.81	81.48	362.46	19.10	3.34	**C1880-162-7000-S**	3.357	85.27	60.50	269.11	16.61	2.91
C1880-162-7500-M	1.880	47.75	0.162	4.12	7.500	190.50	2.914	74.01	2.210	56.12	81.48	362.46	17.77	3.11	**C1880-162-7500-S**	3.584	91.03	60.50	269.11	15.45	2.70
C1880-162-8000-M	1.880	47.75	0.162	4.12	8.000	203.20	3.094	78.59	2.340	59.43	81.48	362.46	16.61	2.91	**C1880-162-8000-S**	3.811	96.80	60.50	269.11	14.44	2.53
C1880-162-8500-M*	1.880	47.75	0.162	4.12	8.500	215.90	3.378	85.80	2.598	65.99	81.48	362.46	15.91	2.78	**C1880-162-8500-S***	4.127	104.82	60.50	269.11	13.83	2.42
C1880-162-9000-M*	1.880	47.75	0.162	4.12	9.000	228.60	3.559	90.39	2.728	69.30	81.48	362.46	14.98	2.62	**C1880-162-9000-S***	4.354	110.59	60.50	269.11	13.02	2.28
C1880-162-9500-M*	1.880	47.75	0.162	4.12	9.500	241.30	3.739	94.97	2.858	72.61	81.48	362.46	14.14	2.48	**C1880-162-9500-S***	4.581	116.36	60.50	269.11	12.30	2.15
C1880-177-2875-M	1.880	47.75	0.177	4.50	2.875	73.03	1.358	34.49	1.145	29.07	104.22	463.61	68.70	12.02	**C1880-177-2875-S**	1.594	40.50	76.50	340.27	59.73	10.45
C1880-177-3000-M	1.880	47.75	0.177	4.50	3.000	76.20	1.408	35.75	1.183	30.04	104.22	463.61	65.45	11.45	**C1880-177-3000-S**	1.656	42.06	76.50	340.27	56.91	9.96
C1880-177-3250-M	1.880	47.75	0.177	4.50	3.250	82.55	1.507	38.28	1.260	31.99	104.22	463.61	59.80	10.46	**C1880-177-3250-S**	1.779	45.18	76.50	340.27	52.00	9.10
C1880-177-3500-M	1.880	47.75	0.177	4.50	3.500	88.90	1.607	40.81	1.336	33.94	104.22	463.61	55.05	9.63	**C1880-177-3500-S**	1.902	48.31	76.50	340.27	47.87	8.38
C1880-177-3750-M	1.880	47.75	0.177	4.50	3.750	95.25	1.706	43.34	1.413	35.89	104.22	463.61	51.00	8.92	**C1880-177-3750-S**	2.025	51.43	76.50	340.27	44.34	7.76
C1880-177-4000-M	1.880	47.75	0.177	4.50	4.000	101.60	1.806	45.87	1.489	37.83	104.22	463.61	47.50	8.31	**C1880-177-4000-S**	2.148	54.56	76.50	340.27	41.30	7.23
C1880-177-4250-M	1.880	47.75	0.177	4.50	4.250	107.95	1.905	48.39	1.566	39.78	104.22	463.61	44.45	7.78	**C1880-177-4250-S**	2.271	57.68	76.50	340.27	38.65	6.76
C1880-177-4500-M	1.880	47.75	0.177	4.50	4.500	114.30	2.005	50.92	1.643	41.73	104.22	463.61	41.77	7.31	**C1880-177-4500-S**	2.394	60.81	76.50	340.27	36.32	6.36
C1880-177-4750-M	1.880	47.75	0.177	4.50	4.750	120.65	2.104	53.45	1.719	43.67	104.22	463.61	39.40	6.89	**C1880-177-4750-S**	2.517	63.93	76.50	340.27	34.26	5.99
C1880-177-5000-M	1.880	47.75	0.177	4.50	5.000	127.00	2.204	55.98	1.796	45.62	104.22	463.61	37.28	6.52	**C1880-177-5000-S**	2.640	67.06	76.50	340.27	32.41	5.67
C1880-177-5250-M	1.880	47.75	0.177	4.50	5.250	133.35	2.303	58.51	1.873	47.57	104.22	463.61	35.37	6.19	**C1880-177-5250-S**	2.763	70.18	76.50	340.27	30.76	5.38
C1880-177-5500-M	1.880	47.75	0.177	4.50	5.500	139.70	2.403	61.04	1.949	49.51	104.22	463.61	33.65	5.89	**C1880-177-5500-S**	2.886	73.30	76.50	340.27	29.26	5.12
C1880-177-5750-M	1.880	47.75	0.177	4.50	5.750	146.05	2.503	63.56	2.026	51.46	104.22	463.61	32.09	5.62	**C1880-177-5750-S**	3.009	76.43	76.50	340.27	27.91	4.88
C1880-177-6000-M	1.880	47.75	0.177	4.50	6.000	152.40	2.602	66.09	2.103	53.41	104.22	463.61	30.67	5.37	**C1880-177-6000-S**	3.132	79.55	76.50	340.27	26.67	4.67
C1880-177-6250-M	1.880	47.75	0.177	4.50	6.250	158.75	2.702	68.62	2.179	55.35	104.22	463.61	29.37	5.14	**C1880-177-6250-S**	3.255	82.68	76.50	340.27	25.54	4.47
C1880-177-6500-M	1.880	47.75	0.177	4.50	6.500	165.10	2.801	71.15	2.256	57.30	104.22	463.61	28.18	4.93	**C1880-177-6500-S**	3.378	85.80	76.50	340.27	24.50	4.29
C1880-177-6750-M	1.880	47.75	0.177	4.50	6.750	171.45	2.901	73.68	2.332	59.25	104.22	463.61	27.08	4.74	**C1880-177-6750-S**	3.501	88.93	76.50	340.27	23.54	4.12
C1880-177-7000-M*	1.880	47.75	0.177	4.50	7.000	177.80	3.107	78.91	2.541	64.53	104.22	463.61	26.77	4.68	**C1880-177-7000-S***	3.714	94.33	76.50	340.27	23.28	4.07
C1880-177-7500-M*	1.880	47.75	0.177	4.50	7.500	190.50	3.306	83.97	2.694	68.43	104.22	463.61	24.85	4.35	**C1880-177-7500-S***	3.960	100.58	76.50	340.27	21.61	3.78
C1880-177-8000-M*	1.880	47.75	0.177	4.50	8.000	203.20	3.505	89.03	2.847	72.32	104.22	463.61	23.19	4.06	**C1880-177-8000-S***	4.206	106.83	76.50	340.27	20.16	3.53
C1880-177-8500-M*	1.880	47.75	0.177	4.50	8.500	215.90	3.704	94.08	3.001	76.21	104.22	463.61	21.73	3.80	**C1880-177-8500-S***	4.452	113.08	76.50	340.27	18.90	3.31
C1880-177-9000-M*	1.880	47.75	0.177	4.50	9.000	228.60	3.903	99.14	3.154	80.11	104.22	463.61	20.45	3.58	**C1880-177-9000-S***	4.698	119.33	76.50	340.27	17.78	3.11
C1880-177-9500-M*	1.880	47.75	0.177	4.50	9.500	241.30	4.102	104.20	3.307	84.00	104.22	463.61	19.31	3.38	**C1880-177-9500-S***	4.944	125.58	76.50	340.27	16.79	2.94
C1880-192-2750-M	1.880	47.75	0.192	4.88	2.750	69.85	1.416	35.96	1.240	31.48	130.61	580.98	97.90	17.13	**C1880-192-2750-S**	1.637	41.58	94.76	421.53	85.13	14.90
C1880-192-2875-M	1.880	47.75	0.192	4.88	2.875	73.03	1.470	37.35	1.284	32.61	130.61	580.98	92.99	16.27	**C1880-192-2875-S**	1.703	43.26	94.76	421.53	80.86	14.15
C1880-192-3000-M	1.880	47.75	0.192	4.88	3.000	76.20	1.525	38.73	1.328	33.73	130.61	580.98	88.55	15.50	**C1880-192-3000-S**	1.769	44.94	94.76	421.53	77.00	13.47
C1880-192-3250-M	1.880	47.75	0.192	4.88	3.250	82.55	1.634	41.50	1.416	35.97	130.61	580.98	80.82	14.14	**C1880-192-3250-S**	1.902	48.30	94.76	421.53	70.28	12.30
C1880-192-3500-M	1.880	47.75	0.192	4.88	3.500	88.90	1.743	44.27	1.505	38.22	130.61	580.98	74.34	13.01	**C1880-192-3500-S**	2.034	51.66	94.76	421.53	64.64	11.31
C1880-192-3750-M	1.880	47.75	0.192	4.88	3.750	95.25	1.852	47.04	1.593	40.46	130.61	580.98	68.82	12.04	**C1880-192-3750-S**	2.166	55.03	94.76	421.53	59.84	10.47
C1880-192-4000-M	1.880	47.75	0.192	4.88	4.000	101.60	1.961	49.81	1.681	42.71	130.61	580.98	64.06	11.21	**C1880-192-4000-S**	2.299	58.39	94.76	421.53	55.70	9.75
C1880-192-4250-M	1.880	47.75	0.192	4.88	4.250	107.95	2.070	52.58	1.770	44.95	130.61	580.98	59.92	10.49	**C1880-192-4250-S**	2.431	61.75	94.76	421.53	52.10	9.12
C1880-192-4500-M	1.880	47.75	0.192	4.88	4.500	114.30	2.179	55.35	1.858	47.20	130.61	580.98	56.28	9.85	**C1880-192-4500-S**	2.564	65.11	94.76	421.53	48.94	8.56
C1880-192-4750-M	1.880	47.75	0.192	4.88	4.750	120.65	2.288	58.12	1.947	49.44	130.61	580.98	53.06	9.28	**C1880-192-4750-S**	2.696	68.48	94.76	421.53	46.14	8.07
C1880-192-5000-M	1.880	47.75	0.192	4.88	5.000	127.00	2.397	60.89	2.035	51.69	130.61	580.98	50.18	8.78	**C1880-192-5000-S**	2.828	71.84	94.76	421.53	43.64	7.64
C1880-192-5250-M	1.880	47.75	0.192	4.88	5.250	133.35	2.506	63.66	2.123	53.93	130.61	580.98	47.60	8.33	**C1880-192-5250-S**	2.961	75.20	94.76	421.53	41.40	7.24
C1880-192-5500-M	1.880	47.75	0.192	4.88	5.500	139.70	2.615	66.43	2.212	56.18	130.61	580.98	45.28	7.92	**C1880-192-5500-S**	3.093	78.56	94.76	421.53	39.37	6.89
C1880-192-5750-M	1.880	47.75	0.192	4.88	5.750	146.05	2.724	69.20	2.300	58.42	130.61	580.98	43.17	7.55	**C1880-192-5750-S**	3.225	81.93	94.76	421.53	37.54	6.57
C1880-192-6000-M	1.880	47.75	0.192	4.88	6.000	152.40	2.833	71.97	2.388	60.66	130.61	580.98	41.25	7.22	**C1880-192-6000-S**	3.358	85.29	94.76	421.53	35.87	6.28
C1880-192-6250-M	1.880	47.75	0.192	4.88	6.250	158.75	2.942	74.74	2.477	62.91	130.61	580.98	39.49	6.91	**C1880-192-6250-S**	3.490	88.65	94.76	421.53	34.34	6.01
C1880-192-6500-M	1.880	47.75	0.192	4.88	6.500	165.10	3.052	77.51	2.565	65.15	130.61	580.98	37.87	6.63	**C1880-192-6500-S**	3.623	92.01	94.76	421.53	32.93	5.76
C1880-192-6750-M*	1.880	47.75	0.192	4.88	6.750	171.45	3.269	83.03	2.787	70.80	130.61	580.98	37.52	6.57	**C1880-192-6750-S***	3.845	97.67	94.76	421.53	32.63	5.71
C1880-192-7000-M*	1.880	47.75	0.192	4.88	7.000	177.80	3.378	85.80	2.876	73.04	130.61	580.98	36.06	6.31	**C1880-192-7000-S***	3.978	101.03	94.76	421.53	31.36	5.49
C1880-192-7500-M*	1.880	47.75	0.192	4.88	7.500	190.50	3.596	91.34	3.052	77.53	130.61	580.98	33.46	5.85	**C1880-192-7500-S***	4.243	107.76	94.76	421.53	29.09	5.09
C1880-192-8000-M*	1.880	47.75	0.192	4.88	8.000	203.20	3.814	96.88	3.229	82.02	130.61	580.98	31.20	5.46	**C1880-192-8000-S***	4.507	114.48	94.76	421.53	27.13	4.75
C1880-192-8500-M*	1.880	47.75	0.192	4.88	8.500	215.90	4.032	102.42	3.406	86.51	130.61	580.98	29.23	5.12	**C1880-192-8500-S***	4.772	121.21	94.76	421.53	25.42	4.45
C1880-192-9000-M*	1.880	47.75	0.192	4.88	9.000	228.60	4.250	107.95	3.583	91.00	130.61	580.98	27.50	4.81	**C1880-192-9000-S***	5.037	127.93	94.76	421.53	23.91	4.18
C1880-192-9500-M*	1.880	47.75	0.192	4.88	9.500	241.30	4.468	113.49	3.759	95.49	130.61	580.98	25.96	4.54	**C1880-192-9500-S***	5.302	134.66	94.76	421.53	22.57	3.95
C1880-207-2625-M	1.880	47.75	0.207	5.26	2.625	66.68	1.462	37.15	1.320	33.53	160.85	715.49	138.36	24.21	**C1880-207-2625-S**	1.666	42.32	115.38	513.23	120.31	21.05
C1880-207-2750-M	1.880	47.75	0.207	5.26	2.750	69.85	1.522	38.65	1.370	34.80	160.85	715.49	130.95	22.92	**C1880-207-2750-S**	1.737	44.11	115.38	513.23	113.87	19.93
C1880-207-2875-M	1.880	47.75	0.207	5.26	2.875	73.03	1.581	40.16	1.420	36.07	160.85	715.49	124.30	21.75	**C1880-207-2875-S**	1.808	45.91	115.38	513.23	108.09	18.92
C1880-207-3000-M	1.880	47.75	0.207	5.26	3.000	76.20	1.640	41.66	1.470	37.35	160.85	715.49	118.29	20.70	**C1880-207-3000-S**	1.878	47.71	115.38	513.23	102.86	18.00
C1880-207-3250-M	1.880	47.75	0.207	5.26	3.250	82.55	1.759	44.67	1.570	39.89	160.85	715.49	107.87	18.88	**C1880-207-3250-S**	2.020	51.31	115.38	513.23	93.80	16.41
C1880-207-3500-M	1.880	47.75	0.207	5.26	3.500	88.90	1.877	47.68	1.671	42.43	160.85	715.49	99.13	17.35	**C1880-207-3500-S**	2.161	54.90	115.38	513.23	86.20	15.08
C1880-207-3750-M	1.880	47.75	0.207	5.26	3.750	95.25	1.996	50.70	1.771	44.98	160.85	715.49	91.70	16.05	**C1880-207-3750-S**	2.303	58.50	115.38	513.23	79.74	13.95
C1880-207-4000-M	1.880	47.75	0.207	5.26	4.000	101.60	2.114	53.71	1.871	47.52	160.85	715.49	85.31	14.93	**C1880-207-4000-S**	2.445	62.09	115.38	513.23	74.18	12.98
C1880-207-4250-M	1.880	47.75	0.207	5.26	4.250	107.95	2.233	56.72	1.971	50.06	160.85	715.49	79.75	13.96	**C1880-207-4250-S**	2.586	65.69	115.38	513.23	69.35	12.14
C1880-207-4500-M	1.880	47.75	0.207	5.26	4.500	114.30	2.352	59.73	2.071	52.60	160.85	715.49	74.87	13.10	**C1880-207-4500-S**	2.728	69.28	115.38	513.23	65.10	11.39

FOR INFORMATION ON ALTERNATIVE FINISHES, SEE PAGE 311

Part Numbers with an "*" are squared and not ground. **Part Numbers in bold** represent the newly expanded Associated Spring RAYMOND compression spring offering.

MUSIC WIRE															STAINLESS STEEL						
Catalog #	Outside Diameter (OD)		Wire Diameter (d)		Free Length (L) Approx		Load Length (L_1)		Solid Height (Sh) Approx		Load (P) at L_1		Spring Rate (R)		Catalog #	Load Length (L_1)		Load (P) at L_1		Spring Rate (R)	
	in	mm	in	mm	in	mm	in	mm	in	mm	lb	N	lb/in	N/mm		in	mm	lb	N	lb/in	N/mm
C1880-207-4750-M	1.880	47.75	0.207	5.26	4.750	120.65	2.470	62.74	2.171	55.15	160.85	715.49	70.55	12.35	**C1880-207-4750-S**	2.869	72.88	115.38	513.23	61.35	10.74
C1880-207-5000-M	1.880	47.75	0.207	5.26	5.000	127.00	2.589	65.75	2.271	57.69	160.85	715.49	66.71	11.67	**C1880-207-5000-S**	3.011	76.48	115.38	513.23	58.00	10.15
C1880-207-5250-M	1.880	47.75	0.207	5.26	5.250	133.35	2.707	68.76	2.371	60.23	160.85	715.49	63.26	11.07	**C1880-207-5250-S**	3.152	80.07	115.38	513.23	55.01	9.63
C1880-207-5500-M	1.880	47.75	0.207	5.26	5.500	139.70	2.826	71.77	2.471	62.78	160.85	715.49	60.15	10.53	**C1880-207-5500-S**	3.294	83.67	115.38	513.23	52.30	9.15
C1880-207-5750-M	1.880	47.75	0.207	5.26	5.750	146.05	2.944	74.78	2.572	65.32	160.85	715.49	57.33	10.03	**C1880-207-5750-S**	3.436	87.26	115.38	513.23	49.85	8.72
C1880-207-6000-M	1.880	47.75	0.207	5.26	6.000	152.40	3.063	77.80	2.672	67.86	160.85	715.49	54.76	9.58	**C1880-207-6000-S**	3.577	90.86	115.38	513.23	47.62	8.33
C1880-207-6250-M	1.880	47.75	0.207	5.26	6.250	158.75	3.181	80.81	2.772	70.41	160.85	715.49	52.42	9.17	**C1880-207-6250-S**	3.719	94.45	115.38	513.23	45.58	7.98
C1880-207-6500-M	1.880	47.75	0.207	5.26	6.500	165.10	3.300	83.82	2.872	72.95	160.85	715.49	50.26	8.80	**C1880-207-6500-S**	3.860	98.05	115.38	513.23	43.71	7.65
C1880-207-6750-M	1.880	47.75	0.207	5.26	6.750	171.45	3.418	86.83	2.972	75.49	160.85	715.49	48.28	8.45	**C1880-207-6750-S**	4.002	101.65	115.38	513.23	41.98	7.35
C1880-207-7000-M	1.880	47.75	0.207	5.26	7.000	177.80	3.537	89.84	3.072	78.03	160.85	715.49	46.45	8.13	**C1880-207-7000-S**	4.143	105.24	115.38	513.23	40.39	7.07
C1880-207-7500-M	1.880	47.75	0.207	5.26	7.500	190.50	3.774	95.86	3.272	83.12	160.85	715.49	43.17	7.55	**C1880-207-7500-S**	4.426	112.43	115.38	513.23	37.54	6.57
C1880-207-8000-M*	1.880	47.75	0.207	5.26	8.000	203.20	4.120	104.65	3.607	91.62	160.85	715.49	41.46	7.25	**C1880-207-8000-S***	4.799	121.90	115.38	513.23	36.05	6.31
C1880-207-8500-M*	1.880	47.75	0.207	5.26	8.500	215.90	4.357	110.67	3.807	96.71	160.85	715.49	38.83	6.79	**C1880-207-8500-S***	5.083	129.10	115.38	513.23	33.76	5.91
C1880-207-9000-M*	1.880	47.75	0.207	5.26	9.000	228.60	4.594	116.69	4.008	101.79	160.85	715.49	36.51	6.39	**C1880-207-9000-S***	5.366	136.29	115.38	513.23	31.75	5.56
C1880-207-9500-M*	1.880	47.75	0.207	5.26	9.500	241.30	4.831	122.72	4.208	106.88	160.85	715.49	34.45	6.03	**C1880-207-9500-S***	5.649	143.48	115.38	513.23	29.96	5.24
C1880-225-2625-M	1.880	47.75	0.225	5.72	2.625	66.68	1.579	40.11	1.464	37.19	202.50	900.77	193.61	33.88	**C1880-225-2625-S**	1.774	45.05	143.30	637.44	168.36	29.46
C1880-225-2750-M	1.880	47.75	0.225	5.72	2.750	69.85	1.644	41.76	1.521	38.64	202.50	900.77	183.09	32.04	**C1880-225-2750-S**	1.850	46.99	143.30	637.44	159.21	27.86
C1880-225-2875-M	1.880	47.75	0.225	5.72	2.875	73.03	1.709	43.40	1.578	40.09	202.50	900.77	173.65	30.39	**C1880-225-2875-S**	1.926	48.92	143.30	637.44	151.00	26.42
C1880-225-3000-M	1.880	47.75	0.225	5.72	3.000	76.20	1.774	45.05	1.635	41.53	202.50	900.77	165.14	28.90	**C1880-225-3000-S**	2.002	50.85	143.30	637.44	143.60	25.13
C1880-225-3250-M	1.880	47.75	0.225	5.72	3.250	82.55	1.904	48.35	1.749	44.43	202.50	900.77	150.39	26.32	**C1880-225-3250-S**	2.154	54.72	143.30	637.44	130.78	22.89
C1880-225-3500-M	1.880	47.75	0.225	5.72	3.500	88.90	2.033	51.65	1.863	47.33	202.50	900.77	138.07	24.16	**C1880-225-3500-S**	2.306	58.58	143.30	637.44	120.06	21.01
C1880-225-3750-M	1.880	47.75	0.225	5.72	3.750	95.25	2.163	54.94	1.977	50.22	202.50	900.77	127.61	22.33	**C1880-225-3750-S**	2.459	62.45	143.30	637.44	110.96	19.42
C1880-225-4000-M	1.880	47.75	0.225	5.72	4.000	101.60	2.293	58.24	2.091	53.12	202.50	900.77	118.62	20.76	**C1880-225-4000-S**	2.611	66.31	143.30	637.44	103.15	18.05
C1880-225-4250-M	1.880	47.75	0.225	5.72	4.250	107.95	2.423	61.53	2.205	56.01	202.50	900.77	110.82	19.39	**C1880-225-4250-S**	2.763	70.18	143.30	637.44	96.36	16.86
C1880-225-4500-M	1.880	47.75	0.225	5.72	4.500	114.30	2.552	64.83	2.319	58.91	202.50	900.77	103.98	18.20	**C1880-225-4500-S**	2.915	74.04	143.30	637.44	90.41	15.82
C1880-225-4750-M	1.880	47.75	0.225	5.72	4.750	120.65	2.682	68.13	2.433	61.80	202.50	900.77	97.93	17.14	**C1880-225-4750-S**	3.067	77.91	143.30	637.44	85.16	14.90
C1880-225-5000-M	1.880	47.75	0.225	5.72	5.000	127.00	2.812	71.42	2.547	64.70	202.50	900.77	92.55	16.20	**C1880-225-5000-S**	3.219	81.77	143.30	637.44	80.48	14.08
C1880-225-5250-M	1.880	47.75	0.225	5.72	5.250	133.35	2.942	74.72	2.661	67.59	202.50	900.77	87.73	15.35	**C1880-225-5250-S**	3.372	85.64	143.30	637.44	76.29	13.35
C1880-225-5500-M	1.880	47.75	0.225	5.72	5.500	139.70	3.072	78.02	2.775	70.49	202.50	900.77	83.39	14.59	**C1880-225-5500-S**	3.524	89.50	143.30	637.44	72.51	12.69
C1880-225-5750-M	1.880	47.75	0.225	5.72	5.750	146.05	3.201	81.31	2.889	73.38	202.50	900.77	79.45	13.90	**C1880-225-5750-S**	3.676	93.37	143.30	637.44	69.09	12.09
C1880-225-6000-M	1.880	47.75	0.225	5.72	6.000	152.40	3.331	84.61	3.003	76.28	202.50	900.77	75.87	13.28	**C1880-225-6000-S**	3.828	97.23	143.30	637.44	65.98	11.55
C1880-225-6250-M	1.880	47.75	0.225	5.72	6.250	158.75	3.461	87.91	3.117	79.17	202.50	900.77	72.60	12.71	**C1880-225-6250-S**	3.980	101.10	143.30	637.44	63.13	11.05
C1880-225-6500-M	1.880	47.75	0.225	5.72	6.500	165.10	3.591	91.20	3.231	82.07	202.50	900.77	69.60	12.18	**C1880-225-6500-S**	4.132	104.96	143.30	637.44	60.53	10.59
C1880-225-6750-M	1.880	47.75	0.225	5.72	6.750	171.45	3.720	94.50	3.345	84.96	202.50	900.77	66.84	11.70	**C1880-225-6750-S**	4.285	108.83	143.30	637.44	58.12	10.17
C1880-225-7000-M	1.880	47.75	0.225	5.72	7.000	177.80	3.850	97.80	3.459	87.86	202.50	900.77	64.29	11.25	**C1880-225-7000-S**	4.437	112.69	143.30	637.44	55.90	9.78
C1880-225-7500-M	1.880	47.75	0.225	5.72	7.500	190.50	4.110	104.39	3.687	93.65	202.50	900.77	59.73	10.45	**C1880-225-7500-S**	4.741	120.42	143.30	637.44	51.94	9.09
C1880-225-8000-M	1.880	47.75	0.225	5.72	8.000	203.20	4.369	110.98	3.915	99.44	202.50	900.77	55.78	9.76	**C1880-225-8000-S**	5.045	128.15	143.30	637.44	48.50	8.49
C1880-225-8500-M	1.880	47.75	0.225	5.72	8.500	215.90	4.629	117.57	4.143	105.23	202.50	900.77	52.31	9.15	**C1880-225-8500-S**	5.350	135.88	143.30	637.44	45.49	7.96
C1880-225-9000-M	1.880	47.75	0.225	5.72	9.000	228.60	4.888	124.17	4.371	111.02	202.50	900.77	49.25	8.62	**C1880-225-9000-S**	5.654	143.61	143.30	637.44	42.83	7.49
C1880-225-9500-M	1.880	47.75	0.225	5.72	9.500	241.30	5.148	130.76	4.599	116.81	202.50	900.77	46.53	8.14	**C1880-225-9500-S**	5.958	151.34	143.30	637.44	40.46	7.08
C1880-250-2500-M	1.880	47.75	0.250	6.35	2.500	63.50	1.658	42.10	1.584	40.24	270.62	1203.77	321.26	56.22	**C1880-250-2500-S**	1.827	46.41	188.00	836.25	279.36	48.89
C1880-250-2625-M	1.880	47.75	0.250	6.35	2.625	66.68	1.730	43.94	1.651	41.93	270.62	1203.77	302.37	52.91	**C1880-250-2625-S**	1.910	48.51	188.00	836.25	262.93	46.01
C1880-250-2750-M	1.880	47.75	0.250	6.35	2.750	69.85	1.802	45.78	1.717	43.61	270.62	1203.77	285.57	49.97	**C1880-250-2750-S**	1.993	50.62	188.00	836.25	248.32	43.46
C1880-250-2875-M	1.880	47.75	0.250	6.35	2.875	73.03	1.875	47.62	1.783	45.29	270.62	1203.77	270.54	47.34	**C1880-250-2875-S**	2.076	52.73	188.00	836.25	235.25	41.17
C1880-250-3000-M	1.880	47.75	0.250	6.35	3.000	76.20	1.947	49.46	1.849	46.97	270.62	1203.77	257.01	44.98	**C1880-250-3000-S**	2.159	54.83	188.00	836.25	223.49	39.11
C1880-250-3250-M	1.880	47.75	0.250	6.35	3.250	82.55	2.092	53.13	1.982	50.34	270.62	1203.77	233.65	40.89	**C1880-250-3250-S**	2.325	59.05	188.00	836.25	203.17	35.55
C1880-250-3500-M	1.880	47.75	0.250	6.35	3.500	88.90	2.236	56.81	2.114	53.70	270.62	1203.77	214.18	37.48	**C1880-250-3500-S**	2.491	63.26	188.00	836.25	186.24	32.59
C1880-250-3750-M	1.880	47.75	0.250	6.35	3.750	95.25	2.381	60.48	2.247	57.06	270.62	1203.77	197.70	34.60	**C1880-250-3750-S**	2.656	67.47	188.00	836.25	171.91	30.08
C1880-250-4000-M	1.880	47.75	0.250	6.35	4.000	101.60	2.526	64.16	2.379	60.43	270.62	1203.77	183.58	32.13	**C1880-250-4000-S**	2.822	71.69	188.00	836.25	159.63	27.94
C1880-250-4250-M	1.880	47.75	0.250	6.35	4.250	107.95	2.671	67.83	2.511	63.79	270.62	1203.77	171.34	29.98	**C1880-250-4250-S**	2.988	75.90	188.00	836.25	148.99	26.07
C1880-250-4500-M	1.880	47.75	0.250	6.35	4.500	114.30	2.815	71.51	2.644	67.15	270.62	1203.77	160.63	28.11	**C1880-250-4500-S**	3.154	80.11	188.00	836.25	139.68	24.44
C1880-250-4750-M	1.880	47.75	0.250	6.35	4.750	120.65	2.960	75.18	2.776	70.52	270.62	1203.77	151.18	26.46	**C1880-250-4750-S**	3.320	84.33	188.00	836.25	131.46	23.01
C1880-250-5000-M	1.880	47.75	0.250	6.35	5.000	127.00	3.105	78.86	2.909	73.88	270.62	1203.77	142.78	24.99	**C1880-250-5000-S**	3.486	88.54	188.00	836.25	124.16	21.73
C1880-250-5250-M	1.880	47.75	0.250	6.35	5.250	133.35	3.249	82.53	3.041	77.25	270.62	1203.77	135.27	23.67	**C1880-250-5250-S**	3.652	92.75	188.00	836.25	117.63	20.58
C1880-250-5500-M	1.880	47.75	0.250	6.35	5.500	139.70	3.394	86.21	3.174	80.61	270.62	1203.77	128.51	22.49	**C1880-250-5500-S**	3.818	96.97	188.00	836.25	111.74	19.56
C1880-250-5750-M	1.880	47.75	0.250	6.35	5.750	146.05	3.539	89.89	3.306	83.97	270.62	1203.77	122.39	21.42	**C1880-250-5750-S**	3.983	101.18	188.00	836.25	106.42	18.62
C1880-250-6000-M	1.880	47.75	0.250	6.35	6.000	152.40	3.684	93.56	3.438	87.34	270.62	1203.77	116.82	20.44	**C1880-250-6000-S**	4.149	105.39	188.00	836.25	101.59	17.78
C1880-250-6250-M	1.880	47.75	0.250	6.35	6.250	158.75	3.828	97.24	3.571	90.70	270.62	1203.77	111.74	19.56	**C1880-250-6250-S**	4.315	109.61	188.00	836.25	97.17	17.00
C1880-250-6500-M	1.880	47.75	0.250	6.35	6.500	165.10	3.973	100.91	3.703	94.06	270.62	1203.77	107.09	18.74	**C1880-250-6500-S**	4.481	113.82	188.00	836.25	93.12	16.30
C1880-250-6750-M	1.880	47.75	0.250	6.35	6.750	171.45	4.118	104.59	3.836	97.43	270.62	1203.77	102.80	17.99	**C1880-250-6750-S**	4.647	118.03	188.00	836.25	89.40	15.64
C1880-250-7000-M	1.880	47.75	0.250	6.35	7.000	177.80	4.262	108.26	3.968	100.79	270.62	1203.77	98.85	17.30	**C1880-250-7000-S**	4.813	122.25	188.00	836.25	85.96	15.04
C1880-250-7500-M	1.880	47.75	0.250	6.35	7.500	190.50	4.552	115.61	4.233	107.52	270.62	1203.77	91.79	16.06	**C1880-250-7500-S**	5.145	130.67	188.00	836.25	79.82	13.97
C1880-250-8000-M	1.880	47.75	0.250	6.35	8.000	203.20	4.841	122.97	4.498	114.25	270.62	1203.77	85.67	14.99	**C1880-250-8000-S**	5.476	139.10	188.00	836.25	74.50	13.04
C1880-250-8500-M	1.880	47.75	0.250	6.35	8.500	215.90	5.131	130.32	4.763	120.97	270.62	1203.77	80.32	14.06	**C1880-250-8500-S**	5.808	147.53	188.00	836.25	69.84	12.22

Part Numbers with an "*" are squared and not ground. **Part Numbers in bold** represent the newly expanded Associated Spring RAYMOND compression spring offering.

MUSIC WIRE															STAINLESS STEEL					
Catalog #	Outside Diameter (OD)		Wire Diameter (d)		Free Length (L) Approx		Load Length (L_1)		Solid Height (Sh) Approx		Load (P) at L_1		Spring Rate (R)		Catalog #	Load Length (L_1)		Load (P) at L_1		Spring Rate (R)	
	in	mm	in	mm	in	mm	in	mm	in	mm	lb	N	lb/in	N/mm		in	mm	lb	N	lb/in	N/mm
C1880-250-9000-M	**1.880**	**47.75**	**0.250**	**6.35**	**9.000**	**228.60**	**5.420**	**137.67**	**5.028**	**127.70**	**270.62**	**1203.77**	**75.59**	**13.23**	**C1880-250-9000-S**	**6.140**	**155.95**	**188.00**	**836.25**	**65.73**	**11.50**
C1880-250-9500-M	**1.880**	**47.75**	**0.250**	**6.35**	**9.500**	**241.30**	**5.709**	**145.02**	**5.292**	**134.43**	**270.62**	**1203.77**	**71.39**	**12.49**	**C1880-250-9500-S**	**6.472**	**164.38**	**188.00**	**836.25**	**62.08**	**10.86**
C1937-148-2000-M	1.937	49.20	0.148	3.76	2.000	50.80	1.158	29.41	0.716	18.19	43.42	193.14	51.60	9.03	C1937-148-2000-S	1.158	29.41	36.17	160.89	42.98	7.52
C1937-148-2500-M	1.937	49.20	0.148	3.76	2.500	63.50	1.411	35.84	0.817	20.75	43.42	193.14	39.90	6.98	C1937-148-2500-S	1.411	35.84	36.17	160.89	33.24	5.82
C1937-148-3000-M	1.937	49.20	0.148	3.76	3.000	76.20	1.664	42.27	0.919	23.34	43.42	193.14	32.50	5.69	C1937-148-3000-S	1.664	42.27	36.17	160.89	27.07	4.74
C1937-148-3500-M	1.937	49.20	0.148	3.76	3.500	88.90	1.917	48.69	1.020	25.91	43.42	193.14	27.40	4.80	C1937-148-3500-S	1.917	48.69	36.17	160.89	22.82	3.99
C1937-148-4000-M	1.937	49.20	0.148	3.76	4.000	101.60	2.170	55.12	1.122	28.50	43.42	193.14	23.70	4.15	C1937-148-4000-S	2.170	55.12	36.17	160.89	19.74	3.45
C1937-148-4500-M	1.937	49.20	0.148	3.76	4.500	114.30	2.422	61.52	1.223	31.06	43.42	193.14	20.90	3.66	C1937-148-4500-S	2.422	61.52	36.17	160.89	17.41	3.05
C1937-148-5000-M	1.937	49.20	0.148	3.76	5.000	127.00	2.675	67.95	1.324	33.63	43.42	193.14	18.70	3.27	C1937-148-5000-S	2.675	67.95	36.17	160.89	15.58	2.73
C1937-148-5500-M	1.937	49.20	0.148	3.76	5.500	139.70	2.928	74.37	1.426	36.22	43.42	193.14	16.90	2.96	C1937-148-5500-S	2.928	74.37	36.17	160.89	14.08	2.46
C1937-162-2000-M	1.937	49.20	0.162	4.12	2.000	50.80	1.212	30.78	0.810	20.57	55.80	248.21	70.80	12.39	C1937-162-2000-S	1.212	30.78	46.48	206.76	58.98	10.32
C1937-162-2500-M	1.937	49.20	0.162	4.12	2.500	63.50	1.477	37.52	0.931	23.65	55.80	248.21	54.50	9.54	C1937-162-2500-S	1.477	37.52	46.48	206.76	45.40	7.94
C1937-162-3000-M	1.937	49.20	0.162	4.12	3.000	76.20	1.742	44.25	1.052	26.72	55.80	248.21	44.30	7.75	C1937-162-3000-S	1.742	44.25	46.48	206.76	36.90	6.46
C1937-162-3500-M	1.937	49.20	0.162	4.12	3.500	88.90	2.007	50.98	1.173	29.79	55.80	248.21	37.40	6.55	C1937-162-3500-S	2.007	50.98	46.48	206.76	31.15	5.45
C1937-162-4000-M	1.937	49.20	0.162	4.12	4.000	101.60	2.272	57.71	1.293	32.84	55.80	248.21	32.30	5.65	C1937-162-4000-S	2.272	57.71	46.48	206.76	26.91	4.71
C1937-162-4500-M	1.937	49.20	0.162	4.12	4.500	114.30	2.537	64.44	1.414	35.92	55.80	248.21	28.40	4.97	C1937-162-4500-S	2.537	64.44	46.48	206.76	23.66	4.14
C1937-162-5000-M	1.937	49.20	0.162	4.12	5.000	127.00	2.801	71.15	1.535	38.99	55.80	248.21	25.40	4.45	C1937-162-5000-S	2.801	71.15	46.48	206.76	21.16	3.70
C1937-162-5500-M	1.937	49.20	0.162	4.12	5.500	139.70	3.066	77.88	1.656	42.06	55.80	248.21	22.90	4.01	C1937-162-5500-S	3.066	77.88	46.48	206.76	19.08	3.34
C1937-177-2500-M	1.937	49.20	0.177	4.50	2.500	63.50	1.549	39.34	1.054	26.77	71.29	317.11	74.90	13.11	C1937-177-2500-S	1.549	39.34	59.38	264.16	62.39	10.92
C1937-177-3000-M	1.937	49.20	0.177	4.50	3.000	76.20	1.827	46.41	1.196	30.38	71.29	317.11	60.80	10.64	C1937-177-3000-S	1.827	46.41	59.38	264.16	50.65	8.86
C1937-177-3500-M	1.937	49.20	0.177	4.50	3.500	88.90	2.105	53.47	1.339	34.01	71.29	317.11	51.10	8.94	C1937-177-3500-S	2.105	53.47	59.38	264.16	42.57	7.45
C1937-177-4000-M	1.937	49.20	0.177	4.50	4.000	101.60	2.383	60.53	1.481	37.62	71.29	317.11	44.10	7.72	C1937-177-4000-S	2.383	60.53	59.38	264.16	36.74	6.43
C1937-177-4500-M	1.937	49.20	0.177	4.50	4.500	114.30	2.662	67.61	1.624	41.25	71.29	317.11	38.80	6.79	C1937-177-4500-S	2.662	67.61	59.38	264.16	32.32	5.66
C1937-177-5000-M	1.937	49.20	0.177	4.50	5.000	127.00	2.940	74.68	1.766	44.86	71.29	317.11	34.60	6.06	C1937-177-5000-S	2.940	74.68	59.38	264.16	28.82	5.04
C1937-177-5500-M	1.937	49.20	0.177	4.50	5.500	139.70	3.218	81.74	1.908	48.46	71.29	317.11	31.20	5.46	C1937-177-5500-S	3.218	81.74	59.38	264.16	25.99	4.55
C1937-177-6000-M	1.937	49.20	0.177	4.50	6.000	152.40	3.497	88.82	2.051	52.10	71.29	317.11	28.50	4.99	C1937-177-6000-S	3.497	88.82	59.38	264.16	23.74	4.15
C1937-192-2500-M	1.937	49.20	0.192	4.88	2.500	63.50	1.620	41.15	1.176	29.87	89.23	396.91	101.40	17.75	C1937-192-2500-S	1.620	41.15	74.33	330.63	84.47	14.78
C1937-192-3000-M	1.937	49.20	0.192	4.88	3.000	76.20	1.912	48.56	1.341	34.06	89.23	396.91	82.00	14.35	C1937-192-3000-S	1.912	48.56	74.33	330.63	68.31	11.95
C1937-192-3500-M	1.937	49.20	0.192	4.88	3.500	88.90	2.204	55.98	1.505	38.23	89.23	396.91	68.80	12.04	C1937-192-3500-S	2.204	55.98	74.33	330.63	57.31	10.03
C1937-192-4000-M	1.937	49.20	0.192	4.88	4.000	101.60	2.496	63.40	1.670	42.42	89.23	396.91	59.30	10.38	C1937-192-4000-S	2.496	63.40	74.33	330.63	49.40	8.64
C1937-192-4500-M	1.937	49.20	0.192	4.88	4.500	114.30	2.788	70.82	1.834	46.58	89.23	396.91	52.10	9.12	C1937-192-4500-S	2.788	70.82	74.33	330.63	43.40	7.59
C1937-192-5000-M	1.937	49.20	0.192	4.88	5.000	127.00	3.080	78.23	1.999	50.77	89.23	396.91	46.50	8.14	C1937-192-5000-S	3.080	78.23	74.33	330.63	38.74	6.78
C1937-192-5500-M	1.937	49.20	0.192	4.88	5.500	139.70	3.372	85.65	2.164	54.97	89.23	396.91	41.90	7.33	C1937-192-5500-S	3.372	85.65	74.33	330.63	34.90	6.11
C1937-192-6000-M	1.937	49.20	0.192	4.88	6.000	152.40	3.664	93.07	2.328	59.13	89.23	396.91	38.20	6.69	C1937-192-6000-S	3.664	93.07	74.33	330.63	31.82	5.57
C1937-207-2500-M	1.937	49.20	0.207	5.26	2.500	63.50	1.690	42.93	1.297	32.94	109.73	488.10	135.40	23.70	C1937-207-2500-S	1.690	42.93	91.41	406.59	112.79	19.74
C1937-207-3000-M	1.937	49.20	0.207	5.26	3.000	76.20	1.995	50.67	1.483	37.67	109.73	488.10	109.20	19.11	C1937-207-3000-S	1.995	50.67	91.41	406.59	90.96	15.92
C1937-207-3500-M	1.937	49.20	0.207	5.26	3.500	88.90	2.301	58.44	1.670	42.42	109.73	488.10	91.50	16.01	C1937-207-3500-S	2.301	58.45	91.41	406.59	76.22	13.34
C1937-207-4000-M	1.937	49.20	0.207	5.26	4.000	101.60	2.607	66.22	1.857	47.17	109.73	488.10	78.80	13.79	C1937-207-4000-S	2.607	66.22	91.41	406.59	65.64	11.49
C1937-207-4500-M	1.937	49.20	0.207	5.26	4.500	114.30	2.913	73.99	2.044	51.92	109.73	488.10	69.10	12.09	C1937-207-4500-S	2.913	73.99	91.41	406.59	57.56	10.07
C1937-207-5000-M	1.937	49.20	0.207	5.26	5.000	127.00	3.219	81.76	2.230	56.64	109.73	488.10	61.60	10.78	C1937-207-5000-S	3.219	81.76	91.41	406.59	51.31	8.98
C1937-207-5500-M	1.937	49.20	0.207	5.26	5.500	139.70	3.524	89.51	2.417	61.39	109.73	488.10	55.50	9.71	C1937-207-5500-S	3.524	89.51	91.41	406.59	46.23	8.09
C1937-207-6000-M	1.937	49.20	0.207	5.26	6.000	152.40	3.830	97.28	2.604	66.14	109.73	488.10	50.60	8.86	C1937-207-6000-S	3.830	97.28	91.41	406.59	42.15	7.38
C1937-225-2500-M	**1.937**	**49.20**	**0.225**	**5.72**	**2.500**	**63.50**	**1.477**	**37.51**	**1.361**	**34.57**	**198.51**	**883.03**	**194.00**	**33.95**	**C1937-225-2500-S**	**1.638**	**41.59**	**139.38**	**619.98**	**161.60**	**28.28**
C1937-225-3000-M	**1.937**	**49.20**	**0.225**	**5.72**	**3.000**	**76.20**	**1.733**	**44.01**	**1.584**	**40.24**	**197.71**	**879.46**	**156.00**	**27.30**	**C1937-225-3000-S**	**1.927**	**48.96**	**139.38**	**619.98**	**129.95**	**22.74**
C1937-225-3500-M	**1.937**	**49.20**	**0.225**	**5.72**	**3.500**	**88.90**	**1.979**	**50.28**	**1.797**	**45.63**	**199.20**	**886.08**	**131.00**	**22.93**	**C1937-225-3500-S**	**2.223**	**56.46**	**139.38**	**619.98**	**109.12**	**19.10**
C1937-225-4000-M	**1.937**	**49.20**	**0.225**	**5.72**	**4.000**	**101.60**	**2.236**	**56.80**	**2.021**	**51.34**	**197.54**	**878.70**	**112.00**	**19.60**	**C1937-225-4000-S**	**2.506**	**63.65**	**139.38**	**619.98**	**93.30**	**16.33**
C1937-225-4500-M	**1.937**	**49.20**	**0.225**	**5.72**	**4.500**	**114.30**	**2.490**	**63.25**	**2.242**	**56.96**	**196.95**	**876.06**	**98.00**	**17.15**	**C1937-225-4500-S**	**2.793**	**70.93**	**139.38**	**619.98**	**81.63**	**14.29**
C1937-225-5000-M	**1.937**	**49.20**	**0.225**	**5.72**	**5.000**	**127.00**	**2.728**	**69.30**	**2.444**	**62.07**	**199.92**	**889.29**	**88.00**	**15.40**	**C1937-225-5000-S**	**3.099**	**78.71**	**139.38**	**619.98**	**73.30**	**12.83**
C1937-225-5500-M	**1.937**	**49.20**	**0.225**	**5.72**	**5.500**	**139.70**	**2.985**	**75.82**	**2.668**	**67.77**	**198.69**	**883.81**	**79.00**	**13.83**	**C1937-225-5500-S**	**3.382**	**85.90**	**139.38**	**619.98**	**65.81**	**11.52**
C1937-225-6000-M	**1.937**	**49.20**	**0.225**	**5.72**	**6.000**	**152.40**	**3.233**	**82.11**	**2.882**	**73.19**	**199.24**	**886.26**	**72.00**	**12.60**	**C1937-225-6000-S**	**3.676**	**93.37**	**139.38**	**619.98**	**59.98**	**10.50**
C1937-250-2500-M	**1.937**	**49.20**	**0.250**	**6.35**	**2.500**	**63.50**	**1.638**	**41.62**	**1.561**	**39.64**	**255.01**	**1134.34**	**296.00**	**51.80**	**C1937-250-2500-S**	**1.758**	**44.66**	**182.92**	**813.67**	**246.57**	**43.15**
C1937-250-3000-M	**1.937**	**49.20**	**0.250**	**6.35**	**3.000**	**76.20**	**1.924**	**48.86**	**1.820**	**46.24**	**255.09**	**1134.71**	**237.00**	**41.48**	**C1937-250-3000-S**	**2.073**	**52.67**	**182.92**	**813.67**	**197.42**	**34.55**
C1937-250-3500-M	**1.937**	**49.20**	**0.250**	**6.35**	**3.500**	**88.90**	**2.205**	**56.01**	**2.076**	**52.72**	**256.37**	**1140.38**	**198.00**	**34.65**	**C1937-250-3500-S**	**2.391**	**60.73**	**182.92**	**813.67**	**164.93**	**28.86**
C1937-250-4000-M	**1.937**	**49.20**	**0.250**	**6.35**	**4.000**	**101.60**	**2.496**	**63.39**	**2.342**	**59.48**	**254.24**	**1130.93**	**169.00**	**29.58**	**C1937-250-4000-S**	**2.701**	**68.60**	**182.92**	**813.67**	**140.78**	**24.64**
C1937-250-4500-M	**1.937**	**49.20**	**0.250**	**6.35**	**4.500**	**114.30**	**2.779**	**70.59**	**2.599**	**66.02**	**254.67**	**1132.82**	**148.00**	**25.90**	**C1937-250-4500-S**	**3.016**	**76.61**	**182.92**	**813.67**	**123.28**	**21.57**
C1937-250-5000-M	**1.937**	**49.20**	**0.250**	**6.35**	**5.000**	**127.00**	**3.058**	**77.67**	**2.851**	**72.41**	**256.37**	**1140.38**	**132.00**	**23.10**	**C1937-250-5000-S**	**3.336**	**84.75**	**182.92**	**813.67**	**109.96**	**19.24**
C1937-250-5500-M	**1.937**	**49.20**	**0.250**	**6.35**	**5.500**	**139.70**	**3.339**	**84.80**	**3.105**	**78.86**	**257.22**	**1144.16**	**119.00**	**20.83**	**C1937-250-5500-S**	**3.655**	**92.83**	**182.92**	**813.67**	**99.13**	**17.35**
C1937-250-6000-M	**1.937**	**49.20**	**0.250**	**6.35**	**6.000**	**152.40**	**3.626**	**92.11**	**3.368**	**85.54**	**256.37**	**1140.38**	**108.00**	**18.90**	**C1937-250-6000-S**	**3.967**	**100.76**	**182.92**	**813.67**	**89.96**	**15.74**
C1939-162-3250-M	**1.939**	**49.25**	**0.162**	**4.12**	**3.250**	**82.55**	**1.347**	**34.22**	**1.062**	**26.98**	**79.11**	**351.90**	**41.58**	**7.28**	**C1939-162-3250-S**	**1.625**	**41.28**	**58.74**	**261.28**	**36.15**	**6.33**
C1939-162-3500-M	**1.939**	**49.25**	**0.162**	**4.12**	**3.500**	**88.90**	**1.435**	**36.44**	**1.124**	**28.54**	**79.11**	**351.90**	**38.31**	**6.70**	**C1939-162-3500-S**	**1.737**	**44.11**	**58.74**	**261.28**	**33.31**	**5.83**
C1939-162-3750-M	**1.939**	**49.25**	**0.162**	**4.12**	**3.750**	**95.25**	**1.522**	**38.66**	**1.185**	**30.11**	**79.11**	**351.90**	**35.51**	**6.21**	**C1939-162-3750-S**	**1.848**	**46.93**	**58.74**	**261.28**	**30.88**	**5.40**
C1939-162-4000-M	**1.939**	**49.25**	**0.162**	**4.12**	**4.000**	**101.60**	**1.610**	**40.88**	**1.247**	**31.68**	**79.11**	**351.90**	**33.10**	**5.79**	**C1939-162-4000-S**	**1.959**	**49.76**	**58.74**	**261.28**	**28.78**	**5.04**
C1939-162-4250-M	**1.939**	**49.25**	**0.162**	**4.12**	**4.250**	**107.95**	**1.697**	**43.10**	**1.309**	**33.24**	**79.11**	**351.90**	**30.99**	**5.42**	**C1939-162-4250-S**	**2.070**	**52.58**	**58.74**	**261.28**	**26.95**	**4.72**
C1939-162-4500-M	**1.939**	**49.25**	**0.162**	**4.12**	**4.500**	**114.30**	**1.784**	**45.32**	**1.370**	**34.81**	**79.11**	**351.90**	**29.13**	**5.10**	**C1939-162-4500-S**	**2.181**	**55.41**	**58.74**	**261.28**	**25.33**	**4.43**

FOR INFORMATION ON ALTERNATIVE FINISHES, SEE PAGE 311

Part Numbers with an "*" are squared and not ground. **Part Numbers in bold** represent the newly expanded Associated Spring RAYMOND compression spring offering.

MUSIC WIRE															STAINLESS STEEL						
Catalog #	Outside Diameter (OD)		Wire Diameter (d)		Free Length (L) Approx		Load Length (L_1)		Solid Height (Sh) Approx		Load (P) at L_1		Spring Rate (R)		Catalog #	Load Length (L_1)		Load (P) at L_1		Spring Rate (R)	
	in	mm	in	mm	in	mm	in	mm	in	mm	lb	N	lb/in	N/mm		in	mm	lb	N	lb/in	N/mm
C1939-162-4750-M	1.939	49.25	0.162	4.12	4.750	120.65	1.872	47.54	1.432	36.38	79.11	351.90	27.49	4.81	**C1939-162-4750-S**	2.293	58.23	58.74	261.28	23.90	4.18
C1939-162-5000-M	1.939	49.25	0.162	4.12	5.000	127.00	1.959	49.77	1.494	37.94	79.11	351.90	26.02	4.55	**C1939-162-5000-S**	2.404	61.05	58.74	261.28	22.62	3.96
C1939-162-5250-M	1.939	49.25	0.162	4.12	5.250	133.35	2.047	51.99	1.555	39.51	79.11	351.90	24.70	4.32	**C1939-162-5250-S**	2.515	63.88	58.74	261.28	21.48	3.76
C1939-162-5500-M	1.939	49.25	0.162	4.12	5.500	139.70	2.134	54.21	1.617	41.08	79.11	351.90	23.50	4.11	**C1939-162-5500-S**	2.626	66.70	58.74	261.28	20.44	3.58
C1939-162-5750-M	1.939	49.25	0.162	4.12	5.750	146.05	2.222	56.43	1.679	42.64	79.11	351.90	22.42	3.92	**C1939-162-5750-S**	2.737	69.53	58.74	261.28	19.50	3.41
C1939-162-6000-M	1.939	49.25	0.162	4.12	6.000	152.40	2.309	58.65	1.740	44.21	79.11	351.90	21.43	3.75	**C1939-162-6000-S**	2.848	72.35	58.74	261.28	18.64	3.26
C1939-162-6250-M	1.939	49.25	0.162	4.12	6.250	158.75	2.396	60.87	1.802	45.78	79.11	351.90	20.53	3.59	**C1939-162-6250-S**	2.960	75.18	58.74	261.28	17.85	3.12
C1939-162-6500-M	1.939	49.25	0.162	4.12	6.500	165.10	2.484	63.09	1.864	47.34	79.11	351.90	19.70	3.45	**C1939-162-6500-S**	3.071	78.00	58.74	261.28	17.13	3.00
C1939-162-6750-M	1.939	49.25	0.162	4.12	6.750	171.45	2.571	65.31	1.926	48.91	79.11	351.90	18.93	3.31	**C1939-162-6750-S**	3.182	80.82	58.74	261.28	16.46	2.88
C1939-162-7000-M	1.939	49.25	0.162	4.12	7.000	177.80	2.659	67.53	1.987	50.47	79.11	351.90	18.22	3.19	**C1939-162-7000-S**	3.293	83.65	58.74	261.28	15.85	2.77
C1939-162-7500-M	1.939	49.25	0.162	4.12	7.500	190.50	2.834	71.97	2.111	53.61	79.11	351.90	16.95	2.97	**C1939-162-7500-S**	3.516	89.30	58.74	261.28	14.74	2.58
C1939-162-8000-M	1.939	49.25	0.162	4.12	8.000	203.20	3.008	76.41	2.234	56.74	79.11	351.90	15.85	2.77	**C1939-162-8000-S**	3.738	94.94	58.74	261.28	13.78	2.41
C1939-162-8500-M	1.939	49.25	0.162	4.12	8.500	215.90	3.183	80.85	2.357	59.87	79.11	351.90	14.88	2.60	**C1939-162-8500-S**	3.960	100.59	58.74	261.28	12.94	2.26
C1939-162-9000-M	1.939	49.25	0.162	4.12	9.000	228.60	3.358	85.30	2.481	63.01	79.11	351.90	14.02	2.45	**C1939-162-9000-S**	4.183	106.24	58.74	261.28	12.19	2.13
C1939-162-9500-M	1.939	49.25	0.162	4.12	9.500	241.30	3.533	89.74	2.604	66.14	79.11	351.90	13.26	2.32	**C1939-162-9500-S**	4.405	111.89	58.74	261.28	11.53	2.02
C1939-177-3000-M	1.939	49.25	0.177	4.50	3.000	76.20	1.374	34.91	1.142	29.00	101.21	450.19	62.25	10.89	**C1939-177-3000-S**	1.628	41.35	74.28	330.42	54.13	9.47
C1939-177-3250-M	1.939	49.25	0.177	4.50	3.250	82.55	1.471	37.35	1.214	30.85	101.21	450.19	56.88	9.95	**C1939-177-3250-S**	1.748	44.40	74.28	330.42	49.46	8.66
C1939-177-3500-M	1.939	49.25	0.177	4.50	3.500	88.90	1.567	39.80	1.287	32.70	101.21	450.19	52.36	9.16	**C1939-177-3500-S**	1.868	47.46	74.28	330.42	45.53	7.97
C1939-177-3750-M	1.939	49.25	0.177	4.50	3.750	95.25	1.663	42.25	1.360	34.54	101.21	450.19	48.50	8.49	**C1939-177-3750-S**	1.989	50.52	74.28	330.42	42.18	7.38
C1939-177-4000-M	1.939	49.25	0.177	4.50	4.000	101.60	1.760	44.70	1.433	36.39	101.21	450.19	45.18	7.91	**C1939-177-4000-S**	2.109	53.57	74.28	330.42	39.29	6.87
C1939-177-4250-M	1.939	49.25	0.177	4.50	4.250	107.95	1.856	47.15	1.505	38.24	101.21	450.19	42.28	7.40	**C1939-177-4250-S**	2.230	56.63	74.28	330.42	36.76	6.43
C1939-177-4500-M	1.939	49.25	0.177	4.50	4.500	114.30	1.953	49.60	1.578	40.09	101.21	450.19	39.73	6.95	**C1939-177-4500-S**	2.350	59.69	74.28	330.42	34.55	6.05
C1939-177-4750-M	1.939	49.25	0.177	4.50	4.750	120.65	2.049	52.04	1.651	41.93	101.21	450.19	37.47	6.56	**C1939-177-4750-S**	2.470	62.74	74.28	330.42	32.58	5.70
C1939-177-5000-M	1.939	49.25	0.177	4.50	5.000	127.00	2.145	54.49	1.724	43.78	101.21	450.19	35.45	6.20	**C1939-177-5000-S**	2.591	65.80	74.28	330.42	30.83	5.40
C1939-177-5250-M	1.939	49.25	0.177	4.50	5.250	133.35	2.242	56.94	1.796	45.63	101.21	450.19	33.64	5.89	**C1939-177-5250-S**	2.711	68.86	74.28	330.42	29.26	5.12
C1939-177-5500-M	1.939	49.25	0.177	4.50	5.500	139.70	2.338	59.39	1.869	47.48	101.21	450.19	32.01	5.60	**C1939-177-5500-S**	2.831	71.91	74.28	330.42	27.83	4.87
C1939-177-5750-M	1.939	49.25	0.177	4.50	5.750	146.05	2.435	61.84	1.942	49.33	101.21	450.19	30.53	5.34	**C1939-177-5750-S**	2.952	74.97	74.28	330.42	26.54	4.65
C1939-177-6000-M	1.939	49.25	0.177	4.50	6.000	152.40	2.531	64.29	2.015	51.17	101.21	450.19	29.17	5.11	**C1939-177-6000-S**	3.072	78.03	74.28	330.42	25.37	4.44
C1939-177-6250-M	1.939	49.25	0.177	4.50	6.250	158.75	2.627	66.73	2.087	53.02	101.21	450.19	27.94	4.89	**C1939-177-6250-S**	3.192	81.09	74.28	330.42	24.29	4.25
C1939-177-6500-M	1.939	49.25	0.177	4.50	6.500	165.10	2.724	69.18	2.160	54.87	101.21	450.19	26.80	4.69	**C1939-177-6500-S**	3.313	84.14	74.28	330.42	23.31	4.08
C1939-177-6750-M	1.939	49.25	0.177	4.50	6.750	171.45	2.820	71.63	2.233	56.72	101.21	450.19	25.75	4.51	**C1939-177-6750-S**	3.433	87.20	74.28	330.42	22.39	3.92
C1939-177-7000-M	1.939	49.25	0.177	4.50	7.000	177.80	2.917	74.08	2.306	58.57	101.21	450.19	24.79	4.34	**C1939-177-7000-S**	3.553	90.26	74.28	330.42	21.55	3.77
C1939-177-7500-M*	1.939	49.25	0.177	4.50	7.500	190.50	3.218	81.74	2.586	65.67	101.21	450.19	23.64	4.14	**C1939-177-7500-S***	3.886	98.70	74.28	330.42	20.55	3.60
C1939-177-8000-M*	1.939	49.25	0.177	4.50	8.000	203.20	3.411	86.64	2.731	69.37	101.21	450.19	22.05	3.86	**C1939-177-8000-S***	4.127	104.82	74.28	330.42	19.18	3.36
C1939-177-8500-M*	1.939	49.25	0.177	4.50	8.500	215.90	3.604	91.53	2.877	73.07	101.21	450.19	20.67	3.62	**C1939-177-8500-S***	4.367	110.93	74.28	330.42	17.97	3.15
C1939-177-9000-M*	1.939	49.25	0.177	4.50	9.000	228.60	3.796	96.43	3.022	76.76	101.21	450.19	19.45	3.40	**C1939-177-9000-S***	4.608	117.04	74.28	330.42	16.91	2.96
C1939-177-9500-M*	1.939	49.25	0.177	4.50	9.500	241.30	3.989	101.33	3.168	80.46	101.21	450.19	18.37	3.21	**C1939-177-9500-S***	4.849	123.16	74.28	330.42	15.97	2.79
C1939-192-2875-M	1.939	49.25	0.192	4.88	2.875	73.03	1.436	36.47	1.241	31.52	126.85	564.27	88.15	15.43	**C1939-192-2875-S**	1.674	42.53	92.04	409.41	76.65	13.41
C1939-192-3000-M	1.939	49.25	0.192	4.88	3.000	76.20	1.489	37.81	1.283	32.59	126.85	564.27	83.94	14.69	**C1939-192-3000-S**	1.739	44.17	92.04	409.41	72.99	12.77
C1939-192-3250-M	1.939	49.25	0.192	4.88	3.250	82.55	1.594	40.50	1.367	34.73	126.85	564.27	76.62	13.41	**C1939-192-3250-S**	1.869	47.46	92.04	409.41	66.62	11.66
C1939-192-3500-M	1.939	49.25	0.192	4.88	3.500	88.90	1.700	43.18	1.451	36.86	126.85	564.27	70.47	12.33	**C1939-192-3500-S**	1.998	50.75	92.04	409.41	61.28	10.72
C1939-192-3750-M	1.939	49.25	0.192	4.88	3.750	95.25	1.805	45.86	1.535	39.00	126.85	564.27	65.24	11.42	**C1939-192-3750-S**	2.128	54.04	92.04	409.41	56.73	9.93
C1939-192-4000-M	1.939	49.25	0.192	4.88	4.000	101.60	1.911	48.54	1.620	41.14	126.85	564.27	60.73	10.63	**C1939-192-4000-S**	2.257	57.33	92.04	409.41	52.81	9.24
C1939-192-4250-M	1.939	49.25	0.192	4.88	4.250	107.95	2.017	51.22	1.704	43.27	126.85	564.27	56.80	9.94	**C1939-192-4250-S**	2.387	60.62	92.04	409.41	49.39	8.64
C1939-192-4500-M	1.939	49.25	0.192	4.88	4.500	114.30	2.122	53.90	1.788	45.41	126.85	564.27	53.35	9.34	**C1939-192-4500-S**	2.516	63.91	92.04	409.41	46.39	8.12
C1939-192-4750-M	1.939	49.25	0.192	4.88	4.750	120.65	2.228	56.59	1.872	47.54	126.85	564.27	50.29	8.80	**C1939-192-4750-S**	2.645	67.20	92.04	409.41	43.73	7.65
C1939-192-5000-M	1.939	49.25	0.192	4.88	5.000	127.00	2.333	59.27	1.956	49.68	126.85	564.27	47.57	8.32	**C1939-192-5000-S**	2.775	70.48	92.04	409.41	41.37	7.24
C1939-192-5250-M	1.939	49.25	0.192	4.88	5.250	133.35	2.439	61.95	2.040	51.82	126.85	564.27	45.13	7.90	**C1939-192-5250-S**	2.904	73.77	92.04	409.41	39.24	6.87
C1939-192-5500-M	1.939	49.25	0.192	4.88	5.500	139.70	2.545	64.63	2.124	53.95	126.85	564.27	42.92	7.51	**C1939-192-5500-S**	3.034	77.06	92.04	409.41	37.32	6.53
C1939-192-5750-M	1.939	49.25	0.192	4.88	5.750	146.05	2.650	67.31	2.208	56.09	126.85	564.27	40.92	7.16	**C1939-192-5750-S**	3.163	80.35	92.04	409.41	35.58	6.23
C1939-192-6000-M	1.939	49.25	0.192	4.88	6.000	152.40	2.756	69.99	2.292	58.22	126.85	564.27	39.10	6.84	**C1939-192-6000-S**	3.293	83.64	92.04	409.41	34.00	5.95
C1939-192-6250-M	1.939	49.25	0.192	4.88	6.250	158.75	2.861	72.68	2.376	60.36	126.85	564.27	37.43	6.55	**C1939-192-6250-S**	3.422	86.93	92.04	409.41	32.55	5.70
C1939-192-6500-M	1.939	49.25	0.192	4.88	6.500	165.10	2.967	75.36	2.460	62.50	126.85	564.27	35.90	6.28	**C1939-192-6500-S**	3.552	90.22	92.04	409.41	31.22	5.46
C1939-192-6750-M*	1.939	49.25	0.192	4.88	6.750	171.45	3.183	80.86	2.682	68.11	126.85	564.27	35.57	6.22	**C1939-192-6750-S***	3.774	95.86	92.04	409.41	30.93	5.41
C1939-192-7000-M*	1.939	49.25	0.192	4.88	7.000	177.80	3.289	83.54	2.766	70.25	126.85	564.27	34.18	5.98	**C1939-192-7000-S***	3.903	99.15	92.04	409.41	29.72	5.20
C1939-192-7500-M*	1.939	49.25	0.192	4.88	7.500	190.50	3.500	88.90	2.934	74.52	126.85	564.27	31.71	5.55	**C1939-192-7500-S***	4.162	105.73	92.04	409.41	27.58	4.83
C1939-192-8000-M*	1.939	49.25	0.192	4.88	8.000	203.20	3.711	94.26	3.102	78.79	126.85	564.27	29.58	5.18	**C1939-192-8000-S***	4.421	112.31	92.04	409.41	25.72	4.50
C1939-192-8500-M*	1.939	49.25	0.192	4.88	8.500	215.90	3.922	99.63	3.270	83.06	126.85	564.27	27.71	4.85	**C1939-192-8500-S***	4.680	118.88	92.04	409.41	24.10	4.22
C1939-192-9000-M*	1.939	49.25	0.192	4.88	9.000	228.60	4.133	104.99	3.438	87.34	126.85	564.27	26.07	4.56	**C1939-192-9000-S***	4.939	125.46	92.04	409.41	22.67	3.97
C1939-192-9500-M*	1.939	49.25	0.192	4.88	9.500	241.30	4.345	110.35	3.607	91.61	126.85	564.27	24.61	4.31	**C1939-192-9500-S***	5.198	132.04	92.04	409.41	21.40	3.74
C1939-207-2750-M	1.939	49.25	0.207	5.26	2.750	69.85	1.487	37.77	1.327	33.71	156.25	695.05	123.71	21.65	**C1939-207-2750-S**	1.708	43.38	112.08	498.57	107.57	18.82
C1939-207-2875-M	1.939	49.25	0.207	5.26	2.875	73.03	1.544	39.23	1.375	34.92	156.25	695.05	117.42	20.55	**C1939-207-2875-S**	1.777	45.14	112.08	498.57	102.11	17.87
C1939-207-3000-M	1.939	49.25	0.207	5.26	3.000	76.20	1.602	40.68	1.423	36.14	156.25	695.05	111.75	19.56	**C1939-207-3000-S**	1.847	46.90	112.08	498.57	97.17	17.01
C1939-207-3250-M	1.939	49.25	0.207	5.26	3.250	82.55	1.717	43.60	1.518	38.56	156.25	695.05	101.90	17.83	**C1939-207-3250-S**	1.985	50.42	112.08	498.57	88.61	15.51

Part Numbers with an "*" are squared and not ground. **Part Numbers in bold** represent the newly expanded Associated Spring RAYMOND compression spring offering.

MUSIC WIRE															STAINLESS STEEL					
Catalog #	Outside Diameter (OD)		Wire Diameter (d)		Free Length (L) Approx		Load Length (L_1)		Solid Height (Sh) Approx		Load (P) at L_1		Spring Rate (R)		Catalog #	Load Length (L_1)		Load (P) at L_1		Spring Rate (R)	
	in	mm	in	mm	in	mm	in	mm	in	mm	lb	N	lb/in	N/mm		in	mm	lb	N	lb/in	N/mm
C1939-207-3500-M	1.939	49.25	0.207	5.26	3.500	88.90	1.831	46.52	1.614	40.99	156.25	695.05	93.64	16.39	**C1939-207-3500-S**	2.124	53.94	112.08	498.57	81.43	14.25
C1939-207-3750-M	1.939	49.25	0.207	5.26	3.750	95.25	1.946	49.43	1.709	43.42	156.25	695.05	86.63	15.16	**C1939-207-3750-S**	2.262	57.46	112.08	498.57	75.33	13.18
C1939-207-4000-M	1.939	49.25	0.207	5.26	4.000	101.60	2.061	52.35	1.805	45.84	156.25	695.05	80.59	14.10	**C1939-207-4000-S**	2.401	60.97	112.08	498.57	70.07	12.26
C1939-207-4250-M	1.939	49.25	0.207	5.26	4.250	107.95	2.176	55.27	1.900	48.27	156.25	695.05	75.33	13.18	**C1939-207-4250-S**	2.539	64.49	112.08	498.57	65.51	11.46
C1939-207-4500-M	1.939	49.25	0.207	5.26	4.500	114.30	2.291	58.18	1.996	50.69	156.25	695.05	70.72	12.38	**C1939-207-4500-S**	2.677	68.01	112.08	498.57	61.50	10.76
C1939-207-4750-M	1.939	49.25	0.207	5.26	4.750	120.65	2.405	61.10	2.091	53.12	156.25	695.05	66.65	11.66	**C1939-207-4750-S**	2.816	71.53	112.08	498.57	57.95	10.14
C1939-207-5000-M	1.939	49.25	0.207	5.26	5.000	127.00	2.520	64.02	2.187	55.55	156.25	695.05	63.01	11.03	**C1939-207-5000-S**	2.954	75.04	112.08	498.57	54.79	9.59
C1939-207-5250-M	1.939	49.25	0.207	5.26	5.250	133.35	2.635	66.93	2.282	57.97	156.25	695.05	59.76	10.46	**C1939-207-5250-S**	3.093	78.56	112.08	498.57	51.96	9.09
C1939-207-5500-M	1.939	49.25	0.207	5.26	5.500	139.70	2.750	69.85	2.378	60.40	156.25	695.05	56.82	9.94	**C1939-207-5500-S**	3.231	82.08	112.08	498.57	49.41	8.65
C1939-207-5750-M	1.939	49.25	0.207	5.26	5.750	146.05	2.865	72.77	2.473	62.82	156.25	695.05	54.16	9.48	**C1939-207-5750-S**	3.370	85.60	112.08	498.57	47.09	8.24
C1939-207-6000-M	1.939	49.25	0.207	5.26	6.000	152.40	2.980	75.68	2.569	65.25	156.25	695.05	51.73	9.05	**C1939-207-6000-S**	3.508	89.11	112.08	498.57	44.99	7.87
C1939-207-6250-M	1.939	49.25	0.207	5.26	6.250	158.75	3.094	78.60	2.664	67.68	156.25	695.05	49.52	8.67	**C1939-207-6250-S**	3.647	92.63	112.08	498.57	43.06	7.54
C1939-207-6500-M	1.939	49.25	0.207	5.26	6.500	165.10	3.209	81.51	2.760	70.10	156.25	695.05	47.48	8.31	**C1939-207-6500-S**	3.785	96.15	112.08	498.57	41.29	7.23
C1939-207-6750-M	1.939	49.25	0.207	5.26	6.750	171.45	3.324	84.43	2.855	72.53	156.25	695.05	45.61	7.98	**C1939-207-6750-S**	3.924	99.67	112.08	498.57	39.66	6.94
C1939-207-7000-M	1.939	49.25	0.207	5.26	7.000	177.80	3.439	87.35	2.951	74.96	156.25	695.05	43.88	7.68	**C1939-207-7000-S**	4.062	103.19	112.08	498.57	38.16	6.68
C1939-207-7500-M*	1.939	49.25	0.207	5.26	7.500	190.50	3.780	96.02	3.280	83.32	156.25	695.05	42.01	7.35	**C1939-207-7500-S***	4.432	112.57	112.08	498.57	36.53	6.39
C1939-207-8000-M*	1.939	49.25	0.207	5.26	8.000	203.20	4.010	101.86	3.471	88.17	156.25	695.05	39.16	6.85	**C1939-207-8000-S***	4.709	119.60	112.08	498.57	34.05	5.96
C1939-207-8500-M*	1.939	49.25	0.207	5.26	8.500	215.90	4.240	107.69	3.662	93.02	156.25	695.05	36.68	6.42	**C1939-207-8500-S***	4.986	126.64	112.08	498.57	31.89	5.58
C1939-207-9000-M*	1.939	49.25	0.207	5.26	9.000	228.60	4.469	113.52	3.853	97.88	156.25	695.05	34.49	6.04	**C1939-207-9000-S***	5.263	133.67	112.08	498.57	29.99	5.25
C1939-207-9500-M*	1.939	49.25	0.207	5.26	9.500	241.30	4.699	119.36	4.044	102.73	156.25	695.05	32.55	5.70	**C1939-207-9500-S***	5.540	140.71	112.08	498.57	28.30	4.95
C1939-225-2625-M	1.939	49.25	0.225	5.72	2.625	66.68	1.545	39.23	1.422	36.11	196.77	875.26	182.12	31.87	**C1939-225-2625-S**	1.746	44.34	139.24	619.39	158.37	27.71
C1939-225-2750-M	1.939	49.25	0.225	5.72	2.750	69.85	1.607	40.83	1.476	37.49	196.77	875.26	172.22	30.14	**C1939-225-2750-S**	1.820	46.23	139.24	619.39	149.76	26.21
C1939-225-2875-M	1.939	49.25	0.225	5.72	2.875	73.03	1.670	42.43	1.531	38.88	196.77	875.26	163.35	28.59	**C1939-225-2875-S**	1.895	48.12	139.24	619.39	142.04	24.86
C1939-225-3000-M	1.939	49.25	0.225	5.72	3.000	76.20	1.733	44.03	1.585	40.27	196.77	875.26	155.34	27.18	**C1939-225-3000-S**	1.969	50.02	139.24	619.39	135.08	23.64
C1939-225-3250-M	1.939	49.25	0.225	5.72	3.250	82.55	1.859	47.22	1.694	43.04	196.77	875.26	141.47	24.76	**C1939-225-3250-S**	2.118	53.80	139.24	619.39	123.02	21.53
C1939-225-3500-M	1.939	49.25	0.225	5.72	3.500	88.90	1.985	50.42	1.803	45.81	196.77	875.26	129.87	22.73	**C1939-225-3500-S**	2.267	57.58	139.24	619.39	112.93	19.76
C1939-225-3750-M	1.939	49.25	0.225	5.72	3.750	95.25	2.111	53.61	1.913	48.58	196.77	875.26	120.03	21.01	**C1939-225-3750-S**	2.416	61.37	139.24	619.39	104.38	18.27
C1939-225-4000-M	1.939	49.25	0.225	5.72	4.000	101.60	2.237	56.81	2.022	51.35	196.77	875.26	111.58	19.53	**C1939-225-4000-S**	2.565	65.15	139.24	619.39	97.03	16.98
C1939-225-4250-M	1.939	49.25	0.225	5.72	4.250	107.95	2.362	60.00	2.131	54.12	196.77	875.26	104.24	18.24	**C1939-225-4250-S**	2.714	68.93	139.24	619.39	90.64	15.86
C1939-225-4500-M	1.939	49.25	0.225	5.72	4.500	114.30	2.488	63.20	2.240	56.89	196.77	875.26	97.81	17.12	**C1939-225-4500-S**	2.863	72.71	139.24	619.39	85.05	14.88
C1939-225-4750-M	1.939	49.25	0.225	5.72	4.750	120.65	2.614	66.40	2.349	59.66	196.77	875.26	92.12	16.12	**C1939-225-4750-S**	3.012	76.50	139.24	619.39	80.10	14.02
C1939-225-5000-M	1.939	49.25	0.225	5.72	5.000	127.00	2.740	69.59	2.458	62.43	196.77	875.26	87.06	15.24	**C1939-225-5000-S**	3.161	80.28	139.24	619.39	75.70	13.25
C1939-225-5250-M	1.939	49.25	0.225	5.72	5.250	133.35	2.866	72.79	2.567	65.20	196.77	875.26	82.52	14.44	**C1939-225-5250-S**	3.310	84.06	139.24	619.39	71.76	12.56
C1939-225-5500-M	1.939	49.25	0.225	5.72	5.500	139.70	2.991	75.98	2.676	67.98	196.77	875.26	78.44	13.73	**C1939-225-5500-S**	3.459	87.85	139.24	619.39	68.21	11.94
C1939-225-5750-M	1.939	49.25	0.225	5.72	5.750	146.05	3.117	79.18	2.785	70.75	196.77	875.26	74.74	13.08	**C1939-225-5750-S**	3.607	91.63	139.24	619.39	64.99	11.37
C1939-225-6000-M	1.939	49.25	0.225	5.72	6.000	152.40	3.243	82.37	2.894	73.52	196.77	875.26	71.37	12.49	**C1939-225-6000-S**	3.756	95.41	139.24	619.39	62.06	10.86
C1939-225-6250-M	1.939	49.25	0.225	5.72	6.250	158.75	3.369	85.57	3.003	76.29	196.77	875.26	68.30	11.95	**C1939-225-6250-S**	3.905	99.20	139.24	619.39	59.39	10.39
C1939-225-6500-M	1.939	49.25	0.225	5.72	6.500	165.10	3.495	88.77	3.113	79.06	196.77	875.26	65.47	11.46	**C1939-225-6500-S**	4.054	102.98	139.24	619.39	56.93	9.96
C1939-225-6750-M	1.939	49.25	0.225	5.72	6.750	171.45	3.621	91.96	3.222	81.83	196.77	875.26	62.88	11.00	**C1939-225-6750-S**	4.203	106.76	139.24	619.39	54.67	9.57
C1939-225-7000-M	1.939	49.25	0.225	5.72	7.000	177.80	3.746	95.16	3.331	84.60	196.77	875.26	60.48	10.58	**C1939-225-7000-S**	4.352	110.54	139.24	619.39	52.59	9.20
C1939-225-7500-M	1.939	49.25	0.225	5.72	7.500	190.50	3.998	101.55	3.549	90.14	196.77	875.26	56.19	9.83	**C1939-225-7500-S**	4.650	118.11	139.24	619.39	48.86	8.55
C1939-225-8000-M	1.939	49.25	0.225	5.72	8.000	203.20	4.250	107.94	3.767	95.68	196.77	875.26	52.47	9.18	**C1939-225-8000-S**	4.948	125.68	139.24	619.39	45.62	7.98
C1939-225-8500-M	1.939	49.25	0.225	5.72	8.500	215.90	4.501	114.33	3.985	101.23	196.77	875.26	49.21	8.61	**C1939-225-8500-S**	5.246	133.24	139.24	619.39	42.79	7.49
C1939-225-9000-M	1.939	49.25	0.225	5.72	9.000	228.60	4.753	120.72	4.203	106.77	196.77	875.26	46.33	8.11	**C1939-225-9000-S**	5.544	140.81	139.24	619.39	40.29	7.05
C1939-225-9500-M	1.939	49.25	0.225	5.72	9.500	241.30	5.004	127.11	4.422	112.31	196.77	875.26	43.77	7.66	**C1939-225-9500-S**	5.841	148.37	139.24	619.39	38.06	6.66
C1939-250-2625-M	1.939	49.25	0.250	6.35	2.625	66.68	1.695	43.04	1.607	40.82	263.06	1170.16	282.75	49.48	**C1939-250-2625-S**	1.882	47.80	182.75	812.90	245.87	43.03
C1939-250-2750-M	1.939	49.25	0.250	6.35	2.750	69.85	1.765	44.83	1.671	42.43	263.06	1170.16	267.04	46.73	**C1939-250-2750-S**	1.963	49.86	182.75	812.90	232.21	40.64
C1939-250-2875-M	1.939	49.25	0.250	6.35	2.875	73.03	1.835	46.61	1.734	44.05	263.06	1170.16	252.98	44.27	**C1939-250-2875-S**	2.044	51.92	182.75	812.90	219.99	38.50
C1939-250-3000-M	1.939	49.25	0.250	6.35	3.000	76.20	1.905	48.40	1.798	45.67	263.06	1170.16	240.34	42.06	**C1939-250-3000-S**	2.126	53.99	182.75	812.90	208.99	36.57
C1939-250-3250-M	1.939	49.25	0.250	6.35	3.250	82.55	2.046	51.97	1.925	48.90	263.06	1170.16	218.49	38.24	**C1939-250-3250-S**	2.288	58.12	182.75	812.90	189.99	33.25
C1939-250-3500-M	1.939	49.25	0.250	6.35	3.500	88.90	2.187	55.54	2.052	52.13	263.06	1170.16	200.28	35.05	**C1939-250-3500-S**	2.451	62.25	182.75	812.90	174.16	30.48
C1939-250-3750-M	1.939	49.25	0.250	6.35	3.750	95.25	2.327	59.11	2.180	55.37	263.06	1170.16	184.87	32.35	**C1939-250-3750-S**	2.613	66.38	182.75	812.90	160.76	28.13
C1939-250-4000-M	1.939	49.25	0.250	6.35	4.000	101.60	2.468	62.68	2.307	58.60	263.06	1170.16	171.67	30.04	**C1939-250-4000-S**	2.776	70.50	182.75	812.90	149.28	26.12
C1939-250-4250-M	1.939	49.25	0.250	6.35	4.250	107.95	2.608	66.25	2.434	61.83	263.06	1170.16	160.22	28.04	**C1939-250-4250-S**	2.938	74.63	182.75	812.90	139.33	24.38
C1939-250-4500-M	1.939	49.25	0.250	6.35	4.500	114.30	2.749	69.82	2.562	65.07	263.06	1170.16	150.21	26.29	**C1939-250-4500-S**	3.101	78.76	182.75	812.90	130.62	22.86
C1939-250-4750-M	1.939	49.25	0.250	6.35	4.750	120.65	2.889	73.39	2.689	68.30	263.06	1170.16	141.37	24.74	**C1939-250-4750-S**	3.263	82.89	182.75	812.90	122.93	21.51
C1939-250-5000-M	1.939	49.25	0.250	6.35	5.000	127.00	3.030	76.96	2.816	71.53	263.06	1170.16	133.52	23.37	**C1939-250-5000-S**	3.426	87.02	182.75	812.90	116.10	20.32
C1939-250-5250-M	1.939	49.25	0.250	6.35	5.250	133.35	3.170	80.53	2.943	74.76	263.06	1170.16	126.49	22.14	**C1939-250-5250-S**	3.589	91.15	182.75	812.90	109.99	19.25
C1939-250-5500-M	1.939	49.25	0.250	6.35	5.500	139.70	3.311	84.10	3.071	78.00	263.06	1170.16	120.17	21.03	**C1939-250-5500-S**	3.751	95.28	182.75	812.90	104.49	18.29
C1939-250-5750-M	1.939	49.25	0.250	6.35	5.750	146.05	3.451	87.67	3.198	81.23	263.06	1170.16	114.45	20.03	**C1939-250-5750-S**	3.914	99.41	182.75	812.90	99.52	17.42
C1939-250-6000-M	1.939	49.25	0.250	6.35	6.000	152.40	3.592	91.24	3.325	84.46	263.06	1170.16	109.24	19.12	**C1939-250-6000-S**	4.076	103.54	182.75	812.90	94.99	16.62
C1939-250-6250-M	1.939	49.25	0.250	6.35	6.250	158.75	3.733	94.81	3.453	87.70	263.06	1170.16	104.49	18.29	**C1939-250-6250-S**	4.239	107.67	182.75	812.90	90.86	15.90
C1939-250-6500-M	1.939	49.25	0.250	6.35	6.500	165.10	3.873	98.38	3.580	90.93	263.06	1170.16	100.14	17.52	**C1939-250-6500-S**	4.401	111.79	182.75	812.90	87.08	15.24
C1939-250-6750-M	1.939	49.25	0.250	6.35	6.750	171.45	4.014	101.95	3.707	94.16	263.06	1170.16	96.13	16.82	**C1939-250-6750-S**	4.564	115.92	182.75	812.90	83.60	14.63

FOR INFORMATION ON ALTERNATIVE FINISHES, SEE PAGE 311

Part Numbers with an "*" are squared and not ground. **Part Numbers in bold** represent the newly expanded Associated Spring RAYMOND compression spring offering.

MUSIC WIRE															STAINLESS STEEL						
Catalog #	Outside Diameter (OD)		Wire Diameter (d)		Free Length (L) Approx		Load Length (L_1)		Solid Height (Sh) Approx		Load (P) at L_1		Spring Rate (R)		Catalog #	Load Length (L_1)		Load (P) at L_1		Spring Rate (R)	
	in	mm	in	mm	in	mm	in	mm	in	mm	lb	N	lb/in	N/mm		in	mm	lb	N	lb/in	N/mm
C1939-250-7000-M	1.939	49.25	0.250	6.35	7.000	177.80	4.154	105.52	3.835	97.40	263.06	1170.16	92.44	16.18	**C1939-250-7000-S**	4.726	120.05	182.75	812.90	80.38	14.07
C1939-250-7500-M	1.939	49.25	0.250	6.35	7.500	190.50	4.435	112.65	4.089	103.86	263.06	1170.16	85.83	15.02	**C1939-250-7500-S**	5.052	128.31	182.75	812.90	74.64	13.06
C1939-250-8000-M	1.939	49.25	0.250	6.35	8.000	203.20	4.716	119.79	4.344	110.33	263.06	1170.16	80.11	14.02	**C1939-250-8000-S**	5.377	136.57	182.75	812.90	69.66	12.19
C1939-250-8500-M	1.939	49.25	0.250	6.35	8.500	215.90	4.997	126.93	4.598	116.80	263.06	1170.16	75.11	13.14	**C1939-250-8500-S**	5.702	144.83	182.75	812.90	65.31	11.43
C1939-250-9000-M	1.939	49.25	0.250	6.35	9.000	228.60	5.278	134.07	4.853	123.26	263.06	1170.16	70.69	12.37	**C1939-250-9000-S**	6.027	153.08	182.75	812.90	61.47	10.76
C1939-250-9500-M	1.939	49.25	0.250	6.35	9.500	241.30	5.560	141.21	5.107	129.73	263.06	1170.16	66.76	11.68	**C1939-250-9500-S**	6.352	161.34	182.75	812.90	58.05	10.16
C1998-162-3250-M	1.998	50.75	0.162	4.12	3.250	82.55	1.317	33.45	1.025	26.02	76.87	341.94	39.77	6.96	**C1998-162-3250-S**	1.599	40.63	57.07	253.88	34.58	6.05
C1998-162-3500-M	1.998	50.75	0.162	4.12	3.500	88.90	1.402	35.60	1.083	27.51	76.87	341.94	36.64	6.41	**C1998-162-3500-S**	1.708	43.39	57.07	253.88	31.86	5.57
C1998-162-3750-M	1.998	50.75	0.162	4.12	3.750	95.25	1.487	37.76	1.141	28.99	76.87	341.94	33.96	5.94	**C1998-162-3750-S**	1.817	46.16	57.07	253.88	29.53	5.17
C1998-162-4000-M	1.998	50.75	0.162	4.12	4.000	101.60	1.571	39.91	1.200	30.48	76.87	341.94	31.65	5.54	**C1998-162-4000-S**	1.926	48.93	57.07	253.88	27.52	4.82
C1998-162-4250-M	1.998	50.75	0.162	4.12	4.250	107.95	1.656	42.07	1.258	31.96	76.87	341.94	29.64	5.19	**C1998-162-4250-S**	2.035	51.70	57.07	253.88	25.77	4.51
C1998-162-4500-M	1.998	50.75	0.162	4.12	4.500	114.30	1.741	44.22	1.317	33.45	76.87	341.94	27.86	4.88	**C1998-162-4500-S**	2.144	54.46	57.07	253.88	24.23	4.24
C1998-162-4750-M	1.998	50.75	0.162	4.12	4.750	120.65	1.826	46.38	1.375	34.93	76.87	341.94	26.29	4.60	**C1998-162-4750-S**	2.253	57.23	57.07	253.88	22.86	4.00
C1998-162-5000-M	1.998	50.75	0.162	4.12	5.000	127.00	1.911	48.53	1.434	36.42	76.87	341.94	24.88	4.35	**C1998-162-5000-S**	2.362	60.00	57.07	253.88	21.64	3.79
C1998-162-5250-M	1.998	50.75	0.162	4.12	5.250	133.35	1.996	50.69	1.492	37.90	76.87	341.94	23.62	4.13	**C1998-162-5250-S**	2.471	62.77	57.07	253.88	20.54	3.59
C1998-162-5500-M	1.998	50.75	0.162	4.12	5.500	139.70	2.080	52.84	1.551	39.39	76.87	341.94	22.48	3.93	**C1998-162-5500-S**	2.580	65.54	57.07	253.88	19.55	3.42
C1998-162-5750-M	1.998	50.75	0.162	4.12	5.750	146.05	2.165	55.00	1.609	40.87	76.87	341.94	21.44	3.75	**C1998-162-5750-S**	2.689	68.30	57.07	253.88	18.65	3.26
C1998-162-6000-M	1.998	50.75	0.162	4.12	6.000	152.40	2.250	57.15	1.668	42.36	76.87	341.94	20.50	3.59	**C1998-162-6000-S**	2.798	71.07	57.07	253.88	17.83	3.12
C1998-162-6250-M	1.998	50.75	0.162	4.12	6.250	158.75	2.335	59.30	1.726	43.84	76.87	341.94	19.63	3.44	**C1998-162-6250-S**	2.907	73.84	57.07	253.88	17.07	2.99
C1998-162-6500-M	1.998	50.75	0.162	4.12	6.500	165.10	2.420	61.46	1.785	45.33	76.87	341.94	18.84	3.30	**C1998-162-6500-S**	3.016	76.61	57.07	253.88	16.38	2.87
C1998-162-6750-M	1.998	50.75	0.162	4.12	6.750	171.45	2.504	63.61	1.843	46.81	76.87	341.94	18.11	3.17	**C1998-162-6750-S**	3.125	79.38	57.07	253.88	15.75	2.76
C1998-162-7000-M	1.998	50.75	0.162	4.12	7.000	177.80	2.589	65.77	1.902	48.30	76.87	341.94	17.43	3.05	**C1998-162-7000-S**	3.234	82.14	57.07	253.88	15.16	2.65
C1998-162-7500-M	1.998	50.75	0.162	4.12	7.500	190.50	2.759	70.08	2.018	51.27	76.87	341.94	16.21	2.84	**C1998-162-7500-S**	3.452	87.68	57.07	253.88	14.10	2.47
C1998-162-8000-M	1.998	50.75	0.162	4.12	8.000	203.20	2.929	74.39	2.135	54.24	76.87	341.94	15.16	2.65	**C1998-162-8000-S**	3.670	93.22	57.07	253.88	13.18	2.31
C1998-162-8500-M	1.998	50.75	0.162	4.12	8.500	215.90	3.098	78.70	2.252	57.21	76.87	341.94	14.23	2.49	**C1998-162-8500-S**	3.888	98.75	57.07	253.88	12.38	2.17
C1998-162-9000-M	1.998	50.75	0.162	4.12	9.000	228.60	3.268	83.01	2.369	60.18	76.87	341.94	13.41	2.35	**C1998-162-9000-S**	4.106	104.29	57.07	253.88	11.66	2.04
C1998-162-9500-M	1.998	50.75	0.162	4.12	9.500	241.30	3.438	87.32	2.486	63.15	76.87	341.94	12.68	2.22	**C1998-162-9500-S**	4.324	109.82	57.07	253.88	11.03	1.93
C1998-177-3250-M	1.998	50.75	0.177	4.50	3.250	82.55	1.437	36.49	1.172	29.78	98.36	437.52	54.24	9.49	**C1998-177-3250-S**	1.719	43.67	72.19	321.12	47.16	8.25
C1998-177-3500-M	1.998	50.75	0.177	4.50	3.500	88.90	1.530	38.86	1.241	31.53	98.36	437.52	49.93	8.74	**C1998-177-3500-S**	1.837	46.67	72.19	321.12	43.42	7.60
C1998-177-3750-M	1.998	50.75	0.177	4.50	3.750	95.25	1.623	41.24	1.311	33.29	98.36	437.52	46.25	8.09	**C1998-177-3750-S**	1.955	49.66	72.19	321.12	40.22	7.04
C1998-177-4000-M	1.998	50.75	0.177	4.50	4.000	101.60	1.717	43.61	1.380	35.04	98.36	437.52	43.08	7.54	**C1998-177-4000-S**	2.073	52.65	72.19	321.12	37.46	6.56
C1998-177-4250-M	1.998	50.75	0.177	4.50	4.250	107.95	1.810	45.98	1.449	36.80	98.36	437.52	40.32	7.06	**C1998-177-4250-S**	2.191	55.65	72.19	321.12	35.06	6.14
C1998-177-4500-M	1.998	50.75	0.177	4.50	4.500	114.30	1.904	48.36	1.518	38.55	98.36	437.52	37.89	6.63	**C1998-177-4500-S**	2.309	58.64	72.19	321.12	32.94	5.77
C1998-177-4750-M	1.998	50.75	0.177	4.50	4.750	120.65	1.997	50.73	1.587	40.31	98.36	437.52	35.73	6.25	**C1998-177-4750-S**	2.427	61.63	72.19	321.12	31.07	5.44
C1998-177-5000-M	1.998	50.75	0.177	4.50	5.000	127.00	2.091	53.10	1.656	42.07	98.36	437.52	33.81	5.92	**C1998-177-5000-S**	2.544	64.63	72.19	321.12	29.40	5.14
C1998-177-5250-M	1.998	50.75	0.177	4.50	5.250	133.35	2.184	55.48	1.725	43.82	98.36	437.52	32.08	5.61	**C1998-177-5250-S**	2.662	67.62	72.19	321.12	27.90	4.88
C1998-177-5500-M	1.998	50.75	0.177	4.50	5.500	139.70	2.278	57.85	1.794	45.58	98.36	437.52	30.52	5.34	**C1998-177-5500-S**	2.780	70.62	72.19	321.12	26.54	4.64
C1998-177-5750-M	1.998	50.75	0.177	4.50	5.750	146.05	2.371	60.22	1.863	47.33	98.36	437.52	29.11	5.09	**C1998-177-5750-S**	2.898	73.61	72.19	321.12	25.31	4.43
C1998-177-6000-M	1.998	50.75	0.177	4.50	6.000	152.40	2.464	62.60	1.933	49.09	98.36	437.52	27.82	4.87	**C1998-177-6000-S**	3.016	76.60	72.19	321.12	24.19	4.23
C1998-177-6250-M	1.998	50.75	0.177	4.50	6.250	158.75	2.558	64.97	2.002	50.84	98.36	437.52	26.64	4.66	**C1998-177-6250-S**	3.134	79.60	72.19	321.12	23.17	4.05
C1998-177-6500-M	1.998	50.75	0.177	4.50	6.500	165.10	2.651	67.35	2.071	52.60	98.36	437.52	25.56	4.47	**C1998-177-6500-S**	3.252	82.59	72.19	321.12	22.22	3.89
C1998-177-6750-M	1.998	50.75	0.177	4.50	6.750	171.45	2.745	69.72	2.140	54.35	98.36	437.52	24.56	4.30	**C1998-177-6750-S**	3.369	85.58	72.19	321.12	21.36	3.74
C1998-177-7000-M	1.998	50.75	0.177	4.50	7.000	177.80	2.838	72.09	2.209	56.11	98.36	437.52	23.63	4.14	**C1998-177-7000-S**	3.487	88.58	72.19	321.12	20.55	3.60
C1998-177-7500-M	1.998	50.75	0.177	4.50	7.500	190.50	3.025	76.84	2.347	59.62	98.36	437.52	21.98	3.85	**C1998-177-7500-S**	3.723	94.57	72.19	321.12	19.11	3.34
C1998-177-8000-M*	1.998	50.75	0.177	4.50	8.000	203.20	3.323	84.40	2.622	66.61	98.36	437.52	21.03	3.68	**C1998-177-8000-S***	4.052	102.93	72.19	321.12	18.29	3.20
C1998-177-8500-M*	1.998	50.75	0.177	4.50	8.500	215.90	3.510	89.15	2.761	70.12	98.36	437.52	19.71	3.45	**C1998-177-8500-S***	4.288	108.92	72.19	321.12	17.14	3.00
C1998-177-9000-M*	1.998	50.75	0.177	4.50	9.000	228.60	3.697	93.90	2.899	73.63	98.36	437.52	18.55	3.25	**C1998-177-9000-S***	4.524	114.91	72.19	321.12	16.13	2.82
C1998-177-9500-M*	1.998	50.75	0.177	4.50	9.500	241.30	3.884	98.64	3.037	77.14	98.36	437.52	17.51	3.06	**C1998-177-9500-S***	4.760	120.89	72.19	321.12	15.23	2.66
C1998-192-3000-M	1.998	50.75	0.192	4.88	3.000	76.20	1.455	36.95	1.241	31.52	123.30	548.48	79.79	13.96	**C1998-192-3000-S**	1.711	43.45	89.46	397.95	69.38	12.14
C1998-192-3250-M	1.998	50.75	0.192	4.88	3.250	82.55	1.557	39.55	1.321	33.56	123.30	548.48	72.83	12.75	**C1998-192-3250-S**	1.837	46.67	89.46	397.95	63.33	11.08
C1998-192-3500-M	1.998	50.75	0.192	4.88	3.500	88.90	1.659	42.15	1.401	35.59	123.30	548.48	66.99	11.72	**C1998-192-3500-S**	1.964	49.89	89.46	397.95	58.25	10.19
C1998-192-3750-M	1.998	50.75	0.192	4.88	3.750	95.25	1.762	44.75	1.481	37.63	123.30	548.48	62.01	10.85	**C1998-192-3750-S**	2.091	53.11	89.46	397.95	53.92	9.44
C1998-192-4000-M	1.998	50.75	0.192	4.88	4.000	101.60	1.864	47.35	1.561	39.66	123.30	548.48	57.73	10.10	**C1998-192-4000-S**	2.218	56.33	89.46	397.95	50.20	8.78
C1998-192-4250-M	1.998	50.75	0.192	4.88	4.250	107.95	1.966	49.94	1.641	41.69	123.30	548.48	53.99	9.45	**C1998-192-4250-S**	2.345	59.55	89.46	397.95	46.95	8.22
C1998-192-4500-M	1.998	50.75	0.192	4.88	4.500	114.30	2.069	52.54	1.722	43.73	123.30	548.48	50.71	8.87	**C1998-192-4500-S**	2.471	62.77	89.46	397.95	44.10	7.72
C1998-192-4750-M	1.998	50.75	0.192	4.88	4.750	120.65	2.171	55.14	1.802	45.76	123.30	548.48	47.81	8.37	**C1998-192-4750-S**	2.598	65.99	89.46	397.95	41.57	7.28
C1998-192-5000-M	1.998	50.75	0.192	4.88	5.000	127.00	2.273	57.74	1.882	47.79	123.30	548.48	45.22	7.91	**C1998-192-5000-S**	2.725	69.21	89.46	397.95	39.32	6.88
C1998-192-5250-M	1.998	50.75	0.192	4.88	5.250	133.35	2.376	60.34	1.962	49.83	123.30	548.48	42.90	7.51	**C1998-192-5250-S**	2.852	72.43	89.46	397.95	37.30	6.53
C1998-192-5500-M	1.998	50.75	0.192	4.88	5.500	139.70	2.478	62.94	2.042	51.86	123.30	548.48	40.80	7.14	**C1998-192-5500-S**	2.978	75.65	89.46	397.95	35.48	6.21
C1998-192-5750-M	1.998	50.75	0.192	4.88	5.750	146.05	2.580	65.54	2.122	53.90	123.30	548.48	38.90	6.81	**C1998-192-5750-S**	3.105	78.87	89.46	397.95	33.83	5.92
C1998-192-6000-M	1.998	50.75	0.192	4.88	6.000	152.40	2.683	68.14	2.202	55.93	123.30	548.48	37.17	6.50	**C1998-192-6000-S**	3.232	82.09	89.46	397.95	32.32	5.66
C1998-192-6250-M	1.998	50.75	0.192	4.88	6.250	158.75	2.785	70.74	2.282	57.96	123.30	548.48	35.58	6.23	**C1998-192-6250-S**	3.359	85.31	89.46	397.95	30.94	5.42
C1998-192-6500-M	1.998	50.75	0.192	4.88	6.500	165.10	2.887	73.34	2.362	60.00	123.30	548.48	34.13	5.97	**C1998-192-6500-S**	3.486	88.53	89.46	397.95	29.68	5.19
C1998-192-6750-M*	1.998	50.75	0.192	4.88	6.750	171.45	3.103	78.81	2.582	65.59	123.30	548.48	33.81	5.92	**C1998-192-6750-S***	3.707	94.16	89.46	397.95	29.40	5.14

Part Numbers with an "*" are squared and not ground. **Part Numbers in bold** represent the newly expanded Associated Spring RAYMOND compression spring offering.

MUSIC WIRE														
Catalog #	Outside Diameter (OD)		Wire Diameter (d)		Free Length (L) Approx		Load Length (L_1)		Solid Height (Sh) Approx		Load (P) at L_1		Spring Rate (R)	
	in	mm	in	mm	in	mm	in	mm	in	mm	lb	N	lb/in	N/mm
C1998-192-7000-M*	1.998	50.75	0.192	4.88	7.000	177.80	3.205	81.41	2.662	67.62	123.30	548.48	32.49	5.69
C1998-192-7500-M*	1.998	50.75	0.192	4.88	7.500	190.50	3.410	86.61	2.823	71.69	123.30	548.48	30.15	5.28
C1998-192-8000-M*	1.998	50.75	0.192	4.88	8.000	203.20	3.615	91.81	2.983	75.76	123.30	548.48	28.12	4.92
C1998-192-8500-M*	1.998	50.75	0.192	4.88	8.500	215.90	3.819	97.01	3.143	79.83	123.30	548.48	26.34	4.61
C1998-192-9000-M*	1.998	50.75	0.192	4.88	9.000	228.60	4.024	102.21	3.303	83.90	123.30	548.48	24.78	4.34
C1998-192-9500-M*	1.998	50.75	0.192	4.88	9.500	241.30	4.228	107.40	3.463	87.96	123.30	548.48	23.39	4.09
C1998-207-2875-M	1.998	50.75	0.207	5.26	2.875	73.03	1.510	38.35	1.332	33.84	151.91	675.73	111.26	19.47
C1998-207-3000-M	1.998	50.75	0.207	5.26	3.000	76.20	1.565	39.76	1.378	34.99	151.91	675.73	105.88	18.53
C1998-207-3250-M	1.998	50.75	0.207	5.26	3.250	82.55	1.677	42.59	1.469	37.31	151.91	675.73	96.55	16.90
C1998-207-3500-M	1.998	50.75	0.207	5.26	3.500	88.90	1.788	45.41	1.560	39.63	151.91	675.73	88.73	15.53
C1998-207-3750-M	1.998	50.75	0.207	5.26	3.750	95.25	1.899	48.24	1.651	41.94	151.91	675.73	82.08	14.36
C1998-207-4000-M	1.998	50.75	0.207	5.26	4.000	101.60	2.011	51.07	1.742	44.26	151.91	675.73	76.36	13.36
C1998-207-4250-M	1.998	50.75	0.207	5.26	4.250	107.95	2.122	53.89	1.834	46.57	151.91	675.73	71.38	12.49
C1998-207-4500-M	1.998	50.75	0.207	5.26	4.500	114.30	2.233	56.72	1.925	48.89	151.91	675.73	67.01	11.73
C1998-207-4750-M	1.998	50.75	0.207	5.26	4.750	120.65	2.344	59.55	2.016	51.20	151.91	675.73	63.15	11.05
C1998-207-5000-M	1.998	50.75	0.207	5.26	5.000	127.00	2.456	62.38	2.107	53.52	151.91	675.73	59.71	10.45
C1998-207-5250-M	1.998	50.75	0.207	5.26	5.250	133.35	2.567	65.20	2.198	55.84	151.91	675.73	56.62	9.91
C1998-207-5500-M	1.998	50.75	0.207	5.26	5.500	139.70	2.678	68.03	2.289	58.15	151.91	675.73	53.84	9.42
C1998-207-5750-M	1.998	50.75	0.207	5.26	5.750	146.05	2.790	70.86	2.381	60.47	151.91	675.73	51.32	8.98
C1998-207-6000-M	1.998	50.75	0.207	5.26	6.000	152.40	2.901	73.68	2.472	62.78	151.91	675.73	49.02	8.58
C1998-207-6250-M	1.998	50.75	0.207	5.26	6.250	158.75	3.012	76.51	2.563	65.10	151.91	675.73	46.92	8.21
C1998-207-6500-M	1.998	50.75	0.207	5.26	6.500	165.10	3.124	79.34	2.654	67.41	151.91	675.73	44.99	7.87
C1998-207-6750-M	1.998	50.75	0.207	5.26	6.750	171.45	3.235	82.17	2.745	69.73	151.91	675.73	43.22	7.56
C1998-207-7000-M*	1.998	50.75	0.207	5.26	7.000	177.80	3.461	87.91	2.978	75.65	151.91	675.73	42.92	7.51
C1998-207-7500-M*	1.998	50.75	0.207	5.26	7.500	190.50	3.684	93.56	3.161	80.28	151.91	675.73	39.81	6.97
C1998-207-8000-M*	1.998	50.75	0.207	5.26	8.000	203.20	3.906	99.22	3.343	84.91	151.91	675.73	37.11	6.49
C1998-207-8500-M*	1.998	50.75	0.207	5.26	8.500	215.90	4.129	104.87	3.525	89.54	151.91	675.73	34.75	6.08
C1998-207-9000-M*	1.998	50.75	0.207	5.26	9.000	228.60	4.351	110.53	3.708	94.17	151.91	675.73	32.68	5.72
C1998-207-9500-M*	1.998	50.75	0.207	5.26	9.500	241.30	4.574	116.18	3.890	98.81	151.91	675.73	30.84	5.40
C1998-225-2750-M	1.998	50.75	0.225	5.72	2.750	69.85	1.573	39.95	1.433	36.41	191.34	851.13	162.54	28.44
C1998-225-2875-M	1.998	50.75	0.225	5.72	2.875	73.03	1.634	41.50	1.486	37.73	191.34	851.13	154.16	26.98
C1998-225-3000-M	1.998	50.75	0.225	5.72	3.000	76.20	1.695	43.05	1.538	39.06	191.34	851.13	146.60	25.66
C1998-225-3250-M	1.998	50.75	0.225	5.72	3.250	82.55	1.817	46.15	1.642	41.71	191.34	851.13	133.51	23.36
C1998-225-3500-M	1.998	50.75	0.225	5.72	3.500	88.90	1.939	49.25	1.747	44.36	191.34	851.13	122.57	21.45
C1998-225-3750-M	1.998	50.75	0.225	5.72	3.750	95.25	2.061	52.35	1.851	47.02	191.34	851.13	113.28	19.82
C1998-225-4000-M	1.998	50.75	0.225	5.72	4.000	101.60	2.183	55.45	1.955	49.67	191.34	851.13	105.31	18.43
C1998-225-4250-M	1.998	50.75	0.225	5.72	4.250	107.95	2.305	58.55	2.060	52.32	191.34	851.13	98.38	17.22
C1998-225-4500-M	1.998	50.75	0.225	5.72	4.500	114.30	2.427	61.65	2.164	54.97	191.34	851.13	92.31	16.15
C1998-225-4750-M	1.998	50.75	0.225	5.72	4.750	120.65	2.549	64.75	2.269	57.63	191.34	851.13	86.94	15.21
C1998-225-5000-M	1.998	50.75	0.225	5.72	5.000	127.00	2.671	67.85	2.373	60.28	191.34	851.13	82.16	14.38
C1998-225-5250-M	1.998	50.75	0.225	5.72	5.250	133.35	2.793	70.95	2.478	62.93	191.34	851.13	77.88	13.63
C1998-225-5500-M	1.998	50.75	0.225	5.72	5.500	139.70	2.915	74.05	2.582	65.58	191.34	851.13	74.03	12.95
C1998-225-5750-M	1.998	50.75	0.225	5.72	5.750	146.05	3.037	77.15	2.686	68.24	191.34	851.13	70.54	12.34
C1998-225-6000-M	1.998	50.75	0.225	5.72	6.000	152.40	3.159	80.25	2.791	70.89	191.34	851.13	67.36	11.79
C1998-225-6250-M	1.998	50.75	0.225	5.72	6.250	158.75	3.281	83.35	2.895	73.54	191.34	851.13	64.46	11.28
C1998-225-6500-M	1.998	50.75	0.225	5.72	6.500	165.10	3.403	86.45	3.000	76.19	191.34	851.13	61.79	10.81
C1998-225-6750-M	1.998	50.75	0.225	5.72	6.750	171.45	3.525	89.55	3.104	78.85	191.34	851.13	59.34	10.38
C1998-225-7000-M	1.998	50.75	0.225	5.72	7.000	177.80	3.647	92.65	3.209	81.50	191.34	851.13	57.07	9.99
C1998-225-7500-M	1.998	50.75	0.225	5.72	7.500	190.50	3.892	98.85	3.418	86.81	191.34	851.13	53.03	9.28
C1998-225-8000-M	1.998	50.75	0.225	5.72	8.000	203.20	4.136	105.05	3.626	92.11	191.34	851.13	49.52	8.67
C1998-225-8500-M*	1.998	50.75	0.225	5.72	8.500	215.90	4.495	114.17	3.978	101.03	191.34	851.13	47.78	8.36
C1998-225-9000-M*	1.998	50.75	0.225	5.72	9.000	228.60	4.739	120.37	4.186	106.33	191.34	851.13	44.91	7.86
C1998-225-9500-M*	1.998	50.75	0.225	5.72	9.500	241.30	4.983	126.57	4.395	111.64	191.34	851.13	42.36	7.41
C1998-250-2750-M	1.998	50.75	0.250	6.35	2.750	69.85	1.729	43.91	1.626	41.30	255.90	1138.31	250.62	43.86
C1998-250-2875-M	1.998	50.75	0.250	6.35	2.875	73.03	1.797	45.65	1.687	42.86	255.90	1138.31	237.43	41.55
C1998-250-3000-M	1.998	50.75	0.250	6.35	3.000	76.20	1.865	47.38	1.749	44.41	255.90	1138.31	225.56	39.47
C1998-250-3250-M	1.998	50.75	0.250	6.35	3.250	82.55	2.002	50.85	1.871	47.52	255.90	1138.31	205.05	35.88
C1998-250-3500-M	1.998	50.75	0.250	6.35	3.500	88.90	2.139	54.32	1.993	50.63	255.90	1138.31	187.97	32.89
C1998-250-3750-M	1.998	50.75	0.250	6.35	3.750	95.25	2.275	57.79	2.116	53.74	255.90	1138.31	173.51	30.36
C1998-250-4000-M	1.998	50.75	0.250	6.35	4.000	101.60	2.412	61.26	2.238	56.84	255.90	1138.31	161.11	28.19
C1998-250-4250-M	1.998	50.75	0.250	6.35	4.250	107.95	2.548	64.72	2.360	59.95	255.90	1138.31	150.37	26.32
C1998-250-4500-M	1.998	50.75	0.250	6.35	4.500	114.30	2.685	68.19	2.483	63.06	255.90	1138.31	140.97	24.67
C1998-250-4750-M	1.998	50.75	0.250	6.35	4.750	120.65	2.821	71.66	2.605	66.17	255.90	1138.31	132.68	23.22
C1998-250-5000-M	1.998	50.75	0.250	6.35	5.000	127.00	2.958	75.13	2.727	69.27	255.90	1138.31	125.31	21.93

STAINLESS STEEL						
Catalog #	Load Length (L_1)		Load (P) at L_1		Spring Rate (R)	
	in	mm	lb	N	lb/in	N/mm
C1998-192-7000-S*	3.834	97.38	89.46	397.95	28.26	4.94
C1998-192-7500-S*	4.087	103.82	89.46	397.95	26.22	4.59
C1998-192-8000-S*	4.341	110.26	89.46	397.95	24.45	4.28
C1998-192-8500-S*	4.594	116.70	89.46	397.95	22.91	4.01
C1998-192-9000-S*	4.848	123.14	89.46	397.95	21.55	3.77
C1998-192-9500-S*	5.102	129.58	89.46	397.95	20.34	3.56
C1998-207-2875-S	1.749	44.42	108.97	484.71	96.75	16.93
C1998-207-3000-S	1.817	46.14	108.97	484.71	92.07	16.11
C1998-207-3250-S	1.952	49.58	108.97	484.71	83.96	14.69
C1998-207-3500-S	2.088	53.03	108.97	484.71	77.16	13.50
C1998-207-3750-S	2.223	56.47	108.97	484.71	71.37	12.49
C1998-207-4000-S	2.359	59.92	108.97	484.71	66.40	11.62
C1998-207-4250-S	2.494	63.36	108.97	484.71	62.07	10.86
C1998-207-4500-S	2.630	66.80	108.97	484.71	58.27	10.20
C1998-207-4750-S	2.766	70.25	108.97	484.71	54.91	9.61
C1998-207-5000-S	2.901	73.69	108.97	484.71	51.92	9.09
C1998-207-5250-S	3.037	77.13	108.97	484.71	49.24	8.62
C1998-207-5500-S	3.172	80.58	108.97	484.71	46.82	8.19
C1998-207-5750-S	3.308	84.02	108.97	484.71	44.62	7.81
C1998-207-6000-S	3.444	87.47	108.97	484.71	42.62	7.46
C1998-207-6250-S	3.579	90.91	108.97	484.71	40.80	7.14
C1998-207-6500-S	3.715	94.35	108.97	484.71	39.12	6.85
C1998-207-6750-S	3.850	97.80	108.97	484.71	37.58	6.58
C1998-207-7000-S*	4.081	103.65	108.97	484.71	37.33	6.53
C1998-207-7500-S*	4.352	110.54	108.97	484.71	34.61	6.06
C1998-207-8000-S*	4.623	117.42	108.97	484.71	32.27	5.65
C1998-207-8500-S*	4.894	124.31	108.97	484.71	30.22	5.29
C1998-207-9000-S*	5.165	131.20	108.97	484.71	28.42	4.97
C1998-207-9500-S*	5.437	138.09	108.97	484.71	26.82	4.69
C1998-225-2750-S	1.792	45.52	135.40	602.31	141.34	24.73
C1998-225-2875-S	1.865	47.37	135.40	602.31	134.05	23.46
C1998-225-3000-S	1.938	49.22	135.40	602.31	127.48	22.31
C1998-225-3250-S	2.084	52.93	135.40	602.31	116.10	20.32
C1998-225-3500-S	2.230	56.63	135.40	602.31	106.58	18.65
C1998-225-3750-S	2.375	60.34	135.40	602.31	98.51	17.24
C1998-225-4000-S	2.521	64.04	135.40	602.31	91.57	16.02
C1998-225-4250-S	2.667	67.75	135.40	602.31	85.55	14.97
C1998-225-4500-S	2.813	71.45	135.40	602.31	80.27	14.05
C1998-225-4750-S	2.959	75.16	135.40	602.31	75.60	13.23
C1998-225-5000-S	3.105	78.86	135.40	602.31	71.45	12.50
C1998-225-5250-S	3.251	82.57	135.40	602.31	67.72	11.85
C1998-225-5500-S	3.397	86.27	135.40	602.31	64.37	11.26
C1998-225-5750-S	3.542	89.98	135.40	602.31	61.34	10.73
C1998-225-6000-S	3.688	93.68	135.40	602.31	58.57	10.25
C1998-225-6250-S	3.834	97.39	135.40	602.31	56.05	9.81
C1998-225-6500-S	3.980	101.09	135.40	602.31	53.73	9.40
C1998-225-6750-S	4.126	104.80	135.40	602.31	51.60	9.03
C1998-225-7000-S	4.272	108.50	135.40	602.31	49.63	8.69
C1998-225-7500-S	4.563	115.91	135.40	602.31	46.11	8.07
C1998-225-8000-S	4.855	123.32	135.40	602.31	43.06	7.53
C1998-225-8500-S*	5.241	133.11	135.40	602.31	41.54	7.27
C1998-225-9000-S*	5.532	140.52	135.40	602.31	39.05	6.83
C1998-225-9500-S*	5.824	147.93	135.40	602.31	36.84	6.45
C1998-250-2750-S	1.934	49.13	177.77	790.77	217.93	38.14
C1998-250-2875-S	2.014	51.15	177.77	790.77	206.46	36.13
C1998-250-3000-S	2.094	53.18	177.77	790.77	196.14	34.32
C1998-250-3250-S	2.253	57.23	177.77	790.77	178.31	31.20
C1998-250-3500-S	2.412	61.27	177.77	790.77	163.45	28.60
C1998-250-3750-S	2.572	65.32	177.77	790.77	150.88	26.40
C1998-250-4000-S	2.731	69.37	177.77	790.77	140.10	24.52
C1998-250-4250-S	2.890	73.42	177.77	790.77	130.76	22.88
C1998-250-4500-S	3.050	77.47	177.77	790.77	122.59	21.45
C1998-250-4750-S	3.209	81.51	177.77	790.77	115.38	20.19
C1998-250-5000-S	3.369	85.56	177.77	790.77	108.97	19.07

FOR INFORMATION ON ALTERNATIVE FINISHES, SEE PAGE 311

Part Numbers with an "*" are squared and not ground. **Part Numbers in bold** represent the newly expanded Associated Spring RAYMOND compression spring offering.

MUSIC WIRE															STAINLESS STEEL						
Catalog #	Outside Diameter (OD)		Wire Diameter (d)		Free Length (L) Approx		Load Length (L_1)		Solid Height (Sh) Approx		Load (P) at L_1		Spring Rate (R)		Catalog #	Load Length (L_1)		Load (P) at L_1		Spring Rate (R)	
	in	mm	in	mm	in	mm	in	mm	in	mm	lb	N	lb/in	N/mm		in	mm	lb	N	lb/in	N/mm
C1998-250-5250-M	1.998	50.75	0.250	6.35	5.250	133.35	3.094	78.60	2.850	72.38	255.90	1138.31	118.72	20.78	**C1998-250-5250-S**	3.528	89.61	177.77	790.77	103.23	18.07
C1998-250-5500-M	1.998	50.75	0.250	6.35	5.500	139.70	3.231	82.07	2.972	75.49	255.90	1138.31	112.78	19.74	**C1998-250-5500-S**	3.687	93.66	177.77	790.77	98.07	17.16
C1998-250-5750-M	1.998	50.75	0.250	6.35	5.750	146.05	3.367	85.53	3.094	78.60	255.90	1138.31	107.41	18.80	**C1998-250-5750-S**	3.847	97.70	177.77	790.77	93.40	16.34
C1998-250-6000-M	1.998	50.75	0.250	6.35	6.000	152.40	3.504	89.00	3.217	81.71	255.90	1138.31	102.53	17.94	**C1998-250-6000-S**	4.006	101.75	177.77	790.77	89.15	15.60
C1998-250-6250-M	1.998	50.75	0.250	6.35	6.250	158.75	3.641	92.47	3.339	84.81	255.90	1138.31	98.07	17.16	**C1998-250-6250-S**	4.165	105.80	177.77	790.77	85.28	14.92
C1998-250-6500-M	1.998	50.75	0.250	6.35	6.500	165.10	3.777	95.94	3.461	87.92	255.90	1138.31	93.98	16.45	**C1998-250-6500-S**	4.325	109.85	177.77	790.77	81.72	14.30
C1998-250-6750-M	1.998	50.75	0.250	6.35	6.750	171.45	3.914	99.41	3.584	91.03	255.90	1138.31	90.22	15.79	**C1998-250-6750-S**	4.484	113.90	177.77	790.77	78.46	13.73
C1998-250-7000-M	1.998	50.75	0.250	6.35	7.000	177.80	4.050	102.88	3.706	94.14	255.90	1138.31	86.75	15.18	**C1998-250-7000-S**	4.643	117.94	177.77	790.77	75.44	13.20
C1998-250-7500-M	1.998	50.75	0.250	6.35	7.500	190.50	4.323	109.81	3.951	100.35	255.90	1138.31	80.56	14.10	**C1998-250-7500-S**	4.962	126.04	177.77	790.77	70.05	12.26
C1998-250-8000-M	1.998	50.75	0.250	6.35	8.000	203.20	4.596	116.75	4.196	106.57	255.90	1138.31	75.19	13.16	**C1998-250-8000-S**	5.281	134.13	177.77	790.77	65.38	11.44
C1998-250-8500-M	1.998	50.75	0.250	6.35	8.500	215.90	4.870	123.69	4.440	112.78	255.90	1138.31	70.49	12.34	**C1998-250-8500-S**	5.600	142.23	177.77	790.77	61.29	10.73
C1998-250-9000-M	1.998	50.75	0.250	6.35	9.000	228.60	5.143	130.62	4.685	119.00	255.90	1138.31	66.34	11.61	**C1998-250-9000-S**	5.918	150.33	177.77	790.77	57.69	10.10
C1998-250-9500-M	1.998	50.75	0.250	6.35	9.500	241.30	5.416	137.56	4.930	125.21	255.90	1138.31	62.66	10.96	**C1998-250-9500-S**	6.237	158.42	177.77	790.77	54.48	9.53
C2056-162-3500-M	2.056	52.22	0.162	4.12	3.500	88.90	1.371	34.84	1.046	26.56	74.79	332.68	35.14	6.15	**C2056-162-3500-S**	1.683	42.74	55.53	247.00	30.55	5.35
C2056-162-3750-M	2.056	52.22	0.162	4.12	3.750	95.25	1.454	36.93	1.101	27.97	74.79	332.68	32.57	5.70	**C2056-162-3750-S**	1.790	45.45	55.53	247.00	28.32	4.96
C2056-162-4000-M	2.056	52.22	0.162	4.12	4.000	101.60	1.536	39.02	1.157	29.38	74.79	332.68	30.36	5.31	**C2056-162-4000-S**	1.896	48.17	55.53	247.00	26.40	4.62
C2056-162-4250-M	2.056	52.22	0.162	4.12	4.250	107.95	1.619	41.12	1.212	30.79	74.79	332.68	28.42	4.97	**C2056-162-4250-S**	2.003	50.89	55.53	247.00	24.72	4.33
C2056-162-4500-M	2.056	52.22	0.162	4.12	4.500	114.30	1.701	43.21	1.268	32.20	74.79	332.68	26.72	4.68	**C2056-162-4500-S**	2.110	53.60	55.53	247.00	23.24	4.07
C2056-162-4750-M	2.056	52.22	0.162	4.12	4.750	120.65	1.784	45.31	1.323	33.61	74.79	332.68	25.21	4.41	**C2056-162-4750-S**	2.217	56.32	55.53	247.00	21.93	3.84
C2056-162-5000-M	2.056	52.22	0.162	4.12	5.000	127.00	1.866	47.40	1.379	35.02	74.79	332.68	23.87	4.18	**C2056-162-5000-S**	2.324	59.04	55.53	247.00	20.75	3.63
C2056-162-5250-M	2.056	52.22	0.162	4.12	5.250	133.35	1.949	49.50	1.434	36.43	74.79	332.68	22.65	3.96	**C2056-162-5250-S**	2.431	61.75	55.53	247.00	19.70	3.45
C2056-162-5500-M	2.056	52.22	0.162	4.12	5.500	139.70	2.031	51.59	1.490	37.84	74.79	332.68	21.56	3.77	**C2056-162-5500-S**	2.538	64.47	55.53	247.00	18.75	3.28
C2056-162-5750-M	2.056	52.22	0.162	4.12	5.750	146.05	2.114	53.68	1.545	39.25	74.79	332.68	20.57	3.60	**C2056-162-5750-S**	2.645	67.18	55.53	247.00	17.88	3.13
C2056-162-6000-M	2.056	52.22	0.162	4.12	6.000	152.40	2.196	55.78	1.601	40.66	74.79	332.68	19.66	3.44	**C2056-162-6000-S**	2.752	69.90	55.53	247.00	17.10	2.99
C2056-162-6250-M	2.056	52.22	0.162	4.12	6.250	158.75	2.278	57.87	1.656	42.07	74.79	332.68	18.83	3.30	**C2056-162-6250-S**	2.859	72.62	55.53	247.00	16.38	2.87
C2056-162-6500-M	2.056	52.22	0.162	4.12	6.500	165.10	2.361	59.97	1.712	43.49	74.79	332.68	18.07	3.16	**C2056-162-6500-S**	2.966	75.33	55.53	247.00	15.71	2.75
C2056-162-6750-M	2.056	52.22	0.162	4.12	6.750	171.45	2.443	62.06	1.768	44.90	74.79	332.68	17.37	3.04	**C2056-162-6750-S**	3.073	78.05	55.53	247.00	15.10	2.64
C2056-162-7000-M	2.056	52.22	0.162	4.12	7.000	177.80	2.526	64.16	1.823	46.31	74.79	332.68	16.72	2.93	**C2056-162-7000-S**	3.180	80.77	55.53	247.00	14.54	2.54
C2056-162-7500-M	2.056	52.22	0.162	4.12	7.500	190.50	2.691	68.34	1.934	49.13	74.79	332.68	15.55	2.72	**C2056-162-7500-S**	3.394	86.20	55.53	247.00	13.52	2.37
C2056-162-8000-M	2.056	52.22	0.162	4.12	8.000	203.20	2.856	72.53	2.045	51.95	74.79	332.68	14.54	2.54	**C2056-162-8000-S**	3.608	91.63	55.53	247.00	12.64	2.21
C2056-162-8500-M	2.056	52.22	0.162	4.12	8.500	215.90	3.021	76.72	2.156	54.77	74.79	332.68	13.65	2.39	**C2056-162-8500-S**	3.821	97.06	55.53	247.00	11.87	2.08
C2056-162-9000-M	2.056	52.22	0.162	4.12	9.000	228.60	3.185	80.91	2.267	57.59	74.79	332.68	12.86	2.25	**C2056-162-9000-S**	4.035	102.50	55.53	247.00	11.19	1.96
C2056-162-9500-M	2.056	52.22	0.162	4.12	9.500	241.30	3.350	85.10	2.378	60.41	74.79	332.68	12.16	2.13	**C2056-162-9500-S**	4.249	107.93	55.53	247.00	10.58	1.85
C2056-177-3250-M	2.056	52.22	0.177	4.50	3.250	82.55	1.405	35.69	1.134	28.79	95.71	425.73	51.88	9.08	**C2056-177-3250-S**	1.693	43.00	70.24	312.46	45.11	7.89
C2056-177-3500-M	2.056	52.22	0.177	4.50	3.500	88.90	1.496	38.00	1.199	30.46	95.71	425.73	47.76	8.36	**C2056-177-3500-S**	1.808	45.94	70.24	312.46	41.53	7.27
C2056-177-3750-M	2.056	52.22	0.177	4.50	3.750	95.25	1.587	40.30	1.265	32.13	95.71	425.73	44.24	7.74	**C2056-177-3750-S**	1.924	48.87	70.24	312.46	38.47	6.73
C2056-177-4000-M	2.056	52.22	0.177	4.50	4.000	101.60	1.677	42.61	1.331	33.80	95.71	425.73	41.21	7.21	**C2056-177-4000-S**	2.040	51.81	70.24	312.46	35.83	6.27
C2056-177-4250-M	2.056	52.22	0.177	4.50	4.250	107.95	1.768	44.91	1.397	35.48	95.71	425.73	38.56	6.75	**C2056-177-4250-S**	2.155	54.74	70.24	312.46	33.53	5.87
C2056-177-4500-M	2.056	52.22	0.177	4.50	4.500	114.30	1.859	47.22	1.462	37.15	95.71	425.73	36.24	6.34	**C2056-177-4500-S**	2.271	57.68	70.24	312.46	31.51	5.51
C2056-177-4750-M	2.056	52.22	0.177	4.50	4.750	120.65	1.950	49.52	1.528	38.82	95.71	425.73	34.18	5.98	**C2056-177-4750-S**	2.386	60.61	70.24	312.46	29.72	5.20
C2056-177-5000-M	2.056	52.22	0.177	4.50	5.000	127.00	2.040	51.83	1.594	40.49	95.71	425.73	32.34	5.66	**C2056-177-5000-S**	2.502	63.55	70.24	312.46	28.12	4.92
C2056-177-5250-M	2.056	52.22	0.177	4.50	5.250	133.35	2.131	54.13	1.660	42.16	95.71	425.73	30.69	5.37	**C2056-177-5250-S**	2.618	66.49	70.24	312.46	26.68	4.67
C2056-177-5500-M	2.056	52.22	0.177	4.50	5.500	139.70	2.222	56.44	1.726	43.83	95.71	425.73	29.20	5.11	**C2056-177-5500-S**	2.733	69.42	70.24	312.46	25.39	4.44
C2056-177-5750-M	2.056	52.22	0.177	4.50	5.750	146.05	2.313	58.74	1.791	45.50	95.71	425.73	27.84	4.87	**C2056-177-5750-S**	2.849	72.36	70.24	312.46	24.21	4.24
C2056-177-6000-M	2.056	52.22	0.177	4.50	6.000	152.40	2.403	61.04	1.857	47.17	95.71	425.73	26.61	4.66	**C2056-177-6000-S**	2.964	75.29	70.24	312.46	23.14	4.05
C2056-177-6250-M	2.056	52.22	0.177	4.50	6.250	158.75	2.494	63.35	1.923	48.84	95.71	425.73	25.48	4.46	**C2056-177-6250-S**	3.080	78.23	70.24	312.46	22.16	3.88
C2056-177-6500-M	2.056	52.22	0.177	4.50	6.500	165.10	2.585	65.65	1.989	50.51	95.71	425.73	24.45	4.28	**C2056-177-6500-S**	3.195	81.16	70.24	312.46	21.26	3.72
C2056-177-6750-M	2.056	52.22	0.177	4.50	6.750	171.45	2.676	67.96	2.054	52.18	95.71	425.73	23.49	4.11	**C2056-177-6750-S**	3.311	84.10	70.24	312.46	20.43	3.57
C2056-177-7000-M	2.056	52.22	0.177	4.50	7.000	177.80	2.766	70.26	2.120	53.85	95.71	425.73	22.61	3.96	**C2056-177-7000-S**	3.427	87.04	70.24	312.46	19.66	3.44
C2056-177-7500-M	2.056	52.22	0.177	4.50	7.500	190.50	2.948	74.87	2.252	57.19	95.71	425.73	21.02	3.68	**C2056-177-7500-S**	3.658	92.91	70.24	312.46	18.28	3.20
C2056-177-8000-M	2.056	52.22	0.177	4.50	8.000	203.20	3.129	79.48	2.383	60.53	95.71	425.73	19.65	3.44	**C2056-177-8000-S**	3.889	98.78	70.24	312.46	17.09	2.99
C2056-177-8500-M*	2.056	52.22	0.177	4.50	8.500	215.90	3.424	86.96	2.654	67.41	95.71	425.73	18.85	3.30	**C2056-177-8500-S***	4.215	107.07	70.24	312.46	16.39	2.87
C2056-177-9000-M*	2.056	52.22	0.177	4.50	9.000	228.60	3.605	91.57	2.786	70.75	95.71	425.73	17.74	3.10	**C2056-177-9000-S***	4.446	112.94	70.24	312.46	15.43	2.70
C2056-177-9500-M*	2.056	52.22	0.177	4.50	9.500	241.30	3.787	96.18	2.917	74.10	95.71	425.73	16.75	2.93	**C2056-177-9500-S***	4.678	118.81	70.24	312.46	14.57	2.55
C2056-192-3250-M	2.056	52.22	0.192	4.88	3.250	82.55	1.523	38.67	1.279	32.48	120.00	533.78	69.47	12.16	**C2056-192-3250-S**	1.809	45.94	87.07	387.29	60.41	10.57
C2056-192-3500-M	2.056	52.22	0.192	4.88	3.500	88.90	1.622	41.20	1.355	34.42	120.00	533.78	63.89	11.18	**C2056-192-3500-S**	1.933	49.10	87.07	387.29	55.56	9.72
C2056-192-3750-M	2.056	52.22	0.192	4.88	3.750	95.25	1.721	43.72	1.431	36.35	120.00	533.78	59.15	10.35	**C2056-192-3750-S**	2.057	52.25	87.07	387.29	51.43	9.00
C2056-192-4000-M	2.056	52.22	0.192	4.88	4.000	101.60	1.820	46.24	1.508	38.29	120.00	533.78	55.06	9.64	**C2056-192-4000-S**	2.181	55.41	87.07	387.29	47.88	8.38
C2056-192-4250-M	2.056	52.22	0.192	4.88	4.250	107.95	1.920	48.76	1.584	40.23	120.00	533.78	51.50	9.01	**C2056-192-4250-S**	2.306	58.56	87.07	387.29	44.78	7.84
C2056-192-4500-M	2.056	52.22	0.192	4.88	4.500	114.30	2.019	51.29	1.660	42.17	120.00	533.78	48.37	8.46	**C2056-192-4500-S**	2.430	61.72	87.07	387.29	42.06	7.36
C2056-192-4750-M	2.056	52.22	0.192	4.88	4.750	120.65	2.118	53.81	1.737	44.11	120.00	533.78	45.60	7.98	**C2056-192-4750-S**	2.554	64.88	87.07	387.29	39.65	6.94
C2056-192-5000-M	2.056	52.22	0.192	4.88	5.000	127.00	2.218	56.33	1.813	46.05	120.00	533.78	43.13	7.55	**C2056-192-5000-S**	2.679	68.03	87.07	387.29	37.50	6.56
C2056-192-5250-M	2.056	52.22	0.192	4.88	5.250	133.35	2.317	58.85	1.889	47.99	120.00	533.78	40.91	7.16	**C2056-192-5250-S**	2.803	71.19	87.07	387.29	35.58	6.23
C2056-192-5500-M	2.056	52.22	0.192	4.88	5.500	139.70	2.416	61.38	1.966	49.93	120.00	533.78	38.92	6.81	**C2056-192-5500-S**	2.927	74.35	87.07	387.29	33.84	5.92

Part Numbers with an "*" are squared and not ground. **Part Numbers in bold** represent the newly expanded Associated Spring RAYMOND compression spring offering.

MUSIC WIRE															STAINLESS STEEL					
Catalog #	Outside Diameter (OD)		Wire Diameter (d)		Free Length (L) Approx		Load Length (L_1)		Solid Height (Sh) Approx		Load (P) at L_1		Spring Rate (R)		Catalog #	Load Length (L_1)		Load (P) at L_1		Spring Rate (R)	
	in	mm	in	mm	in	mm	in	mm	in	mm	lb	N	lb/in	N/mm		in	mm	lb	N	lb/in	N/mm
C2056-192-5750-M	2.056	52.22	0.192	4.88	5.750	146.05	2.516	63.90	2.042	51.87	120.00	533.78	37.10	6.49	C2056-192-5750-S	3.051	77.50	87.07	387.29	32.26	5.65
C2056-192-6000-M	2.056	52.22	0.192	4.88	6.000	152.40	2.615	66.42	2.119	53.81	120.00	533.78	35.45	6.20	C2056-192-6000-S	3.176	80.66	87.07	387.29	30.83	5.39
C2056-192-6250-M	2.056	52.22	0.192	4.88	6.250	158.75	2.714	68.94	2.195	55.75	120.00	533.78	33.94	5.94	C2056-192-6250-S	3.300	83.82	87.07	387.29	29.51	5.16
C2056-192-6500-M	2.056	52.22	0.192	4.88	6.500	165.10	2.814	71.47	2.271	57.69	120.00	533.78	32.55	5.70	C2056-192-6500-S	3.424	86.97	87.07	387.29	28.31	4.95
C2056-192-6750-M	2.056	52.22	0.192	4.88	6.750	171.45	2.913	73.99	2.348	59.63	120.00	533.78	31.27	5.47	C2056-192-6750-S	3.548	90.13	87.07	387.29	27.20	4.76
C2056-192-7000-M*	2.056	52.22	0.192	4.88	7.000	177.80	3.128	79.45	2.567	65.20	120.00	533.78	30.99	5.42	C2056-192-7000-S*	3.769	95.74	87.07	387.29	26.95	4.72
C2056-192-7500-M*	2.056	52.22	0.192	4.88	7.500	190.50	3.327	84.50	2.720	69.08	120.00	533.78	28.75	5.03	C2056-192-7500-S*	4.018	102.05	87.07	387.29	25.00	4.38
C2056-192-8000-M*	2.056	52.22	0.192	4.88	8.000	203.20	3.525	89.54	2.872	72.96	120.00	533.78	26.82	4.69	C2056-192-8000-S*	4.266	108.36	87.07	387.29	23.32	4.08
C2056-192-8500-M*	2.056	52.22	0.192	4.88	8.500	215.90	3.724	94.59	3.025	76.84	120.00	533.78	25.13	4.40	C2056-192-8500-S*	4.515	114.68	87.07	387.29	21.85	3.82
C2056-192-9000-M*	2.056	52.22	0.192	4.88	9.000	228.60	3.922	99.63	3.178	80.72	120.00	533.78	23.63	4.14	C2056-192-9000-S*	4.763	120.99	87.07	387.29	20.55	3.60
C2056-192-9500-M*	2.056	52.22	0.192	4.88	9.500	241.30	4.121	104.68	3.331	84.59	120.00	533.78	22.31	3.90	C2056-192-9500-S*	5.012	127.30	87.07	387.29	19.40	3.39
C2056-207-3000-M	2.056	52.22	0.207	5.26	3.000	76.20	1.531	38.90	1.336	33.93	147.86	657.73	100.69	17.62	C2056-207-3000-S	1.789	45.43	106.07	471.80	87.56	15.32
C2056-207-3250-M	2.056	52.22	0.207	5.26	3.250	82.55	1.640	41.64	1.423	36.15	147.86	657.73	91.81	16.07	C2056-207-3250-S	1.922	48.81	106.07	471.80	79.84	13.97
C2056-207-3500-M	2.056	52.22	0.207	5.26	3.500	88.90	1.748	44.39	1.510	38.36	147.86	657.73	84.38	14.77	C2056-207-3500-S	2.054	52.18	106.07	471.80	73.37	12.84
C2056-207-3750-M	2.056	52.22	0.207	5.26	3.750	95.25	1.856	47.13	1.597	40.57	147.86	657.73	78.05	13.66	C2056-207-3750-S	2.187	55.56	106.07	471.80	67.87	11.88
C2056-207-4000-M	2.056	52.22	0.207	5.26	4.000	101.60	1.964	49.88	1.684	42.79	147.86	657.73	72.61	12.71	C2056-207-4000-S	2.320	58.93	106.07	471.80	63.14	11.05
C2056-207-4250-M	2.056	52.22	0.207	5.26	4.250	107.95	2.072	52.62	1.772	45.00	147.86	657.73	67.88	11.88	C2056-207-4250-S	2.453	62.31	106.07	471.80	59.03	10.33
C2056-207-4500-M	2.056	52.22	0.207	5.26	4.500	114.30	2.180	55.36	1.859	47.21	147.86	657.73	63.73	11.15	C2056-207-4500-S	2.586	65.68	106.07	471.80	55.41	9.70
C2056-207-4750-M	2.056	52.22	0.207	5.26	4.750	120.65	2.288	58.11	1.946	49.42	147.86	657.73	60.05	10.51	C2056-207-4750-S	2.719	69.06	106.07	471.80	52.22	9.14
C2056-207-5000-M	2.056	52.22	0.207	5.26	5.000	127.00	2.396	60.85	2.033	51.64	147.86	657.73	56.78	9.94	C2056-207-5000-S	2.852	72.43	106.07	471.80	49.37	8.64
C2056-207-5250-M	2.056	52.22	0.207	5.26	5.250	133.35	2.504	63.60	2.120	53.85	147.86	657.73	53.84	9.42	C2056-207-5250-S	2.985	75.81	106.07	471.80	46.82	8.19
C2056-207-5500-M	2.056	52.22	0.207	5.26	5.500	139.70	2.612	66.34	2.207	56.06	147.86	657.73	51.20	8.96	C2056-207-5500-S	3.118	79.18	106.07	471.80	44.52	7.79
C2056-207-5750-M	2.056	52.22	0.207	5.26	5.750	146.05	2.720	69.08	2.294	58.28	147.86	657.73	48.80	8.54	C2056-207-5750-S	3.250	82.56	106.07	471.80	42.43	7.43
C2056-207-6000-M	2.056	52.22	0.207	5.26	6.000	152.40	2.828	71.83	2.382	60.49	147.86	657.73	46.61	8.16	C2056-207-6000-S	3.383	85.94	106.07	471.80	40.53	7.09
C2056-207-6250-M	2.056	52.22	0.207	5.26	6.250	158.75	2.936	74.57	2.469	62.70	147.86	657.73	44.62	7.81	C2056-207-6250-S	3.516	89.31	106.07	471.80	38.80	6.79
C2056-207-6500-M	2.056	52.22	0.207	5.26	6.500	165.10	3.044	77.32	2.556	64.92	147.86	657.73	42.78	7.49	C2056-207-6500-S	3.649	92.69	106.07	471.80	37.20	6.51
C2056-207-6750-M*	2.056	52.22	0.207	5.26	6.750	171.45	3.270	83.05	2.788	70.82	147.86	657.73	42.48	7.43	C2056-207-6750-S*	3.879	98.52	106.07	471.80	36.94	6.47
C2056-207-7000-M*	2.056	52.22	0.207	5.26	7.000	177.80	3.378	85.79	2.875	73.03	147.86	657.73	40.82	7.14	C2056-207-7000-S*	4.012	101.90	106.07	471.80	35.50	6.21
C2056-207-7500-M*	2.056	52.22	0.207	5.26	7.500	190.50	3.594	91.28	3.049	77.46	147.86	657.73	37.85	6.62	C2056-207-7500-S*	4.278	108.65	106.07	471.80	32.92	5.76
C2056-207-8000-M*	2.056	52.22	0.207	5.26	8.000	203.20	3.810	96.77	3.224	81.88	147.86	657.73	35.29	6.18	C2056-207-8000-S*	4.543	115.40	106.07	471.80	30.69	5.37
C2056-207-8500-M*	2.056	52.22	0.207	5.26	8.500	215.90	4.026	102.25	3.398	86.31	147.86	657.73	33.05	5.78	C2056-207-8500-S*	4.809	122.15	106.07	471.80	28.74	5.03
C2056-207-9000-M*	2.056	52.22	0.207	5.26	9.000	228.60	4.242	107.74	3.572	90.74	147.86	657.73	31.08	5.44	C2056-207-9000-S*	5.075	128.90	106.07	471.80	27.02	4.73
C2056-207-9500-M*	2.056	52.22	0.207	5.26	9.500	241.30	4.458	113.23	3.747	95.16	147.86	657.73	29.33	5.13	C2056-207-9500-S*	5.341	135.65	106.07	471.80	25.50	4.46
C2056-225-2875-M	2.056	52.22	0.225	5.72	2.875	73.03	1.600	40.63	1.443	36.66	186.29	828.64	146.06	25.56	C2056-225-2875-S	1.837	46.66	131.83	586.40	127.01	22.23
C2056-225-3000-M	2.056	52.22	0.225	5.72	3.000	76.20	1.659	42.13	1.493	37.93	186.29	828.64	138.90	24.31	C2056-225-3000-S	1.909	48.48	131.83	586.40	120.78	21.14
C2056-225-3250-M	2.056	52.22	0.225	5.72	3.250	82.55	1.777	45.15	1.593	40.47	186.29	828.64	126.50	22.14	C2056-225-3250-S	2.052	52.11	131.83	586.40	110.00	19.25
C2056-225-3500-M	2.056	52.22	0.225	5.72	3.500	88.90	1.896	48.16	1.693	43.01	186.29	828.64	116.13	20.32	C2056-225-3500-S	2.195	55.74	131.83	586.40	100.98	17.67
C2056-225-3750-M	2.056	52.22	0.225	5.72	3.750	95.25	2.014	51.17	1.794	45.56	186.29	828.64	107.33	18.78	C2056-225-3750-S	2.338	59.37	131.83	586.40	93.33	16.33
C2056-225-4000-M	2.056	52.22	0.225	5.72	4.000	101.60	2.133	54.18	1.894	48.10	186.29	828.64	99.77	17.46	C2056-225-4000-S	2.481	63.01	131.83	586.40	86.76	15.18
C2056-225-4250-M	2.056	52.22	0.225	5.72	4.250	107.95	2.251	57.19	1.994	50.64	186.29	828.64	93.21	16.31	C2056-225-4250-S	2.624	66.64	131.83	586.40	81.05	14.18
C2056-225-4500-M	2.056	52.22	0.225	5.72	4.500	114.30	2.370	60.20	2.094	53.18	186.29	828.64	87.46	15.30	C2056-225-4500-S	2.767	70.27	131.83	586.40	76.05	13.31
C2056-225-4750-M	2.056	52.22	0.225	5.72	4.750	120.65	2.488	63.21	2.194	55.72	186.29	828.64	82.37	14.42	C2056-225-4750-S	2.910	73.90	131.83	586.40	71.63	12.53
C2056-225-5000-M	2.056	52.22	0.225	5.72	5.000	127.00	2.607	66.22	2.294	58.27	186.29	828.64	77.85	13.62	C2056-225-5000-S	3.053	77.53	131.83	586.40	67.69	11.85
C2056-225-5250-M	2.056	52.22	0.225	5.72	5.250	133.35	2.725	69.23	2.394	60.81	186.29	828.64	73.79	12.91	C2056-225-5250-S	3.196	81.17	131.83	586.40	64.17	11.23
C2056-225-5500-M	2.056	52.22	0.225	5.72	5.500	139.70	2.844	72.24	2.494	63.35	186.29	828.64	70.14	12.27	C2056-225-5500-S	3.339	84.80	131.83	586.40	60.99	10.67
C2056-225-5750-M	2.056	52.22	0.225	5.72	5.750	146.05	2.963	75.25	2.594	65.89	186.29	828.64	66.83	11.70	C2056-225-5750-S	3.482	88.43	131.83	586.40	58.11	10.17
C2056-225-6000-M	2.056	52.22	0.225	5.72	6.000	152.40	3.081	78.26	2.694	68.43	186.29	828.64	63.82	11.17	C2056-225-6000-S	3.625	92.06	131.83	586.40	55.50	9.71
C2056-225-6250-M	2.056	52.22	0.225	5.72	6.250	158.75	3.200	81.27	2.794	70.98	186.29	828.64	61.07	10.69	C2056-225-6250-S	3.768	95.70	131.83	586.40	53.10	9.29
C2056-225-6500-M	2.056	52.22	0.225	5.72	6.500	165.10	3.318	84.28	2.894	73.52	186.29	828.64	58.55	10.25	C2056-225-6500-S	3.911	99.33	131.83	586.40	50.91	8.91
C2056-225-6750-M	2.056	52.22	0.225	5.72	6.750	171.45	3.437	87.29	2.994	76.06	186.29	828.64	56.22	9.84	C2056-225-6750-S	4.054	102.96	131.83	586.40	48.89	8.56
C2056-225-7000-M	2.056	52.22	0.225	5.72	7.000	177.80	3.555	90.30	3.095	78.60	186.29	828.64	54.08	9.46	C2056-225-7000-S	4.197	106.59	131.83	586.40	47.02	8.23
C2056-225-7500-M*	2.056	52.22	0.225	5.72	7.500	190.50	3.910	99.33	3.441	87.40	186.29	828.64	51.90	9.08	C2056-225-7500-S*	4.579	116.30	131.83	586.40	45.13	7.90
C2056-225-8000-M*	2.056	52.22	0.225	5.72	8.000	203.20	4.148	105.35	3.641	92.48	186.29	828.64	48.36	8.46	C2056-225-8000-S*	4.865	123.57	131.83	586.40	42.05	7.36
C2056-225-8500-M*	2.056	52.22	0.225	5.72	8.500	215.90	4.385	111.37	3.841	97.57	186.29	828.64	45.27	7.92	C2056-225-8500-S*	5.151	130.83	131.83	586.40	39.36	6.89
C2056-225-9000-M*	2.056	52.22	0.225	5.72	9.000	228.60	4.622	117.39	4.041	102.65	186.29	828.64	42.55	7.45	C2056-225-9000-S*	5.437	138.09	131.83	586.40	37.00	6.47
C2056-225-9500-M*	2.056	52.22	0.225	5.72	9.500	241.30	4.859	123.41	4.241	107.73	186.29	828.64	40.14	7.02	C2056-225-9500-S*	5.723	145.36	131.83	586.40	34.90	6.11
C2056-250-2750-M	2.056	52.22	0.250	6.35	2.750	69.85	1.695	43.05	1.584	40.24	249.22	1108.59	236.23	41.34	C2056-250-2750-S	1.907	48.44	173.13	770.13	205.42	35.95
C2056-250-2875-M	2.056	52.22	0.250	6.35	2.875	73.03	1.761	44.74	1.643	41.74	249.22	1108.59	223.80	39.16	C2056-250-2875-S	1.985	50.43	173.13	770.13	194.61	34.06
C2056-250-3000-M	2.056	52.22	0.250	6.35	3.000	76.20	1.828	46.43	1.702	43.23	249.22	1108.59	212.61	37.21	C2056-250-3000-S	2.064	52.41	173.13	770.13	184.88	32.35
C2056-250-3250-M	2.056	52.22	0.250	6.35	3.250	82.55	1.961	49.80	1.820	46.22	249.22	1108.59	193.28	33.82	C2056-250-3250-S	2.220	56.38	173.13	770.13	168.07	29.41
C2056-250-3500-M	2.056	52.22	0.250	6.35	3.500	88.90	2.093	53.17	1.937	49.21	249.22	1108.59	177.17	31.01	C2056-250-3500-S	2.376	60.36	173.13	770.13	154.06	26.96
C2056-250-3750-M	2.056	52.22	0.250	6.35	3.750	95.25	2.226	56.54	2.055	52.20	249.22	1108.59	163.54	28.62	C2056-250-3750-S	2.533	64.33	173.13	770.13	142.21	24.89
C2056-250-4000-M	2.056	52.22	0.250	6.35	4.000	101.60	2.359	59.92	2.173	55.19	249.22	1108.59	151.86	26.58	C2056-250-4000-S	2.689	68.30	173.13	770.13	132.05	23.11
C2056-250-4250-M	2.056	52.22	0.250	6.35	4.250	107.95	2.492	63.29	2.290	58.18	249.22	1108.59	141.74	24.80	C2056-250-4250-S	2.845	72.27	173.13	770.13	123.25	21.57

FOR INFORMATION ON ALTERNATIVE FINISHES, SEE PAGE 311

Part Numbers with an "*" are squared and not ground. **Part Numbers in bold** represent the newly expanded Associated Spring RAYMOND compression spring offering.

MUSIC WIRE															STAINLESS STEEL					
Catalog #	Outside Diameter (OD)		Wire Diameter (d)		Free Length (L) Approx		Load Length (L_1)		Solid Height (Sh) Approx		Load (P) at L_1		Spring Rate (R)		Catalog #	Load Length (L_1)		Load (P) at L_1		Spring Rate (R)	
	in	mm	in	mm	in	mm	in	mm	in	mm	lb	N	lb/in	N/mm		in	mm	lb	N	lb/in	N/mm
C2056-250-4500-M	2.056	52.22	0.250	6.35	4.500	114.30	2.624	66.66	2.408	61.17	249.22	1108.59	132.88	23.25	**C2056-250-4500-S**	3.002	76.24	173.13	770.13	115.55	20.22
C2056-250-4750-M	2.056	52.22	0.250	6.35	4.750	120.65	2.757	70.03	2.526	64.16	249.22	1108.59	125.06	21.89	**C2056-250-4750-S**	3.158	80.21	173.13	770.13	108.75	19.03
C2056-250-5000-M	2.056	52.22	0.250	6.35	5.000	127.00	2.890	73.41	2.644	67.15	249.22	1108.59	118.12	20.67	**C2056-250-5000-S**	3.314	84.18	173.13	770.13	102.71	17.97
C2056-250-5250-M	2.056	52.22	0.250	6.35	5.250	133.35	3.023	76.78	2.761	70.14	249.22	1108.59	111.90	19.58	**C2056-250-5250-S**	3.471	88.16	173.13	770.13	97.30	17.03
C2056-250-5500-M	2.056	52.22	0.250	6.35	5.500	139.70	3.156	80.15	2.879	73.13	249.22	1108.59	106.30	18.60	**C2056-250-5500-S**	3.627	92.13	173.13	770.13	92.44	16.18
C2056-250-5750-M	2.056	52.22	0.250	6.35	5.750	146.05	3.288	83.52	2.997	76.11	249.22	1108.59	101.24	17.72	**C2056-250-5750-S**	3.783	96.10	173.13	770.13	88.04	15.41
C2056-250-6000-M	2.056	52.22	0.250	6.35	6.000	152.40	3.421	86.90	3.114	79.10	249.22	1108.59	96.64	16.91	**C2056-250-6000-S**	3.940	100.07	173.13	770.13	84.04	14.71
C2056-250-6250-M	2.056	52.22	0.250	6.35	6.250	158.75	3.554	90.27	3.232	82.09	249.22	1108.59	92.44	16.18	**C2056-250-6250-S**	4.096	104.04	173.13	770.13	80.38	14.07
C2056-250-6500-M	2.056	52.22	0.250	6.35	6.500	165.10	3.687	93.64	3.350	85.08	249.22	1108.59	88.59	15.50	**C2056-250-6500-S**	4.252	108.01	173.13	770.13	77.03	13.48
C2056-250-6750-M	2.056	52.22	0.250	6.35	6.750	171.45	3.819	97.01	3.467	88.07	249.22	1108.59	85.04	14.88	**C2056-250-6750-S**	4.409	111.98	173.13	770.13	73.95	12.94
C2056-250-7000-M	2.056	52.22	0.250	6.35	7.000	177.80	3.952	100.39	3.585	91.06	249.22	1108.59	81.77	14.31	**C2056-250-7000-S**	4.565	115.95	173.13	770.13	71.11	12.44
C2056-250-7500-M	2.056	52.22	0.250	6.35	7.500	190.50	4.218	107.13	3.821	97.04	249.22	1108.59	75.93	13.29	**C2056-250-7500-S**	4.878	123.90	173.13	770.13	66.03	11.55
C2056-250-8000-M	2.056	52.22	0.250	6.35	8.000	203.20	4.483	113.88	4.056	103.02	249.22	1108.59	70.87	12.40	**C2056-250-8000-S**	5.191	131.84	173.13	770.13	61.63	10.78
C2056-250-8500-M	2.056	52.22	0.250	6.35	8.500	215.90	4.749	120.62	4.291	109.00	249.22	1108.59	66.44	11.63	**C2056-250-8500-S**	5.503	139.78	173.13	770.13	57.77	10.11
C2056-250-9000-M	2.056	52.22	0.250	6.35	9.000	228.60	5.014	127.37	4.527	114.98	249.22	1108.59	62.53	10.94	**C2056-250-9000-S**	5.816	147.73	173.13	770.13	54.38	9.52
C2056-250-9500-M	2.056	52.22	0.250	6.35	9.500	241.30	5.280	134.11	4.762	120.96	249.22	1108.59	59.06	10.34	**C2056-250-9500-S**	6.129	155.67	173.13	770.13	51.36	8.99
C2115-177-3500-M	2.115	53.72	0.177	4.50	3.500	88.90	1.463	37.17	1.159	29.45	93.15	414.36	45.74	8.00	**C2115-177-3500-S**	1.781	45.24	68.37	304.12	39.78	6.96
C2115-177-3750-M	2.115	53.72	0.177	4.50	3.750	95.25	1.552	39.41	1.222	31.04	93.15	414.36	42.37	7.42	**C2115-177-3750-S**	1.894	48.12	68.37	304.12	36.85	6.45
C2115-177-4000-M	2.115	53.72	0.177	4.50	4.000	101.60	1.640	41.65	1.284	32.63	93.15	414.36	39.47	6.91	**C2115-177-4000-S**	2.008	51.00	68.37	304.12	34.32	6.01
C2115-177-4250-M	2.115	53.72	0.177	4.50	4.250	107.95	1.728	43.89	1.347	34.21	93.15	414.36	36.94	6.46	**C2115-177-4250-S**	2.121	53.88	68.37	304.12	32.12	5.62
C2115-177-4500-M	2.115	53.72	0.177	4.50	4.500	114.30	1.816	46.13	1.410	35.80	93.15	414.36	34.71	6.07	**C2115-177-4500-S**	2.235	56.76	68.37	304.12	30.18	5.28
C2115-177-4750-M	2.115	53.72	0.177	4.50	4.750	120.65	1.904	48.37	1.472	37.39	93.15	414.36	32.74	5.73	**C2115-177-4750-S**	2.348	59.64	68.37	304.12	28.47	4.98
C2115-177-5000-M	2.115	53.72	0.177	4.50	5.000	127.00	1.992	50.61	1.535	38.98	93.15	414.36	30.97	5.42	**C2115-177-5000-S**	2.462	62.52	68.37	304.12	26.93	4.71
C2115-177-5250-M	2.115	53.72	0.177	4.50	5.250	133.35	2.081	52.85	1.597	40.57	93.15	414.36	29.39	5.14	**C2115-177-5250-S**	2.575	65.40	68.37	304.12	25.56	4.47
C2115-177-5500-M	2.115	53.72	0.177	4.50	5.500	139.70	2.169	55.09	1.660	42.16	93.15	414.36	27.96	4.89	**C2115-177-5500-S**	2.688	68.28	68.37	304.12	24.32	4.26
C2115-177-5750-M	2.115	53.72	0.177	4.50	5.750	146.05	2.257	57.33	1.723	43.75	93.15	414.36	26.67	4.67	**C2115-177-5750-S**	2.802	71.16	68.37	304.12	23.19	4.06
C2115-177-6000-M	2.115	53.72	0.177	4.50	6.000	152.40	2.345	59.57	1.785	45.34	93.15	414.36	25.49	4.46	**C2115-177-6000-S**	2.915	74.04	68.37	304.12	22.16	3.88
C2115-177-6250-M	2.115	53.72	0.177	4.50	6.250	158.75	2.433	61.81	1.848	46.93	93.15	414.36	24.41	4.27	**C2115-177-6250-S**	3.029	76.92	68.37	304.12	21.22	3.71
C2115-177-6500-M	2.115	53.72	0.177	4.50	6.500	165.10	2.521	64.04	1.910	48.52	93.15	414.36	23.41	4.10	**C2115-177-6500-S**	3.142	79.81	68.37	304.12	20.36	3.56
C2115-177-6750-M	2.115	53.72	0.177	4.50	6.750	171.45	2.610	66.28	1.973	50.11	93.15	414.36	22.50	3.94	**C2115-177-6750-S**	3.255	82.69	68.37	304.12	19.56	3.42
C2115-177-7000-M	2.115	53.72	0.177	4.50	7.000	177.80	2.698	68.52	2.035	51.70	93.15	414.36	21.65	3.79	**C2115-177-7000-S**	3.369	85.57	68.37	304.12	18.83	3.29
C2115-177-7500-M	2.115	53.72	0.177	4.50	7.500	190.50	2.874	73.00	2.161	54.88	93.15	414.36	20.14	3.52	**C2115-177-7500-S**	3.596	91.33	68.37	304.12	17.51	3.06
C2115-177-8000-M	2.115	53.72	0.177	4.50	8.000	203.20	3.050	77.48	2.286	58.06	93.15	414.36	18.82	3.29	**C2115-177-8000-S**	3.822	97.09	68.37	304.12	16.37	2.86
C2115-177-8500-M	2.115	53.72	0.177	4.50	8.500	215.90	3.227	81.96	2.411	61.24	93.15	414.36	17.67	3.09	**C2115-177-8500-S**	4.049	102.85	68.37	304.12	15.36	2.69
C2115-177-9000-M	2.115	53.72	0.177	4.50	9.000	228.60	3.403	86.44	2.536	64.42	93.15	414.36	16.64	2.91	**C2115-177-9000-S**	4.276	108.61	68.37	304.12	14.47	2.53
C2115-177-9500-M*	2.115	53.72	0.177	4.50	9.500	241.30	3.694	93.83	2.803	71.19	93.15	414.36	16.04	2.81	**C2115-177-9500-S***	4.600	116.83	68.37	304.12	13.95	2.44
C2115-192-3250-M	2.115	53.72	0.192	4.88	3.250	82.55	1.490	37.83	1.238	31.44	116.81	519.61	66.35	11.61	**C2115-192-3250-S**	1.781	45.24	84.75	377.01	57.70	10.10
C2115-192-3500-M	2.115	53.72	0.192	4.88	3.500	88.90	1.586	40.28	1.311	33.29	116.81	519.61	61.03	10.68	**C2115-192-3500-S**	1.903	48.34	84.75	377.01	53.07	9.29
C2115-192-3750-M	2.115	53.72	0.192	4.88	3.750	95.25	1.682	42.73	1.383	35.14	116.81	519.61	56.50	9.89	**C2115-192-3750-S**	2.025	51.43	84.75	377.01	49.13	8.60
C2115-192-4000-M	2.115	53.72	0.192	4.88	4.000	101.60	1.779	45.18	1.456	36.99	116.81	519.61	52.59	9.20	**C2115-192-4000-S**	2.147	54.53	84.75	377.01	45.73	8.00
C2115-192-4250-M	2.115	53.72	0.192	4.88	4.250	107.95	1.875	47.63	1.529	38.84	116.81	519.61	49.19	8.61	**C2115-192-4250-S**	2.269	57.62	84.75	377.01	42.78	7.49
C2115-192-4500-M	2.115	53.72	0.192	4.88	4.500	114.30	1.972	50.08	1.602	40.69	116.81	519.61	46.20	8.09	**C2115-192-4500-S**	2.390	60.72	84.75	377.01	40.18	7.03
C2115-192-4750-M	2.115	53.72	0.192	4.88	4.750	120.65	2.068	52.53	1.675	42.54	116.81	519.61	43.56	7.62	**C2115-192-4750-S**	2.512	63.81	84.75	377.01	37.88	6.63
C2115-192-5000-M	2.115	53.72	0.192	4.88	5.000	127.00	2.165	54.98	1.747	44.39	116.81	519.61	41.20	7.21	**C2115-192-5000-S**	2.634	66.91	84.75	377.01	35.83	6.27
C2115-192-5250-M	2.115	53.72	0.192	4.88	5.250	133.35	2.261	57.43	1.820	46.23	116.81	519.61	39.08	6.84	**C2115-192-5250-S**	2.756	70.00	84.75	377.01	33.98	5.95
C2115-192-5500-M	2.115	53.72	0.192	4.88	5.500	139.70	2.357	59.88	1.893	48.08	116.81	519.61	37.17	6.51	**C2115-192-5500-S**	2.878	73.10	84.75	377.01	32.32	5.66
C2115-192-5750-M	2.115	53.72	0.192	4.88	5.750	146.05	2.454	62.33	1.966	49.93	116.81	519.61	35.44	6.20	**C2115-192-5750-S**	3.000	76.19	84.75	377.01	30.82	5.39
C2115-192-6000-M	2.115	53.72	0.192	4.88	6.000	152.40	2.550	64.78	2.039	51.78	116.81	519.61	33.86	5.93	**C2115-192-6000-S**	3.122	79.29	84.75	377.01	29.45	5.15
C2115-192-6250-M	2.115	53.72	0.192	4.88	6.250	158.75	2.647	67.23	2.111	53.63	116.81	519.61	32.42	5.67	**C2115-192-6250-S**	3.244	82.39	84.75	377.01	28.19	4.93
C2115-192-6500-M	2.115	53.72	0.192	4.88	6.500	165.10	2.743	69.68	2.184	55.48	116.81	519.61	31.09	5.44	**C2115-192-6500-S**	3.365	85.48	84.75	377.01	27.04	4.73
C2115-192-6750-M	2.115	53.72	0.192	4.88	6.750	171.45	2.840	72.13	2.257	57.33	116.81	519.61	29.87	5.23	**C2115-192-6750-S**	3.487	88.58	84.75	377.01	25.98	4.55
C2115-192-7000-M	2.115	53.72	0.192	4.88	7.000	177.80	2.936	74.58	2.330	59.18	116.81	519.61	28.74	5.03	**C2115-192-7000-S**	3.609	91.67	84.75	377.01	25.00	4.37
C2115-192-7500-M*	2.115	53.72	0.192	4.88	7.500	190.50	3.247	82.47	2.621	66.58	116.81	519.61	27.47	4.81	**C2115-192-7500-S***	3.951	100.36	84.75	377.01	23.88	4.18
C2115-192-8000-M*	2.115	53.72	0.192	4.88	8.000	203.20	3.440	87.37	2.767	70.28	116.81	519.61	25.62	4.48	**C2115-192-8000-S***	4.195	106.55	84.75	377.01	22.28	3.90
C2115-192-8500-M*	2.115	53.72	0.192	4.88	8.500	215.90	3.633	92.27	2.912	73.98	116.81	519.61	24.00	4.20	**C2115-192-8500-S***	4.439	112.74	84.75	377.01	20.87	3.65
C2115-192-9000-M*	2.115	53.72	0.192	4.88	9.000	228.60	3.826	97.17	3.058	77.67	116.81	519.61	22.58	3.95	**C2115-192-9000-S***	4.683	118.94	84.75	377.01	19.63	3.44
C2115-192-9500-M*	2.115	53.72	0.192	4.88	9.500	241.30	4.018	102.07	3.204	81.37	116.81	519.61	21.31	3.73	**C2115-192-9500-S***	4.926	125.13	84.75	377.01	18.53	3.24
C2115-207-3250-M	2.115	53.72	0.207	5.26	3.250	82.55	1.604	40.74	1.379	35.03	143.96	640.37	87.45	15.30	**C2115-207-3250-S**	1.892	48.06	103.27	459.35	76.05	13.31
C2115-207-3500-M	2.115	53.72	0.207	5.26	3.500	88.90	1.709	43.40	1.462	37.14	143.96	640.37	80.37	14.06	**C2115-207-3500-S**	2.022	51.37	103.27	459.35	69.89	12.23
C2115-207-3750-M	2.115	53.72	0.207	5.26	3.750	95.25	1.814	46.07	1.546	39.26	143.96	640.37	74.35	13.01	**C2115-207-3750-S**	2.153	54.68	103.27	459.35	64.65	11.31
C2115-207-4000-M	2.115	53.72	0.207	5.26	4.000	101.60	1.919	48.73	1.629	41.37	143.96	640.37	69.16	12.10	**C2115-207-4000-S**	2.283	57.99	103.27	459.35	60.14	10.52
C2115-207-4250-M	2.115	53.72	0.207	5.26	4.250	107.95	2.023	51.40	1.712	43.49	143.96	640.37	64.66	11.31	**C2115-207-4250-S**	2.413	61.30	103.27	459.35	56.22	9.84
C2115-207-4500-M	2.115	53.72	0.207	5.26	4.500	114.30	2.128	54.06	1.795	45.60	143.96	640.37	60.70	10.62	**C2115-207-4500-S**	2.544	64.61	103.27	459.35	52.78	9.24
C2115-207-4750-M	2.115	53.72	0.207	5.26	4.750	120.65	2.233	56.72	1.879	47.71	143.96	640.37	57.20	10.01	**C2115-207-4750-S**	2.674	67.92	103.27	459.35	49.74	8.70

Part Numbers with an "*" are squared and not ground. **Part Numbers in bold** represent the newly expanded Associated Spring RAYMOND compression spring offering.

MUSIC WIRE															STAINLESS STEEL					
Catalog #	Outside Diameter (OD)		Wire Diameter (d)		Free Length (L) Approx		Load Length (L_1)		Solid Height (Sh) Approx		Load (P) at L_1		Spring Rate (R)		Catalog #	Load Length (L_1)		Load (P) at L_1		Spring Rate (R)	
	in	mm	in	mm	in	mm	in	mm	in	mm	lb	N	lb/in	N/mm		in	mm	lb	N	lb/in	N/mm
C2115-207-5000-M	**2.115**	**53.72**	**0.207**	**5.26**	**5.000**	**127.00**	**2.338**	**59.39**	**1.962**	**49.83**	**143.96**	**640.37**	**54.08**	**9.46**	**C2115-207-5000-S**	**2.804**	**71.23**	**103.27**	**459.35**	**47.03**	**8.23**
C2115-207-5250-M	**2.115**	**53.72**	**0.207**	**5.26**	**5.250**	**133.35**	**2.443**	**62.05**	**2.045**	**51.94**	**143.96**	**640.37**	**51.29**	**8.98**	**C2115-207-5250-S**	**2.934**	**74.54**	**103.27**	**459.35**	**44.60**	**7.80**
C2115-207-5500-M	**2.115**	**53.72**	**0.207**	**5.26**	**5.500**	**139.70**	**2.548**	**64.72**	**2.128**	**54.06**	**143.96**	**640.37**	**48.77**	**8.53**	**C2115-207-5500-S**	**3.065**	**77.85**	**103.27**	**459.35**	**42.41**	**7.42**
C2115-207-5750-M	**2.115**	**53.72**	**0.207**	**5.26**	**5.750**	**146.05**	**2.653**	**67.38**	**2.212**	**56.17**	**143.96**	**640.37**	**46.48**	**8.13**	**C2115-207-5750-S**	**3.195**	**81.15**	**103.27**	**459.35**	**40.42**	**7.07**
C2115-207-6000-M	**2.115**	**53.72**	**0.207**	**5.26**	**6.000**	**152.40**	**2.758**	**70.04**	**2.295**	**58.29**	**143.96**	**640.37**	**44.40**	**7.77**	**C2115-207-6000-S**	**3.325**	**84.46**	**103.27**	**459.35**	**38.61**	**6.76**
C2115-207-6250-M	**2.115**	**53.72**	**0.207**	**5.26**	**6.250**	**158.75**	**2.863**	**72.71**	**2.378**	**60.40**	**143.96**	**640.37**	**42.50**	**7.44**	**C2115-207-6250-S**	**3.456**	**87.77**	**103.27**	**459.35**	**36.96**	**6.47**
C2115-207-6500-M	**2.115**	**53.72**	**0.207**	**5.26**	**6.500**	**165.10**	**2.967**	**75.37**	**2.461**	**62.52**	**143.96**	**640.37**	**40.75**	**7.13**	**C2115-207-6500-S**	**3.586**	**91.08**	**103.27**	**459.35**	**35.44**	**6.20**
C2115-207-6750-M*	**2.115**	**53.72**	**0.207**	**5.26**	**6.750**	**171.45**	**3.192**	**81.09**	**2.693**	**68.40**	**143.96**	**640.37**	**40.47**	**7.08**	**C2115-207-6750-S***	**3.815**	**96.91**	**103.27**	**459.35**	**35.19**	**6.16**
C2115-207-7000-M*	**2.115**	**53.72**	**0.207**	**5.26**	**7.000**	**177.80**	**3.297**	**83.75**	**2.776**	**70.51**	**143.96**	**640.37**	**38.88**	**6.80**	**C2115-207-7000-S***	**3.946**	**100.22**	**103.27**	**459.35**	**33.81**	**5.92**
C2115-207-7500-M*	**2.115**	**53.72**	**0.207**	**5.26**	**7.500**	**190.50**	**3.507**	**89.08**	**2.943**	**74.74**	**143.96**	**640.37**	**36.06**	**6.31**	**C2115-207-7500-S***	**4.206**	**106.84**	**103.27**	**459.35**	**31.35**	**5.49**
C2115-207-8000-M*	**2.115**	**53.72**	**0.207**	**5.26**	**8.000**	**203.20**	**3.717**	**94.41**	**3.109**	**78.97**	**143.96**	**640.37**	**33.61**	**5.88**	**C2115-207-8000-S***	**4.467**	**113.46**	**103.27**	**459.35**	**29.23**	**5.11**
C2115-207-8500-M*	**2.115**	**53.72**	**0.207**	**5.26**	**8.500**	**215.90**	**3.927**	**99.74**	**3.276**	**83.20**	**143.96**	**640.37**	**31.48**	**5.51**	**C2115-207-8500-S***	**4.727**	**120.08**	**103.27**	**459.35**	**27.37**	**4.79**
C2115-207-9000-M*	**2.115**	**53.72**	**0.207**	**5.26**	**9.000**	**228.60**	**4.136**	**105.07**	**3.442**	**87.43**	**143.96**	**640.37**	**29.60**	**5.18**	**C2115-207-9000-S***	**4.988**	**126.70**	**103.27**	**459.35**	**25.74**	**4.50**
C2115-207-9500-M*	**2.115**	**53.72**	**0.207**	**5.26**	**9.500**	**241.30**	**4.346**	**110.40**	**3.609**	**91.66**	**143.96**	**640.37**	**27.93**	**4.89**	**C2115-207-9500-S***	**5.249**	**133.32**	**103.27**	**459.35**	**24.29**	**4.25**
C2115-225-3000-M	**2.115**	**53.72**	**0.225**	**5.72**	**3.000**	**76.20**	**1.624**	**41.25**	**1.450**	**36.84**	**181.41**	**806.93**	**131.84**	**23.07**	**C2115-225-3000-S**	**1.880**	**47.76**	**128.37**	**571.03**	**114.65**	**20.06**
C2115-225-3250-M	**2.115**	**53.72**	**0.225**	**5.72**	**3.250**	**82.55**	**1.739**	**44.18**	**1.546**	**39.27**	**181.41**	**806.93**	**120.07**	**21.01**	**C2115-225-3250-S**	**2.020**	**51.32**	**128.37**	**571.03**	**104.41**	**18.27**
C2115-225-3500-M	**2.115**	**53.72**	**0.225**	**5.72**	**3.500**	**88.90**	**1.854**	**47.10**	**1.642**	**41.71**	**181.41**	**806.93**	**110.23**	**19.29**	**C2115-225-3500-S**	**2.161**	**54.88**	**128.37**	**571.03**	**95.85**	**16.77**
C2115-225-3750-M	**2.115**	**53.72**	**0.225**	**5.72**	**3.750**	**95.25**	**1.969**	**50.02**	**1.738**	**44.14**	**181.41**	**806.93**	**101.88**	**17.83**	**C2115-225-3750-S**	**2.301**	**58.44**	**128.37**	**571.03**	**88.59**	**15.50**
C2115-225-4000-M	**2.115**	**53.72**	**0.225**	**5.72**	**4.000**	**101.60**	**2.085**	**52.95**	**1.834**	**46.58**	**181.41**	**806.93**	**94.70**	**16.57**	**C2115-225-4000-S**	**2.441**	**62.01**	**128.37**	**571.03**	**82.35**	**14.41**
C2115-225-4250-M	**2.115**	**53.72**	**0.225**	**5.72**	**4.250**	**107.95**	**2.200**	**55.87**	**1.930**	**49.01**	**181.41**	**806.93**	**88.47**	**15.48**	**C2115-225-4250-S**	**2.581**	**65.57**	**128.37**	**571.03**	**76.93**	**13.46**
C2115-225-4500-M	**2.115**	**53.72**	**0.225**	**5.72**	**4.500**	**114.30**	**2.315**	**58.79**	**2.026**	**51.45**	**181.41**	**806.93**	**83.01**	**14.53**	**C2115-225-4500-S**	**2.722**	**69.13**	**128.37**	**571.03**	**72.19**	**12.63**
C2115-225-4750-M	**2.115**	**53.72**	**0.225**	**5.72**	**4.750**	**120.65**	**2.430**	**61.72**	**2.121**	**53.88**	**181.41**	**806.93**	**78.19**	**13.68**	**C2115-225-4750-S**	**2.862**	**72.69**	**128.37**	**571.03**	**67.99**	**11.90**
C2115-225-5000-M	**2.115**	**53.72**	**0.225**	**5.72**	**5.000**	**127.00**	**2.545**	**64.64**	**2.217**	**56.32**	**181.41**	**806.93**	**73.89**	**12.93**	**C2115-225-5000-S**	**3.002**	**76.25**	**128.37**	**571.03**	**64.25**	**11.24**
C2115-225-5250-M	**2.115**	**53.72**	**0.225**	**5.72**	**5.250**	**133.35**	**2.660**	**67.56**	**2.313**	**58.75**	**181.41**	**806.93**	**70.04**	**12.26**	**C2115-225-5250-S**	**3.142**	**79.81**	**128.37**	**571.03**	**60.91**	**10.66**
C2115-225-5500-M	**2.115**	**53.72**	**0.225**	**5.72**	**5.500**	**139.70**	**2.775**	**70.49**	**2.409**	**61.19**	**181.41**	**806.93**	**66.57**	**11.65**	**C2115-225-5500-S**	**3.282**	**83.38**	**128.37**	**571.03**	**57.89**	**10.13**
C2115-225-5750-M	**2.115**	**53.72**	**0.225**	**5.72**	**5.750**	**146.05**	**2.890**	**73.41**	**2.505**	**63.62**	**181.41**	**806.93**	**63.43**	**11.10**	**C2115-225-5750-S**	**3.423**	**86.94**	**128.37**	**571.03**	**55.16**	**9.65**
C2115-225-6000-M	**2.115**	**53.72**	**0.225**	**5.72**	**6.000**	**152.40**	**3.005**	**76.34**	**2.601**	**66.06**	**181.41**	**806.93**	**60.58**	**10.60**	**C2115-225-6000-S**	**3.563**	**90.50**	**128.37**	**571.03**	**52.68**	**9.22**
C2115-225-6250-M	**2.115**	**53.72**	**0.225**	**5.72**	**6.250**	**158.75**	**3.120**	**79.26**	**2.697**	**68.49**	**181.41**	**806.93**	**57.97**	**10.14**	**C2115-225-6250-S**	**3.703**	**94.06**	**128.37**	**571.03**	**50.41**	**8.82**
C2115-225-6500-M	**2.115**	**53.72**	**0.225**	**5.72**	**6.500**	**165.10**	**3.236**	**82.18**	**2.792**	**70.93**	**181.41**	**806.93**	**55.57**	**9.72**	**C2115-225-6500-S**	**3.843**	**97.62**	**128.37**	**571.03**	**48.32**	**8.46**
C2115-225-6750-M	**2.115**	**53.72**	**0.225**	**5.72**	**6.750**	**171.45**	**3.351**	**85.11**	**2.888**	**73.36**	**181.41**	**806.93**	**53.37**	**9.34**	**C2115-225-6750-S**	**3.984**	**101.18**	**128.37**	**571.03**	**46.41**	**8.12**
C2115-225-7000-M	**2.115**	**53.72**	**0.225**	**5.72**	**7.000**	**177.80**	**3.466**	**88.03**	**2.984**	**75.80**	**181.41**	**806.93**	**51.33**	**8.98**	**C2115-225-7000-S**	**4.124**	**104.75**	**128.37**	**571.03**	**44.63**	**7.81**
C2115-225-7500-M*	**2.115**	**53.72**	**0.225**	**5.72**	**7.500**	**190.50**	**3.817**	**96.96**	**3.326**	**84.48**	**181.41**	**806.93**	**49.26**	**8.62**	**C2115-225-7500-S***	**4.503**	**114.38**	**128.37**	**571.03**	**42.84**	**7.50**
C2115-225-8000-M*	**2.115**	**53.72**	**0.225**	**5.72**	**8.000**	**203.20**	**4.048**	**102.81**	**3.518**	**89.35**	**181.41**	**806.93**	**45.90**	**8.03**	**C2115-225-8000-S***	**4.784**	**121.50**	**128.37**	**571.03**	**39.91**	**6.98**
C2115-225-8500-M*	**2.115**	**53.72**	**0.225**	**5.72**	**8.500**	**215.90**	**4.278**	**108.66**	**3.709**	**94.22**	**181.41**	**806.93**	**42.97**	**7.52**	**C2115-225-8500-S***	**5.064**	**128.62**	**128.37**	**571.03**	**37.36**	**6.54**
C2115-225-9000-M*	**2.115**	**53.72**	**0.225**	**5.72**	**9.000**	**228.60**	**4.508**	**114.50**	**3.901**	**99.09**	**181.41**	**806.93**	**40.38**	**7.07**	**C2115-225-9000-S***	**5.344**	**135.75**	**128.37**	**571.03**	**35.12**	**6.15**
C2115-225-9500-M*	**2.115**	**53.72**	**0.225**	**5.72**	**9.500**	**241.30**	**4.738**	**120.35**	**4.093**	**103.96**	**181.41**	**806.93**	**38.10**	**6.67**	**C2115-225-9500-S***	**5.625**	**142.87**	**128.37**	**571.03**	**33.13**	**5.80**
C2115-250-2875-M	**2.115**	**53.72**	**0.250**	**6.35**	**2.875**	**73.03**	**1.726**	**43.85**	**1.600**	**40.64**	**242.77**	**1079.88**	**211.38**	**36.99**	**C2115-250-2875-S**	**1.957**	**49.72**	**168.65**	**750.18**	**183.80**	**32.17**
C2115-250-3000-M	**2.115**	**53.72**	**0.250**	**6.35**	**3.000**	**76.20**	**1.791**	**45.49**	**1.657**	**42.08**	**242.77**	**1079.88**	**200.81**	**35.14**	**C2115-250-3000-S**	**2.034**	**51.67**	**168.65**	**750.18**	**174.61**	**30.56**
C2115-250-3250-M	**2.115**	**53.72**	**0.250**	**6.35**	**3.250**	**82.55**	**1.920**	**48.77**	**1.770**	**44.95**	**242.77**	**1079.88**	**182.55**	**31.95**	**C2115-250-3250-S**	**2.188**	**55.56**	**168.65**	**750.18**	**158.74**	**27.78**
C2115-250-3500-M	**2.115**	**53.72**	**0.250**	**6.35**	**3.500**	**88.90**	**2.049**	**52.05**	**1.883**	**47.83**	**242.77**	**1079.88**	**167.34**	**29.28**	**C2115-250-3500-S**	**2.341**	**59.46**	**168.65**	**750.18**	**145.51**	**25.46**
C2115-250-3750-M	**2.115**	**53.72**	**0.250**	**6.35**	**3.750**	**95.25**	**2.178**	**55.33**	**1.996**	**50.70**	**242.77**	**1079.88**	**154.47**	**27.03**	**C2115-250-3750-S**	**2.494**	**63.36**	**168.65**	**750.18**	**134.32**	**23.51**
C2115-250-4000-M	**2.115**	**53.72**	**0.250**	**6.35**	**4.000**	**101.60**	**2.307**	**58.61**	**2.109**	**53.57**	**242.77**	**1079.88**	**143.43**	**25.10**	**C2115-250-4000-S**	**2.648**	**67.25**	**168.65**	**750.18**	**124.72**	**21.83**
C2115-250-4250-M	**2.115**	**53.72**	**0.250**	**6.35**	**4.250**	**107.95**	**2.437**	**61.89**	**2.222**	**56.45**	**242.77**	**1079.88**	**133.87**	**23.43**	**C2115-250-4250-S**	**2.801**	**71.15**	**168.65**	**750.18**	**116.41**	**20.37**
C2115-250-4500-M	**2.115**	**53.72**	**0.250**	**6.35**	**4.500**	**114.30**	**2.566**	**65.17**	**2.336**	**59.32**	**242.77**	**1079.88**	**125.50**	**21.96**	**C2115-250-4500-S**	**2.955**	**75.05**	**168.65**	**750.18**	**109.13**	**19.10**
C2115-250-4750-M	**2.115**	**53.72**	**0.250**	**6.35**	**4.750**	**120.65**	**2.695**	**68.45**	**2.449**	**62.20**	**242.77**	**1079.88**	**118.12**	**20.67**	**C2115-250-4750-S**	**3.108**	**78.95**	**168.65**	**750.18**	**102.71**	**17.97**
C2115-250-5000-M	**2.115**	**53.72**	**0.250**	**6.35**	**5.000**	**127.00**	**2.824**	**71.73**	**2.562**	**65.07**	**242.77**	**1079.88**	**111.56**	**19.52**	**C2115-250-5000-S**	**3.261**	**82.84**	**168.65**	**750.18**	**97.01**	**16.98**
C2115-250-5250-M	**2.115**	**53.72**	**0.250**	**6.35**	**5.250**	**133.35**	**2.953**	**75.01**	**2.675**	**67.94**	**242.77**	**1079.88**	**105.69**	**18.50**	**C2115-250-5250-S**	**3.415**	**86.74**	**168.65**	**750.18**	**91.90**	**16.08**
C2115-250-5500-M	**2.115**	**53.72**	**0.250**	**6.35**	**5.500**	**139.70**	**3.082**	**78.28**	**2.788**	**70.82**	**242.77**	**1079.88**	**100.40**	**17.57**	**C2115-250-5500-S**	**3.568**	**90.64**	**168.65**	**750.18**	**87.31**	**15.28**
C2115-250-5750-M	**2.115**	**53.72**	**0.250**	**6.35**	**5.750**	**146.05**	**3.211**	**81.56**	**2.901**	**73.69**	**242.77**	**1079.88**	**95.62**	**16.73**	**C2115-250-5750-S**	**3.722**	**94.53**	**168.65**	**750.18**	**83.15**	**14.55**
C2115-250-6000-M	**2.115**	**53.72**	**0.250**	**6.35**	**6.000**	**152.40**	**3.340**	**84.84**	**3.014**	**76.57**	**242.77**	**1079.88**	**91.28**	**15.97**	**C2115-250-6000-S**	**3.875**	**98.43**	**168.65**	**750.18**	**79.37**	**13.89**
C2115-250-6250-M	**2.115**	**53.72**	**0.250**	**6.35**	**6.250**	**158.75**	**3.469**	**88.12**	**3.128**	**79.44**	**242.77**	**1079.88**	**87.31**	**15.28**	**C2115-250-6250-S**	**4.029**	**102.33**	**168.65**	**750.18**	**75.92**	**13.29**
C2115-250-6500-M	**2.115**	**53.72**	**0.250**	**6.35**	**6.500**	**165.10**	**3.598**	**91.40**	**3.241**	**82.32**	**242.77**	**1079.88**	**83.67**	**14.64**	**C2115-250-6500-S**	**4.182**	**106.22**	**168.65**	**750.18**	**72.76**	**12.73**
C2115-250-6750-M	**2.115**	**53.72**	**0.250**	**6.35**	**6.750**	**171.45**	**3.728**	**94.68**	**3.354**	**85.19**	**242.77**	**1079.88**	**80.32**	**14.06**	**C2115-250-6750-S**	**4.335**	**110.12**	**168.65**	**750.18**	**69.85**	**12.22**
C2115-250-7000-M	**2.115**	**53.72**	**0.250**	**6.35**	**7.000**	**177.80**	**3.857**	**97.96**	**3.467**	**88.06**	**242.77**	**1079.88**	**77.23**	**13.52**	**C2115-250-7000-S**	**4.489**	**114.02**	**168.65**	**750.18**	**67.16**	**11.75**
C2115-250-7500-M	**2.115**	**53.72**	**0.250**	**6.35**	**7.500**	**190.50**	**4.115**	**104.52**	**3.693**	**93.81**	**242.77**	**1079.88**	**71.72**	**12.55**	**C2115-250-7500-S**	**4.796**	**121.81**	**168.65**	**750.18**	**62.36**	**10.91**
C2115-250-8000-M	**2.115**	**53.72**	**0.250**	**6.35**	**8.000**	**203.20**	**4.373**	**111.08**	**3.920**	**99.56**	**242.77**	**1079.88**	**66.94**	**11.71**	**C2115-250-8000-S**	**5.102**	**129.60**	**168.65**	**750.18**	**58.21**	**10.19**
C2115-250-8500-M	**2.115**	**53.72**	**0.250**	**6.35**	**8.500**	**215.90**	**4.631**	**117.64**	**4.146**	**105.31**	**242.77**	**1079.88**	**62.75**	**10.98**	**C2115-250-8500-S**	**5.409**	**137.40**	**168.65**	**750.18**	**54.57**	**9.55**
C2115-250-9000-M	**2.115**	**53.72**	**0.250**	**6.35**	**9.000**	**228.60**	**4.890**	**124.19**	**4.372**	**111.06**	**242.77**	**1079.88**	**59.06**	**10.34**	**C2115-250-9000-S**	**5.716**	**145.19**	**168.65**	**750.18**	**51.36**	**8.99**
C2115-250-9500-M	**2.115**	**53.72**	**0.250**	**6.35**	**9.500**	**241.30**	**5.148**	**130.75**	**4.599**	**116.81**	**242.77**	**1079.88**	**55.78**	**9.76**	**C2115-250-9500-S**	**6.023**	**152.98**	**168.65**	**750.18**	**48.50**	**8.49**
D13730	2.126	54.00	0.157	4.00	3.898	99.00	1.079	27.40	0.866	22.00	95.90	426.59	34.00	5.95	D23730	1.079	27.40	79.92	355.49	28.34	4.96
D13740	2.126	54.00	0.157	4.00	5.906	150.00	1.520	38.60	1.181	30.00	95.90	426.59	21.66	3.79	D23740	1.520	38.60	79.92	355.49	18.06	3.16
D13750	2.126	54.00	0.157	4.00	9.055	230.00	2.181	55.40	1.654	42.00	95.90	426.59	14.00	2.45	D23750	2.181	55.40	79.92	355.49	11.66	2.04
D13760	2.126	54.00	0.157	4.00	13.189	335.00	3.063	77.80	2.283	58.00	95.90	426.59	9.54	1.67	D23760	3.063	77.80	79.92	355.49	7.94	1.39
D13770	2.126	54.00	0.157	4.00	19.291	490.00	4.370	111.00	3.228	82.00	95.90	426.59	6.46	1.13	D23770	4.370	111.00	79.92	355.49	5.37	0.94

FOR INFORMATION ON ALTERNATIVE FINISHES, SEE PAGE 311

Part Numbers with an "*" are squared and not ground. **Part Numbers in bold** represent the newly expanded Associated Spring RAYMOND compression spring offering.

MUSIC WIRE															STAINLESS STEEL					
Catalog #	Outside Diameter (OD)		Wire Diameter (d)		Free Length (L) Approx		Load Length (L_1)		Solid Height (Sh) Approx		Load (P) at L_1		Spring Rate (R)		Catalog #	Load Length (L_1)		Load (P) at L_1		Spring Rate (R)	
	in	mm	in	mm	in	mm	in	mm	in	mm	lb	N	lb/in	N/mm		in	mm	lb	N	lb/in	N/mm
D13930	2.165	55.00	0.197	5.00	3.346	85.00	1.217	30.90	1.083	27.50	176.37	784.53	82.91	14.51	D23930	1.217	30.90	146.97	653.78	69.09	12.09
D13940	2.165	55.00	0.197	5.00	5.118	130.00	1.701	43.20	1.476	37.50	176.37	784.53	52.86	9.25	D23940	1.701	43.20	146.97	653.78	44.06	7.71
D13950	2.165	55.00	0.197	5.00	7.677	195.00	2.425	61.60	2.067	52.50	176.37	784.53	34.17	5.98	D23950	2.425	61.60	146.97	653.78	28.46	4.98
D13960	2.165	55.00	0.197	5.00	11.024	280.00	3.390	86.10	2.854	72.50	176.37	784.53	23.26	4.07	D23960	3.390	86.10	146.97	653.78	19.37	3.39
D13970	2.165	55.00	0.197	5.00	16.142	410.00	4.843	123.00	4.035	102.50	176.37	784.53	15.71	2.75	D23970	4.843	123.00	146.97	653.78	13.09	2.29
C2174-177-3500-M	**2.174**	**55.22**	**0.177**	**4.50**	**3.500**	**88.90**	**1.433**	**36.40**	**1.122**	**28.49**	**90.73**	**403.59**	**43.90**	**7.68**	**C2174-177-3500-S**	**1.755**	**44.59**	**66.59**	**296.21**	**38.17**	**6.68**
C2174-177-3750-M	**2.174**	**55.22**	**0.177**	**4.50**	**3.750**	**95.25**	**1.519**	**38.58**	**1.181**	**30.01**	**90.73**	**403.59**	**40.67**	**7.12**	**C2174-177-3750-S**	**1.867**	**47.42**	**66.59**	**296.21**	**35.36**	**6.19**
C2174-177-4000-M	**2.174**	**55.22**	**0.177**	**4.50**	**4.000**	**101.60**	**1.605**	**40.76**	**1.241**	**31.52**	**90.73**	**403.59**	**37.88**	**6.63**	**C2174-177-4000-S**	**1.978**	**50.25**	**66.59**	**296.21**	**32.94**	**5.76**
C2174-177-4250-M	**2.174**	**55.22**	**0.177**	**4.50**	**4.250**	**107.95**	**1.690**	**42.93**	**1.301**	**33.03**	**90.73**	**403.59**	**35.45**	**6.20**	**C2174-177-4250-S**	**2.090**	**53.07**	**66.59**	**296.21**	**30.82**	**5.39**
C2174-177-4500-M	**2.174**	**55.22**	**0.177**	**4.50**	**4.500**	**114.30**	**1.776**	**45.11**	**1.360**	**34.55**	**90.73**	**403.59**	**33.31**	**5.83**	**C2174-177-4500-S**	**2.201**	**55.90**	**66.59**	**296.21**	**28.96**	**5.07**
C2174-177-4750-M	**2.174**	**55.22**	**0.177**	**4.50**	**4.750**	**120.65**	**1.862**	**47.29**	**1.420**	**36.06**	**90.73**	**403.59**	**31.42**	**5.50**	**C2174-177-4750-S**	**2.312**	**58.73**	**66.59**	**296.21**	**27.32**	**4.78**
C2174-177-5000-M	**2.174**	**55.22**	**0.177**	**4.50**	**5.000**	**127.00**	**1.948**	**49.47**	**1.479**	**37.58**	**90.73**	**403.59**	**29.72**	**5.20**	**C2174-177-5000-S**	**2.424**	**61.56**	**66.59**	**296.21**	**25.85**	**4.52**
C2174-177-5250-M	**2.174**	**55.22**	**0.177**	**4.50**	**5.250**	**133.35**	**2.033**	**51.65**	**1.539**	**39.09**	**90.73**	**403.59**	**28.21**	**4.94**	**C2174-177-5250-S**	**2.535**	**64.39**	**66.59**	**296.21**	**24.53**	**4.29**
C2174-177-5500-M	**2.174**	**55.22**	**0.177**	**4.50**	**5.500**	**139.70**	**2.119**	**53.83**	**1.599**	**40.60**	**90.73**	**403.59**	**26.84**	**4.70**	**C2174-177-5500-S**	**2.646**	**67.22**	**66.59**	**296.21**	**23.34**	**4.08**
C2174-177-5750-M	**2.174**	**55.22**	**0.177**	**4.50**	**5.750**	**146.05**	**2.205**	**56.00**	**1.658**	**42.12**	**90.73**	**403.59**	**25.59**	**4.48**	**C2174-177-5750-S**	**2.758**	**70.05**	**66.59**	**296.21**	**22.26**	**3.89**
C2174-177-6000-M	**2.174**	**55.22**	**0.177**	**4.50**	**6.000**	**152.40**	**2.291**	**58.18**	**1.718**	**43.63**	**90.73**	**403.59**	**24.46**	**4.28**	**C2174-177-6000-S**	**2.869**	**72.88**	**66.59**	**296.21**	**21.27**	**3.72**
C2174-177-6250-M	**2.174**	**55.22**	**0.177**	**4.50**	**6.250**	**158.75**	**2.376**	**60.36**	**1.777**	**45.15**	**90.73**	**403.59**	**23.42**	**4.10**	**C2174-177-6250-S**	**2.980**	**75.70**	**66.59**	**296.21**	**20.37**	**3.56**
C2174-177-6500-M	**2.174**	**55.22**	**0.177**	**4.50**	**6.500**	**165.10**	**2.462**	**62.54**	**1.837**	**46.66**	**90.73**	**403.59**	**22.47**	**3.93**	**C2174-177-6500-S**	**3.092**	**78.53**	**66.59**	**296.21**	**19.54**	**3.42**
C2174-177-6750-M	**2.174**	**55.22**	**0.177**	**4.50**	**6.750**	**171.45**	**2.548**	**64.72**	**1.897**	**48.17**	**90.73**	**403.59**	**21.59**	**3.78**	**C2174-177-6750-S**	**3.203**	**81.36**	**66.59**	**296.21**	**18.78**	**3.29**
C2174-177-7000-M	**2.174**	**55.22**	**0.177**	**4.50**	**7.000**	**177.80**	**2.634**	**66.89**	**1.956**	**49.69**	**90.73**	**403.59**	**20.78**	**3.64**	**C2174-177-7000-S**	**3.315**	**84.19**	**66.59**	**296.21**	**18.07**	**3.16**
C2174-177-7500-M	**2.174**	**55.22**	**0.177**	**4.50**	**7.500**	**190.50**	**2.805**	**71.25**	**2.075**	**52.72**	**90.73**	**403.59**	**19.33**	**3.38**	**C2174-177-7500-S**	**3.537**	**89.85**	**66.59**	**296.21**	**16.81**	**2.94**
C2174-177-8000-M	**2.174**	**55.22**	**0.177**	**4.50**	**8.000**	**203.20**	**2.977**	**75.61**	**2.195**	**55.74**	**90.73**	**403.59**	**18.06**	**3.16**	**C2174-177-8000-S**	**3.760**	**95.51**	**66.59**	**296.21**	**15.71**	**2.75**
C2174-177-8500-M	**2.174**	**55.22**	**0.177**	**4.50**	**8.500**	**215.90**	**3.148**	**79.96**	**2.314**	**58.77**	**90.73**	**403.59**	**16.95**	**2.97**	**C2174-177-8500-S**	**3.983**	**101.16**	**66.59**	**296.21**	**14.74**	**2.58**
C2174-177-9000-M	**2.174**	**55.22**	**0.177**	**4.50**	**9.000**	**228.60**	**3.320**	**84.32**	**2.433**	**61.80**	**90.73**	**403.59**	**15.97**	**2.80**	**C2174-177-9000-S**	**4.206**	**106.82**	**66.59**	**296.21**	**13.89**	**2.43**
C2174-177-9500-M	**2.174**	**55.22**	**0.177**	**4.50**	**9.500**	**241.30**	**3.491**	**88.67**	**2.552**	**64.83**	**90.73**	**403.59**	**15.10**	**2.64**	**C2174-177-9500-S**	**4.428**	**112.48**	**66.59**	**296.21**	**13.13**	**2.30**
C2174-192-3500-M	**2.174**	**55.22**	**0.192**	**4.88**	**3.500**	**88.90**	**1.552**	**39.43**	**1.269**	**32.23**	**113.79**	**506.16**	**58.42**	**10.22**	**C2174-192-3500-S**	**1.875**	**47.62**	**82.56**	**367.25**	**50.80**	**8.89**
C2174-192-3750-M	**2.174**	**55.22**	**0.192**	**4.88**	**3.750**	**95.25**	**1.646**	**41.81**	**1.338**	**34.00**	**113.79**	**506.16**	**54.08**	**9.46**	**C2174-192-3750-S**	**1.994**	**50.66**	**82.56**	**367.25**	**47.03**	**8.23**
C2174-192-4000-M	**2.174**	**55.22**	**0.192**	**4.88**	**4.000**	**101.60**	**1.740**	**44.19**	**1.408**	**35.76**	**113.79**	**506.16**	**50.34**	**8.81**	**C2174-192-4000-S**	**2.114**	**53.70**	**82.56**	**367.25**	**43.78**	**7.66**
C2174-192-4250-M	**2.174**	**55.22**	**0.192**	**4.88**	**4.250**	**107.95**	**1.833**	**46.57**	**1.477**	**37.53**	**113.79**	**506.16**	**47.09**	**8.24**	**C2174-192-4250-S**	**2.234**	**56.74**	**82.56**	**367.25**	**40.95**	**7.17**
C2174-192-4500-M	**2.174**	**55.22**	**0.192**	**4.88**	**4.500**	**114.30**	**1.927**	**48.95**	**1.547**	**39.29**	**113.79**	**506.16**	**44.23**	**7.74**	**C2174-192-4500-S**	**2.353**	**59.77**	**82.56**	**367.25**	**38.46**	**6.73**
C2174-192-4750-M	**2.174**	**55.22**	**0.192**	**4.88**	**4.750**	**120.65**	**2.021**	**51.33**	**1.616**	**41.05**	**113.79**	**506.16**	**41.70**	**7.30**	**C2174-192-4750-S**	**2.473**	**62.81**	**82.56**	**367.25**	**36.26**	**6.34**
C2174-192-5000-M	**2.174**	**55.22**	**0.192**	**4.88**	**5.000**	**127.00**	**2.115**	**53.71**	**1.686**	**42.82**	**113.79**	**506.16**	**39.44**	**6.90**	**C2174-192-5000-S**	**2.593**	**65.85**	**82.56**	**367.25**	**34.29**	**6.00**
C2174-192-5250-M	**2.174**	**55.22**	**0.192**	**4.88**	**5.250**	**133.35**	**2.208**	**56.09**	**1.755**	**44.58**	**113.79**	**506.16**	**37.41**	**6.55**	**C2174-192-5250-S**	**2.712**	**68.89**	**82.56**	**367.25**	**32.53**	**5.69**
C2174-192-5500-M	**2.174**	**55.22**	**0.192**	**4.88**	**5.500**	**139.70**	**2.302**	**58.47**	**1.825**	**46.35**	**113.79**	**506.16**	**35.58**	**6.23**	**C2174-192-5500-S**	**2.832**	**71.93**	**82.56**	**367.25**	**30.94**	**5.41**
C2174-192-5750-M	**2.174**	**55.22**	**0.192**	**4.88**	**5.750**	**146.05**	**2.396**	**60.86**	**1.894**	**48.11**	**113.79**	**506.16**	**33.93**	**5.94**	**C2174-192-5750-S**	**2.951**	**74.96**	**82.56**	**367.25**	**29.50**	**5.16**
C2174-192-6000-M	**2.174**	**55.22**	**0.192**	**4.88**	**6.000**	**152.40**	**2.490**	**63.24**	**1.964**	**49.88**	**113.79**	**506.16**	**32.42**	**5.67**	**C2174-192-6000-S**	**3.071**	**78.00**	**82.56**	**367.25**	**28.19**	**4.93**
C2174-192-6250-M	**2.174**	**55.22**	**0.192**	**4.88**	**6.250**	**158.75**	**2.583**	**65.62**	**2.033**	**51.64**	**113.79**	**506.16**	**31.03**	**5.43**	**C2174-192-6250-S**	**3.191**	**81.04**	**82.56**	**367.25**	**26.99**	**4.72**
C2174-192-6500-M	**2.174**	**55.22**	**0.192**	**4.88**	**6.500**	**165.10**	**2.677**	**68.00**	**2.103**	**53.40**	**113.79**	**506.16**	**29.77**	**5.21**	**C2174-192-6500-S**	**3.310**	**84.08**	**82.56**	**367.25**	**25.88**	**4.53**
C2174-192-6750-M	**2.174**	**55.22**	**0.192**	**4.88**	**6.750**	**171.45**	**2.771**	**70.38**	**2.172**	**55.17**	**113.79**	**506.16**	**28.60**	**5.00**	**C2174-192-6750-S**	**3.430**	**87.12**	**82.56**	**367.25**	**24.87**	**4.35**
C2174-192-7000-M	**2.174**	**55.22**	**0.192**	**4.88**	**7.000**	**177.80**	**2.865**	**72.76**	**2.241**	**56.93**	**113.79**	**506.16**	**27.52**	**4.82**	**C2174-192-7000-S**	**3.549**	**90.16**	**82.56**	**367.25**	**23.93**	**4.19**
C2174-192-7500-M	**2.174**	**55.22**	**0.192**	**4.88**	**7.500**	**190.50**	**3.052**	**77.52**	**2.380**	**60.46**	**113.79**	**506.16**	**25.58**	**4.48**	**C2174-192-7500-S**	**3.789**	**96.23**	**82.56**	**367.25**	**22.25**	**3.89**
C2174-192-8000-M*	**2.174**	**55.22**	**0.192**	**4.88**	**8.000**	**203.20**	**3.359**	**85.33**	**2.668**	**67.76**	**113.79**	**506.16**	**24.52**	**4.29**	**C2174-192-8000-S***	**4.128**	**104.85**	**82.56**	**367.25**	**21.32**	**3.73**
C2174-192-8500-M*	**2.174**	**55.22**	**0.192**	**4.88**	**8.500**	**215.90**	**3.547**	**90.09**	**2.807**	**71.29**	**113.79**	**506.16**	**22.97**	**4.02**	**C2174-192-8500-S***	**4.367**	**110.93**	**82.56**	**367.25**	**19.98**	**3.50**
C2174-192-9000-M*	**2.174**	**55.22**	**0.192**	**4.88**	**9.000**	**228.60**	**3.734**	**94.85**	**2.945**	**74.81**	**113.79**	**506.16**	**21.61**	**3.78**	**C2174-192-9000-S***	**4.606**	**117.00**	**82.56**	**367.25**	**18.79**	**3.29**
C2174-192-9500-M*	**2.174**	**55.22**	**0.192**	**4.88**	**9.500**	**241.30**	**3.922**	**99.62**	**3.084**	**78.34**	**113.79**	**506.16**	**20.40**	**3.57**	**C2174-192-9500-S***	**4.846**	**123.08**	**82.56**	**367.25**	**17.74**	**3.10**
C2174-207-3250-M	2.174	55.22	0.207	5.26	3.250	82.55	1.570	39.88	1.337	33.97	140.26	623.89	83.50	14.61	C2174-207-3250-S	1.864	47.35	100.61	447.52	72.61	12.71
C2174-207-3500-M	2.174	55.22	0.207	5.26	3.500	88.90	1.672	42.47	1.417	35.99	140.26	623.89	76.73	13.43	C2174-207-3500-S	1.992	50.60	100.61	447.52	66.72	11.68
C2174-207-3750-M	2.174	55.22	0.207	5.26	3.750	95.25	1.774	45.06	1.497	38.01	140.26	623.89	70.98	12.42	C2174-207-3750-S	2.120	53.85	100.61	447.52	61.72	10.80
C2174-207-4000-M	2.174	55.22	0.207	5.26	4.000	101.60	1.876	47.65	1.576	40.04	140.26	623.89	66.03	11.56	C2174-207-4000-S	2.248	57.10	100.61	447.52	57.42	10.05
C2174-207-4250-M	2.174	55.22	0.207	5.26	4.250	107.95	1.978	50.24	1.656	42.06	140.26	623.89	61.73	10.80	C2174-207-4250-S	2.376	60.34	100.61	447.52	53.68	9.39
C2174-207-4500-M	2.174	55.22	0.207	5.26	4.500	114.30	2.080	52.83	1.735	44.08	140.26	623.89	57.95	10.14	C2174-207-4500-S	2.504	63.59	100.61	447.52	50.39	8.82
C2174-207-4750-M	2.174	55.22	0.207	5.26	4.750	120.65	2.182	55.42	1.815	46.10	140.26	623.89	54.61	9.56	C2174-207-4750-S	2.631	66.84	100.61	447.52	47.49	8.31
C2174-207-5000-M	2.174	55.22	0.207	5.26	5.000	127.00	2.284	58.00	1.895	48.12	140.26	623.89	51.63	9.04	C2174-207-5000-S	2.759	70.09	100.61	447.52	44.90	7.86
C2174-207-5250-M	2.174	55.22	0.207	5.26	5.250	133.35	2.386	60.59	1.974	50.14	140.26	623.89	48.97	8.57	C2174-207-5250-S	2.887	73.33	100.61	447.52	42.58	7.45
C2174-207-5500-M	2.174	55.22	0.207	5.26	5.500	139.70	2.488	63.18	2.054	52.16	140.26	623.89	46.56	8.15	C2174-207-5500-S	3.015	76.58	100.61	447.52	40.49	7.08
C2174-207-5750-M	2.174	55.22	0.207	5.26	5.750	146.05	2.589	65.77	2.133	54.18	140.26	623.89	44.38	7.77	C2174-207-5750-S	3.143	79.83	100.61	447.52	38.59	6.75
C2174-207-6000-M	2.174	55.22	0.207	5.26	6.000	152.40	2.691	68.36	2.213	56.21	140.26	623.89	42.39	7.42	C2174-207-6000-S	3.271	83.07	100.61	447.52	36.86	6.45
C2174-207-6250-M	2.174	55.22	0.207	5.26	6.250	158.75	2.793	70.95	2.292	58.23	140.26	623.89	40.58	7.10	C2174-207-6250-S	3.399	86.32	100.61	447.52	35.28	6.17
C2174-207-6500-M	2.174	55.22	0.207	5.26	6.500	165.10	2.895	73.54	2.372	60.25	140.26	623.89	38.91	6.81	C2174-207-6500-S	3.526	89.57	100.61	447.52	33.83	5.92
C2174-207-6750-M	2.174	55.22	0.207	5.26	6.750	171.45	2.997	76.13	2.452	62.27	140.26	623.89	37.37	6.54	C2174-207-6750-S	3.654	92.82	100.61	447.52	32.50	5.69
C2174-207-7000-M*	2.174	55.22	0.207	5.26	7.000	177.80	3.222	81.83	2.683	68.14	140.26	623.89	37.12	6.50	C2174-207-7000-S*	3.883	98.63	100.61	447.52	32.28	5.65
C2174-207-7500-M*	2.174	55.22	0.207	5.26	7.500	190.50	3.425	87.01	2.842	72.18	140.26	623.89	34.42	6.02	C2174-207-7500-S*	4.139	105.13	100.61	447.52	29.93	5.24
C2174-207-8000-M*	2.174	55.22	0.207	5.26	8.000	203.20	3.629	92.19	3.001	76.22	140.26	623.89	32.09	5.62	C2174-207-8000-S*	4.395	111.62	100.61	447.52	27.91	4.88
C2174-207-8500-M*	2.174	55.22	0.207	5.26	8.500	215.90	3.833	97.36	3.160	80.27	140.26	623.89	30.05	5.26	C2174-207-8500-S*	4.650	118.12	100.61	447.52	26.13	4.57

Part Numbers with an "*" are squared and not ground. **Part Numbers in bold** represent the newly expanded Associated Spring RAYMOND compression spring offering.

MUSIC WIRE															STAINLESS STEEL					
Catalog #	Outside Diameter (OD)		Wire Diameter (d)		Free Length (L) Approx		Load Length (L_1)		Solid Height (Sh) Approx		Load (P) at L_1		Spring Rate (R)		Catalog #	Load Length (L_1)		Load (P) at L_1		Spring Rate (R)	
	in	mm	in	mm	in	mm	in	mm	in	mm	lb	N	lb/in	N/mm		in	mm	lb	N	lb/in	N/mm
C2174-207-9000-M*	2.174	55.22	0.207	5.26	9.000	228.60	4.037	102.54	3.319	84.31	140.26	623.89	28.26	4.95	**C2174-207-9000-S***	4.906	124.61	100.61	447.52	24.57	4.30
C2174-207-9500-M*	2.174	55.22	0.207	5.26	9.500	241.30	4.241	107.72	3.478	88.35	140.26	623.89	26.67	4.67	**C2174-207-9500-S***	5.162	131.11	100.61	447.52	23.19	4.06
C2174-225-3250-M	2.174	55.22	0.225	5.72	3.250	82.55	1.703	43.25	1.501	38.14	176.77	786.31	114.26	20.00	**C2174-225-3250-S**	1.991	50.57	125.09	556.44	99.36	17.39
C2174-225-3500-M	2.174	55.22	0.225	5.72	3.500	88.90	1.815	46.10	1.593	40.47	176.77	786.31	104.90	18.36	**C2174-225-3500-S**	2.129	54.07	125.09	556.44	91.21	15.96
C2174-225-3750-M	2.174	55.22	0.225	5.72	3.750	95.25	1.927	48.94	1.685	42.80	176.77	786.31	96.95	16.97	**C2174-225-3750-S**	2.266	57.56	125.09	556.44	84.30	14.75
C2174-225-4000-M	2.174	55.22	0.225	5.72	4.000	101.60	2.039	51.78	1.777	45.14	176.77	786.31	90.12	15.77	**C2174-225-4000-S**	2.404	61.06	125.09	556.44	78.37	13.71
C2174-225-4250-M	2.174	55.22	0.225	5.72	4.250	107.95	2.150	54.62	1.869	47.47	176.77	786.31	84.19	14.73	**C2174-225-4250-S**	2.541	64.55	125.09	556.44	73.21	12.81
C2174-225-4500-M	2.174	55.22	0.225	5.72	4.500	114.30	2.262	57.46	1.961	49.80	176.77	786.31	79.00	13.82	**C2174-225-4500-S**	2.679	68.04	125.09	556.44	68.69	12.02
C2174-225-4750-M	2.174	55.22	0.225	5.72	4.750	120.65	2.374	60.30	2.053	52.14	176.77	786.31	74.40	13.02	**C2174-225-4750-S**	2.817	71.54	125.09	556.44	64.70	11.32
C2174-225-5000-M	2.174	55.22	0.225	5.72	5.000	127.00	2.486	63.14	2.144	54.47	176.77	786.31	70.31	12.30	**C2174-225-5000-S**	2.954	75.03	125.09	556.44	61.14	10.70
C2174-225-5250-M	2.174	55.22	0.225	5.72	5.250	133.35	2.598	65.99	2.236	56.80	176.77	786.31	66.65	11.66	**C2174-225-5250-S**	3.092	78.53	125.09	556.44	57.96	10.14
C2174-225-5500-M	2.174	55.22	0.225	5.72	5.500	139.70	2.710	68.83	2.328	59.14	176.77	786.31	63.35	11.09	**C2174-225-5500-S**	3.229	82.02	125.09	556.44	55.09	9.64
C2174-225-5750-M	2.174	55.22	0.225	5.72	5.750	146.05	2.822	71.67	2.420	61.47	176.77	786.31	60.36	10.56	**C2174-225-5750-S**	3.367	85.52	125.09	556.44	52.49	9.19
C2174-225-6000-M	2.174	55.22	0.225	5.72	6.000	152.40	2.933	74.51	2.512	63.80	176.77	786.31	57.65	10.09	**C2174-225-6000-S**	3.504	89.01	125.09	556.44	50.13	8.77
C2174-225-6250-M	2.174	55.22	0.225	5.72	6.250	158.75	3.045	77.35	2.604	66.14	176.77	786.31	55.16	9.65	**C2174-225-6250-S**	3.642	92.51	125.09	556.44	47.97	8.39
C2174-225-6500-M	2.174	55.22	0.225	5.72	6.500	165.10	3.157	80.19	2.696	68.47	176.77	786.31	52.88	9.25	**C2174-225-6500-S**	3.780	96.00	125.09	556.44	45.98	8.05
C2174-225-6750-M	2.174	55.22	0.225	5.72	6.750	171.45	3.269	83.03	2.788	70.80	176.77	786.31	50.78	8.89	**C2174-225-6750-S**	3.917	99.50	125.09	556.44	44.16	7.73
C2174-225-7000-M*	2.174	55.22	0.225	5.72	7.000	177.80	3.505	89.03	3.033	77.04	176.77	786.31	50.58	8.85	**C2174-225-7000-S***	4.156	105.56	125.09	556.44	43.98	7.70
C2174-225-7500-M*	2.174	55.22	0.225	5.72	7.500	190.50	3.729	94.72	3.217	81.70	176.77	786.31	46.88	8.20	**C2174-225-7500-S***	4.431	112.55	125.09	556.44	40.76	7.13
C2174-225-8000-M*	2.174	55.22	0.225	5.72	8.000	203.20	3.953	100.40	3.400	86.37	176.77	786.31	43.68	7.64	**C2174-225-8000-S***	4.706	119.54	125.09	556.44	37.98	6.65
C2174-225-8500-M*	2.174	55.22	0.225	5.72	8.500	215.90	4.176	106.08	3.584	91.04	176.77	786.31	40.89	7.16	**C2174-225-8500-S***	4.981	126.53	125.09	556.44	35.55	6.22
C2174-225-9000-M*	2.174	55.22	0.225	5.72	9.000	228.60	4.400	111.77	3.768	95.71	176.77	786.31	38.43	6.73	**C2174-225-9000-S***	5.257	133.52	125.09	556.44	33.42	5.85
C2174-225-9500-M*	2.174	55.22	0.225	5.72	9.500	241.30	4.624	117.45	3.952	100.37	176.77	786.31	36.25	6.34	**C2174-225-9500-S***	5.532	140.51	125.09	556.44	31.52	5.52
C2174-250-3000-M	2.174	55.22	0.250	6.35	3.000	76.20	1.756	44.60	1.613	40.97	236.63	1052.58	190.20	33.28	**C2174-250-3000-S**	2.006	50.95	164.38	731.22	165.39	28.94
C2174-250-3250-M	2.174	55.22	0.250	6.35	3.250	82.55	1.881	47.79	1.722	43.74	236.63	1052.58	172.91	30.26	**C2174-250-3250-S**	2.157	54.78	164.38	731.22	150.35	26.31
C2174-250-3500-M	2.174	55.22	0.250	6.35	3.500	88.90	2.007	50.98	1.831	46.50	236.63	1052.58	158.50	27.74	**C2174-250-3500-S**	2.307	58.60	164.38	731.22	137.82	24.12
C2174-250-3750-M	2.174	55.22	0.250	6.35	3.750	95.25	2.133	54.17	1.940	49.27	236.63	1052.58	146.31	25.60	**C2174-250-3750-S**	2.458	62.43	164.38	731.22	127.22	22.26
C2174-250-4000-M	2.174	55.22	0.250	6.35	4.000	101.60	2.258	57.36	2.048	52.03	236.63	1052.58	135.85	23.77	**C2174-250-4000-S**	2.608	66.26	164.38	731.22	118.13	20.67
C2174-250-4250-M	2.174	55.22	0.250	6.35	4.250	107.95	2.384	60.55	2.157	54.79	236.63	1052.58	126.80	22.19	**C2174-250-4250-S**	2.759	70.08	164.38	731.22	110.26	19.30
C2174-250-4500-M	2.174	55.22	0.250	6.35	4.500	114.30	2.509	63.74	2.266	57.56	236.63	1052.58	118.87	20.80	**C2174-250-4500-S**	2.910	73.91	164.38	731.22	103.37	18.09
C2174-250-4750-M	2.174	55.22	0.250	6.35	4.750	120.65	2.635	66.93	2.375	60.32	236.63	1052.58	111.88	19.58	**C2174-250-4750-S**	3.060	77.73	164.38	731.22	97.29	17.03
C2174-250-5000-M	2.174	55.22	0.250	6.35	5.000	127.00	2.761	70.12	2.484	63.08	236.63	1052.58	105.66	18.49	**C2174-250-5000-S**	3.211	81.56	164.38	731.22	91.88	16.08
C2174-250-5250-M	2.174	55.22	0.250	6.35	5.250	133.35	2.886	73.31	2.592	65.85	236.63	1052.58	100.10	17.52	**C2174-250-5250-S**	3.362	85.38	164.38	731.22	87.05	15.23
C2174-250-5500-M	2.174	55.22	0.250	6.35	5.500	139.70	3.012	76.50	2.701	68.61	236.63	1052.58	95.10	16.64	**C2174-250-5500-S**	3.512	89.21	164.38	731.22	82.69	14.47
C2174-250-5750-M	2.174	55.22	0.250	6.35	5.750	146.05	3.137	79.69	2.810	71.38	236.63	1052.58	90.57	15.85	**C2174-250-5750-S**	3.663	93.03	164.38	731.22	78.76	13.78
C2174-250-6000-M	2.174	55.22	0.250	6.35	6.000	152.40	3.263	82.88	2.919	74.14	236.63	1052.58	86.45	15.13	**C2174-250-6000-S**	3.813	96.86	164.38	731.22	75.18	13.16
C2174-250-6250-M	2.174	55.22	0.250	6.35	6.250	158.75	3.388	86.07	3.028	76.90	236.63	1052.58	82.69	14.47	**C2174-250-6250-S**	3.964	100.68	164.38	731.22	71.91	12.58
C2174-250-6500-M	2.174	55.22	0.250	6.35	6.500	165.10	3.514	89.26	3.137	79.67	236.63	1052.58	79.25	13.87	**C2174-250-6500-S**	4.115	104.51	164.38	731.22	68.91	12.06
C2174-250-6750-M	2.174	55.22	0.250	6.35	6.750	171.45	3.640	92.45	3.245	82.43	236.63	1052.58	76.08	13.31	**C2174-250-6750-S**	4.265	108.34	164.38	731.22	66.16	11.58
C2174-250-7000-M	2.174	55.22	0.250	6.35	7.000	177.80	3.765	95.64	3.354	85.20	236.63	1052.58	73.15	12.80	**C2174-250-7000-S**	4.416	112.16	164.38	731.22	63.61	11.13
C2174-250-7500-M	2.174	55.22	0.250	6.35	7.500	190.50	4.016	102.02	3.572	90.72	236.63	1052.58	67.93	11.89	**C2174-250-7500-S**	4.717	119.81	164.38	731.22	59.07	10.34
C2174-250-8000-M	2.174	55.22	0.250	6.35	8.000	203.20	4.268	108.40	3.789	96.25	236.63	1052.58	63.40	11.09	**C2174-250-8000-S**	5.018	127.46	164.38	731.22	55.13	9.65
C2174-250-8500-M	2.174	55.22	0.250	6.35	8.500	215.90	4.519	114.78	4.007	101.78	236.63	1052.58	59.44	10.40	**C2174-250-8500-S**	5.319	135.11	164.38	731.22	51.68	9.04
C2174-250-9000-M*	2.174	55.22	0.250	6.35	9.000	228.60	4.894	124.32	4.378	111.21	236.63	1052.58	57.64	10.09	**C2174-250-9000-S***	5.720	145.29	164.38	731.22	50.12	8.77
C2174-250-9500-M*	2.174	55.22	0.250	6.35	9.500	241.30	5.146	130.70	4.596	116.74	236.63	1052.58	54.34	9.51	**C2174-250-9500-S***	6.021	152.94	164.38	731.22	47.25	8.27
C2233-177-3750-M	2.233	56.72	0.177	4.50	3.750	95.25	1.488	37.80	1.143	29.04	88.43	393.35	39.10	6.84	**C2233-177-3750-S**	1.841	46.76	64.90	288.70	34.00	5.95
C2233-177-4000-M	2.233	56.72	0.177	4.50	4.000	101.60	1.572	39.92	1.200	30.49	88.43	393.35	36.42	6.37	**C2233-177-4000-S**	1.950	49.54	64.90	288.70	31.67	5.54
C2233-177-4250-M	2.233	56.72	0.177	4.50	4.250	107.95	1.655	42.04	1.257	31.93	88.43	393.35	34.08	5.96	**C2233-177-4250-S**	2.060	52.32	64.90	288.70	29.63	5.19
C2233-177-4500-M	2.233	56.72	0.177	4.50	4.500	114.30	1.739	44.16	1.314	33.37	88.43	393.35	32.02	5.60	**C2233-177-4500-S**	2.169	55.10	64.90	288.70	27.85	4.87
C2233-177-4750-M	2.233	56.72	0.177	4.50	4.750	120.65	1.822	46.28	1.371	34.82	88.43	393.35	30.20	5.29	**C2233-177-4750-S**	2.279	57.88	64.90	288.70	26.26	4.60
C2233-177-5000-M	2.233	56.72	0.177	4.50	5.000	127.00	1.906	48.40	1.427	36.26	88.43	393.35	28.58	5.00	**C2233-177-5000-S**	2.388	60.66	64.90	288.70	24.85	4.35
C2233-177-5250-M	2.233	56.72	0.177	4.50	5.250	133.35	1.989	50.52	1.484	37.70	88.43	393.35	27.12	4.75	**C2233-177-5250-S**	2.498	63.44	64.90	288.70	23.58	4.13
C2233-177-5500-M	2.233	56.72	0.177	4.50	5.500	139.70	2.073	52.64	1.541	39.14	88.43	393.35	25.80	4.52	**C2233-177-5500-S**	2.607	66.22	64.90	288.70	22.44	3.93
C2233-177-5750-M	2.233	56.72	0.177	4.50	5.750	146.05	2.156	54.76	1.598	40.59	88.43	393.35	24.61	4.31	**C2233-177-5750-S**	2.717	69.00	64.90	288.70	21.40	3.74
C2233-177-6000-M	2.233	56.72	0.177	4.50	6.000	152.40	2.240	56.88	1.655	42.03	88.43	393.35	23.52	4.12	**C2233-177-6000-S**	2.826	71.78	64.90	288.70	20.45	3.58
C2233-177-6250-M	2.233	56.72	0.177	4.50	6.250	158.75	2.323	59.01	1.712	43.47	88.43	393.35	22.52	3.94	**C2233-177-6250-S**	2.935	74.56	64.90	288.70	19.58	3.43
C2233-177-6500-M	2.233	56.72	0.177	4.50	6.500	165.10	2.407	61.13	1.768	44.92	88.43	393.35	21.60	3.78	**C2233-177-6500-S**	3.045	77.34	64.90	288.70	18.79	3.29
C2233-177-6750-M	2.233	56.72	0.177	4.50	6.750	171.45	2.490	63.25	1.825	46.36	88.43	393.35	20.76	3.63	**C2233-177-6750-S**	3.154	80.12	64.90	288.70	18.05	3.16
C2233-177-7000-M	2.233	56.72	0.177	4.50	7.000	177.80	2.574	65.37	1.882	47.80	88.43	393.35	19.98	3.50	**C2233-177-7000-S**	3.264	82.90	64.90	288.70	17.37	3.04
C2233-177-7500-M	2.233	56.72	0.177	4.50	7.500	190.50	2.740	69.61	1.996	50.69	88.43	393.35	18.58	3.25	**C2233-177-7500-S**	3.483	88.46	64.90	288.70	16.16	2.83
C2233-177-8000-M	2.233	56.72	0.177	4.50	8.000	203.20	2.907	73.85	2.109	53.57	88.43	393.35	17.36	3.04	**C2233-177-8000-S**	3.702	94.02	64.90	288.70	15.10	2.64
C2233-177-8500-M	2.233	56.72	0.177	4.50	8.500	215.90	3.074	78.09	2.223	56.46	88.43	393.35	16.30	2.85	**C2233-177-8500-S**	3.921	99.58	64.90	288.70	14.17	2.48
C2233-177-9000-M	2.233	56.72	0.177	4.50	9.000	228.60	3.241	82.33	2.336	59.35	88.43	393.35	15.36	2.69	**C2233-177-9000-S**	4.140	105.14	64.90	288.70	13.35	2.34
C2233-177-9500-M	2.233	56.72	0.177	4.50	9.500	241.30	3.408	86.57	2.450	62.23	88.43	393.35	14.52	2.54	**C2233-177-9500-S**	4.358	110.70	64.90	288.70	12.62	2.21

FOR INFORMATION ON ALTERNATIVE FINISHES, SEE PAGE 311

Part Numbers with an "*" are squared and not ground. **Part Numbers in bold** represent the newly expanded Associated Spring RAYMOND compression spring offering.

MUSIC WIRE																STAINLESS STEEL						
Catalog #	Outside Diameter (OD)		Wire Diameter (d)		Free Length (L) Approx		Load Length (L_1)		Solid Height (Sh) Approx		Load (P) at L_1		Spring Rate (R)		Catalog #	Load Length (L_1)		Load (P) at L_1		Spring Rate (R)	
	in	mm	in	mm	in	mm	in	mm	in	mm	lb	N	lb/in	N/mm		in	mm	lb	N	lb/in	N/mm
C2233-192-3500-M	2.233	56.72	0.192	4.88	3.500	88.90	1.521	38.62	1.230	31.24	110.92	493.39	56.04	9.81	**C2233-192-3500-S**	1.848	46.95	80.48	357.98	48.73	8.53
C2233-192-3750-M	2.233	56.72	0.192	4.88	3.750	95.25	1.612	40.94	1.296	32.92	110.92	493.39	51.87	9.08	**C2233-192-3750-S**	1.966	49.93	80.48	357.98	45.11	7.89
C2233-192-4000-M	2.233	56.72	0.192	4.88	4.000	101.60	1.703	43.25	1.362	34.61	110.92	493.39	48.29	8.45	**C2233-192-4000-S**	2.083	52.92	80.48	357.98	41.99	7.35
C2233-192-4250-M	2.233	56.72	0.192	4.88	4.250	107.95	1.794	45.57	1.429	36.29	110.92	493.39	45.17	7.90	**C2233-192-4250-S**	2.201	55.90	80.48	357.98	39.27	6.87
C2233-192-4500-M	2.233	56.72	0.192	4.88	4.500	114.30	1.885	47.89	1.495	37.98	110.92	493.39	42.42	7.42	**C2233-192-4500-S**	2.318	58.89	80.48	357.98	36.89	6.46
C2233-192-4750-M	2.233	56.72	0.192	4.88	4.750	120.65	1.977	50.20	1.561	39.66	110.92	493.39	39.99	7.00	**C2233-192-4750-S**	2.436	61.87	80.48	357.98	34.78	6.09
C2233-192-5000-M	2.233	56.72	0.192	4.88	5.000	127.00	2.068	52.52	1.628	41.34	110.92	493.39	37.83	6.62	**C2233-192-5000-S**	2.553	64.85	80.48	357.98	32.89	5.76
C2233-192-5250-M	2.233	56.72	0.192	4.88	5.250	133.35	2.159	54.84	1.694	43.03	110.92	493.39	35.88	6.28	**C2233-192-5250-S**	2.671	67.84	80.48	357.98	31.20	5.46
C2233-192-5500-M	2.233	56.72	0.192	4.88	5.500	139.70	2.250	57.15	1.760	44.71	110.92	493.39	34.13	5.97	**C2233-192-5500-S**	2.788	70.82	80.48	357.98	29.68	5.19
C2233-192-5750-M	2.233	56.72	0.192	4.88	5.750	146.05	2.341	59.47	1.827	46.40	110.92	493.39	32.54	5.69	**C2233-192-5750-S**	2.906	73.81	80.48	357.98	28.30	4.95
C2233-192-6000-M	2.233	56.72	0.192	4.88	6.000	152.40	2.432	61.78	1.893	48.08	110.92	493.39	31.09	5.44	**C2233-192-6000-S**	3.023	76.79	80.48	357.98	27.04	4.73
C2233-192-6250-M	2.233	56.72	0.192	4.88	6.250	158.75	2.524	64.10	1.959	49.77	110.92	493.39	29.77	5.21	**C2233-192-6250-S**	3.141	79.78	80.48	357.98	25.88	4.53
C2233-192-6500-M	2.233	56.72	0.192	4.88	6.500	165.10	2.615	66.42	2.026	51.45	110.92	493.39	28.55	5.00	**C2233-192-6500-S**	3.258	82.76	80.48	357.98	24.83	4.34
C2233-192-6750-M	2.233	56.72	0.192	4.88	6.750	171.45	2.706	68.73	2.092	53.14	110.92	493.39	27.43	4.80	**C2233-192-6750-S**	3.376	85.74	80.48	357.98	23.85	4.17
C2233-192-7000-M	2.233	56.72	0.192	4.88	7.000	177.80	2.797	71.05	2.158	54.82	110.92	493.39	26.39	4.62	**C2233-192-7000-S**	3.493	88.73	80.48	357.98	22.95	4.02
C2233-192-7500-M	2.233	56.72	0.192	4.88	7.500	190.50	2.980	75.68	2.291	58.19	110.92	493.39	24.54	4.29	**C2233-192-7500-S**	3.728	94.70	80.48	357.98	21.34	3.73
C2233-192-8000-M	2.233	56.72	0.192	4.88	8.000	203.20	3.162	80.31	2.424	61.56	110.92	493.39	22.93	4.01	**C2233-192-8000-S**	3.963	100.67	80.48	357.98	19.94	3.49
C2233-192-8500-M	2.233	56.72	0.192	4.88	8.500	215.90	3.344	84.95	2.556	64.93	110.92	493.39	21.51	3.76	**C2233-192-8500-S**	4.198	106.63	80.48	357.98	18.71	3.27
C2233-192-9000-M*	2.233	56.72	0.192	4.88	9.000	228.60	3.649	92.68	2.840	72.12	110.92	493.39	20.73	3.63	**C2233-192-9000-S***	4.535	115.19	80.48	357.98	18.02	3.15
C2233-192-9500-M*	2.233	56.72	0.192	4.88	9.500	241.30	3.831	97.31	2.972	75.49	110.92	493.39	19.57	3.42	**C2233-192-9500-S***	4.770	121.16	80.48	357.98	17.01	2.98
C2233-207-3500-M	2.233	56.72	0.207	5.26	3.500	88.90	1.638	41.59	1.374	34.91	136.73	608.22	73.42	12.85	**C2233-207-3500-S**	1.964	49.88	98.08	436.29	63.84	11.17
C2233-207-3750-M	2.233	56.72	0.207	5.26	3.750	95.25	1.737	44.11	1.450	36.84	136.73	608.22	67.91	11.88	**C2233-207-3750-S**	2.089	53.06	98.08	436.29	59.06	10.33
C2233-207-4000-M	2.233	56.72	0.207	5.26	4.000	101.60	1.836	46.63	1.527	38.77	136.73	608.22	63.18	11.06	**C2233-207-4000-S**	2.215	56.25	98.08	436.29	54.94	9.61
C2233-207-4250-M	2.233	56.72	0.207	5.26	4.250	107.95	1.935	49.15	1.603	40.71	136.73	608.22	59.06	10.34	**C2233-207-4250-S**	2.340	59.44	98.08	436.29	51.36	8.99
C2233-207-4500-M	2.233	56.72	0.207	5.26	4.500	114.30	2.034	51.66	1.679	42.64	136.73	608.22	55.45	9.70	**C2233-207-4500-S**	2.466	62.63	98.08	436.29	48.22	8.44
C2233-207-4750-M	2.233	56.72	0.207	5.26	4.750	120.65	2.133	54.18	1.755	44.57	136.73	608.22	52.25	9.14	**C2233-207-4750-S**	2.591	65.82	98.08	436.29	45.44	7.95
C2233-207-5000-M	2.233	56.72	0.207	5.26	5.000	127.00	2.232	56.70	1.831	46.51	136.73	608.22	49.40	8.65	**C2233-207-5000-S**	2.717	69.01	98.08	436.29	42.96	7.52
C2233-207-5250-M	2.233	56.72	0.207	5.26	5.250	133.35	2.331	59.22	1.907	48.44	136.73	608.22	46.85	8.20	**C2233-207-5250-S**	2.842	72.20	98.08	436.29	40.74	7.13
C2233-207-5500-M	2.233	56.72	0.207	5.26	5.500	139.70	2.430	61.73	1.983	50.37	136.73	608.22	44.55	7.80	**C2233-207-5500-S**	2.968	75.39	98.08	436.29	38.74	6.78
C2233-207-5750-M	2.233	56.72	0.207	5.26	5.750	146.05	2.530	64.25	2.059	52.31	136.73	608.22	42.46	7.43	**C2233-207-5750-S**	3.093	78.57	98.08	436.29	36.92	6.46
C2233-207-6000-M	2.233	56.72	0.207	5.26	6.000	152.40	2.629	66.77	2.135	54.24	136.73	608.22	40.56	7.10	**C2233-207-6000-S**	3.219	81.76	98.08	436.29	35.27	6.17
C2233-207-6250-M	2.233	56.72	0.207	5.26	6.250	158.75	2.728	69.29	2.212	56.17	136.73	608.22	38.82	6.79	**C2233-207-6250-S**	3.345	84.95	98.08	436.29	33.76	5.91
C2233-207-6500-M	2.233	56.72	0.207	5.26	6.500	165.10	2.827	71.80	2.288	58.11	136.73	608.22	37.23	6.51	**C2233-207-6500-S**	3.470	88.14	98.08	436.29	32.37	5.66
C2233-207-6750-M	2.233	56.72	0.207	5.26	6.750	171.45	2.926	74.32	2.364	60.04	136.73	608.22	35.76	6.26	**C2233-207-6750-S**	3.596	91.33	98.08	436.29	31.09	5.44
C2233-207-7000-M	2.233	56.72	0.207	5.26	7.000	177.80	3.025	76.84	2.440	61.97	136.73	608.22	34.40	6.02	**C2233-207-7000-S**	3.721	94.52	98.08	436.29	29.91	5.23
C2233-207-7500-M*	2.233	56.72	0.207	5.26	7.500	190.50	3.348	85.05	2.747	69.76	136.73	608.22	32.94	5.76	**C2233-207-7500-S***	4.075	103.51	98.08	436.29	28.64	5.01
C2233-207-8000-M*	2.233	56.72	0.207	5.26	8.000	203.20	3.547	90.08	2.899	73.63	136.73	608.22	30.70	5.37	**C2233-207-8000-S***	4.326	109.89	98.08	436.29	26.70	4.67
C2233-207-8500-M*	2.233	56.72	0.207	5.26	8.500	215.90	3.745	95.12	3.051	77.49	136.73	608.22	28.76	5.03	**C2233-207-8500-S***	4.577	116.27	98.08	436.29	25.00	4.38
C2233-207-9000-M*	2.233	56.72	0.207	5.26	9.000	228.60	3.943	100.15	3.203	81.36	136.73	608.22	27.04	4.73	**C2233-207-9000-S***	4.828	122.64	98.08	436.29	23.51	4.11
C2233-207-9500-M*	2.233	56.72	0.207	5.26	9.500	241.30	4.141	105.19	3.355	85.23	136.73	608.22	25.52	4.47	**C2233-207-9500-S***	5.080	129.02	98.08	436.29	22.19	3.88
C2233-225-3250-M	2.233	56.72	0.225	5.72	3.250	82.55	1.669	42.38	1.459	37.06	172.36	766.70	108.99	19.07	**C2233-225-3250-S**	1.963	49.86	121.97	542.56	94.77	16.58
C2233-225-3500-M	2.233	56.72	0.225	5.72	3.500	88.90	1.777	45.14	1.547	39.29	172.36	766.70	100.05	17.51	**C2233-225-3500-S**	2.098	53.29	121.97	542.56	87.00	15.23
C2233-225-3750-M	2.233	56.72	0.225	5.72	3.750	95.25	1.886	47.91	1.635	41.53	172.36	766.70	92.47	16.18	**C2233-225-3750-S**	2.233	56.72	121.97	542.56	80.41	14.07
C2233-225-4000-M	2.233	56.72	0.225	5.72	4.000	101.60	1.995	50.67	1.723	43.77	172.36	766.70	85.96	15.04	**C2233-225-4000-S**	2.368	60.15	121.97	542.56	74.75	13.08
C2233-225-4250-M	2.233	56.72	0.225	5.72	4.250	107.95	2.104	53.43	1.811	46.00	172.36	766.70	80.31	14.05	**C2233-225-4250-S**	2.503	63.58	121.97	542.56	69.83	12.22
C2233-225-4500-M	2.233	56.72	0.225	5.72	4.500	114.30	2.212	56.20	1.899	48.24	172.36	766.70	75.35	13.19	**C2233-225-4500-S**	2.638	67.02	121.97	542.56	65.52	11.47
C2233-225-4750-M	2.233	56.72	0.225	5.72	4.750	120.65	2.321	58.96	1.987	50.48	172.36	766.70	70.97	12.42	**C2233-225-4750-S**	2.773	70.45	121.97	542.56	61.71	10.80
C2233-225-5000-M	2.233	56.72	0.225	5.72	5.000	127.00	2.430	61.72	2.075	52.71	172.36	766.70	67.07	11.74	**C2233-225-5000-S**	2.909	73.88	121.97	542.56	58.32	10.21
C2233-225-5250-M	2.233	56.72	0.225	5.72	5.250	133.35	2.539	64.49	2.163	54.95	172.36	766.70	63.58	11.13	**C2233-225-5250-S**	3.044	77.31	121.97	542.56	55.28	9.67
C2233-225-5500-M	2.233	56.72	0.225	5.72	5.500	139.70	2.648	67.25	2.252	57.19	172.36	766.70	60.43	10.57	**C2233-225-5500-S**	3.179	80.74	121.97	542.56	52.55	9.20
C2233-225-5750-M	2.233	56.72	0.225	5.72	5.750	146.05	2.756	70.01	2.340	59.43	172.36	766.70	57.58	10.08	**C2233-225-5750-S**	3.314	84.17	121.97	542.56	50.07	8.76
C2233-225-6000-M	2.233	56.72	0.225	5.72	6.000	152.40	2.865	72.78	2.428	61.66	172.36	766.70	54.98	9.62	**C2233-225-6000-S**	3.449	87.60	121.97	542.56	47.81	8.37
C2233-225-6250-M	2.233	56.72	0.225	5.72	6.250	158.75	2.974	75.54	2.516	63.90	172.36	766.70	52.61	9.21	**C2233-225-6250-S**	3.584	91.03	121.97	542.56	45.75	8.01
C2233-225-6500-M	2.233	56.72	0.225	5.72	6.500	165.10	3.083	78.30	2.604	66.14	172.36	766.70	50.44	8.83	**C2233-225-6500-S**	3.719	94.46	121.97	542.56	43.86	7.68
C2233-225-6750-M*	2.233	56.72	0.225	5.72	6.750	171.45	3.319	84.30	2.849	72.36	172.36	766.70	50.23	8.79	**C2233-225-6750-S***	3.958	100.52	121.97	542.56	43.68	7.64
C2233-225-7000-M*	2.233	56.72	0.225	5.72	7.000	177.80	3.428	87.06	2.937	74.60	172.36	766.70	48.25	8.44	**C2233-225-7000-S***	4.093	103.95	121.97	542.56	41.95	7.34
C2233-225-7500-M*	2.233	56.72	0.225	5.72	7.500	190.50	3.645	92.59	3.113	79.07	172.36	766.70	44.71	7.82	**C2233-225-7500-S***	4.363	110.82	121.97	542.56	38.88	6.80
C2233-225-8000-M*	2.233	56.72	0.225	5.72	8.000	203.20	3.863	98.11	3.289	83.55	172.36	766.70	41.66	7.29	**C2233-225-8000-S***	4.633	117.68	121.97	542.56	36.23	6.34
C2233-225-8500-M*	2.233	56.72	0.225	5.72	8.500	215.90	4.080	103.64	3.465	88.02	172.36	766.70	39.00	6.82	**C2233-225-8500-S***	4.903	124.54	121.97	542.56	33.91	5.93
C2233-225-9000-M*	2.233	56.72	0.225	5.72	9.000	228.60	4.298	109.17	3.641	92.49	172.36	766.70	36.66	6.41	**C2233-225-9000-S***	5.173	131.40	121.97	542.56	31.88	5.58
C2233-225-9500-M*	2.233	56.72	0.225	5.72	9.500	241.30	4.515	114.69	3.818	96.97	172.36	766.70	34.58	6.05	**C2233-225-9500-S***	5.444	138.27	121.97	542.56	30.07	5.26
C2233-250-3250-M	2.233	56.72	0.250	6.35	3.250	82.55	1.844	46.85	1.676	42.58	230.79	1026.59	164.20	28.73	**C2233-250-3250-S**	2.127	54.03	160.33	713.17	142.78	24.99
C2233-250-3500-M	2.233	56.72	0.250	6.35	3.500	88.90	1.967	49.95	1.781	45.23	230.79	1026.59	150.51	26.34	**C2233-250-3500-S**	2.275	57.79	160.33	713.17	130.88	22.90
C2233-250-3750-M	2.233	56.72	0.250	6.35	3.750	95.25	2.089	53.06	1.886	47.89	230.79	1026.59	138.94	24.31	**C2233-250-3750-S**	2.423	61.54	160.33	713.17	120.81	21.14

Part Numbers with an "*" are squared and not ground. **Part Numbers in bold** represent the newly expanded Associated Spring RAYMOND compression spring offering.

MUSIC WIRE															STAINLESS STEEL					
Catalog #	Outside Diameter (OD)		Wire Diameter (d)		Free Length (L) Approx		Load Length (L_1)		Solid Height (Sh) Approx		Load (P) at L_1		Spring Rate (R)		Catalog #	Load Length (L_1)		Load (P) at L_1		Spring Rate (R)	
	in	mm	in	mm	in	mm	in	mm	in	mm	lb	N	lb/in	N/mm		in	mm	lb	N	lb/in	N/mm
C2233-250-4000-M	2.233	56.72	0.250	6.35	4.000	101.60	2.211	56.16	1.990	50.55	230.79	1026.59	129.01	22.58	C2233-250-4000-S	2.571	65.30	160.33	713.17	112.18	19.63
C2233-250-4250-M	2.233	56.72	0.250	6.35	4.250	107.95	2.333	59.27	2.095	53.21	230.79	1026.59	120.41	21.07	C2233-250-4250-S	2.719	69.06	160.33	713.17	104.71	18.32
C2233-250-4500-M	2.233	56.72	0.250	6.35	4.500	114.30	2.456	62.37	2.200	55.87	230.79	1026.59	112.89	19.76	C2233-250-4500-S	2.867	72.81	160.33	713.17	98.16	17.18
C2233-250-4750-M	2.233	56.72	0.250	6.35	4.750	120.65	2.578	65.48	2.304	58.53	230.79	1026.59	106.25	18.59	C2233-250-4750-S	3.015	76.57	160.33	713.17	92.39	16.17
C2233-250-5000-M	2.233	56.72	0.250	6.35	5.000	127.00	2.700	68.58	2.409	61.18	230.79	1026.59	100.34	17.56	C2233-250-5000-S	3.163	80.33	160.33	713.17	87.26	15.27
C2233-250-5250-M	2.233	56.72	0.250	6.35	5.250	133.35	2.822	71.68	2.513	63.84	230.79	1026.59	95.06	16.64	C2233-250-5250-S	3.310	84.09	160.33	713.17	82.66	14.47
C2233-250-5500-M	2.233	56.72	0.250	6.35	5.500	139.70	2.944	74.79	2.618	66.50	230.79	1026.59	90.31	15.80	C2233-250-5500-S	3.458	87.84	160.33	713.17	78.53	13.74
C2233-250-5750-M	2.233	56.72	0.250	6.35	5.750	146.05	3.067	77.89	2.723	69.16	230.79	1026.59	86.01	15.05	C2233-250-5750-S	3.606	91.60	160.33	713.17	74.79	13.09
C2233-250-6000-M	2.233	56.72	0.250	6.35	6.000	152.40	3.189	81.00	2.827	71.82	230.79	1026.59	82.10	14.37	C2233-250-6000-S	3.754	95.36	160.33	713.17	71.39	12.49
C2233-250-6250-M	2.233	56.72	0.250	6.35	6.250	158.75	3.311	84.10	2.932	74.48	230.79	1026.59	78.53	13.74	C2233-250-6250-S	3.902	99.11	160.33	713.17	68.29	11.95
C2233-250-6500-M	2.233	56.72	0.250	6.35	6.500	165.10	3.433	87.21	3.037	77.13	230.79	1026.59	75.26	13.17	C2233-250-6500-S	4.050	102.87	160.33	713.17	65.44	11.45
C2233-250-6750-M	2.233	56.72	0.250	6.35	6.750	171.45	3.556	90.31	3.141	79.79	230.79	1026.59	72.25	12.64	C2233-250-6750-S	4.198	106.63	160.33	713.17	62.82	10.99
C2233-250-7000-M	2.233	56.72	0.250	6.35	7.000	177.80	3.678	93.42	3.246	82.45	230.79	1026.59	69.47	12.16	C2233-250-7000-S	4.346	110.39	160.33	713.17	60.41	10.57
C2233-250-7500-M	2.233	56.72	0.250	6.35	7.500	190.50	3.922	99.62	3.455	87.77	230.79	1026.59	64.51	11.29	C2233-250-7500-S	4.642	117.90	160.33	713.17	56.09	9.82
C2233-250-8000-M	2.233	56.72	0.250	6.35	8.000	203.20	4.167	105.83	3.665	93.08	230.79	1026.59	60.21	10.54	C2233-250-8000-S	4.938	125.41	160.33	713.17	52.35	9.16
C2233-250-8500-M*	2.233	56.72	0.250	6.35	8.500	215.90	4.539	115.29	4.032	102.41	230.79	1026.59	58.26	10.20	C2233-250-8500-S*	5.335	135.52	160.33	713.17	50.66	8.87
C2233-250-9000-M*	2.233	56.72	0.250	6.35	9.000	228.60	4.783	121.50	4.241	107.73	230.79	1026.59	54.73	9.58	C2233-250-9000-S*	5.631	143.04	160.33	713.17	47.59	8.33
C2233-250-9500-M*	2.233	56.72	0.250	6.35	9.500	241.30	5.028	127.71	4.451	113.04	230.79	1026.59	51.61	9.03	C2233-250-9500-S*	5.927	150.55	160.33	713.17	44.87	7.85
C2291-177-4000-M	2.291	58.19	0.177	4.50	4.000	101.60	1.541	39.15	1.163	29.53	86.28	383.78	35.09	6.14	C2291-177-4000-S	1.925	48.89	63.32	281.67	30.51	5.34
C2291-177-4250-M	2.291	58.19	0.177	4.50	4.250	107.95	1.623	41.21	1.217	30.91	86.28	383.78	32.84	5.75	C2291-177-4250-S	2.032	51.62	63.32	281.67	28.55	5.00
C2291-177-4500-M	2.291	58.19	0.177	4.50	4.500	114.30	1.704	43.28	1.271	32.29	86.28	383.78	30.86	5.40	C2291-177-4500-S	2.140	54.36	63.32	281.67	26.83	4.70
C2291-177-4750-M	2.291	58.19	0.177	4.50	4.750	120.65	1.785	45.35	1.325	33.67	86.28	383.78	29.10	5.09	C2291-177-4750-S	2.248	57.09	63.32	281.67	25.31	4.43
C2291-177-5000-M	2.291	58.19	0.177	4.50	5.000	127.00	1.867	47.42	1.380	35.04	86.28	383.78	27.54	4.82	C2291-177-5000-S	2.355	59.83	63.32	281.67	23.95	4.19
C2291-177-5250-M	2.291	58.19	0.177	4.50	5.250	133.35	1.948	49.49	1.434	36.42	86.28	383.78	26.13	4.57	C2291-177-5250-S	2.463	62.57	63.32	281.67	22.72	3.98
C2291-177-5500-M	2.291	58.19	0.177	4.50	5.500	139.70	2.030	51.55	1.488	37.80	86.28	383.78	24.86	4.35	C2291-177-5500-S	2.571	65.30	63.32	281.67	21.62	3.78
C2291-177-5750-M	2.291	58.19	0.177	4.50	5.750	146.05	2.111	53.62	1.542	39.18	86.28	383.78	23.71	4.15	C2291-177-5750-S	2.679	68.04	63.32	281.67	20.62	3.61
C2291-177-6000-M	2.291	58.19	0.177	4.50	6.000	152.40	2.192	55.69	1.597	40.55	86.28	383.78	22.66	3.97	C2291-177-6000-S	2.786	70.77	63.32	281.67	19.70	3.45
C2291-177-6250-M	2.291	58.19	0.177	4.50	6.250	158.75	2.274	57.76	1.651	41.93	86.28	383.78	21.70	3.80	C2291-177-6250-S	2.894	73.51	63.32	281.67	18.87	3.30
C2291-177-6500-M	2.291	58.19	0.177	4.50	6.500	165.10	2.355	59.82	1.705	43.31	86.28	383.78	20.82	3.64	C2291-177-6500-S	3.002	76.24	63.32	281.67	18.10	3.17
C2291-177-6750-M	2.291	58.19	0.177	4.50	6.750	171.45	2.437	61.89	1.759	44.69	86.28	383.78	20.00	3.50	C2291-177-6750-S	3.109	78.98	63.32	281.67	17.39	3.04
C2291-177-7000-M	2.291	58.19	0.177	4.50	7.000	177.80	2.518	63.96	1.814	46.06	86.28	383.78	19.25	3.37	C2291-177-7000-S	3.217	81.71	63.32	281.67	16.74	2.93
C2291-177-7500-M	2.291	58.19	0.177	4.50	7.500	190.50	2.681	68.10	1.922	48.82	86.28	383.78	17.90	3.13	C2291-177-7500-S	3.433	87.19	63.32	281.67	15.57	2.72
C2291-177-8000-M	2.291	58.19	0.177	4.50	8.000	203.20	2.844	72.23	2.030	51.57	86.28	383.78	16.73	2.93	C2291-177-8000-S	3.648	92.66	63.32	281.67	14.55	2.55
C2291-177-8500-M	2.291	58.19	0.177	4.50	8.500	215.90	3.007	76.37	2.139	54.33	86.28	383.78	15.71	2.75	C2291-177-8500-S	3.863	98.13	63.32	281.67	13.66	2.39
C2291-177-9000-M	2.291	58.19	0.177	4.50	9.000	228.60	3.169	80.50	2.247	57.09	86.28	383.78	14.80	2.59	C2291-177-9000-S	4.079	103.60	63.32	281.67	12.87	2.25
C2291-177-9500-M	2.291	58.19	0.177	4.50	9.500	241.30	3.332	84.64	2.356	59.84	86.28	383.78	13.99	2.45	C2291-177-9500-S	4.294	109.07	63.32	281.67	12.16	2.13
C2291-192-3750-M	2.291	58.19	0.192	4.88	3.750	95.25	1.580	40.13	1.257	31.93	108.23	481.44	49.88	8.73	C2291-192-3750-S	1.939	49.26	78.53	349.31	43.37	7.59
C2291-192-4000-M	2.291	58.19	0.192	4.88	4.000	101.60	1.669	42.39	1.320	33.54	108.23	481.44	46.43	8.13	C2291-192-4000-S	2.055	52.20	78.53	349.31	40.37	7.07
C2291-192-4250-M	2.291	58.19	0.192	4.88	4.250	107.95	1.758	44.65	1.384	35.15	108.23	481.44	43.43	7.60	C2291-192-4250-S	2.170	55.13	78.53	349.31	37.76	6.61
C2291-192-4500-M	2.291	58.19	0.192	4.88	4.500	114.30	1.847	46.90	1.447	36.76	108.23	481.44	40.79	7.14	C2291-192-4500-S	2.286	58.06	78.53	349.31	35.47	6.21
C2291-192-4750-M	2.291	58.19	0.192	4.88	4.750	120.65	1.935	49.16	1.511	38.37	108.23	481.44	38.45	6.73	C2291-192-4750-S	2.402	61.00	78.53	349.31	33.44	5.85
C2291-192-5000-M	2.291	58.19	0.192	4.88	5.000	127.00	2.024	51.42	1.574	39.98	108.23	481.44	36.37	6.36	C2291-192-5000-S	2.517	63.93	78.53	349.31	31.63	5.53
C2291-192-5250-M	2.291	58.19	0.192	4.88	5.250	133.35	2.113	53.67	1.637	41.59	108.23	481.44	34.50	6.04	C2291-192-5250-S	2.633	66.87	78.53	349.31	30.00	5.25
C2291-192-5500-M	2.291	58.19	0.192	4.88	5.500	139.70	2.202	55.93	1.701	43.20	108.23	481.44	32.82	5.74	C2291-192-5500-S	2.748	69.80	78.53	349.31	28.54	4.99
C2291-192-5750-M	2.291	58.19	0.192	4.88	5.750	146.05	2.291	58.19	1.764	44.81	108.23	481.44	31.29	5.48	C2291-192-5750-S	2.864	72.74	78.53	349.31	27.21	4.76
C2291-192-6000-M	2.291	58.19	0.192	4.88	6.000	152.40	2.380	60.44	1.828	46.42	108.23	481.44	29.90	5.23	C2291-192-6000-S	2.979	75.67	78.53	349.31	26.00	4.55
C2291-192-6250-M	2.291	58.19	0.192	4.88	6.250	158.75	2.468	62.70	1.891	48.03	108.23	481.44	28.62	5.01	C2291-192-6250-S	3.095	78.61	78.53	349.31	24.89	4.36
C2291-192-6500-M	2.291	58.19	0.192	4.88	6.500	165.10	2.557	64.95	1.955	49.65	108.23	481.44	27.45	4.80	C2291-192-6500-S	3.210	81.54	78.53	349.31	23.87	4.18
C2291-192-6750-M	2.291	58.19	0.192	4.88	6.750	171.45	2.646	67.21	2.018	51.26	108.23	481.44	26.37	4.62	C2291-192-6750-S	3.326	84.47	78.53	349.31	22.93	4.01
C2291-192-7000-M	2.291	58.19	0.192	4.88	7.000	177.80	2.735	69.47	2.081	52.87	108.23	481.44	25.38	4.44	C2291-192-7000-S	3.441	87.41	78.53	349.31	22.07	3.86
C2291-192-7500-M	2.291	58.19	0.192	4.88	7.500	190.50	2.913	73.98	2.208	56.09	108.23	481.44	23.59	4.13	C2291-192-7500-S	3.672	93.28	78.53	349.31	20.52	3.59
C2291-192-8000-M	2.291	58.19	0.192	4.88	8.000	203.20	3.090	78.49	2.335	59.31	108.23	481.44	22.04	3.86	C2291-192-8000-S	3.903	99.15	78.53	349.31	19.17	3.35
C2291-192-8500-M	2.291	58.19	0.192	4.88	8.500	215.90	3.268	83.01	2.462	62.53	108.23	481.44	20.69	3.62	C2291-192-8500-S	4.134	105.01	78.53	349.31	17.99	3.15
C2291-192-9000-M	2.291	58.19	0.192	4.88	9.000	228.60	3.446	87.52	2.589	65.75	108.23	481.44	19.49	3.41	C2291-192-9000-S	4.365	110.88	78.53	349.31	16.94	2.97
C2291-192-9500-M*	2.291	58.19	0.192	4.88	9.500	241.30	3.747	95.18	2.868	72.86	108.23	481.44	18.81	3.29	C2291-192-9500-S*	4.700	119.38	78.53	349.31	16.36	2.86
C2291-207-3500-M	2.291	58.19	0.207	5.26	3.500	88.90	1.605	40.78	1.335	33.90	133.44	593.56	70.43	12.33	C2291-207-3500-S	1.937	49.20	95.72	425.77	61.24	10.72
C2291-207-3750-M	2.291	58.19	0.207	5.26	3.750	95.25	1.702	43.23	1.408	35.75	133.44	593.56	65.15	11.40	C2291-207-3750-S	2.061	52.34	95.72	425.77	56.65	9.91
C2291-207-4000-M	2.291	58.19	0.207	5.26	4.000	101.60	1.798	45.68	1.480	37.60	133.44	593.56	60.61	10.61	C2291-207-4000-S	2.184	55.47	95.72	425.77	52.71	9.22
C2291-207-4250-M	2.291	58.19	0.207	5.26	4.250	107.95	1.895	48.13	1.553	39.45	133.44	593.56	56.66	9.92	C2291-207-4250-S	2.307	58.60	95.72	425.77	49.27	8.62
C2291-207-4500-M	2.291	58.19	0.207	5.26	4.500	114.30	1.991	50.58	1.626	41.31	133.44	593.56	53.19	9.31	C2291-207-4500-S	2.431	61.74	95.72	425.77	46.26	8.09
C2291-207-4750-M	2.291	58.19	0.207	5.26	4.750	120.65	2.088	53.03	1.699	43.16	133.44	593.56	50.13	8.77	C2291-207-4750-S	2.554	64.87	95.72	425.77	43.59	7.63
C2291-207-5000-M	2.291	58.19	0.207	5.26	5.000	127.00	2.184	55.49	1.772	45.01	133.44	593.56	47.39	8.29	C2291-207-5000-S	2.677	68.01	95.72	425.77	41.21	7.21
C2291-207-5250-M	2.291	58.19	0.207	5.26	5.250	133.35	2.281	57.94	1.845	46.86	133.44	593.56	44.94	7.87	C2291-207-5250-S	2.801	71.14	95.72	425.77	39.08	6.84
C2291-207-5500-M	2.291	58.19	0.207	5.26	5.500	139.70	2.378	60.39	1.918	48.71	133.44	593.56	42.74	7.48	C2291-207-5500-S	2.924	74.28	95.72	425.77	37.16	6.50

FOR INFORMATION ON ALTERNATIVE FINISHES, SEE PAGE 311

Part Numbers with an "*" are squared and not ground. **Part Numbers in bold** represent the newly expanded Associated Spring RAYMOND compression spring offering.

MUSIC WIRE															STAINLESS STEEL						
Catalog #	Outside Diameter (OD)		Wire Diameter (d)		Free Length (L) Approx		Load Length (L_1)		Solid Height (Sh) Approx		Load (P) at L_1		Spring Rate (R)		Catalog #	Load Length (L_1)		Load (P) at L_1		Spring Rate (R)	
	in	mm	in	mm	in	mm	in	mm	in	mm	lb	N	lb/in	N/mm		in	mm	lb	N	lb/in	N/mm
C2291-207-5750-M	2.291	58.19	0.207	5.26	5.750	146.05	2.474	62.84	1.991	50.56	133.44	593.56	40.73	7.13	C2291-207-5750-S	3.048	77.41	95.72	425.77	35.42	6.20
C2291-207-6000-M	2.291	58.19	0.207	5.26	6.000	152.40	2.571	65.29	2.064	52.42	133.44	593.56	38.91	6.81	C2291-207-6000-S	3.171	80.54	95.72	425.77	33.83	5.92
C2291-207-6250-M	2.291	58.19	0.207	5.26	6.250	158.75	2.667	67.74	2.137	54.27	133.44	593.56	37.24	6.52	C2291-207-6250-S	3.294	83.68	95.72	425.77	32.39	5.67
C2291-207-6500-M	2.291	58.19	0.207	5.26	6.500	165.10	2.764	70.19	2.209	56.12	133.44	593.56	35.71	6.25	C2291-207-6500-S	3.418	86.81	95.72	425.77	31.06	5.43
C2291-207-6750-M	2.291	58.19	0.207	5.26	6.750	171.45	2.860	72.65	2.282	57.97	133.44	593.56	34.30	6.00	C2291-207-6750-S	3.541	89.95	95.72	425.77	29.83	5.22
C2291-207-7000-M	2.291	58.19	0.207	5.26	7.000	177.80	2.957	75.10	2.355	59.82	133.44	593.56	33.00	5.78	C2291-207-7000-S	3.665	93.08	95.72	425.77	28.70	5.02
C2291-207-7500-M*	2.291	58.19	0.207	5.26	7.500	190.50	3.277	83.23	2.658	67.51	133.44	593.56	31.60	5.53	C2291-207-7500-S*	4.016	102.01	95.72	425.77	27.48	4.81
C2291-207-8000-M*	2.291	58.19	0.207	5.26	8.000	203.20	3.470	88.13	2.804	71.22	133.44	593.56	29.46	5.15	C2291-207-8000-S*	4.263	108.28	95.72	425.77	25.61	4.48
C2291-207-8500-M*	2.291	58.19	0.207	5.26	8.500	215.90	3.663	93.03	2.950	74.92	133.44	593.56	27.59	4.83	C2291-207-8500-S*	4.510	114.55	95.72	425.77	23.99	4.20
C2291-207-9000-M*	2.291	58.19	0.207	5.26	9.000	228.60	3.856	97.94	3.095	78.62	133.44	593.56	25.94	4.54	C2291-207-9000-S*	4.757	120.82	95.72	425.77	22.56	3.95
C2291-207-9500-M*	2.291	58.19	0.207	5.26	9.500	241.30	4.049	102.84	3.241	82.33	133.44	593.56	24.48	4.28	C2291-207-9500-S*	5.003	127.08	95.72	425.77	21.29	3.73
C2291-225-3250-M	2.291	58.19	0.225	5.72	3.250	82.55	1.636	41.56	1.419	36.05	168.23	748.34	104.26	18.25	C2291-225-3250-S	1.937	49.20	119.05	529.57	90.66	15.87
C2291-225-3500-M	2.291	58.19	0.225	5.72	3.500	88.90	1.742	44.25	1.504	38.19	168.23	748.34	95.71	16.75	C2291-225-3500-S	2.070	52.57	119.05	529.57	83.23	14.56
C2291-225-3750-M	2.291	58.19	0.225	5.72	3.750	95.25	1.848	46.94	1.588	40.34	168.23	748.34	88.46	15.48	C2291-225-3750-S	2.202	55.94	119.05	529.57	76.92	13.46
C2291-225-4000-M	2.291	58.19	0.225	5.72	4.000	101.60	1.954	49.64	1.673	42.49	168.23	748.34	82.23	14.39	C2291-225-4000-S	2.335	59.31	119.05	529.57	71.51	12.51
C2291-225-4250-M	2.291	58.19	0.225	5.72	4.250	107.95	2.060	52.33	1.757	44.64	168.23	748.34	76.82	13.44	C2291-225-4250-S	2.468	62.68	119.05	529.57	66.80	11.69
C2291-225-4500-M	2.291	58.19	0.225	5.72	4.500	114.30	2.166	55.02	1.842	46.78	168.23	748.34	72.08	12.61	C2291-225-4500-S	2.601	66.05	119.05	529.57	62.68	10.97
C2291-225-4750-M	2.291	58.19	0.225	5.72	4.750	120.65	2.272	57.71	1.926	48.93	168.23	748.34	67.89	11.88	C2291-225-4750-S	2.733	69.43	119.05	529.57	59.03	10.33
C2291-225-5000-M	2.291	58.19	0.225	5.72	5.000	127.00	2.378	60.40	2.011	51.08	168.23	748.34	64.16	11.23	C2291-225-5000-S	2.866	72.80	119.05	529.57	55.79	9.76
C2291-225-5250-M	2.291	58.19	0.225	5.72	5.250	133.35	2.484	63.09	2.095	53.22	168.23	748.34	60.82	10.64	C2291-225-5250-S	2.999	76.17	119.05	529.57	52.88	9.25
C2291-225-5500-M	2.291	58.19	0.225	5.72	5.500	139.70	2.590	65.78	2.180	55.37	168.23	748.34	57.81	10.12	C2291-225-5500-S	3.132	79.54	119.05	529.57	50.27	8.80
C2291-225-5750-M	2.291	58.19	0.225	5.72	5.750	146.05	2.696	68.47	2.264	57.52	168.23	748.34	55.08	9.64	C2291-225-5750-S	3.264	82.91	119.05	529.57	47.90	8.38
C2291-225-6000-M	2.291	58.19	0.225	5.72	6.000	152.40	2.802	71.16	2.349	59.66	168.23	748.34	52.60	9.20	C2291-225-6000-S	3.397	86.29	119.05	529.57	45.74	8.00
C2291-225-6250-M	2.291	58.19	0.225	5.72	6.250	158.75	2.907	73.85	2.434	61.81	168.23	748.34	50.33	8.81	C2291-225-6250-S	3.530	89.66	119.05	529.57	43.77	7.66
C2291-225-6500-M	2.291	58.19	0.225	5.72	6.500	165.10	3.013	76.54	2.518	63.96	168.23	748.34	48.25	8.44	C2291-225-6500-S	3.663	93.03	119.05	529.57	41.96	7.34
C2291-225-6750-M	2.291	58.19	0.225	5.72	6.750	171.45	3.119	79.23	2.603	66.11	168.23	748.34	46.34	8.11	C2291-225-6750-S	3.795	96.40	119.05	529.57	40.29	7.05
C2291-225-7000-M*	2.291	58.19	0.225	5.72	7.000	177.80	3.355	85.22	2.847	72.32	168.23	748.34	46.15	8.08	C2291-225-7000-S*	4.034	102.45	119.05	529.57	40.13	7.02
C2291-225-7500-M*	2.291	58.19	0.225	5.72	7.500	190.50	3.567	90.60	3.016	76.61	168.23	748.34	42.77	7.49	C2291-225-7500-S*	4.299	109.20	119.05	529.57	37.19	6.51
C2291-225-8000-M*	2.291	58.19	0.225	5.72	8.000	203.20	3.779	95.98	3.185	80.91	168.23	748.34	39.85	6.97	C2291-225-8000-S*	4.565	115.94	119.05	529.57	34.66	6.06
C2291-225-8500-M*	2.291	58.19	0.225	5.72	8.500	215.90	3.990	101.36	3.354	85.20	168.23	748.34	37.31	6.53	C2291-225-8500-S*	4.830	122.69	119.05	529.57	32.44	5.68
C2291-225-9000-M*	2.291	58.19	0.225	5.72	9.000	228.60	4.202	106.74	3.523	89.50	168.23	748.34	35.07	6.14	C2291-225-9000-S*	5.096	129.43	119.05	529.57	30.49	5.34
C2291-225-9500-M*	2.291	58.19	0.225	5.72	9.500	241.30	4.414	112.12	3.693	93.79	168.23	748.34	33.08	5.79	C2291-225-9500-S*	5.361	136.17	119.05	529.57	28.76	5.03
C2291-250-3250-M	2.291	58.19	0.250	6.35	3.250	82.55	1.810	45.97	1.633	41.48	225.31	1002.24	156.43	27.38	C2291-250-3250-S	2.099	53.32	156.52	696.25	136.03	23.80
C2291-250-3500-M	2.291	58.19	0.250	6.35	3.500	88.90	1.929	48.99	1.734	44.04	225.31	1002.24	143.40	25.09	C2291-250-3500-S	2.245	57.02	156.52	696.25	124.69	21.82
C2291-250-3750-M	2.291	58.19	0.250	6.35	3.750	95.25	2.048	52.01	1.835	46.60	225.31	1002.24	132.37	23.16	C2291-250-3750-S	2.390	60.71	156.52	696.25	115.10	20.14
C2291-250-4000-M	2.291	58.19	0.250	6.35	4.000	101.60	2.167	55.04	1.936	49.16	225.31	1002.24	122.91	21.51	C2291-250-4000-S	2.536	64.40	156.52	696.25	106.88	18.70
C2291-250-4250-M	2.291	58.19	0.250	6.35	4.250	107.95	2.286	58.06	2.036	51.72	225.31	1002.24	114.72	20.08	C2291-250-4250-S	2.681	68.09	156.52	696.25	99.75	17.46
C2291-250-4500-M	2.291	58.19	0.250	6.35	4.500	114.30	2.405	61.09	2.137	54.28	225.31	1002.24	107.55	18.82	C2291-250-4500-S	2.826	71.79	156.52	696.25	93.52	16.37
C2291-250-4750-M	2.291	58.19	0.250	6.35	4.750	120.65	2.524	64.11	2.238	56.84	225.31	1002.24	101.22	17.71	C2291-250-4750-S	2.972	75.48	156.52	696.25	88.02	15.40
C2291-250-5000-M	2.291	58.19	0.250	6.35	5.000	127.00	2.643	67.13	2.339	59.40	225.31	1002.24	95.60	16.73	C2291-250-5000-S	3.117	79.17	156.52	696.25	83.13	14.55
C2291-250-5250-M	2.291	58.19	0.250	6.35	5.250	133.35	2.762	70.16	2.439	61.96	225.31	1002.24	90.57	15.85	C2291-250-5250-S	3.262	82.87	156.52	696.25	78.75	13.78
C2291-250-5500-M	2.291	58.19	0.250	6.35	5.500	139.70	2.881	73.18	2.540	64.52	225.31	1002.24	86.04	15.06	C2291-250-5500-S	3.408	86.56	156.52	696.25	74.82	13.09
C2291-250-5750-M	2.291	58.19	0.250	6.35	5.750	146.05	3.000	76.21	2.641	67.08	225.31	1002.24	81.94	14.34	C2291-250-5750-S	3.553	90.25	156.52	696.25	71.25	12.47
C2291-250-6000-M	2.291	58.19	0.250	6.35	6.000	152.40	3.119	79.23	2.742	69.63	225.31	1002.24	78.22	13.69	C2291-250-6000-S	3.699	93.95	156.52	696.25	68.01	11.90
C2291-250-6250-M	2.291	58.19	0.250	6.35	6.250	158.75	3.238	82.26	2.842	72.19	225.31	1002.24	74.82	13.09	C2291-250-6250-S	3.844	97.64	156.52	696.25	65.06	11.38
C2291-250-6500-M	2.291	58.19	0.250	6.35	6.500	165.10	3.357	85.28	2.943	74.75	225.31	1002.24	71.70	12.55	C2291-250-6500-S	3.989	101.33	156.52	696.25	62.35	10.91
C2291-250-6750-M	2.291	58.19	0.250	6.35	6.750	171.45	3.477	88.30	3.044	77.31	225.31	1002.24	68.83	12.05	C2291-250-6750-S	4.135	105.02	156.52	696.25	59.85	10.47
C2291-250-7000-M	2.291	58.19	0.250	6.35	7.000	177.80	3.596	91.33	3.145	79.87	225.31	1002.24	66.18	11.58	C2291-250-7000-S	4.280	108.72	156.52	696.25	57.55	10.07
C2291-250-7500-M*	2.291	58.19	0.250	6.35	7.500	190.50	3.965	100.70	3.508	89.10	225.31	1002.24	63.73	11.15	C2291-250-7500-S*	4.676	118.76	156.52	696.25	55.42	9.70
C2291-250-8000-M*	2.291	58.19	0.250	6.35	8.000	203.20	4.203	106.75	3.709	94.22	225.31	1002.24	59.34	10.38	C2291-250-8000-S*	4.966	126.15	156.52	696.25	51.60	9.03
C2291-250-8500-M*	2.291	58.19	0.250	6.35	8.500	215.90	4.441	112.80	3.911	99.33	225.31	1002.24	55.51	9.71	C2291-250-8500-S*	5.257	133.53	156.52	696.25	48.27	8.45
C2291-250-9000-M*	2.291	58.19	0.250	6.35	9.000	228.60	4.679	118.85	4.112	104.45	225.31	1002.24	52.14	9.13	C2291-250-9000-S*	5.548	140.92	156.52	696.25	45.34	7.93
C2291-250-9500-M*	2.291	58.19	0.250	6.35	9.500	241.30	4.917	124.89	4.314	109.57	225.31	1002.24	49.16	8.60	C2291-250-9500-S*	5.839	148.30	156.52	696.25	42.75	7.48
C2350-192-3750-M	2.350	59.69	0.192	4.88	3.750	95.25	1.550	39.36	1.220	30.98	105.63	469.85	48.01	8.40	C2350-192-3750-S	1.914	48.62	76.64	340.90	41.75	7.31
C2350-192-4000-M	2.350	59.69	0.192	4.88	4.000	101.60	1.636	41.56	1.280	32.52	105.63	469.85	44.69	7.82	C2350-192-4000-S	2.028	51.51	76.64	340.90	38.86	6.80
C2350-192-4250-M	2.350	59.69	0.192	4.88	4.250	107.95	1.723	43.76	1.341	34.06	105.63	469.85	41.80	7.31	C2350-192-4250-S	2.141	54.39	76.64	340.90	36.35	6.36
C2350-192-4500-M	2.350	59.69	0.192	4.88	4.500	114.30	1.809	45.96	1.401	35.60	105.63	469.85	39.26	6.87	C2350-192-4500-S	2.255	57.28	76.64	340.90	34.14	5.97
C2350-192-4750-M	2.350	59.69	0.192	4.88	4.750	120.65	1.896	48.16	1.462	37.14	105.63	469.85	37.01	6.48	C2350-192-4750-S	2.369	60.16	76.64	340.90	32.18	5.63
C2350-192-5000-M	2.350	59.69	0.192	4.88	5.000	127.00	1.983	50.36	1.523	38.68	105.63	469.85	35.01	6.13	C2350-192-5000-S	2.482	63.05	76.64	340.90	30.44	5.33
C2350-192-5250-M	2.350	59.69	0.192	4.88	5.250	133.35	2.069	52.56	1.583	40.22	105.63	469.85	33.21	5.81	C2350-192-5250-S	2.596	65.94	76.64	340.90	28.88	5.05
C2350-192-5500-M	2.350	59.69	0.192	4.88	5.500	139.70	2.156	54.76	1.644	41.76	105.63	469.85	31.59	5.53	C2350-192-5500-S	2.710	68.82	76.64	340.90	27.47	4.81
C2350-192-5750-M	2.350	59.69	0.192	4.88	5.750	146.05	2.242	56.96	1.705	43.30	105.63	469.85	30.11	5.27	C2350-192-5750-S	2.823	71.71	76.64	340.90	26.19	4.58
C2350-192-6000-M	2.350	59.69	0.192	4.88	6.000	152.40	2.329	59.16	1.765	44.84	105.63	469.85	28.77	5.04	C2350-192-6000-S	2.937	74.60	76.64	340.90	25.02	4.38
C2350-192-6250-M	2.350	59.69	0.192	4.88	6.250	158.75	2.416	61.35	1.826	46.38	105.63	469.85	27.55	4.82	C2350-192-6250-S	3.051	77.48	76.64	340.90	23.95	4.19

Part Numbers with an "*" are squared and not ground. **Part Numbers in bold** represent the newly expanded Associated Spring RAYMOND compression spring offering.

MUSIC WIRE															STAINLESS STEEL					
Catalog #	Outside Diameter (OD)		Wire Diameter (d)		Free Length (L) Approx		Load Length (L_1)		Solid Height (Sh) Approx		Load (P) at L_1		Spring Rate (R)		Catalog #	Load Length (L_1)		Load (P) at L_1		Spring Rate (R)	
	in	mm	in	mm	in	mm	in	mm	in	mm	lb	N	lb/in	N/mm		in	mm	lb	N	lb/in	N/mm
C2350-192-6500-M	2.350	59.69	0.192	4.88	6.500	165.10	2.502	63.55	1.886	47.91	105.63	469.85	26.42	4.62	**C2350-192-6500-S**	3.164	80.37	76.64	340.90	22.98	4.02
C2350-192-6750-M	2.350	59.69	0.192	4.88	6.750	171.45	2.589	65.75	1.947	49.45	105.63	469.85	25.38	4.44	**C2350-192-6750-S**	3.278	83.26	76.64	340.90	22.07	3.86
C2350-192-7000-M	2.350	59.69	0.192	4.88	7.000	177.80	2.675	67.95	2.008	50.99	105.63	469.85	24.42	4.27	**C2350-192-7000-S**	3.391	86.14	76.64	340.90	21.24	3.72
C2350-192-7500-M	2.350	59.69	0.192	4.88	7.500	190.50	2.848	72.35	2.129	54.07	105.63	469.85	22.71	3.97	**C2350-192-7500-S**	3.619	91.92	76.64	340.90	19.75	3.46
C2350-192-8000-M	2.350	59.69	0.192	4.88	8.000	203.20	3.022	76.75	2.250	57.15	105.63	469.85	21.22	3.71	**C2350-192-8000-S**	3.846	97.69	76.64	340.90	18.45	3.23
C2350-192-8500-M	2.350	59.69	0.192	4.88	8.500	215.90	3.195	81.15	2.371	60.23	105.63	469.85	19.91	3.48	**C2350-192-8500-S**	4.073	103.46	76.64	340.90	17.31	3.03
C2350-192-9000-M	2.350	59.69	0.192	4.88	9.000	228.60	3.368	85.54	2.493	63.31	105.63	469.85	18.76	3.28	**C2350-192-9000-S**	4.301	109.24	76.64	340.90	16.31	2.85
C2350-192-9500-M	2.350	59.69	0.192	4.88	9.500	241.30	3.541	89.94	2.614	66.39	105.63	469.85	17.73	3.10	**C2350-192-9500-S**	4.528	115.01	76.64	340.90	15.41	2.70
C2350-207-3750-M	2.350	59.69	0.207	5.26	3.750	95.25	1.669	42.38	1.366	34.70	130.24	579.35	62.57	10.95	**C2350-207-3750-S**	2.033	51.64	93.43	415.58	54.41	9.52
C2350-207-4000-M	2.350	59.69	0.207	5.26	4.000	101.60	1.763	44.77	1.436	36.48	130.24	579.35	58.21	10.19	**C2350-207-4000-S**	2.154	54.72	93.43	415.58	50.62	8.86
C2350-207-4250-M	2.350	59.69	0.207	5.26	4.250	107.95	1.857	47.16	1.506	38.25	130.24	579.35	54.42	9.52	**C2350-207-4250-S**	2.276	57.80	93.43	415.58	47.32	8.28
C2350-207-4500-M	2.350	59.69	0.207	5.26	4.500	114.30	1.951	49.54	1.576	40.02	130.24	579.35	51.09	8.94	**C2350-207-4500-S**	2.397	60.88	93.43	415.58	44.42	7.77
C2350-207-4750-M	2.350	59.69	0.207	5.26	4.750	120.65	2.045	51.93	1.645	41.80	130.24	579.35	48.14	8.42	**C2350-207-4750-S**	2.518	63.96	93.43	415.58	41.86	7.33
C2350-207-5000-M	2.350	59.69	0.207	5.26	5.000	127.00	2.139	54.32	1.715	43.57	130.24	579.35	45.52	7.97	**C2350-207-5000-S**	2.640	67.05	93.43	415.58	39.58	6.93
C2350-207-5250-M	2.350	59.69	0.207	5.26	5.250	133.35	2.233	56.71	1.785	45.34	130.24	579.35	43.16	7.55	**C2350-207-5250-S**	2.761	70.13	93.43	415.58	37.53	6.57
C2350-207-5500-M	2.350	59.69	0.207	5.26	5.500	139.70	2.327	59.10	1.855	47.11	130.24	579.35	41.04	7.18	**C2350-207-5500-S**	2.882	73.21	93.43	415.58	35.69	6.25
C2350-207-5750-M	2.350	59.69	0.207	5.26	5.750	146.05	2.421	61.48	1.925	48.89	130.24	579.35	39.12	6.85	**C2350-207-5750-S**	3.004	76.29	93.43	415.58	34.02	5.95
C2350-207-6000-M	2.350	59.69	0.207	5.26	6.000	152.40	2.515	63.87	1.995	50.66	130.24	579.35	37.37	6.54	**C2350-207-6000-S**	3.125	79.37	93.43	415.58	32.49	5.69
C2350-207-6250-M	2.350	59.69	0.207	5.26	6.250	158.75	2.609	66.26	2.064	52.43	130.24	579.35	35.77	6.26	**C2350-207-6250-S**	3.246	82.45	93.43	415.58	31.10	5.44
C2350-207-6500-M	2.350	59.69	0.207	5.26	6.500	165.10	2.703	68.65	2.134	54.21	130.24	579.35	34.30	6.00	**C2350-207-6500-S**	3.368	85.53	93.43	415.58	29.83	5.22
C2350-207-6750-M	2.350	59.69	0.207	5.26	6.750	171.45	2.797	71.04	2.204	55.98	130.24	579.35	32.95	5.77	**C2350-207-6750-S**	3.489	88.62	93.43	415.58	28.65	5.01
C2350-207-7000-M	2.350	59.69	0.207	5.26	7.000	177.80	2.891	73.42	2.274	57.75	130.24	579.35	31.70	5.55	**C2350-207-7000-S**	3.610	91.70	93.43	415.58	27.56	4.82
C2350-207-7500-M	2.350	59.69	0.207	5.26	7.500	190.50	3.079	78.20	2.413	61.30	130.24	579.35	29.46	5.16	**C2350-207-7500-S**	3.853	97.86	93.43	415.58	25.62	4.48
C2350-207-8000-M*	2.350	59.69	0.207	5.26	8.000	203.20	3.396	86.26	2.713	68.90	130.24	579.35	28.29	4.95	**C2350-207-8000-S***	4.202	106.73	93.43	415.58	24.60	4.30
C2350-207-8500-M*	2.350	59.69	0.207	5.26	8.500	215.90	3.584	91.03	2.852	72.45	130.24	579.35	26.49	4.64	**C2350-207-8500-S***	4.445	112.89	93.43	415.58	23.04	4.03
C2350-207-9000-M*	2.350	59.69	0.207	5.26	9.000	228.60	3.772	95.81	2.992	75.99	130.24	579.35	24.91	4.36	**C2350-207-9000-S***	4.687	119.06	93.43	415.58	21.66	3.79
C2350-207-9500-M*	2.350	59.69	0.207	5.26	9.500	241.30	3.960	100.58	3.131	79.54	130.24	579.35	23.51	4.11	**C2350-207-9500-S***	4.930	125.22	93.43	415.58	20.44	3.58
C2350-225-3500-M	2.350	59.69	0.225	5.72	3.500	88.90	1.708	43.40	1.462	37.13	164.23	730.53	91.67	16.04	**C2350-225-3500-S**	2.042	51.87	116.22	516.96	79.71	13.95
C2350-225-3750-M	2.350	59.69	0.225	5.72	3.750	95.25	1.812	46.02	1.543	39.19	164.23	730.53	84.73	14.83	**C2350-225-3750-S**	2.173	55.18	116.22	516.96	73.68	12.89
C2350-225-4000-M	2.350	59.69	0.225	5.72	4.000	101.60	1.915	48.64	1.624	41.25	164.23	730.53	78.76	13.78	**C2350-225-4000-S**	2.303	58.50	116.22	516.96	68.49	11.99
C2350-225-4250-M	2.350	59.69	0.225	5.72	4.250	107.95	2.018	51.26	1.705	43.31	164.23	730.53	73.58	12.88	**C2350-225-4250-S**	2.434	61.81	116.22	516.96	63.98	11.20
C2350-225-4500-M	2.350	59.69	0.225	5.72	4.500	114.30	2.121	53.88	1.786	45.37	164.23	730.53	69.04	12.08	**C2350-225-4500-S**	2.564	65.13	116.22	516.96	60.03	10.51
C2350-225-4750-M	2.350	59.69	0.225	5.72	4.750	120.65	2.224	56.50	1.867	47.43	164.23	730.53	65.02	11.38	**C2350-225-4750-S**	2.695	68.44	116.22	516.96	56.54	9.89
C2350-225-5000-M	2.350	59.69	0.225	5.72	5.000	127.00	2.327	59.12	1.949	49.49	164.23	730.53	61.45	10.75	**C2350-225-5000-S**	2.825	71.76	116.22	516.96	53.44	9.35
C2350-225-5250-M	2.350	59.69	0.225	5.72	5.250	133.35	2.431	61.74	2.030	51.55	164.23	730.53	58.25	10.19	**C2350-225-5250-S**	2.956	75.07	116.22	516.96	50.65	8.86
C2350-225-5500-M	2.350	59.69	0.225	5.72	5.500	139.70	2.534	64.36	2.111	53.61	164.23	730.53	55.37	9.69	**C2350-225-5500-S**	3.086	78.39	116.22	516.96	48.14	8.43
C2350-225-5750-M	2.350	59.69	0.225	5.72	5.750	146.05	2.637	66.98	2.192	55.67	164.23	730.53	52.75	9.23	**C2350-225-5750-S**	3.217	81.70	116.22	516.96	45.87	8.03
C2350-225-6000-M	2.350	59.69	0.225	5.72	6.000	152.40	2.740	69.60	2.273	57.73	164.23	730.53	50.38	8.82	**C2350-225-6000-S**	3.347	85.01	116.22	516.96	43.81	7.67
C2350-225-6250-M	2.350	59.69	0.225	5.72	6.250	158.75	2.843	72.22	2.354	59.79	164.23	730.53	48.21	8.44	**C2350-225-6250-S**	3.478	88.33	116.22	516.96	41.92	7.34
C2350-225-6500-M	2.350	59.69	0.225	5.72	6.500	165.10	2.946	74.84	2.435	61.85	164.23	730.53	46.21	8.09	**C2350-225-6500-S**	3.608	91.64	116.22	516.96	40.19	7.03
C2350-225-6750-M	2.350	59.69	0.225	5.72	6.750	171.45	3.050	77.46	2.516	63.91	164.23	730.53	44.38	7.77	**C2350-225-6750-S**	3.739	94.96	116.22	516.96	38.59	6.75
C2350-225-7000-M*	2.350	59.69	0.225	5.72	7.000	177.80	3.285	83.43	2.761	70.12	164.23	730.53	44.21	7.74	**C2350-225-7000-S***	3.977	101.00	116.22	516.96	38.44	6.73
C2350-225-7500-M*	2.350	59.69	0.225	5.72	7.500	190.50	3.491	88.67	2.923	74.24	164.23	730.53	40.97	7.17	**C2350-225-7500-S***	4.238	107.63	116.22	516.96	35.62	6.23
C2350-225-8000-M*	2.350	59.69	0.225	5.72	8.000	203.20	3.697	93.92	3.085	78.36	164.23	730.53	38.17	6.68	**C2350-225-8000-S***	4.499	114.26	116.22	516.96	33.19	5.81
C2350-225-8500-M*	2.350	59.69	0.225	5.72	8.500	215.90	3.904	99.16	3.247	82.48	164.23	730.53	35.73	6.25	**C2350-225-8500-S***	4.760	120.89	116.22	516.96	31.07	5.44
C2350-225-9000-M*	2.350	59.69	0.225	5.72	9.000	228.60	4.110	104.40	3.410	86.60	164.23	730.53	33.59	5.88	**C2350-225-9000-S***	5.021	127.52	116.22	516.96	29.21	5.11
C2350-225-9500-M*	2.350	59.69	0.225	5.72	9.500	241.30	4.316	109.64	3.572	90.72	164.23	730.53	31.68	5.54	**C2350-225-9500-S***	5.282	134.15	116.22	516.96	27.55	4.82
C2350-250-3250-M	2.350	59.69	0.250	6.35	3.250	82.55	1.776	45.11	1.591	40.42	220.00	978.61	149.24	26.12	**C2350-250-3250-S**	2.072	52.64	152.83	679.83	129.77	22.71
C2350-250-3500-M	2.350	59.69	0.250	6.35	3.500	88.90	1.892	48.05	1.688	42.89	220.00	978.61	136.80	23.94	**C2350-250-3500-S**	2.215	56.27	152.83	679.83	118.96	20.82
C2350-250-3750-M	2.350	59.69	0.250	6.35	3.750	95.25	2.008	51.00	1.785	45.35	220.00	978.61	126.28	22.10	**C2350-250-3750-S**	2.358	59.90	152.83	679.83	109.81	19.22
C2350-250-4000-M	2.350	59.69	0.250	6.35	4.000	101.60	2.124	53.94	1.882	47.81	220.00	978.61	117.26	20.52	**C2350-250-4000-S**	2.501	63.53	152.83	679.83	101.96	17.84
C2350-250-4250-M	2.350	59.69	0.250	6.35	4.250	107.95	2.240	56.89	1.979	50.27	220.00	978.61	109.44	19.15	**C2350-250-4250-S**	2.644	67.16	152.83	679.83	95.17	16.65
C2350-250-4500-M	2.350	59.69	0.250	6.35	4.500	114.30	2.356	59.84	2.076	52.74	220.00	978.61	102.60	17.96	**C2350-250-4500-S**	2.787	70.79	152.83	679.83	89.22	15.61
C2350-250-4750-M	2.350	59.69	0.250	6.35	4.750	120.65	2.472	62.78	2.173	55.20	220.00	978.61	96.57	16.90	**C2350-250-4750-S**	2.930	74.42	152.83	679.83	83.97	14.69
C2350-250-5000-M	2.350	59.69	0.250	6.35	5.000	127.00	2.588	65.73	2.270	57.66	220.00	978.61	91.20	15.96	**C2350-250-5000-S**	3.073	78.05	152.83	679.83	79.31	13.88
C2350-250-5250-M	2.350	59.69	0.250	6.35	5.250	133.35	2.704	68.68	2.367	60.12	220.00	978.61	86.40	15.12	**C2350-250-5250-S**	3.216	81.68	152.83	679.83	75.13	13.15
C2350-250-5500-M	2.350	59.69	0.250	6.35	5.500	139.70	2.820	71.62	2.464	62.59	220.00	978.61	82.08	14.36	**C2350-250-5500-S**	3.359	85.31	152.83	679.83	71.38	12.49
C2350-250-5750-M	2.350	59.69	0.250	6.35	5.750	146.05	2.936	74.57	2.561	65.05	220.00	978.61	78.17	13.68	**C2350-250-5750-S**	3.502	88.94	152.83	679.83	67.98	11.90
C2350-250-6000-M	2.350	59.69	0.250	6.35	6.000	152.40	3.052	77.51	2.658	67.51	220.00	978.61	74.62	13.06	**C2350-250-6000-S**	3.645	92.57	152.83	679.83	64.89	11.36
C2350-250-6250-M	2.350	59.69	0.250	6.35	6.250	158.75	3.168	80.46	2.755	69.98	220.00	978.61	71.38	12.49	**C2350-250-6250-S**	3.788	96.20	152.83	679.83	62.07	10.86
C2350-250-6500-M	2.350	59.69	0.250	6.35	6.500	165.10	3.284	83.41	2.852	72.44	220.00	978.61	68.40	11.97	**C2350-250-6500-S**	3.930	99.83	152.83	679.83	59.48	10.41
C2350-250-6750-M	2.350	59.69	0.250	6.35	6.750	171.45	3.400	86.35	2.949	74.90	220.00	978.61	65.67	11.49	**C2350-250-6750-S**	4.073	103.46	152.83	679.83	57.10	9.99
C2350-250-7000-M	2.350	59.69	0.250	6.35	7.000	177.80	3.516	89.30	3.046	77.36	220.00	978.61	63.14	11.05	**C2350-250-7000-S**	4.216	107.10	152.83	679.83	54.90	9.61
C2350-250-7500-M*	2.350	59.69	0.250	6.35	7.500	190.50	3.882	98.59	3.405	86.49	220.00	978.61	60.80	10.64	**C2350-250-7500-S***	4.609	117.08	152.83	679.83	52.87	9.25

FOR INFORMATION ON ALTERNATIVE FINISHES, SEE PAGE 311

Part Numbers with an "*" are squared and not ground. **Part Numbers in bold** represent the newly expanded Associated Spring RAYMOND compression spring offering.

MUSIC WIRE															STAINLESS STEEL						
Catalog #	Outside Diameter (OD)		Wire Diameter (d)		Free Length (L) Approx		Load Length (L_1)		Solid Height (Sh) Approx		Load (P) at L_1		Spring Rate (R)		Catalog #	Load Length (L_1)		Load (P) at L_1		Spring Rate (R)	
	in	mm	in	mm	in	mm	in	mm	in	mm	lb	N	lb/in	N/mm		in	mm	lb	N	lb/in	N/mm
C2350-250-8000-M*	2.350	59.69	0.250	6.35	8.000	203.20	4.114	104.49	3.599	91.42	220.00	978.61	56.61	9.91	C2350-250-8000-S*	4.895	124.34	152.83	679.83	49.22	8.61
C2350-250-8500-M*	2.350	59.69	0.250	6.35	8.500	215.90	4.346	110.38	3.793	96.34	220.00	978.61	52.96	9.27	C2350-250-8500-S*	5.181	131.60	152.83	679.83	46.05	8.06
C2350-250-9000-M*	2.350	59.69	0.250	6.35	9.000	228.60	4.578	116.27	3.987	101.27	220.00	978.61	49.75	8.71	C2350-250-9000-S*	5.467	138.86	152.83	679.83	43.26	7.57
C2350-250-9500-M*	2.350	59.69	0.250	6.35	9.500	241.30	4.810	122.16	4.181	106.19	220.00	978.61	46.90	8.21	C2350-250-9500-S*	5.753	146.12	152.83	679.83	40.79	7.14
C2409-192-4000-M	2.409	61.19	0.192	4.88	4.000	101.60	1.606	40.78	1.242	31.55	103.14	458.81	43.08	7.54	C2409-192-4000-S	2.002	50.85	74.84	332.89	37.46	6.56
C2409-192-4250-M	2.409	61.19	0.192	4.88	4.250	107.95	1.690	42.93	1.300	33.03	103.14	458.81	40.29	7.05	C2409-192-4250-S	2.114	53.70	74.84	332.89	35.04	6.13
C2409-192-4500-M	2.409	61.19	0.192	4.88	4.500	114.30	1.774	45.07	1.358	34.50	103.14	458.81	37.84	6.62	C2409-192-4500-S	2.226	56.54	74.84	332.89	32.91	5.76
C2409-192-4750-M	2.409	61.19	0.192	4.88	4.750	120.65	1.859	47.22	1.416	35.97	103.14	458.81	35.68	6.24	C2409-192-4750-S	2.338	59.38	74.84	332.89	31.02	5.43
C2409-192-5000-M	2.409	61.19	0.192	4.88	5.000	127.00	1.943	49.36	1.474	37.45	103.14	458.81	33.75	5.91	C2409-192-5000-S	2.450	62.22	74.84	332.89	29.34	5.14
C2409-192-5250-M	2.409	61.19	0.192	4.88	5.250	133.35	2.028	51.51	1.532	38.92	103.14	458.81	32.01	5.60	C2409-192-5250-S	2.561	65.06	74.84	332.89	27.84	4.87
C2409-192-5500-M	2.409	61.19	0.192	4.88	5.500	139.70	2.112	53.65	1.590	40.39	103.14	458.81	30.45	5.33	C2409-192-5500-S	2.673	67.90	74.84	332.89	26.48	4.63
C2409-192-5750-M	2.409	61.19	0.192	4.88	5.750	146.05	2.197	55.80	1.648	41.87	103.14	458.81	29.03	5.08	C2409-192-5750-S	2.785	70.75	74.84	332.89	25.24	4.42
C2409-192-6000-M	2.409	61.19	0.192	4.88	6.000	152.40	2.281	57.94	1.706	43.34	103.14	458.81	27.74	4.85	C2409-192-6000-S	2.897	73.59	74.84	332.89	24.12	4.22
C2409-192-6250-M	2.409	61.19	0.192	4.88	6.250	158.75	2.366	60.09	1.764	44.81	103.14	458.81	26.55	4.65	C2409-192-6250-S	3.009	76.43	74.84	332.89	23.09	4.04
C2409-192-6500-M	2.409	61.19	0.192	4.88	6.500	165.10	2.450	62.23	1.822	46.29	103.14	458.81	25.47	4.46	C2409-192-6500-S	3.121	79.27	74.84	332.89	22.15	3.88
C2409-192-6750-M	2.409	61.19	0.192	4.88	6.750	171.45	2.535	64.38	1.880	47.76	103.14	458.81	24.47	4.28	C2409-192-6750-S	3.233	82.11	74.84	332.89	21.28	3.72
C2409-192-7000-M	2.409	61.19	0.192	4.88	7.000	177.80	2.619	66.52	1.938	49.23	103.14	458.81	23.54	4.12	C2409-192-7000-S	3.345	84.95	74.84	332.89	20.47	3.58
C2409-192-7500-M	2.409	61.19	0.192	4.88	7.500	190.50	2.788	70.81	2.054	52.18	103.14	458.81	21.89	3.83	C2409-192-7500-S	3.568	90.64	74.84	332.89	19.04	3.33
C2409-192-8000-M	2.409	61.19	0.192	4.88	8.000	203.20	2.957	75.11	2.170	55.13	103.14	458.81	20.45	3.58	C2409-192-8000-S	3.792	96.32	74.84	332.89	17.79	3.11
C2409-192-8500-M	2.409	61.19	0.192	4.88	8.500	215.90	3.126	79.40	2.286	58.07	103.14	458.81	19.19	3.36	C2409-192-8500-S	4.016	102.00	74.84	332.89	16.69	2.92
C2409-192-9000-M	2.409	61.19	0.192	4.88	9.000	228.60	3.295	83.69	2.402	61.02	103.14	458.81	18.08	3.16	C2409-192-9000-S	4.240	107.69	74.84	332.89	15.72	2.75
C2409-192-9500-M	2.409	61.19	0.192	4.88	9.500	241.30	3.464	87.98	2.518	63.97	103.14	458.81	17.09	2.99	C2409-192-9500-S	4.463	113.37	74.84	332.89	14.86	2.60
C2409-207-3750-M	2.409	61.19	0.207	5.26	3.750	95.25	1.637	41.58	1.327	33.71	127.20	565.80	60.20	10.53	C2409-207-3750-S	2.007	50.98	91.24	405.85	52.34	9.16
C2409-207-4000-M	2.409	61.19	0.207	5.26	4.000	101.60	1.729	43.91	1.394	35.41	127.20	565.80	56.00	9.80	C2409-207-4000-S	2.126	54.01	91.24	405.85	48.70	8.52
C2409-207-4250-M	2.409	61.19	0.207	5.26	4.250	107.95	1.820	46.23	1.461	37.11	127.20	565.80	52.35	9.16	C2409-207-4250-S	2.246	57.04	91.24	405.85	45.52	7.97
C2409-207-4500-M	2.409	61.19	0.207	5.26	4.500	114.30	1.912	48.56	1.528	38.81	127.20	565.80	49.15	8.60	C2409-207-4500-S	2.365	60.07	91.24	405.85	42.74	7.48
C2409-207-4750-M	2.409	61.19	0.207	5.26	4.750	120.65	2.004	50.89	1.595	40.51	127.20	565.80	46.31	8.10	C2409-207-4750-S	2.484	63.10	91.24	405.85	40.27	7.05
C2409-207-5000-M	2.409	61.19	0.207	5.26	5.000	127.00	2.095	53.22	1.662	42.21	127.20	565.80	43.79	7.66	C2409-207-5000-S	2.604	66.14	91.24	405.85	38.08	6.66
C2409-207-5250-M	2.409	61.19	0.207	5.26	5.250	133.35	2.187	55.55	1.729	43.91	127.20	565.80	41.52	7.27	C2409-207-5250-S	2.723	69.17	91.24	405.85	36.11	6.32
C2409-207-5500-M	2.409	61.19	0.207	5.26	5.500	139.70	2.278	57.87	1.795	45.60	127.20	565.80	39.48	6.91	C2409-207-5500-S	2.843	72.20	91.24	405.85	34.33	6.01
C2409-207-5750-M	2.409	61.19	0.207	5.26	5.750	146.05	2.370	60.20	1.862	47.30	127.20	565.80	37.63	6.59	C2409-207-5750-S	2.962	75.23	91.24	405.85	32.73	5.73
C2409-207-6000-M	2.409	61.19	0.207	5.26	6.000	152.40	2.462	62.53	1.929	49.00	127.20	565.80	35.95	6.29	C2409-207-6000-S	3.081	78.26	91.24	405.85	31.26	5.47
C2409-207-6250-M	2.409	61.19	0.207	5.26	6.250	158.75	2.553	64.86	1.996	50.70	127.20	565.80	34.41	6.02	C2409-207-6250-S	3.201	81.30	91.24	405.85	29.92	5.24
C2409-207-6500-M	2.409	61.19	0.207	5.26	6.500	165.10	2.645	67.18	2.063	52.40	127.20	565.80	33.00	5.77	C2409-207-6500-S	3.320	84.33	91.24	405.85	28.69	5.02
C2409-207-6750-M	2.409	61.19	0.207	5.26	6.750	171.45	2.737	69.51	2.130	54.10	127.20	565.80	31.69	5.55	C2409-207-6750-S	3.439	87.36	91.24	405.85	27.56	4.82
C2409-207-7000-M	2.409	61.19	0.207	5.26	7.000	177.80	2.828	71.84	2.197	55.80	127.20	565.80	30.49	5.34	C2409-207-7000-S	3.559	90.39	91.24	405.85	26.51	4.64
C2409-207-7500-M	2.409	61.19	0.207	5.26	7.500	190.50	3.012	76.50	2.331	59.20	127.20	565.80	28.34	4.96	C2409-207-7500-S	3.798	96.46	91.24	405.85	24.64	4.31
C2409-207-8000-M	2.409	61.19	0.207	5.26	8.000	203.20	3.195	81.15	2.464	62.59	127.20	565.80	26.47	4.63	C2409-207-8000-S	4.036	102.52	91.24	405.85	23.02	4.03
C2409-207-8500-M	2.409	61.19	0.207	5.26	8.500	215.90	3.378	85.81	2.598	65.99	127.20	565.80	24.83	4.35	C2409-207-8500-S	4.275	108.59	91.24	405.85	21.60	3.78
C2409-207-9000-M*	2.409	61.19	0.207	5.26	9.000	228.60	3.693	93.79	2.894	73.50	127.20	565.80	23.97	4.19	C2409-207-9000-S*	4.622	117.40	91.24	405.85	20.84	3.65
C2409-207-9500-M*	2.409	61.19	0.207	5.26	9.500	241.30	3.876	98.45	3.028	76.90	127.20	565.80	22.62	3.96	C2409-207-9500-S*	4.861	123.46	91.24	405.85	19.67	3.44
C2409-225-3500-M	2.409	61.19	0.225	5.72	3.500	88.90	1.676	42.58	1.422	36.13	160.41	713.54	87.96	15.39	C2409-225-3500-S	2.016	51.21	113.51	504.94	76.49	13.39
C2409-225-3750-M	2.409	61.19	0.225	5.72	3.750	95.25	1.777	45.13	1.500	38.10	160.41	713.54	81.30	14.23	C2409-225-3750-S	2.144	54.47	113.51	504.94	70.70	12.37
C2409-225-4000-M	2.409	61.19	0.225	5.72	4.000	101.60	1.877	47.69	1.578	40.08	160.41	713.54	75.57	13.23	C2409-225-4000-S	2.273	57.73	113.51	504.94	65.72	11.50
C2409-225-4250-M	2.409	61.19	0.225	5.72	4.250	107.95	1.978	50.24	1.656	42.06	160.41	713.54	70.60	12.36	C2409-225-4250-S	2.401	60.99	113.51	504.94	61.39	10.74
C2409-225-4500-M	2.409	61.19	0.225	5.72	4.500	114.30	2.079	52.79	1.734	44.04	160.41	713.54	66.24	11.59	C2409-225-4500-S	2.529	64.25	113.51	504.94	57.60	10.08
C2409-225-4750-M	2.409	61.19	0.225	5.72	4.750	120.65	2.179	55.35	1.812	46.01	160.41	713.54	62.39	10.92	C2409-225-4750-S	2.658	67.51	113.51	504.94	54.26	9.49
C2409-225-5000-M	2.409	61.19	0.225	5.72	5.000	127.00	2.280	57.90	1.889	47.99	160.41	713.54	58.97	10.32	C2409-225-5000-S	2.786	70.77	113.51	504.94	51.27	8.97
C2409-225-5250-M	2.409	61.19	0.225	5.72	5.250	133.35	2.380	60.45	1.967	49.97	160.41	713.54	55.89	9.78	C2409-225-5250-S	2.914	74.03	113.51	504.94	48.60	8.51
C2409-225-5500-M	2.409	61.19	0.225	5.72	5.500	139.70	2.481	63.01	2.045	51.95	160.41	713.54	53.13	9.30	C2409-225-5500-S	3.043	77.29	113.51	504.94	46.20	8.08
C2409-225-5750-M	2.409	61.19	0.225	5.72	5.750	146.05	2.581	65.56	2.123	53.93	160.41	713.54	50.62	8.86	C2409-225-5750-S	3.171	80.55	113.51	504.94	44.02	7.70
C2409-225-6000-M	2.409	61.19	0.225	5.72	6.000	152.40	2.682	68.11	2.201	55.90	160.41	713.54	48.34	8.46	C2409-225-6000-S	3.300	83.81	113.51	504.94	42.04	7.36
C2409-225-6250-M	2.409	61.19	0.225	5.72	6.250	158.75	2.782	70.67	2.279	57.88	160.41	713.54	46.26	8.09	C2409-225-6250-S	3.428	87.07	113.51	504.94	40.22	7.04
C2409-225-6500-M	2.409	61.19	0.225	5.72	6.500	165.10	2.883	73.22	2.357	59.86	160.41	713.54	44.35	7.76	C2409-225-6500-S	3.556	90.33	113.51	504.94	38.56	6.75
C2409-225-6750-M	2.409	61.19	0.225	5.72	6.750	171.45	2.983	75.77	2.434	61.84	160.41	713.54	42.59	7.45	C2409-225-6750-S	3.685	93.59	113.51	504.94	37.03	6.48
C2409-225-7000-M	2.409	61.19	0.225	5.72	7.000	177.80	3.084	78.33	2.512	63.81	160.41	713.54	40.96	7.17	C2409-225-7000-S	3.813	96.85	113.51	504.94	35.62	6.23
C2409-225-7500-M*	2.409	61.19	0.225	5.72	7.500	190.50	3.419	86.85	2.834	71.99	160.41	713.54	39.31	6.88	C2409-225-7500-S*	4.179	106.15	113.51	504.94	34.18	5.98
C2409-225-8000-M*	2.409	61.19	0.225	5.72	8.000	203.20	3.620	91.96	2.990	75.94	160.41	713.54	36.63	6.41	C2409-225-8000-S*	4.436	112.67	113.51	504.94	31.85	5.57
C2409-225-8500-M*	2.409	61.19	0.225	5.72	8.500	215.90	3.821	97.07	3.146	79.90	160.41	713.54	34.29	6.00	C2409-225-8500-S*	4.693	119.19	113.51	504.94	29.81	5.22
C2409-225-9000-M*	2.409	61.19	0.225	5.72	9.000	228.60	4.023	102.17	3.301	83.85	160.41	713.54	32.23	5.64	C2409-225-9000-S*	4.949	125.71	113.51	504.94	28.02	4.90
C2409-225-9500-M*	2.409	61.19	0.225	5.72	9.500	241.30	4.224	107.28	3.457	87.81	160.41	713.54	30.40	5.32	C2409-225-9500-S*	5.206	132.23	113.51	504.94	26.44	4.63
C2409-250-3500-M	2.409	61.19	0.250	6.35	3.500	88.90	1.857	47.16	1.645	41.78	214.93	956.05	130.78	22.89	C2409-250-3500-S	2.187	55.55	149.31	664.16	113.72	19.90
C2409-250-3750-M	2.409	61.19	0.250	6.35	3.750	95.25	1.970	50.03	1.738	44.15	214.93	956.05	120.72	21.13	C2409-250-3750-S	2.328	59.12	149.31	664.16	104.98	18.37
C2409-250-4000-M	2.409	61.19	0.250	6.35	4.000	101.60	2.083	52.90	1.832	46.52	214.93	956.05	112.10	19.62	C2409-250-4000-S	2.468	62.69	149.31	664.16	97.48	17.06

Part Numbers with an "*" are squared and not ground. **Part Numbers in bold** represent the newly expanded Associated Spring RAYMOND compression spring offering.

MUSIC WIRE															STAINLESS STEEL					
Catalog #	Outside Diameter (OD)		Wire Diameter (d)		Free Length (L) Approx		Load Length (L_1)		Solid Height (Sh) Approx		Load (P) at L_1		Spring Rate (R)		Catalog #	Load Length (L_1)		Load (P) at L_1		Spring Rate (R)	
	in	mm	in	mm	in	mm	in	mm	in	mm	lb	N	lb/in	N/mm		in	mm	lb	N	lb/in	N/mm
C2409-250-4250-M	2.409	61.19	0.250	6.35	4.250	107.95	2.196	55.77	1.925	48.89	214.93	956.05	104.63	18.31	C2409-250-4250-S	2.609	66.27	149.31	664.16	90.98	15.92
C2409-250-4500-M	2.409	61.19	0.250	6.35	4.500	114.30	2.309	58.64	2.018	51.26	214.93	956.05	98.09	17.17	C2409-250-4500-S	2.749	69.84	149.31	664.16	85.29	14.93
C2409-250-4750-M	2.409	61.19	0.250	6.35	4.750	120.65	2.422	61.52	2.112	53.63	214.93	956.05	92.32	16.16	C2409-250-4750-S	2.890	73.41	149.31	664.16	80.28	14.05
C2409-250-5000-M	2.409	61.19	0.250	6.35	5.000	127.00	2.535	64.39	2.205	56.00	214.93	956.05	87.19	15.26	C2409-250-5000-S	3.031	76.98	149.31	664.16	75.82	13.27
C2409-250-5250-M	2.409	61.19	0.250	6.35	5.250	133.35	2.648	67.26	2.298	58.37	214.93	956.05	82.60	14.46	C2409-250-5250-S	3.171	80.55	149.31	664.16	71.83	12.57
C2409-250-5500-M	2.409	61.19	0.250	6.35	5.500	139.70	2.761	70.13	2.392	60.75	214.93	956.05	78.47	13.73	C2409-250-5500-S	3.312	84.12	149.31	664.16	68.23	11.94
C2409-250-5750-M	2.409	61.19	0.250	6.35	5.750	146.05	2.874	73.00	2.485	63.12	214.93	956.05	74.73	13.08	C2409-250-5750-S	3.452	87.69	149.31	664.16	64.99	11.37
C2409-250-6000-M	2.409	61.19	0.250	6.35	6.000	152.40	2.987	75.87	2.578	65.49	214.93	956.05	71.34	12.48	C2409-250-6000-S	3.593	91.26	149.31	664.16	62.03	10.86
C2409-250-6250-M	2.409	61.19	0.250	6.35	6.250	158.75	3.100	78.74	2.672	67.86	214.93	956.05	68.23	11.94	C2409-250-6250-S	3.734	94.83	149.31	664.16	59.33	10.38
C2409-250-6500-M	2.409	61.19	0.250	6.35	6.500	165.10	3.213	81.62	2.765	70.23	214.93	956.05	65.39	11.44	C2409-250-6500-S	3.874	98.40	149.31	664.16	56.86	9.95
C2409-250-6750-M	2.409	61.19	0.250	6.35	6.750	171.45	3.326	84.49	2.858	72.60	214.93	956.05	62.78	10.99	C2409-250-6750-S	4.015	101.98	149.31	664.16	54.59	9.55
C2409-250-7000-M*	2.409	61.19	0.250	6.35	7.000	177.80	3.576	90.84	3.121	79.27	214.93	956.05	62.78	10.99	C2409-250-7000-S*	4.265	108.33	149.31	664.16	54.59	9.55
C2409-250-7500-M*	2.409	61.19	0.250	6.35	7.500	190.50	3.802	96.58	3.307	84.01	214.93	956.05	58.13	10.17	C2409-250-7500-S*	4.546	115.47	149.31	664.16	50.54	8.85
C2409-250-8000-M*	2.409	61.19	0.250	6.35	8.000	203.20	4.028	102.32	3.494	88.75	214.93	956.05	54.12	9.47	C2409-250-8000-S*	4.827	122.61	149.31	664.16	47.06	8.24
C2409-250-8500-M*	2.409	61.19	0.250	6.35	8.500	215.90	4.255	108.07	3.681	93.49	214.93	956.05	50.63	8.86	C2409-250-8500-S*	5.108	129.75	149.31	664.16	44.02	7.70
C2409-250-9000-M*	2.409	61.19	0.250	6.35	9.000	228.60	4.481	113.81	3.867	98.23	214.93	956.05	47.56	8.32	C2409-250-9000-S*	5.390	136.89	149.31	664.16	41.35	7.24
C2409-250-9500-M*	2.409	61.19	0.250	6.35	9.500	241.30	4.707	119.55	4.054	102.97	214.93	956.05	44.84	7.85	C2409-250-9500-S*	5.671	144.04	149.31	664.16	38.99	6.82
C2468-192-4250-M	2.468	62.69	0.192	4.88	4.250	107.95	1.659	42.14	1.262	32.05	100.78	448.27	38.90	6.81	C2468-192-4250-S	2.088	53.04	73.12	325.24	33.82	5.92
C2468-192-4500-M	2.468	62.69	0.192	4.88	4.500	114.30	1.742	44.24	1.318	33.46	100.78	448.27	36.53	6.39	C2468-192-4500-S	2.198	55.84	73.12	325.24	31.77	5.56
C2468-192-4750-M	2.468	62.69	0.192	4.88	4.750	120.65	1.824	46.33	1.373	34.88	100.78	448.27	34.44	6.03	C2468-192-4750-S	2.309	58.64	73.12	325.24	29.95	5.24
C2468-192-5000-M	2.468	62.69	0.192	4.88	5.000	127.00	1.906	48.42	1.429	36.29	100.78	448.27	32.58	5.70	C2468-192-5000-S	2.419	61.44	73.12	325.24	28.33	4.96
C2468-192-5250-M	2.468	62.69	0.192	4.88	5.250	133.35	1.989	50.52	1.484	37.70	100.78	448.27	30.90	5.41	C2468-192-5250-S	2.529	64.24	73.12	325.24	26.87	4.70
C2468-192-5500-M	2.468	62.69	0.192	4.88	5.500	139.70	2.071	52.61	1.540	39.11	100.78	448.27	29.39	5.14	C2468-192-5500-S	2.639	67.04	73.12	325.24	25.56	4.47
C2468-192-5750-M	2.468	62.69	0.192	4.88	5.750	146.05	2.154	54.71	1.595	40.52	100.78	448.27	28.02	4.90	C2468-192-5750-S	2.749	69.84	73.12	325.24	24.37	4.26
C2468-192-6000-M	2.468	62.69	0.192	4.88	6.000	152.40	2.236	56.80	1.651	41.93	100.78	448.27	26.78	4.69	C2468-192-6000-S	2.860	72.63	73.12	325.24	23.28	4.07
C2468-192-6250-M	2.468	62.69	0.192	4.88	6.250	158.75	2.319	58.90	1.706	43.34	100.78	448.27	25.63	4.49	C2468-192-6250-S	2.970	75.43	73.12	325.24	22.29	3.90
C2468-192-6500-M	2.468	62.69	0.192	4.88	6.500	165.10	2.401	60.99	1.762	44.75	100.78	448.27	24.59	4.30	C2468-192-6500-S	3.080	78.23	73.12	325.24	21.38	3.74
C2468-192-6750-M	2.468	62.69	0.192	4.88	6.750	171.45	2.484	63.09	1.817	46.16	100.78	448.27	23.62	4.13	C2468-192-6750-S	3.190	81.03	73.12	325.24	20.54	3.59
C2468-192-7000-M	2.468	62.69	0.192	4.88	7.000	177.80	2.566	65.18	1.873	47.57	100.78	448.27	22.73	3.98	C2468-192-7000-S	3.300	83.83	73.12	325.24	19.76	3.46
C2468-192-7500-M	2.468	62.69	0.192	4.88	7.500	190.50	2.731	69.37	1.984	50.39	100.78	448.27	21.13	3.70	C2468-192-7500-S	3.521	89.43	73.12	325.24	18.38	3.22
C2468-192-8000-M	2.468	62.69	0.192	4.88	8.000	203.20	2.896	73.56	2.095	53.21	100.78	448.27	19.74	3.46	C2468-192-8000-S	3.741	95.03	73.12	325.24	17.17	3.00
C2468-192-8500-M	2.468	62.69	0.192	4.88	8.500	215.90	3.061	77.75	2.206	56.03	100.78	448.27	18.53	3.24	C2468-192-8500-S	3.962	100.63	73.12	325.24	16.11	2.82
C2468-192-9000-M	2.468	62.69	0.192	4.88	9.000	228.60	3.226	81.93	2.317	58.86	100.78	448.27	17.45	3.05	C2468-192-9000-S	4.182	106.22	73.12	325.24	15.18	2.66
C2468-192-9500-M	2.468	62.69	0.192	4.88	9.500	241.30	3.391	86.12	2.428	61.68	100.78	448.27	16.50	2.89	C2468-192-9500-S	4.402	111.82	73.12	325.24	14.34	2.51
C2468-207-4000-M	2.468	62.69	0.207	5.26	4.000	101.60	1.697	43.09	1.355	34.41	124.29	552.85	53.96	9.44	C2468-207-4000-S	2.100	53.34	89.15	396.57	46.92	8.21
C2468-207-4250-M	2.468	62.69	0.207	5.26	4.250	107.95	1.786	45.36	1.419	36.03	124.29	552.85	50.44	8.83	C2468-207-4250-S	2.217	56.32	89.15	396.57	43.86	7.68
C2468-207-4500-M	2.468	62.69	0.207	5.26	4.500	114.30	1.875	47.63	1.483	37.66	124.29	552.85	47.35	8.29	C2468-207-4500-S	2.335	59.31	89.15	396.57	41.18	7.21
C2468-207-4750-M	2.468	62.69	0.207	5.26	4.750	120.65	1.965	49.90	1.547	39.29	124.29	552.85	44.62	7.81	C2468-207-4750-S	2.452	62.29	89.15	396.57	38.80	6.79
C2468-207-5000-M	2.468	62.69	0.207	5.26	5.000	127.00	2.054	52.18	1.611	40.92	124.29	552.85	42.19	7.38	C2468-207-5000-S	2.570	65.28	89.15	396.57	36.69	6.42
C2468-207-5250-M	2.468	62.69	0.207	5.26	5.250	133.35	2.144	54.45	1.675	42.55	124.29	552.85	40.01	7.00	C2468-207-5250-S	2.687	68.26	89.15	396.57	34.79	6.09
C2468-207-5500-M	2.468	62.69	0.207	5.26	5.500	139.70	2.233	56.72	1.739	44.18	124.29	552.85	38.04	6.66	C2468-207-5500-S	2.805	71.25	89.15	396.57	33.08	5.79
C2468-207-5750-M	2.468	62.69	0.207	5.26	5.750	146.05	2.322	58.99	1.803	45.81	124.29	552.85	36.26	6.35	C2468-207-5750-S	2.923	74.23	89.15	396.57	31.53	5.52
C2468-207-6000-M	2.468	62.69	0.207	5.26	6.000	152.40	2.412	61.26	1.868	47.44	124.29	552.85	34.64	6.06	C2468-207-6000-S	3.040	77.22	89.15	396.57	30.12	5.27
C2468-207-6250-M	2.468	62.69	0.207	5.26	6.250	158.75	2.501	63.53	1.932	49.06	124.29	552.85	33.15	5.80	C2468-207-6250-S	3.158	80.20	89.15	396.57	28.83	5.05
C2468-207-6500-M	2.468	62.69	0.207	5.26	6.500	165.10	2.591	65.80	1.996	50.69	124.29	552.85	31.79	5.56	C2468-207-6500-S	3.275	83.19	89.15	396.57	27.65	4.84
C2468-207-6750-M	2.468	62.69	0.207	5.26	6.750	171.45	2.680	68.07	2.060	52.32	124.29	552.85	30.54	5.34	C2468-207-6750-S	3.393	86.17	89.15	396.57	26.55	4.65
C2468-207-7000-M	2.468	62.69	0.207	5.26	7.000	177.80	2.769	70.34	2.124	53.95	124.29	552.85	29.38	5.14	C2468-207-7000-S	3.510	89.16	89.15	396.57	25.55	4.47
C2468-207-7500-M	2.468	62.69	0.207	5.26	7.500	190.50	2.948	74.89	2.252	57.21	124.29	552.85	27.31	4.78	C2468-207-7500-S	3.745	95.13	89.15	396.57	23.74	4.16
C2468-207-8000-M	2.468	62.69	0.207	5.26	8.000	203.20	3.127	79.43	2.381	60.47	124.29	552.85	25.51	4.46	C2468-207-8000-S	3.980	101.10	89.15	396.57	22.18	3.88
C2468-207-8500-M	2.468	62.69	0.207	5.26	8.500	215.90	3.306	83.97	2.509	63.72	124.29	552.85	23.93	4.19	C2468-207-8500-S	4.215	107.07	89.15	396.57	20.81	3.64
C2468-207-9000-M	2.468	62.69	0.207	5.26	9.000	228.60	3.485	88.51	2.637	66.98	124.29	552.85	22.54	3.94	C2468-207-9000-S	4.450	113.04	89.15	396.57	19.60	3.43
C2468-207-9500-M*	2.468	62.69	0.207	5.26	9.500	241.30	3.797	96.43	2.930	74.41	124.29	552.85	21.79	3.81	C2468-207-9500-S*	4.795	121.80	89.15	396.57	18.95	3.32
C2468-225-3750-M	2.468	62.69	0.225	5.72	3.750	95.25	1.744	44.30	1.459	37.07	156.76	697.31	78.15	13.68	C2468-225-3750-S	2.118	53.78	110.93	493.45	67.95	11.89
C2468-225-4000-M	2.468	62.69	0.225	5.72	4.000	101.60	1.842	46.79	1.534	38.97	156.76	697.31	72.64	12.71	C2468-225-4000-S	2.244	56.99	110.93	493.45	63.17	11.05
C2468-225-4250-M	2.468	62.69	0.225	5.72	4.250	107.95	1.940	49.28	1.609	40.87	156.76	697.31	67.86	11.88	C2468-225-4250-S	2.370	60.20	110.93	493.45	59.01	10.33
C2468-225-4500-M	2.468	62.69	0.225	5.72	4.500	114.30	2.038	51.77	1.684	42.77	156.76	697.31	63.67	11.14	C2468-225-4500-S	2.496	63.41	110.93	493.45	55.37	9.69
C2468-225-4750-M	2.468	62.69	0.225	5.72	4.750	120.65	2.136	54.26	1.759	44.67	156.76	697.31	59.97	10.50	C2468-225-4750-S	2.623	66.62	110.93	493.45	52.15	9.13
C2468-225-5000-M	2.468	62.69	0.225	5.72	5.000	127.00	2.234	56.75	1.833	46.57	156.76	697.31	56.68	9.92	C2468-225-5000-S	2.749	69.83	110.93	493.45	49.28	8.62
C2468-225-5250-M	2.468	62.69	0.225	5.72	5.250	133.35	2.332	59.24	1.908	48.47	156.76	697.31	53.73	9.40	C2468-225-5250-S	2.875	73.04	110.93	493.45	46.72	8.18
C2468-225-5500-M	2.468	62.69	0.225	5.72	5.500	139.70	2.430	61.73	1.983	50.37	156.76	697.31	51.07	8.94	C2468-225-5500-S	3.002	76.25	110.93	493.45	44.41	7.77
C2468-225-5750-M	2.468	62.69	0.225	5.72	5.750	146.05	2.528	64.22	2.058	52.27	156.76	697.31	48.66	8.51	C2468-225-5750-S	3.128	79.45	110.93	493.45	42.31	7.40
C2468-225-6000-M	2.468	62.69	0.225	5.72	6.000	152.40	2.626	66.71	2.132	54.16	156.76	697.31	46.47	8.13	C2468-225-6000-S	3.254	82.66	110.93	493.45	40.40	7.07
C2468-225-6250-M	2.468	62.69	0.225	5.72	6.250	158.75	2.724	69.20	2.207	56.06	156.76	697.31	44.46	7.78	C2468-225-6250-S	3.381	85.87	110.93	493.45	38.66	6.77
C2468-225-6500-M	2.468	62.69	0.225	5.72	6.500	165.10	2.822	71.69	2.282	57.96	156.76	697.31	42.63	7.46	C2468-225-6500-S	3.507	89.08	110.93	493.45	37.07	6.49

FOR INFORMATION ON ALTERNATIVE FINISHES, SEE PAGE 311

Part Numbers with an "*" are squared and not ground. **Part Numbers in bold** represent the newly expanded Associated Spring RAYMOND compression spring offering.

MUSIC WIRE																STAINLESS STEEL						
Catalog #	Outside Diameter (OD)		Wire Diameter (d)		Free Length (L) Approx		Load Length (L_1)		Solid Height (Sh) Approx		Load (P) at L_1		Spring Rate (R)		Catalog #	Load Length (L_1)		Load (P) at L_1		Spring Rate (R)	
	in	mm	in	mm	in	mm	in	mm	in	mm	lb	N	lb/in	N/mm		in	mm	lb	N	lb/in	N/mm
C2468-225-6750-M	2.468	62.69	0.225	5.72	6.750	171.45	2.920	74.18	2.357	59.86	156.76	697.31	40.93	7.16	**C2468-225-6750-S**	3.633	92.29	110.93	493.45	35.59	6.23
C2468-225-7000-M	2.468	62.69	0.225	5.72	7.000	177.80	3.018	76.67	2.432	61.76	156.76	697.31	39.37	6.89	**C2468-225-7000-S**	3.760	95.50	110.93	493.45	34.24	5.99
C2468-225-7500-M*	2.468	62.69	0.225	5.72	7.500	190.50	3.351	85.12	2.750	69.85	156.76	697.31	37.79	6.61	**C2468-225-7500-S***	4.124	104.74	110.93	493.45	32.86	5.75
C2468-225-8000-M*	2.468	62.69	0.225	5.72	8.000	203.20	3.547	90.10	2.900	73.65	156.76	697.31	35.21	6.16	**C2468-225-8000-S***	4.376	111.16	110.93	493.45	30.61	5.36
C2468-225-8500-M*	2.468	62.69	0.225	5.72	8.500	215.90	3.743	95.08	3.049	77.45	156.76	697.31	32.96	5.77	**C2468-225-8500-S***	4.629	117.58	110.93	493.45	28.66	5.01
C2468-225-9000-M*	2.468	62.69	0.225	5.72	9.000	228.60	3.939	100.06	3.199	81.25	156.76	697.31	30.98	5.42	**C2468-225-9000-S***	4.882	123.99	110.93	493.45	26.94	4.71
C2468-225-9500-M*	2.468	62.69	0.225	5.72	9.500	241.30	4.135	105.04	3.348	85.04	156.76	697.31	29.22	5.11	**C2468-225-9500-S***	5.134	130.41	110.93	493.45	25.41	4.45
C2468-250-3500-M	2.468	62.69	0.250	6.35	3.500	88.90	1.823	46.30	1.603	40.73	210.08	934.48	125.27	21.92	**C2468-250-3500-S**	2.160	54.87	145.94	649.18	108.93	19.06
C2468-250-3750-M	2.468	62.69	0.250	6.35	3.750	95.25	1.933	49.10	1.693	43.01	210.08	934.48	115.63	20.24	**C2468-250-3750-S**	2.299	58.38	145.94	649.18	100.55	17.60
C2468-250-4000-M	2.468	62.69	0.250	6.35	4.000	101.60	2.043	51.90	1.783	45.29	210.08	934.48	107.37	18.79	**C2468-250-4000-S**	2.437	61.90	145.94	649.18	93.37	16.34
C2468-250-4250-M	2.468	62.69	0.250	6.35	4.250	107.95	2.154	54.70	1.873	47.57	210.08	934.48	100.22	17.54	**C2468-250-4250-S**	2.575	65.41	145.94	649.18	87.14	15.25
C2468-250-4500-M	2.468	62.69	0.250	6.35	4.500	114.30	2.264	57.50	1.963	49.86	210.08	934.48	93.95	16.44	**C2468-250-4500-S**	2.714	68.93	145.94	649.18	81.70	14.30
C2468-250-4750-M	2.468	62.69	0.250	6.35	4.750	120.65	2.374	60.30	2.053	52.14	210.08	934.48	88.43	15.47	**C2468-250-4750-S**	2.852	72.44	145.94	649.18	76.89	13.46
C2468-250-5000-M	2.468	62.69	0.250	6.35	5.000	127.00	2.484	63.11	2.143	54.42	210.08	934.48	83.51	14.61	**C2468-250-5000-S**	2.990	75.95	145.94	649.18	72.62	12.71
C2468-250-5250-M	2.468	62.69	0.250	6.35	5.250	133.35	2.595	65.91	2.232	56.70	210.08	934.48	79.12	13.85	**C2468-250-5250-S**	3.129	79.47	145.94	649.18	68.80	12.04
C2468-250-5500-M	2.468	62.69	0.250	6.35	5.500	139.70	2.705	68.71	2.322	58.99	210.08	934.48	75.16	13.15	**C2468-250-5500-S**	3.267	82.98	145.94	649.18	65.36	11.44
C2468-250-5750-M	2.468	62.69	0.250	6.35	5.750	146.05	2.815	71.51	2.412	61.27	210.08	934.48	71.58	12.53	**C2468-250-5750-S**	3.405	86.50	145.94	649.18	62.25	10.89
C2468-250-6000-M	2.468	62.69	0.250	6.35	6.000	152.40	2.925	74.31	2.502	63.55	210.08	934.48	68.33	11.96	**C2468-250-6000-S**	3.544	90.01	145.94	649.18	59.42	10.40
C2468-250-6250-M	2.468	62.69	0.250	6.35	6.250	158.75	3.036	77.11	2.592	65.83	210.08	934.48	65.36	11.44	**C2468-250-6250-S**	3.682	93.53	145.94	649.18	56.83	9.95
C2468-250-6500-M	2.468	62.69	0.250	6.35	6.500	165.10	3.146	79.91	2.682	68.12	210.08	934.48	62.63	10.96	**C2468-250-6500-S**	3.820	97.04	145.94	649.18	54.47	9.53
C2468-250-6750-M	2.468	62.69	0.250	6.35	6.750	171.45	3.256	82.71	2.772	70.40	210.08	934.48	60.13	10.52	**C2468-250-6750-S**	3.959	100.55	145.94	649.18	52.29	9.15
C2468-250-7000-M*	2.468	62.69	0.250	6.35	7.000	177.80	3.506	89.06	3.034	77.07	210.08	934.48	60.13	10.52	**C2468-250-7000-S***	4.209	106.90	145.94	649.18	52.29	9.15
C2468-250-7500-M*	2.468	62.69	0.250	6.35	7.500	190.50	3.727	94.66	3.214	81.63	210.08	934.48	55.68	9.74	**C2468-250-7500-S***	4.486	113.93	145.94	649.18	48.41	8.47
C2468-250-8000-M*	2.468	62.69	0.250	6.35	8.000	203.20	3.947	100.26	3.394	86.20	210.08	934.48	51.84	9.07	**C2468-250-8000-S***	4.762	120.96	145.94	649.18	45.07	7.89
C2468-250-8500-M*	2.468	62.69	0.250	6.35	8.500	215.90	4.168	105.86	3.573	90.76	210.08	934.48	48.49	8.49	**C2468-250-8500-S***	5.039	127.99	145.94	649.18	42.17	7.38
C2468-250-9000-M*	2.468	62.69	0.250	6.35	9.000	228.60	4.388	111.46	3.753	95.33	210.08	934.48	45.55	7.97	**C2468-250-9000-S***	5.316	135.02	145.94	649.18	39.61	6.93
C2468-250-9500-M*	2.468	62.69	0.250	6.35	9.500	241.30	4.609	117.06	3.933	99.89	210.08	934.48	42.95	7.52	**C2468-250-9500-S***	5.592	142.05	145.94	649.18	37.35	6.54
C2526-207-4000-M	2.526	64.16	0.207	5.26	4.000	101.60	1.667	42.33	1.318	33.47	121.55	540.69	52.10	9.12	**C2526-207-4000-S**	2.075	52.71	87.19	387.85	45.30	7.93
C2526-207-4250-M	2.526	64.16	0.207	5.26	4.250	107.95	1.754	44.55	1.379	35.03	121.55	540.69	48.70	8.52	**C2526-207-4250-S**	2.191	55.65	87.19	387.85	42.35	7.41
C2526-207-4500-M	2.526	64.16	0.207	5.26	4.500	114.30	1.841	46.77	1.441	36.60	121.55	540.69	45.72	8.00	**C2526-207-4500-S**	2.307	58.59	87.19	387.85	39.76	6.96
C2526-207-4750-M	2.526	64.16	0.207	5.26	4.750	120.65	1.929	48.99	1.502	38.16	121.55	540.69	43.08	7.54	**C2526-207-4750-S**	2.423	61.54	87.19	387.85	37.46	6.56
C2526-207-5000-M	2.526	64.16	0.207	5.26	5.000	127.00	2.016	51.21	1.564	39.72	121.55	540.69	40.74	7.13	**C2526-207-5000-S**	2.538	64.48	87.19	387.85	35.42	6.20
C2526-207-5250-M	2.526	64.16	0.207	5.26	5.250	133.35	2.103	53.43	1.625	41.29	121.55	540.69	38.63	6.76	**C2526-207-5250-S**	2.654	67.42	87.19	387.85	33.59	5.88
C2526-207-5500-M	2.526	64.16	0.207	5.26	5.500	139.70	2.191	55.64	1.687	42.85	121.55	540.69	36.73	6.43	**C2526-207-5500-S**	2.770	70.36	87.19	387.85	31.94	5.59
C2526-207-5750-M	2.526	64.16	0.207	5.26	5.750	146.05	2.278	57.86	1.749	44.41	121.55	540.69	35.01	6.13	**C2526-207-5750-S**	2.886	73.30	87.19	387.85	30.44	5.33
C2526-207-6000-M	2.526	64.16	0.207	5.26	6.000	152.40	2.365	60.08	1.810	45.98	121.55	540.69	33.44	5.85	**C2526-207-6000-S**	3.002	76.24	87.19	387.85	29.08	5.09
C2526-207-6250-M	2.526	64.16	0.207	5.26	6.250	158.75	2.453	62.30	1.872	47.54	121.55	540.69	32.01	5.60	**C2526-207-6250-S**	3.118	79.19	87.19	387.85	27.84	4.87
C2526-207-6500-M	2.526	64.16	0.207	5.26	6.500	165.10	2.540	64.52	1.933	49.10	121.55	540.69	30.70	5.37	**C2526-207-6500-S**	3.233	82.13	87.19	387.85	26.69	4.67
C2526-207-6750-M	2.526	64.16	0.207	5.26	6.750	171.45	2.627	66.73	1.995	50.67	121.55	540.69	29.48	5.16	**C2526-207-6750-S**	3.349	85.07	87.19	387.85	25.64	4.49
C2526-207-7000-M	2.526	64.16	0.207	5.26	7.000	177.80	2.715	68.95	2.056	52.23	121.55	540.69	28.37	4.96	**C2526-207-7000-S**	3.465	88.01	87.19	387.85	24.67	4.32
C2526-207-7500-M	2.526	64.16	0.207	5.26	7.500	190.50	2.889	73.39	2.179	55.36	121.55	540.69	26.36	4.61	**C2526-207-7500-S**	3.697	93.89	87.19	387.85	22.93	4.01
C2526-207-8000-M	2.526	64.16	0.207	5.26	8.000	203.20	3.064	77.83	2.303	58.49	121.55	540.69	24.63	4.31	**C2526-207-8000-S**	3.928	99.78	87.19	387.85	21.41	3.75
C2526-207-8500-M	2.526	64.16	0.207	5.26	8.500	215.90	3.239	82.26	2.426	61.61	121.55	540.69	23.10	4.04	**C2526-207-8500-S**	4.160	105.66	87.19	387.85	20.09	3.52
C2526-207-9000-M	2.526	64.16	0.207	5.26	9.000	228.60	3.413	86.70	2.549	64.74	121.55	540.69	21.76	3.81	**C2526-207-9000-S**	4.392	111.54	87.19	387.85	18.92	3.31
C2526-207-9500-M	2.526	64.16	0.207	5.26	9.500	241.30	3.588	91.14	2.672	67.87	121.55	540.69	20.56	3.60	**C2526-207-9500-S**	4.623	117.43	87.19	387.85	17.88	3.13
C2526-225-3750-M	2.526	64.16	0.225	5.72	3.750	95.25	1.713	43.52	1.422	36.11	153.33	682.05	75.28	13.17	**C2526-225-3750-S**	2.092	53.15	108.51	482.66	65.46	11.46
C2526-225-4000-M	2.526	64.16	0.225	5.72	4.000	101.60	1.809	45.95	1.493	37.93	153.33	682.05	69.98	12.25	**C2526-225-4000-S**	2.217	56.31	108.51	482.66	60.85	10.65
C2526-225-4250-M	2.526	64.16	0.225	5.72	4.250	107.95	1.905	48.38	1.565	39.76	153.33	682.05	65.38	11.44	**C2526-225-4250-S**	2.341	59.47	108.51	482.66	56.85	9.95
C2526-225-4500-M	2.526	64.16	0.225	5.72	4.500	114.30	2.000	50.81	1.637	41.58	153.33	682.05	61.34	10.73	**C2526-225-4500-S**	2.466	62.63	108.51	482.66	53.34	9.33
C2526-225-4750-M	2.526	64.16	0.225	5.72	4.750	120.65	2.096	53.24	1.709	43.41	153.33	682.05	57.77	10.11	**C2526-225-4750-S**	2.590	65.79	108.51	482.66	50.24	8.79
C2526-225-5000-M	2.526	64.16	0.225	5.72	5.000	127.00	2.192	55.67	1.781	45.24	153.33	682.05	54.60	9.56	**C2526-225-5000-S**	2.715	68.95	108.51	482.66	47.48	8.31
C2526-225-5250-M	2.526	64.16	0.225	5.72	5.250	133.35	2.287	58.10	1.853	47.06	153.33	682.05	51.76	9.06	**C2526-225-5250-S**	2.839	72.11	108.51	482.66	45.01	7.88
C2526-225-5500-M	2.526	64.16	0.225	5.72	5.500	139.70	2.383	60.53	1.925	48.89	153.33	682.05	49.19	8.61	**C2526-225-5500-S**	2.963	75.27	108.51	482.66	42.78	7.49
C2526-225-5750-M	2.526	64.16	0.225	5.72	5.750	146.05	2.479	62.96	1.997	50.72	153.33	682.05	46.87	8.20	**C2526-225-5750-S**	3.088	78.43	108.51	482.66	40.76	7.13
C2526-225-6000-M	2.526	64.16	0.225	5.72	6.000	152.40	2.575	65.39	2.069	52.54	153.33	682.05	44.76	7.83	**C2526-225-6000-S**	3.212	81.59	108.51	482.66	38.92	6.81
C2526-225-6250-M	2.526	64.16	0.225	5.72	6.250	158.75	2.670	67.82	2.140	54.37	153.33	682.05	42.83	7.50	**C2526-225-6250-S**	3.337	84.75	108.51	482.66	37.25	6.52
C2526-225-6500-M	2.526	64.16	0.225	5.72	6.500	165.10	2.766	70.26	2.212	56.19	153.33	682.05	41.06	7.19	**C2526-225-6500-S**	3.461	87.91	108.51	482.66	35.71	6.25
C2526-225-6750-M	2.526	64.16	0.225	5.72	6.750	171.45	2.862	72.69	2.284	58.02	153.33	682.05	39.43	6.90	**C2526-225-6750-S**	3.586	91.08	108.51	482.66	34.29	6.00
C2526-225-7000-M	2.526	64.16	0.225	5.72	7.000	177.80	2.957	75.12	2.356	59.85	153.33	682.05	37.93	6.64	**C2526-225-7000-S**	3.710	94.24	108.51	482.66	32.98	5.77
C2526-225-7500-M	2.526	64.16	0.225	5.72	7.500	190.50	3.149	79.98	2.500	63.50	153.33	682.05	35.24	6.17	**C2526-225-7500-S**	3.959	100.56	108.51	482.66	30.64	5.36
C2526-225-8000-M*	2.526	64.16	0.225	5.72	8.000	203.20	3.479	88.37	2.815	71.51	153.33	682.05	33.92	5.94	**C2526-225-8000-S***	4.321	109.75	108.51	482.66	29.49	5.16
C2526-225-8500-M*	2.526	64.16	0.225	5.72	8.500	215.90	3.670	93.23	2.959	75.16	153.33	682.05	31.75	5.56	**C2526-225-8500-S***	4.570	116.07	108.51	482.66	27.61	4.83
C2526-225-9000-M*	2.526	64.16	0.225	5.72	9.000	228.60	3.862	98.09	3.103	78.81	153.33	682.05	29.84	5.22	**C2526-225-9000-S***	4.819	122.39	108.51	482.66	25.95	4.54
C2526-225-9500-M*	2.526	64.16	0.225	5.72	9.500	241.30	4.053	102.95	3.247	82.46	153.33	682.05	28.15	4.93	**C2526-225-9500-S***	5.067	128.71	108.51	482.66	24.48	4.28

Part Numbers with an "*" are squared and not ground. **Part Numbers in bold** represent the newly expanded Associated Spring RAYMOND compression spring offering.

MUSIC WIRE														
Catalog #	Outside Diameter (OD)		Wire Diameter (d)		Free Length (L) Approx		Load Length (L_1)		Solid Height (Sh) Approx		Load (P) at L_1		Spring Rate (R)	
	in	mm	in	mm	in	mm	in	mm	in	mm	lb	N	lb/in	N/mm
C2526-250-3750-M	2.526	64.16	0.250	6.35	3.750	95.25	1.899	48.23	1.651	41.93	205.52	914.19	111.03	19.43
C2526-250-4000-M	2.526	64.16	0.250	6.35	4.000	101.60	2.007	50.97	1.738	44.13	205.52	914.19	103.10	18.04
C2526-250-4250-M	2.526	64.16	0.250	6.35	4.250	107.95	2.114	53.70	1.824	46.33	205.52	914.19	96.23	16.84
C2526-250-4500-M	2.526	64.16	0.250	6.35	4.500	114.30	2.222	56.44	1.911	48.53	205.52	914.19	90.21	15.79
C2526-250-4750-M	2.526	64.16	0.250	6.35	4.750	120.65	2.329	59.17	1.997	50.73	205.52	914.19	84.91	14.86
C2526-250-5000-M	2.526	64.16	0.250	6.35	5.000	127.00	2.437	61.90	2.084	52.93	205.52	914.19	80.19	14.03
C2526-250-5250-M	2.526	64.16	0.250	6.35	5.250	133.35	2.545	64.64	2.171	55.13	205.52	914.19	75.97	13.29
C2526-250-5500-M	2.526	64.16	0.250	6.35	5.500	139.70	2.652	67.37	2.257	57.33	205.52	914.19	72.17	12.63
C2526-250-5750-M	2.526	64.16	0.250	6.35	5.750	146.05	2.760	70.10	2.344	59.53	205.52	914.19	68.73	12.03
C2526-250-6000-M	2.526	64.16	0.250	6.35	6.000	152.40	2.868	72.84	2.431	61.73	205.52	914.19	65.61	11.48
C2526-250-6250-M	2.526	64.16	0.250	6.35	6.250	158.75	2.975	75.57	2.517	63.93	205.52	914.19	62.76	10.98
C2526-250-6500-M	2.526	64.16	0.250	6.35	6.500	165.10	3.083	78.30	2.604	66.13	205.52	914.19	60.14	10.52
C2526-250-6750-M	2.526	64.16	0.250	6.35	6.750	171.45	3.190	81.04	2.690	68.33	205.52	914.19	57.74	10.10
C2526-250-7000-M*	2.526	64.16	0.250	6.35	7.000	177.80	3.440	87.39	2.953	75.00	205.52	914.19	57.74	10.10
C2526-250-7500-M*	2.526	64.16	0.250	6.35	7.500	190.50	3.656	92.85	3.126	79.40	205.52	914.19	53.46	9.36
C2526-250-8000-M*	2.526	64.16	0.250	6.35	8.000	203.20	3.871	98.32	3.299	83.80	205.52	914.19	49.77	8.71
C2526-250-8500-M*	2.526	64.16	0.250	6.35	8.500	215.90	4.086	103.79	3.473	88.20	205.52	914.19	46.56	8.15
C2526-250-9000-M*	2.526	64.16	0.250	6.35	9.000	228.60	4.301	109.25	3.646	92.60	205.52	914.19	43.74	7.65
C2526-250-9500-M*	2.526	64.16	0.250	6.35	9.500	241.30	4.517	114.72	3.819	97.00	205.52	914.19	41.24	7.22
C2585-207-4250-M	2.585	65.66	0.207	5.26	4.250	107.95	1.723	43.77	1.341	34.07	118.89	528.85	47.05	8.23
C2585-207-4500-M	2.585	65.66	0.207	5.26	4.500	114.30	1.809	45.94	1.400	35.57	118.89	528.85	44.18	7.73
C2585-207-4750-M	2.585	65.66	0.207	5.26	4.750	120.65	1.894	48.11	1.459	37.07	118.89	528.85	41.63	7.28
C2585-207-5000-M	2.585	65.66	0.207	5.26	5.000	127.00	1.979	50.27	1.519	38.57	118.89	528.85	39.36	6.89
C2585-207-5250-M	2.585	65.66	0.207	5.26	5.250	133.35	2.065	52.44	1.578	40.07	118.89	528.85	37.32	6.53
C2585-207-5500-M	2.585	65.66	0.207	5.26	5.500	139.70	2.150	54.61	1.637	41.57	118.89	528.85	35.49	6.21
C2585-207-5750-M	2.585	65.66	0.207	5.26	5.750	146.05	2.235	56.78	1.696	43.07	118.89	528.85	33.83	5.92
C2585-207-6000-M	2.585	65.66	0.207	5.26	6.000	152.40	2.321	58.94	1.755	44.57	118.89	528.85	32.31	5.65
C2585-207-6250-M	2.585	65.66	0.207	5.26	6.250	158.75	2.406	61.11	1.814	46.08	118.89	528.85	30.93	5.41
C2585-207-6500-M	2.585	65.66	0.207	5.26	6.500	165.10	2.491	63.28	1.873	47.58	118.89	528.85	29.66	5.19
C2585-207-6750-M	2.585	65.66	0.207	5.26	6.750	171.45	2.577	65.45	1.932	49.08	118.89	528.85	28.49	4.99
C2585-207-7000-M	2.585	65.66	0.207	5.26	7.000	177.80	2.662	67.61	1.991	50.58	118.89	528.85	27.41	4.80
C2585-207-7500-M	2.585	65.66	0.207	5.26	7.500	190.50	2.833	71.95	2.109	53.58	118.89	528.85	25.47	4.46
C2585-207-8000-M	2.585	65.66	0.207	5.26	8.000	203.20	3.003	76.28	2.228	56.58	118.89	528.85	23.79	4.16
C2585-207-8500-M	2.585	65.66	0.207	5.26	8.500	215.90	3.174	80.62	2.346	59.58	118.89	528.85	22.32	3.91
C2585-207-9000-M	2.585	65.66	0.207	5.26	9.000	228.60	3.345	84.95	2.464	62.58	118.89	528.85	21.02	3.68
C2585-207-9500-M	2.585	65.66	0.207	5.26	9.500	241.30	3.515	89.29	2.582	65.59	118.89	528.85	19.87	3.48
C2585-225-4000-M	2.585	65.66	0.225	5.72	4.000	101.60	1.777	45.14	1.454	36.93	149.99	667.19	67.47	11.81
C2585-225-4250-M	2.585	65.66	0.225	5.72	4.250	107.95	1.870	47.51	1.523	38.69	149.99	667.19	63.03	11.03
C2585-225-4500-M	2.585	65.66	0.225	5.72	4.500	114.30	1.964	49.88	1.592	40.44	149.99	667.19	59.14	10.35
C2585-225-4750-M	2.585	65.66	0.225	5.72	4.750	120.65	2.057	52.26	1.661	42.20	149.99	667.19	55.70	9.75
C2585-225-5000-M	2.585	65.66	0.225	5.72	5.000	127.00	2.151	54.63	1.730	43.95	149.99	667.19	52.64	9.21
C2585-225-5250-M	2.585	65.66	0.225	5.72	5.250	133.35	2.244	57.00	1.799	45.71	149.99	667.19	49.90	8.73
C2585-225-5500-M	2.585	65.66	0.225	5.72	5.500	139.70	2.338	59.38	1.869	47.46	149.99	667.19	47.43	8.30
C2585-225-5750-M	2.585	65.66	0.225	5.72	5.750	146.05	2.431	61.75	1.938	49.22	149.99	667.19	45.19	7.91
C2585-225-6000-M	2.585	65.66	0.225	5.72	6.000	152.40	2.525	64.12	2.007	50.97	149.99	667.19	43.16	7.55
C2585-225-6250-M	2.585	65.66	0.225	5.72	6.250	158.75	2.618	66.50	2.076	52.73	149.99	667.19	41.30	7.23
C2585-225-6500-M	2.585	65.66	0.225	5.72	6.500	165.10	2.711	68.87	2.145	54.48	149.99	667.19	39.59	6.93
C2585-225-6750-M	2.585	65.66	0.225	5.72	6.750	171.45	2.805	71.25	2.214	56.24	149.99	667.19	38.02	6.65
C2585-225-7000-M	2.585	65.66	0.225	5.72	7.000	177.80	2.898	73.62	2.283	58.00	149.99	667.19	36.57	6.40
C2585-225-7500-M	2.585	65.66	0.225	5.72	7.500	190.50	3.085	78.37	2.422	61.51	149.99	667.19	33.98	5.95
C2585-225-8000-M	2.585	65.66	0.225	5.72	8.000	203.20	3.272	83.11	2.560	65.02	149.99	667.19	31.73	5.55
C2585-225-8500-M*	2.585	65.66	0.225	5.72	8.500	215.90	3.600	91.44	2.872	72.95	149.99	667.19	30.61	5.36
C2585-225-9000-M*	2.585	65.66	0.225	5.72	9.000	228.60	3.787	96.19	3.010	76.46	149.99	667.19	28.77	5.04
C2585-225-9500-M*	2.585	65.66	0.225	5.72	9.500	241.30	3.974	100.93	3.148	79.97	149.99	667.19	27.14	4.75
C2585-250-3750-M	2.585	65.66	0.250	6.35	3.750	95.25	1.866	47.39	1.610	40.89	201.08	894.43	106.72	18.68
C2585-250-4000-M	2.585	65.66	0.250	6.35	4.000	101.60	1.971	50.06	1.693	43.01	201.08	894.43	99.09	17.34
C2585-250-4250-M	2.585	65.66	0.250	6.35	4.250	107.95	2.076	52.73	1.777	45.13	201.08	894.43	92.49	16.19
C2585-250-4500-M	2.585	65.66	0.250	6.35	4.500	114.30	2.181	55.40	1.860	47.25	201.08	894.43	86.71	15.17
C2585-250-4750-M	2.585	65.66	0.250	6.35	4.750	120.65	2.286	58.07	1.944	49.37	201.08	894.43	81.61	14.28
C2585-250-5000-M	2.585	65.66	0.250	6.35	5.000	127.00	2.391	60.73	2.027	51.49	201.08	894.43	77.07	13.49
C2585-250-5250-M	2.585	65.66	0.250	6.35	5.250	133.35	2.496	63.40	2.111	53.61	201.08	894.43	73.02	12.78
C2585-250-5500-M	2.585	65.66	0.250	6.35	5.500	139.70	2.601	66.07	2.194	55.73	201.08	894.43	69.37	12.14
C2585-250-5750-M	2.585	65.66	0.250	6.35	5.750	146.05	2.706	68.74	2.278	57.85	201.08	894.43	66.06	11.56
C2585-250-6000-M	2.585	65.66	0.250	6.35	6.000	152.40	2.811	71.41	2.361	59.97	201.08	894.43	63.06	11.04

STAINLESS STEEL						
Catalog #	Load Length (L_1)		Load (P) at L_1		Spring Rate (R)	
	in	mm	lb	N	lb/in	N/mm
C2526-250-3750-S	2.271	57.69	142.77	635.08	96.55	16.90
C2526-250-4000-S	2.407	61.15	142.77	635.08	89.65	15.69
C2526-250-4250-S	2.544	64.61	142.77	635.08	83.68	14.64
C2526-250-4500-S	2.680	68.07	142.77	635.08	78.45	13.73
C2526-250-4750-S	2.816	71.53	142.77	635.08	73.83	12.92
C2526-250-5000-S	2.952	74.99	142.77	635.08	69.73	12.20
C2526-250-5250-S	3.089	78.45	142.77	635.08	66.06	11.56
C2526-250-5500-S	3.225	81.91	142.77	635.08	62.76	10.98
C2526-250-5750-S	3.361	85.38	142.77	635.08	59.77	10.46
C2526-250-6000-S	3.497	88.84	142.77	635.08	57.05	9.98
C2526-250-6250-S	3.634	92.30	142.77	635.08	54.57	9.55
C2526-250-6500-S	3.770	95.76	142.77	635.08	52.30	9.15
C2526-250-6750-S	3.906	99.22	142.77	635.08	50.21	8.79
C2526-250-7000-S*	4.156	105.57	142.77	635.08	50.21	8.79
C2526-250-7500-S*	4.429	112.49	142.77	635.08	46.49	8.14
C2526-250-8000-S*	4.701	119.41	142.77	635.08	43.28	7.57
C2526-250-8500-S*	4.974	126.33	142.77	635.08	40.49	7.09
C2526-250-9000-S*	5.246	133.25	142.77	635.08	38.04	6.66
C2526-250-9500-S*	5.519	140.18	142.77	635.08	35.86	6.28
C2585-207-4250-S	2.166	55.01	85.28	379.35	40.92	7.16
C2585-207-4500-S	2.280	57.91	85.28	379.35	38.41	6.72
C2585-207-4750-S	2.394	60.81	85.28	379.35	36.20	6.33
C2585-207-5000-S	2.508	63.71	85.28	379.35	34.23	5.99
C2585-207-5250-S	2.622	66.61	85.28	379.35	32.46	5.68
C2585-207-5500-S	2.737	69.51	85.28	379.35	30.86	5.40
C2585-207-5750-S	2.851	72.41	85.28	379.35	29.41	5.15
C2585-207-6000-S	2.965	75.31	85.28	379.35	28.10	4.92
C2585-207-6250-S	3.079	78.21	85.28	379.35	26.89	4.71
C2585-207-6500-S	3.193	81.11	85.28	379.35	25.79	4.51
C2585-207-6750-S	3.307	84.01	85.28	379.35	24.77	4.34
C2585-207-7000-S	3.421	86.91	85.28	379.35	23.83	4.17
C2585-207-7500-S	3.650	92.71	85.28	379.35	22.15	3.88
C2585-207-8000-S	3.878	98.50	85.28	379.35	20.69	3.62
C2585-207-8500-S	4.106	104.30	85.28	379.35	19.41	3.40
C2585-207-9000-S	4.335	110.10	85.28	379.35	18.28	3.20
C2585-207-9500-S	4.563	115.90	85.28	379.35	17.27	3.02
C2585-225-4000-S	2.191	55.65	106.14	472.14	58.67	10.27
C2585-225-4250-S	2.313	58.76	106.14	472.14	54.81	9.59
C2585-225-4500-S	2.436	61.88	106.14	472.14	51.43	9.00
C2585-225-4750-S	2.559	64.99	106.14	472.14	48.44	8.48
C2585-225-5000-S	2.681	68.10	106.14	472.14	45.78	8.01
C2585-225-5250-S	2.804	71.22	106.14	472.14	43.39	7.59
C2585-225-5500-S	2.926	74.33	106.14	472.14	41.24	7.22
C2585-225-5750-S	3.049	77.45	106.14	472.14	39.30	6.88
C2585-225-6000-S	3.172	80.56	106.14	472.14	37.53	6.57
C2585-225-6250-S	3.294	83.67	106.14	472.14	35.91	6.28
C2585-225-6500-S	3.417	86.79	106.14	472.14	34.43	6.02
C2585-225-6750-S	3.539	89.90	106.14	472.14	33.06	5.79
C2585-225-7000-S	3.662	93.02	106.14	472.14	31.80	5.56
C2585-225-7500-S	3.907	99.24	106.14	472.14	29.54	5.17
C2585-225-8000-S	4.152	105.47	106.14	472.14	27.59	4.83
C2585-225-8500-S*	4.512	114.61	106.14	472.14	26.62	4.66
C2585-225-9000-S*	4.758	120.84	106.14	472.14	25.02	4.38
C2585-225-9500-S*	5.003	127.07	106.14	472.14	23.60	4.13
C2585-250-3750-S	2.245	57.02	139.69	621.35	92.80	16.24
C2585-250-4000-S	2.379	60.42	139.69	621.35	86.17	15.08
C2585-250-4250-S	2.513	63.83	139.69	621.35	80.42	14.07
C2585-250-4500-S	2.647	67.24	139.69	621.35	75.40	13.19
C2585-250-4750-S	2.782	70.65	139.69	621.35	70.96	12.42
C2585-250-5000-S	2.916	74.06	139.69	621.35	67.02	11.73
C2585-250-5250-S	3.050	77.47	139.69	621.35	63.49	11.11
C2585-250-5500-S	3.184	80.88	139.69	621.35	60.32	10.56
C2585-250-5750-S	3.318	84.29	139.69	621.35	57.45	10.05
C2585-250-6000-S	3.453	87.70	139.69	621.35	54.83	9.60

FOR INFORMATION ON ALTERNATIVE FINISHES, SEE PAGE 311

Part Numbers with an "*" are squared and not ground. **Part Numbers in bold** represent the newly expanded Associated Spring RAYMOND compression spring offering.

MUSIC WIRE															STAINLESS STEEL						
Catalog #	Outside Diameter (OD)		Wire Diameter (d)		Free Length (L) Approx		Load Length (L_1)		Solid Height (Sh) Approx		Load (P) at L_1		Spring Rate (R)		Catalog #	Load Length (L_1)		Load (P) at L_1		Spring Rate (R)	
	in	mm	in	mm	in	mm	in	mm	in	mm	lb	N	lb/in	N/mm		in	mm	lb	N	lb/in	N/mm
C2585-250-6250-M	**2.585**	**65.66**	**0.250**	**6.35**	**6.250**	**158.75**	**2.916**	**74.08**	**2.445**	**62.09**	**201.08**	**894.43**	**60.32**	**10.56**	**C2585-250-6250-S**	**3.587**	**91.10**	**139.69**	**621.35**	**52.45**	**9.18**
C2585-250-6500-M	**2.585**	**65.66**	**0.250**	**6.35**	**6.500**	**165.10**	**3.021**	**76.74**	**2.528**	**64.21**	**201.08**	**894.43**	**57.81**	**10.12**	**C2585-250-6500-S**	**3.721**	**94.51**	**139.69**	**621.35**	**50.27**	**8.80**
C2585-250-6750-M	**2.585**	**65.66**	**0.250**	**6.35**	**6.750**	**171.45**	**3.127**	**79.41**	**2.611**	**66.33**	**201.08**	**894.43**	**55.49**	**9.71**	**C2585-250-6750-S**	**3.855**	**97.92**	**139.69**	**621.35**	**48.25**	**8.44**
C2585-250-7000-M*	**2.585**	**65.66**	**0.250**	**6.35**	**7.000**	**177.80**	**3.377**	**85.76**	**2.874**	**73.00**	**201.08**	**894.43**	**55.49**	**9.71**	**C2585-250-7000-S***	**4.105**	**104.27**	**139.69**	**621.35**	**48.25**	**8.44**
C2585-250-7500-M*	**2.585**	**65.66**	**0.250**	**6.35**	**7.500**	**190.50**	**3.587**	**91.10**	**3.041**	**77.24**	**201.08**	**894.43**	**51.38**	**8.99**	**C2585-250-7500-S***	**4.374**	**111.09**	**139.69**	**621.35**	**44.68**	**7.82**
C2585-250-8000-M*	**2.585**	**65.66**	**0.250**	**6.35**	**8.000**	**203.20**	**3.797**	**96.44**	**3.208**	**81.48**	**201.08**	**894.43**	**47.84**	**8.37**	**C2585-250-8000-S***	**4.642**	**117.91**	**139.69**	**621.35**	**41.60**	**7.28**
C2585-250-8500-M*	**2.585**	**65.66**	**0.250**	**6.35**	**8.500**	**215.90**	**4.007**	**101.77**	**3.375**	**85.72**	**201.08**	**894.43**	**44.75**	**7.83**	**C2585-250-8500-S***	**4.910**	**124.73**	**139.69**	**621.35**	**38.92**	**6.81**
C2585-250-9000-M*	**2.585**	**65.66**	**0.250**	**6.35**	**9.000**	**228.60**	**4.217**	**107.11**	**3.542**	**89.96**	**201.08**	**894.43**	**42.04**	**7.36**	**C2585-250-9000-S***	**5.179**	**131.54**	**139.69**	**621.35**	**36.56**	**6.40**
C2585-250-9500-M*	**2.585**	**65.66**	**0.250**	**6.35**	**9.500**	**241.30**	**4.427**	**112.45**	**3.708**	**94.20**	**201.08**	**894.43**	**39.64**	**6.94**	**C2585-250-9500-S***	**5.447**	**138.36**	**139.69**	**621.35**	**34.47**	**6.03**
C2644-207-4250-M	**2.644**	**67.16**	**0.207**	**5.26**	**4.250**	**107.95**	**1.694**	**43.03**	**1.305**	**33.16**	**116.34**	**517.51**	**45.52**	**7.97**	**C2644-207-4250-S**	**2.142**	**54.40**	**83.45**	**371.22**	**39.58**	**6.93**
C2644-207-4500-M	**2.644**	**67.16**	**0.207**	**5.26**	**4.500**	**114.30**	**1.778**	**45.15**	**1.362**	**34.60**	**116.34**	**517.51**	**42.74**	**7.48**	**C2644-207-4500-S**	**2.254**	**57.26**	**83.45**	**371.22**	**37.16**	**6.50**
C2644-207-4750-M	**2.644**	**67.16**	**0.207**	**5.26**	**4.750**	**120.65**	**1.861**	**47.27**	**1.419**	**36.04**	**116.34**	**517.51**	**40.27**	**7.05**	**C2644-207-4750-S**	**2.367**	**60.12**	**83.45**	**371.22**	**35.02**	**6.13**
C2644-207-5000-M	**2.644**	**67.16**	**0.207**	**5.26**	**5.000**	**127.00**	**1.945**	**49.39**	**1.476**	**37.48**	**116.34**	**517.51**	**38.08**	**6.66**	**C2644-207-5000-S**	**2.480**	**62.98**	**83.45**	**371.22**	**33.11**	**5.79**
C2644-207-5250-M	**2.644**	**67.16**	**0.207**	**5.26**	**5.250**	**133.35**	**2.028**	**51.51**	**1.532**	**38.92**	**116.34**	**517.51**	**36.11**	**6.32**	**C2644-207-5250-S**	**2.592**	**65.84**	**83.45**	**371.22**	**31.40**	**5.49**
C2644-207-5500-M	**2.644**	**67.16**	**0.207**	**5.26**	**5.500**	**139.70**	**2.111**	**53.63**	**1.589**	**40.36**	**116.34**	**517.51**	**34.33**	**6.01**	**C2644-207-5500-S**	**2.705**	**68.70**	**83.45**	**371.22**	**29.86**	**5.22**
C2644-207-5750-M	**2.644**	**67.16**	**0.207**	**5.26**	**5.750**	**146.05**	**2.195**	**55.75**	**1.646**	**41.80**	**116.34**	**517.51**	**32.73**	**5.73**	**C2644-207-5750-S**	**2.817**	**71.56**	**83.45**	**371.22**	**28.46**	**4.98**
C2644-207-6000-M	**2.644**	**67.16**	**0.207**	**5.26**	**6.000**	**152.40**	**2.278**	**57.87**	**1.703**	**43.25**	**116.34**	**517.51**	**31.26**	**5.47**	**C2644-207-6000-S**	**2.930**	**74.42**	**83.45**	**371.22**	**27.18**	**4.76**
C2644-207-6250-M	**2.644**	**67.16**	**0.207**	**5.26**	**6.250**	**158.75**	**2.362**	**59.99**	**1.759**	**44.69**	**116.34**	**517.51**	**29.92**	**5.24**	**C2644-207-6250-S**	**3.043**	**77.28**	**83.45**	**371.22**	**26.02**	**4.55**
C2644-207-6500-M	**2.644**	**67.16**	**0.207**	**5.26**	**6.500**	**165.10**	**2.445**	**62.11**	**1.816**	**46.13**	**116.34**	**517.51**	**28.69**	**5.02**	**C2644-207-6500-S**	**3.155**	**80.14**	**83.45**	**371.22**	**24.95**	**4.37**
C2644-207-6750-M	**2.644**	**67.16**	**0.207**	**5.26**	**6.750**	**171.45**	**2.529**	**64.23**	**1.873**	**47.57**	**116.34**	**517.51**	**27.56**	**4.82**	**C2644-207-6750-S**	**3.268**	**83.00**	**83.45**	**371.22**	**23.97**	**4.19**
C2644-207-7000-M	**2.644**	**67.16**	**0.207**	**5.26**	**7.000**	**177.80**	**2.612**	**66.35**	**1.930**	**49.01**	**116.34**	**517.51**	**26.51**	**4.64**	**C2644-207-7000-S**	**3.380**	**85.86**	**83.45**	**371.22**	**23.06**	**4.03**
C2644-207-7500-M	**2.644**	**67.16**	**0.207**	**5.26**	**7.500**	**190.50**	**2.779**	**70.58**	**2.043**	**51.89**	**116.34**	**517.51**	**24.64**	**4.31**	**C2644-207-7500-S**	**3.606**	**91.58**	**83.45**	**371.22**	**21.43**	**3.75**
C2644-207-8000-M	**2.644**	**67.16**	**0.207**	**5.26**	**8.000**	**203.20**	**2.946**	**74.82**	**2.157**	**54.78**	**116.34**	**517.51**	**23.02**	**4.03**	**C2644-207-8000-S**	**3.831**	**97.30**	**83.45**	**371.22**	**20.02**	**3.50**
C2644-207-8500-M	**2.644**	**67.16**	**0.207**	**5.26**	**8.500**	**215.90**	**3.113**	**79.06**	**2.270**	**57.66**	**116.34**	**517.51**	**21.60**	**3.78**	**C2644-207-8500-S**	**4.056**	**103.02**	**83.45**	**371.22**	**18.78**	**3.29**
C2644-207-9000-M	**2.644**	**67.16**	**0.207**	**5.26**	**9.000**	**228.60**	**3.280**	**83.30**	**2.384**	**60.54**	**116.34**	**517.51**	**20.34**	**3.56**	**C2644-207-9000-S**	**4.281**	**108.74**	**83.45**	**371.22**	**17.69**	**3.09**
C2644-207-9500-M	**2.644**	**67.16**	**0.207**	**5.26**	**9.500**	**241.30**	**3.446**	**87.54**	**2.497**	**63.42**	**116.34**	**517.51**	**19.22**	**3.36**	**C2644-207-9500-S**	**4.506**	**114.46**	**83.45**	**371.22**	**16.71**	**2.92**
C2644-225-4250-M	**2.644**	**67.16**	**0.225**	**5.72**	**4.250**	**107.95**	**1.838**	**46.68**	**1.483**	**37.67**	**146.79**	**652.95**	**60.86**	**10.65**	**C2644-225-4250-S**	**2.287**	**58.09**	**103.88**	**462.07**	**52.92**	**9.26**
C2644-225-4500-M	**2.644**	**67.16**	**0.225**	**5.72**	**4.500**	**114.30**	**1.929**	**49.00**	**1.549**	**39.35**	**146.79**	**652.95**	**57.10**	**9.99**	**C2644-225-4500-S**	**2.408**	**61.16**	**103.88**	**462.07**	**49.65**	**8.69**
C2644-225-4750-M	**2.644**	**67.16**	**0.225**	**5.72**	**4.750**	**120.65**	**2.021**	**51.32**	**1.616**	**41.04**	**146.79**	**652.95**	**53.78**	**9.41**	**C2644-225-4750-S**	**2.529**	**64.23**	**103.88**	**462.07**	**46.77**	**8.18**
C2644-225-5000-M	**2.644**	**67.16**	**0.225**	**5.72**	**5.000**	**127.00**	**2.112**	**53.64**	**1.682**	**42.73**	**146.79**	**652.95**	**50.83**	**8.89**	**C2644-225-5000-S**	**2.650**	**67.30**	**103.88**	**462.07**	**44.20**	**7.73**
C2644-225-5250-M	**2.644**	**67.16**	**0.225**	**5.72**	**5.250**	**133.35**	**2.203**	**55.96**	**1.749**	**44.42**	**146.79**	**652.95**	**48.18**	**8.43**	**C2644-225-5250-S**	**2.770**	**70.37**	**103.88**	**462.07**	**41.89**	**7.33**
C2644-225-5500-M	**2.644**	**67.16**	**0.225**	**5.72**	**5.500**	**139.70**	**2.295**	**58.28**	**1.815**	**46.11**	**146.79**	**652.95**	**45.79**	**8.01**	**C2644-225-5500-S**	**2.891**	**73.44**	**103.88**	**462.07**	**39.82**	**6.97**
C2644-225-5750-M	**2.644**	**67.16**	**0.225**	**5.72**	**5.750**	**146.05**	**2.386**	**60.60**	**1.882**	**47.80**	**146.79**	**652.95**	**43.63**	**7.64**	**C2644-225-5750-S**	**3.012**	**76.51**	**103.88**	**462.07**	**37.94**	**6.64**
C2644-225-6000-M	**2.644**	**67.16**	**0.225**	**5.72**	**6.000**	**152.40**	**2.477**	**62.92**	**1.948**	**49.48**	**146.79**	**652.95**	**41.67**	**7.29**	**C2644-225-6000-S**	**3.133**	**79.58**	**103.88**	**462.07**	**36.23**	**6.34**
C2644-225-6250-M	**2.644**	**67.16**	**0.225**	**5.72**	**6.250**	**158.75**	**2.568**	**65.24**	**2.015**	**51.17**	**146.79**	**652.95**	**39.87**	**6.98**	**C2644-225-6250-S**	**3.254**	**82.65**	**103.88**	**462.07**	**34.67**	**6.07**
C2644-225-6500-M	**2.644**	**67.16**	**0.225**	**5.72**	**6.500**	**165.10**	**2.660**	**67.56**	**2.081**	**52.86**	**146.79**	**652.95**	**38.22**	**6.69**	**C2644-225-6500-S**	**3.375**	**85.72**	**103.88**	**462.07**	**33.24**	**5.82**
C2644-225-6750-M	**2.644**	**67.16**	**0.225**	**5.72**	**6.750**	**171.45**	**2.751**	**69.88**	**2.148**	**54.55**	**146.79**	**652.95**	**36.71**	**6.42**	**C2644-225-6750-S**	**3.496**	**88.79**	**103.88**	**462.07**	**31.92**	**5.59**
C2644-225-7000-M	**2.644**	**67.16**	**0.225**	**5.72**	**7.000**	**177.80**	**2.842**	**72.20**	**2.214**	**56.24**	**146.79**	**652.95**	**35.31**	**6.18**	**C2644-225-7000-S**	**3.616**	**91.86**	**103.88**	**462.07**	**30.70**	**5.37**
C2644-225-7500-M	**2.644**	**67.16**	**0.225**	**5.72**	**7.500**	**190.50**	**3.025**	**76.83**	**2.347**	**59.62**	**146.79**	**652.95**	**32.80**	**5.74**	**C2644-225-7500-S**	**3.858**	**98.00**	**103.88**	**462.07**	**28.52**	**4.99**
C2644-225-8000-M	**2.644**	**67.16**	**0.225**	**5.72**	**8.000**	**203.20**	**3.208**	**81.47**	**2.480**	**62.99**	**146.79**	**652.95**	**30.63**	**5.36**	**C2644-225-8000-S**	**4.100**	**104.14**	**103.88**	**462.07**	**26.64**	**4.66**
C2644-225-8500-M	**2.644**	**67.16**	**0.225**	**5.72**	**8.500**	**215.90**	**3.390**	**86.11**	**2.613**	**66.37**	**146.79**	**652.95**	**28.73**	**5.03**	**C2644-225-8500-S**	**4.342**	**110.28**	**103.88**	**462.07**	**24.98**	**4.37**
C2644-225-9000-M*	**2.644**	**67.16**	**0.225**	**5.72**	**9.000**	**228.60**	**3.716**	**94.38**	**2.922**	**74.23**	**146.79**	**652.95**	**27.78**	**4.86**	**C2644-225-9000-S***	**4.700**	**119.37**	**103.88**	**462.07**	**24.16**	**4.23**
C2644-225-9500-M*	**2.644**	**67.16**	**0.225**	**5.72**	**9.500**	**241.30**	**3.898**	**99.02**	**3.055**	**77.60**	**146.79**	**652.95**	**26.21**	**4.59**	**C2644-225-9500-S***	**4.941**	**125.51**	**103.88**	**462.07**	**22.79**	**3.99**
C2644-250-4000-M	**2.644**	**67.16**	**0.250**	**6.35**	**4.000**	**101.60**	**1.937**	**49.19**	**1.651**	**41.94**	**196.82**	**875.49**	**95.39**	**16.69**	**C2644-250-4000-S**	**2.352**	**59.73**	**136.73**	**608.20**	**82.95**	**14.52**
C2644-250-4250-M	**2.644**	**67.16**	**0.250**	**6.35**	**4.250**	**107.95**	**2.039**	**51.80**	**1.732**	**43.98**	**196.82**	**875.49**	**89.03**	**15.58**	**C2644-250-4250-S**	**2.484**	**63.09**	**136.73**	**608.20**	**77.42**	**13.55**
C2644-250-4500-M	**2.644**	**67.16**	**0.250**	**6.35**	**4.500**	**114.30**	**2.142**	**54.41**	**1.812**	**46.03**	**196.82**	**875.49**	**83.47**	**14.61**	**C2644-250-4500-S**	**2.616**	**66.45**	**136.73**	**608.20**	**72.58**	**12.70**
C2644-250-4750-M	**2.644**	**67.16**	**0.250**	**6.35**	**4.750**	**120.65**	**2.245**	**57.01**	**1.893**	**48.07**	**196.82**	**875.49**	**78.56**	**13.75**	**C2644-250-4750-S**	**2.748**	**69.81**	**136.73**	**608.20**	**68.31**	**11.95**
C2644-250-5000-M	**2.644**	**67.16**	**0.250**	**6.35**	**5.000**	**127.00**	**2.347**	**59.62**	**1.973**	**50.11**	**196.82**	**875.49**	**74.19**	**12.98**	**C2644-250-5000-S**	**2.881**	**73.17**	**136.73**	**608.20**	**64.52**	**11.29**
C2644-250-5250-M	**2.644**	**67.16**	**0.250**	**6.35**	**5.250**	**133.35**	**2.450**	**62.23**	**2.053**	**52.16**	**196.82**	**875.49**	**70.29**	**12.30**	**C2644-250-5250-S**	**3.013**	**76.53**	**136.73**	**608.20**	**61.12**	**10.70**
C2644-250-5500-M	**2.644**	**67.16**	**0.250**	**6.35**	**5.500**	**139.70**	**2.552**	**64.83**	**2.134**	**54.20**	**196.82**	**875.49**	**66.77**	**11.69**	**C2644-250-5500-S**	**3.145**	**79.89**	**136.73**	**608.20**	**58.06**	**10.16**
C2644-250-5750-M	**2.644**	**67.16**	**0.250**	**6.35**	**5.750**	**146.05**	**2.655**	**67.44**	**2.214**	**56.24**	**196.82**	**875.49**	**63.59**	**11.13**	**C2644-250-5750-S**	**3.277**	**83.25**	**136.73**	**608.20**	**55.30**	**9.68**
C2644-250-6000-M	**2.644**	**67.16**	**0.250**	**6.35**	**6.000**	**152.40**	**2.758**	**70.04**	**2.295**	**58.29**	**196.82**	**875.49**	**60.70**	**10.62**	**C2644-250-6000-S**	**3.410**	**86.61**	**136.73**	**608.20**	**52.79**	**9.24**
C2644-250-6250-M	**2.644**	**67.16**	**0.250**	**6.35**	**6.250**	**158.75**	**2.860**	**72.65**	**2.375**	**60.33**	**196.82**	**875.49**	**58.06**	**10.16**	**C2644-250-6250-S**	**3.542**	**89.97**	**136.73**	**608.20**	**50.49**	**8.84**
C2644-250-6500-M	**2.644**	**67.16**	**0.250**	**6.35**	**6.500**	**165.10**	**2.963**	**75.26**	**2.456**	**62.37**	**196.82**	**875.49**	**55.64**	**9.74**	**C2644-250-6500-S**	**3.674**	**93.33**	**136.73**	**608.20**	**48.39**	**8.47**
C2644-250-6750-M	**2.644**	**67.16**	**0.250**	**6.35**	**6.750**	**171.45**	**3.066**	**77.86**	**2.536**	**64.42**	**196.82**	**875.49**	**53.42**	**9.35**	**C2644-250-6750-S**	**3.806**	**96.68**	**136.73**	**608.20**	**46.45**	**8.13**
C2644-250-7000-M	**2.644**	**67.16**	**0.250**	**6.35**	**7.000**	**177.80**	**3.168**	**80.47**	**2.617**	**66.46**	**196.82**	**875.49**	**51.36**	**8.99**	**C2644-250-7000-S**	**3.939**	**100.04**	**136.73**	**608.20**	**44.66**	**7.82**
C2644-250-7500-M*	**2.644**	**67.16**	**0.250**	**6.35**	**7.500**	**190.50**	**3.521**	**89.43**	**2.959**	**75.17**	**196.82**	**875.49**	**49.46**	**8.66**	**C2644-250-7500-S***	**4.321**	**109.75**	**136.73**	**608.20**	**43.01**	**7.53**
C2644-250-8000-M*	**2.644**	**67.16**	**0.250**	**6.35**	**8.000**	**203.20**	**3.726**	**94.64**	**3.120**	**79.26**	**196.82**	**875.49**	**46.05**	**8.06**	**C2644-250-8000-S***	**4.586**	**116.47**	**136.73**	**608.20**	**40.04**	**7.01**
C2644-250-8500-M*	**2.644**	**67.16**	**0.250**	**6.35**	**8.500**	**215.90**	**3.931**	**99.85**	**3.281**	**83.34**	**196.82**	**875.49**	**43.08**	**7.54**	**C2644-250-8500-S***	**4.850**	**123.19**	**136.73**	**608.20**	**37.46**	**6.56**
C2644-250-9000-M*	**2.644**	**67.16**	**0.250**	**6.35**	**9.000**	**228.60**	**4.137**	**105.07**	**3.442**	**87.43**	**196.82**	**875.49**	**40.47**	**7.08**	**C2644-250-9000-S***	**5.115**	**129.91**	**136.73**	**608.20**	**35.19**	**6.16**
C2644-250-9500-M*	**2.644**	**67.16**	**0.250**	**6.35**	**9.500**	**241.30**	**4.342**	**110.28**	**3.603**	**91.52**	**196.82**	**875.49**	**38.16**	**6.68**	**C2644-250-9500-S***	**5.379**	**136.63**	**136.73**	**608.20**	**33.18**	**5.81**
D13980	2.677	68.00	0.197	5.00	4.724	120.00	1.272	32.30	1.083	27.50	139.99	622.72	41.54	7.27	D23980	1.272	32.30	116.66	518.93	34.63	6.06
D13990	2.677	68.00	0.197	5.00	7.087	180.00	1.783	45.30	1.476	37.50	139.99	622.72	26.46	4.63	D23990	1.783	45.30	116.66	518.93	22.06	3.86
D14000	2.677	68.00	0.197	5.00	10.827	275.00	2.551	64.80	2.067	52.50	139.99	622.72	17.09	2.99	D24000	2.551	64.80	116.66	518.93	14.23	2.49

Part Numbers with an "*" are squared and not ground. **Part Numbers in bold** represent the newly expanded Associated Spring RAYMOND compression spring offering.

MUSIC WIRE															STAINLESS STEEL					
Catalog #	Outside Diameter (OD)		Wire Diameter (d)		Free Length (L) Approx		Load Length (L_1)		Solid Height (Sh) Approx		Load (P) at L_1		Spring Rate (R)		Catalog #	Load Length (L_1)		Load (P) at L_1		Spring Rate (R)	
	in	mm	in	mm	in	mm	in	mm	in	mm	lb	N	lb/in	N/mm		in	mm	lb	N	lb/in	N/mm
D14010	2.677	68.00	0.197	5.00	15.551	395.00	3.575	90.80	2.854	72.50	139.99	622.72	11.60	2.03	D24010	3.575	90.80	116.66	518.93	9.66	1.69
D14020	2.677	68.00	0.197	5.00	23.031	585.00	5.118	130.00	4.035	102.50	139.99	622.72	7.83	1.37	D24020	5.118	130.00	116.66	518.93	6.51	1.14
C2703-225-4250-M	**2.703**	**68.66**	**0.225**	**5.72**	**4.250**	**107.95**	**1.807**	**45.90**	**1.445**	**36.70**	**143.72**	**639.31**	**58.83**	**10.30**	**C2703-225-4250-S**	**2.262**	**57.45**	**101.71**	**452.41**	**51.16**	**8.95**
C2703-225-4500-M	**2.703**	**68.66**	**0.225**	**5.72**	**4.500**	**114.30**	**1.896**	**48.17**	**1.509**	**38.32**	**143.72**	**639.31**	**55.20**	**9.66**	**C2703-225-4500-S**	**2.381**	**60.48**	**101.71**	**452.41**	**48.00**	**8.40**
C2703-225-4750-M	**2.703**	**68.66**	**0.225**	**5.72**	**4.750**	**120.65**	**1.986**	**50.44**	**1.573**	**39.95**	**143.72**	**639.31**	**51.99**	**9.10**	**C2703-225-4750-S**	**2.500**	**63.51**	**101.71**	**452.41**	**45.21**	**7.91**
C2703-225-5000-M	**2.703**	**68.66**	**0.225**	**5.72**	**5.000**	**127.00**	**2.075**	**52.70**	**1.637**	**41.57**	**143.72**	**639.31**	**49.14**	**8.60**	**C2703-225-5000-S**	**2.620**	**66.54**	**101.71**	**452.41**	**42.73**	**7.48**
C2703-225-5250-M	**2.703**	**68.66**	**0.225**	**5.72**	**5.250**	**133.35**	**2.164**	**54.97**	**1.701**	**43.20**	**143.72**	**639.31**	**46.58**	**8.15**	**C2703-225-5250-S**	**2.739**	**69.56**	**101.71**	**452.41**	**40.50**	**7.09**
C2703-225-5500-M	**2.703**	**68.66**	**0.225**	**5.72**	**5.500**	**139.70**	**2.253**	**57.24**	**1.765**	**44.82**	**143.72**	**639.31**	**44.27**	**7.75**	**C2703-225-5500-S**	**2.858**	**72.59**	**101.71**	**452.41**	**38.50**	**6.74**
C2703-225-5750-M	**2.703**	**68.66**	**0.225**	**5.72**	**5.750**	**146.05**	**2.343**	**59.51**	**1.829**	**46.45**	**143.72**	**639.31**	**42.18**	**7.38**	**C2703-225-5750-S**	**2.977**	**75.62**	**101.71**	**452.41**	**36.68**	**6.42**
C2703-225-6000-M	**2.703**	**68.66**	**0.225**	**5.72**	**6.000**	**152.40**	**2.432**	**61.77**	**1.893**	**48.07**	**143.72**	**639.31**	**40.28**	**7.05**	**C2703-225-6000-S**	**3.096**	**78.65**	**101.71**	**452.41**	**35.03**	**6.13**
C2703-225-6250-M	**2.703**	**68.66**	**0.225**	**5.72**	**6.250**	**158.75**	**2.521**	**64.04**	**1.956**	**49.70**	**143.72**	**639.31**	**38.55**	**6.75**	**C2703-225-6250-S**	**3.216**	**81.68**	**101.71**	**452.41**	**33.52**	**5.87**
C2703-225-6500-M	**2.703**	**68.66**	**0.225**	**5.72**	**6.500**	**165.10**	**2.611**	**66.31**	**2.020**	**51.32**	**143.72**	**639.31**	**36.95**	**6.47**	**C2703-225-6500-S**	**3.335**	**84.70**	**101.71**	**452.41**	**32.13**	**5.62**
C2703-225-6750-M	**2.703**	**68.66**	**0.225**	**5.72**	**6.750**	**171.45**	**2.700**	**68.58**	**2.084**	**52.94**	**143.72**	**639.31**	**35.49**	**6.21**	**C2703-225-6750-S**	**3.454**	**87.73**	**101.71**	**452.41**	**30.86**	**5.40**
C2703-225-7000-M	**2.703**	**68.66**	**0.225**	**5.72**	**7.000**	**177.80**	**2.789**	**70.85**	**2.148**	**54.57**	**143.72**	**639.31**	**34.13**	**5.97**	**C2703-225-7000-S**	**3.573**	**90.76**	**101.71**	**452.41**	**29.68**	**5.19**
C2703-225-7500-M	**2.703**	**68.66**	**0.225**	**5.72**	**7.500**	**190.50**	**2.968**	**75.38**	**2.276**	**57.82**	**143.72**	**639.31**	**31.71**	**5.55**	**C2703-225-7500-S**	**3.812**	**96.82**	**101.71**	**452.41**	**27.58**	**4.83**
C2703-225-8000-M	**2.703**	**68.66**	**0.225**	**5.72**	**8.000**	**203.20**	**3.146**	**79.92**	**2.404**	**61.07**	**143.72**	**639.31**	**29.61**	**5.18**	**C2703-225-8000-S**	**4.050**	**102.87**	**101.71**	**452.41**	**25.75**	**4.51**
C2703-225-8500-M	**2.703**	**68.66**	**0.225**	**5.72**	**8.500**	**215.90**	**3.325**	**84.45**	**2.532**	**64.32**	**143.72**	**639.31**	**27.77**	**4.86**	**C2703-225-8500-S**	**4.288**	**108.93**	**101.71**	**452.41**	**24.15**	**4.23**
C2703-225-9000-M	**2.703**	**68.66**	**0.225**	**5.72**	**9.000**	**228.60**	**3.503**	**88.99**	**2.660**	**67.57**	**143.72**	**639.31**	**26.15**	**4.58**	**C2703-225-9000-S**	**4.527**	**114.98**	**101.71**	**452.41**	**22.74**	**3.98**
C2703-225-9500-M	**2.703**	**68.66**	**0.225**	**5.72**	**9.500**	**241.30**	**3.682**	**93.52**	**2.788**	**70.82**	**143.72**	**639.31**	**24.70**	**4.32**	**C2703-225-9500-S**	**4.765**	**121.04**	**101.71**	**452.41**	**21.48**	**3.76**
C2703-250-4000-M	**2.703**	**68.66**	**0.250**	**6.35**	**4.000**	**101.60**	**1.904**	**48.36**	**1.611**	**40.92**	**192.73**	**857.33**	**91.96**	**16.09**	**C2703-250-4000-S**	**2.326**	**59.07**	**133.89**	**595.58**	**79.96**	**13.99**
C2703-250-4250-M	**2.703**	**68.66**	**0.250**	**6.35**	**4.250**	**107.95**	**2.004**	**50.91**	**1.689**	**42.89**	**192.73**	**857.33**	**85.83**	**15.02**	**C2703-250-4250-S**	**2.456**	**62.38**	**133.89**	**595.58**	**74.63**	**13.06**
C2703-250-4500-M	**2.703**	**68.66**	**0.250**	**6.35**	**4.500**	**114.30**	**2.105**	**53.46**	**1.766**	**44.86**	**192.73**	**857.33**	**80.46**	**14.08**	**C2703-250-4500-S**	**2.586**	**65.69**	**133.89**	**595.58**	**69.97**	**12.24**
C2703-250-4750-M	**2.703**	**68.66**	**0.250**	**6.35**	**4.750**	**120.65**	**2.205**	**56.01**	**1.844**	**46.83**	**192.73**	**857.33**	**75.73**	**13.25**	**C2703-250-4750-S**	**2.717**	**69.01**	**133.89**	**595.58**	**65.85**	**11.52**
C2703-250-5000-M	**2.703**	**68.66**	**0.250**	**6.35**	**5.000**	**127.00**	**2.305**	**58.55**	**1.921**	**48.80**	**192.73**	**857.33**	**71.52**	**12.52**	**C2703-250-5000-S**	**2.847**	**72.32**	**133.89**	**595.58**	**62.19**	**10.88**
C2703-250-5250-M	**2.703**	**68.66**	**0.250**	**6.35**	**5.250**	**133.35**	**2.406**	**61.10**	**1.999**	**50.77**	**192.73**	**857.33**	**67.76**	**11.86**	**C2703-250-5250-S**	**2.978**	**75.63**	**133.89**	**595.58**	**58.92**	**10.31**
C2703-250-5500-M	**2.703**	**68.66**	**0.250**	**6.35**	**5.500**	**139.70**	**2.506**	**63.65**	**2.076**	**52.74**	**192.73**	**857.33**	**64.37**	**11.26**	**C2703-250-5500-S**	**3.108**	**78.94**	**133.89**	**595.58**	**55.98**	**9.80**
C2703-250-5750-M	**2.703**	**68.66**	**0.250**	**6.35**	**5.750**	**146.05**	**2.606**	**66.20**	**2.154**	**54.71**	**192.73**	**857.33**	**61.31**	**10.73**	**C2703-250-5750-S**	**3.238**	**82.26**	**133.89**	**595.58**	**53.31**	**9.33**
C2703-250-6000-M	**2.703**	**68.66**	**0.250**	**6.35**	**6.000**	**152.40**	**2.706**	**68.74**	**2.232**	**56.68**	**192.73**	**857.33**	**58.52**	**10.24**	**C2703-250-6000-S**	**3.369**	**85.57**	**133.89**	**595.58**	**50.89**	**8.91**
C2703-250-6250-M	**2.703**	**68.66**	**0.250**	**6.35**	**6.250**	**158.75**	**2.807**	**71.29**	**2.309**	**58.65**	**192.73**	**857.33**	**55.98**	**9.80**	**C2703-250-6250-S**	**3.499**	**88.88**	**133.89**	**595.58**	**48.67**	**8.52**
C2703-250-6500-M	**2.703**	**68.66**	**0.250**	**6.35**	**6.500**	**165.10**	**2.907**	**73.84**	**2.387**	**60.62**	**192.73**	**857.33**	**53.64**	**9.39**	**C2703-250-6500-S**	**3.630**	**92.19**	**133.89**	**595.58**	**46.65**	**8.16**
C2703-250-6750-M	**2.703**	**68.66**	**0.250**	**6.35**	**6.750**	**171.45**	**3.007**	**76.39**	**2.464**	**62.59**	**192.73**	**857.33**	**51.50**	**9.01**	**C2703-250-6750-S**	**3.760**	**95.50**	**133.89**	**595.58**	**44.78**	**7.84**
C2703-250-7000-M	**2.703**	**68.66**	**0.250**	**6.35**	**7.000**	**177.80**	**3.108**	**78.93**	**2.542**	**64.56**	**192.73**	**857.33**	**49.52**	**8.67**	**C2703-250-7000-S**	**3.890**	**98.82**	**133.89**	**595.58**	**43.06**	**7.53**
C2703-250-7500-M*	**2.703**	**68.66**	**0.250**	**6.35**	**7.500**	**190.50**	**3.458**	**87.83**	**2.882**	**73.20**	**192.73**	**857.33**	**47.68**	**8.34**	**C2703-250-7500-S***	**4.271**	**108.48**	**133.89**	**595.58**	**41.46**	**7.26**
C2703-250-8000-M*	**2.703**	**68.66**	**0.250**	**6.35**	**8.000**	**203.20**	**3.659**	**92.93**	**3.037**	**77.14**	**192.73**	**857.33**	**44.39**	**7.77**	**C2703-250-8000-S***	**4.532**	**115.10**	**133.89**	**595.58**	**38.60**	**6.76**
C2703-250-8500-M*	**2.703**	**68.66**	**0.250**	**6.35**	**8.500**	**215.90**	**3.859**	**98.02**	**3.192**	**81.08**	**192.73**	**857.33**	**41.53**	**7.27**	**C2703-250-8500-S***	**4.792**	**121.73**	**133.89**	**595.58**	**36.11**	**6.32**
C2703-250-9000-M*	**2.703**	**68.66**	**0.250**	**6.35**	**9.000**	**228.60**	**4.060**	**103.12**	**3.347**	**85.02**	**192.73**	**857.33**	**39.01**	**6.83**	**C2703-250-9000-S***	**5.053**	**128.35**	**133.89**	**595.58**	**33.92**	**5.94**
C2703-250-9500-M*	**2.703**	**68.66**	**0.250**	**6.35**	**9.500**	**241.30**	**4.260**	**108.21**	**3.502**	**88.96**	**192.73**	**857.33**	**36.78**	**6.44**	**C2703-250-9500-S***	**5.314**	**134.98**	**133.89**	**595.58**	**31.99**	**5.60**
C2761-225-4500-M	**2.761**	**70.13**	**0.225**	**5.72**	**4.500**	**114.30**	**1.866**	**47.39**	**1.471**	**37.36**	**140.83**	**626.44**	**53.46**	**9.36**	**C2761-225-4500-S**	**2.356**	**59.85**	**99.66**	**443.30**	**46.49**	**8.13**
C2761-225-4750-M	**2.761**	**70.13**	**0.225**	**5.72**	**4.750**	**120.65**	**1.953**	**49.61**	**1.532**	**38.92**	**140.83**	**626.44**	**50.35**	**8.81**	**C2761-225-4750-S**	**2.474**	**62.83**	**99.66**	**443.30**	**43.78**	**7.66**
C2761-225-5000-M	**2.761**	**70.13**	**0.225**	**5.72**	**5.000**	**127.00**	**2.040**	**51.83**	**1.594**	**40.49**	**140.83**	**626.44**	**47.58**	**8.33**	**C2761-225-5000-S**	**2.591**	**65.82**	**99.66**	**443.30**	**41.38**	**7.24**
C2761-225-5250-M	**2.761**	**70.13**	**0.225**	**5.72**	**5.250**	**133.35**	**2.128**	**54.05**	**1.656**	**42.05**	**140.83**	**626.44**	**45.11**	**7.89**	**C2761-225-5250-S**	**2.709**	**68.81**	**99.66**	**443.30**	**39.22**	**6.86**
C2761-225-5500-M	**2.761**	**70.13**	**0.225**	**5.72**	**5.500**	**139.70**	**2.215**	**56.27**	**1.717**	**43.62**	**140.83**	**626.44**	**42.87**	**7.50**	**C2761-225-5500-S**	**2.827**	**71.80**	**99.66**	**443.30**	**37.28**	**6.52**
C2761-225-5750-M	**2.761**	**70.13**	**0.225**	**5.72**	**5.750**	**146.05**	**2.303**	**58.48**	**1.779**	**45.18**	**140.83**	**626.44**	**40.85**	**7.15**	**C2761-225-5750-S**	**2.944**	**74.79**	**99.66**	**443.30**	**35.52**	**6.22**
C2761-225-6000-M	**2.761**	**70.13**	**0.225**	**5.72**	**6.000**	**152.40**	**2.390**	**60.70**	**1.840**	**46.75**	**140.83**	**626.44**	**39.01**	**6.83**	**C2761-225-6000-S**	**3.062**	**77.78**	**99.66**	**443.30**	**33.92**	**5.94**
C2761-225-6250-M	**2.761**	**70.13**	**0.225**	**5.72**	**6.250**	**158.75**	**2.477**	**62.92**	**1.902**	**48.31**	**140.83**	**626.44**	**37.33**	**6.53**	**C2761-225-6250-S**	**3.180**	**80.77**	**99.66**	**443.30**	**32.46**	**5.68**
C2761-225-6500-M	**2.761**	**70.13**	**0.225**	**5.72**	**6.500**	**165.10**	**2.565**	**65.14**	**1.964**	**49.88**	**140.83**	**626.44**	**35.79**	**6.26**	**C2761-225-6500-S**	**3.297**	**83.75**	**99.66**	**443.30**	**31.12**	**5.45**
C2761-225-6750-M	**2.761**	**70.13**	**0.225**	**5.72**	**6.750**	**171.45**	**2.652**	**67.36**	**2.025**	**51.44**	**140.83**	**626.44**	**34.37**	**6.01**	**C2761-225-6750-S**	**3.415**	**86.74**	**99.66**	**443.30**	**29.88**	**5.23**
C2761-225-7000-M	**2.761**	**70.13**	**0.225**	**5.72**	**7.000**	**177.80**	**2.739**	**69.58**	**2.087**	**53.01**	**140.83**	**626.44**	**33.05**	**5.78**	**C2761-225-7000-S**	**3.533**	**89.73**	**99.66**	**443.30**	**28.74**	**5.03**
C2761-225-7500-M	**2.761**	**70.13**	**0.225**	**5.72**	**7.500**	**190.50**	**2.914**	**74.02**	**2.210**	**56.14**	**140.83**	**626.44**	**30.71**	**5.37**	**C2761-225-7500-S**	**3.768**	**95.71**	**99.66**	**443.30**	**26.70**	**4.67**
C2761-225-8000-M	**2.761**	**70.13**	**0.225**	**5.72**	**8.000**	**203.20**	**3.089**	**78.46**	**2.333**	**59.27**	**140.83**	**626.44**	**28.68**	**5.02**	**C2761-225-8000-S**	**4.003**	**101.69**	**99.66**	**443.30**	**24.94**	**4.36**
C2761-225-8500-M	**2.761**	**70.13**	**0.225**	**5.72**	**8.500**	**215.90**	**3.264**	**82.90**	**2.457**	**62.40**	**140.83**	**626.44**	**26.90**	**4.71**	**C2761-225-8500-S**	**4.239**	**107.66**	**99.66**	**443.30**	**23.39**	**4.09**
C2761-225-9000-M	**2.761**	**70.13**	**0.225**	**5.72**	**9.000**	**228.60**	**3.439**	**87.34**	**2.580**	**65.53**	**140.83**	**626.44**	**25.32**	**4.43**	**C2761-225-9000-S**	**4.474**	**113.64**	**99.66**	**443.30**	**22.02**	**3.85**
C2761-225-9500-M	**2.761**	**70.13**	**0.225**	**5.72**	**9.500**	**241.30**	**3.613**	**91.78**	**2.703**	**68.66**	**140.83**	**626.44**	**23.92**	**4.19**	**C2761-225-9500-S**	**4.709**	**119.62**	**99.66**	**443.30**	**20.80**	**3.64**
C2761-250-4250-M	**2.761**	**70.13**	**0.250**	**6.35**	**4.250**	**107.95**	**1.972**	**50.08**	**1.648**	**41.86**	**188.88**	**840.18**	**82.90**	**14.51**	**C2761-250-4250-S**	**2.430**	**61.72**	**131.21**	**583.67**	**72.09**	**12.62**
C2761-250-4500-M	**2.761**	**70.13**	**0.250**	**6.35**	**4.500**	**114.30**	**2.070**	**52.57**	**1.723**	**43.76**	**188.88**	**840.18**	**77.72**	**13.60**	**C2761-250-4500-S**	**2.558**	**64.99**	**131.21**	**583.67**	**67.58**	**11.83**
C2761-250-4750-M	**2.761**	**70.13**	**0.250**	**6.35**	**4.750**	**120.65**	**2.168**	**55.06**	**1.798**	**45.66**	**188.88**	**840.18**	**73.15**	**12.80**	**C2761-250-4750-S**	**2.687**	**68.25**	**131.21**	**583.67**	**63.61**	**11.13**
C2761-250-5000-M	**2.761**	**70.13**	**0.250**	**6.35**	**5.000**	**127.00**	**2.266**	**57.56**	**1.873**	**47.57**	**188.88**	**840.18**	**69.09**	**12.09**	**C2761-250-5000-S**	**2.816**	**71.52**	**131.21**	**583.67**	**60.07**	**10.51**
C2761-250-5250-M	**2.761**	**70.13**	**0.250**	**6.35**	**5.250**	**133.35**	**2.364**	**60.05**	**1.948**	**49.47**	**188.88**	**840.18**	**65.45**	**11.45**	**C2761-250-5250-S**	**2.944**	**74.79**	**131.21**	**583.67**	**56.91**	**9.96**
C2761-250-5500-M	**2.761**	**70.13**	**0.250**	**6.35**	**5.500**	**139.70**	**2.462**	**62.54**	**2.022**	**51.37**	**188.88**	**840.18**	**62.18**	**10.88**	**C2761-250-5500-S**	**3.073**	**78.06**	**131.21**	**583.67**	**54.07**	**9.46**
C2761-250-5750-M	**2.761**	**70.13**	**0.250**	**6.35**	**5.750**	**146.05**	**2.560**	**65.03**	**2.097**	**53.27**	**188.88**	**840.18**	**59.22**	**10.36**	**C2761-250-5750-S**	**3.202**	**81.32**	**131.21**	**583.67**	**51.49**	**9.01**
C2761-250-6000-M	**2.761**	**70.13**	**0.250**	**6.35**	**6.000**	**152.40**	**2.658**	**67.52**	**2.172**	**55.17**	**188.88**	**840.18**	**56.52**	**9.89**	**C2761-250-6000-S**	**3.330**	**84.59**	**131.21**	**583.67**	**49.15**	**8.60**
C2761-250-6250-M	**2.761**	**70.13**	**0.250**	**6.35**	**6.250**	**158.75**	**2.756**	**70.01**	**2.247**	**57.07**	**188.88**	**840.18**	**54.07**	**9.46**	**C2761-250-6250-S**	**3.459**	**87.86**	**131.21**	**583.67**	**47.01**	**8.23**
C2761-250-6500-M	**2.761**	**70.13**	**0.250**	**6.35**	**6.500**	**165.10**	**2.855**	**72.51**	**2.322**	**58.98**	**188.88**	**840.18**	**51.81**	**9.07**	**C2761-250-6500-S**	**3.588**	**91.13**	**131.21**	**583.67**	**45.06**	**7.88**
C2761-250-6750-M	**2.761**	**70.13**	**0.250**	**6.35**	**6.750**	**171.45**	**2.953**	**75.00**	**2.397**	**60.88**	**188.88**	**840.18**	**49.74**	**8.70**	**C2761-250-6750-S**	**3.716**	**94.40**	**131.21**	**583.67**	**43.25**	**7.57**

FOR INFORMATION ON ALTERNATIVE FINISHES, SEE PAGE 311

Part Numbers with an "*" are squared and not ground. **Part Numbers in bold** represent the newly expanded Associated Spring RAYMOND compression spring offering.

MUSIC WIRE															STAINLESS STEEL						
Catalog #	Outside Diameter (OD)		Wire Diameter (d)		Free Length (L) Approx		Load Length (L_1)		Solid Height (Sh) Approx		Load (P) at L_1		Spring Rate (R)		Catalog #	Load Length (L_1)		Load (P) at L_1		Spring Rate (R)	
	in	mm	in	mm	in	mm	in	mm	in	mm	lb	N	lb/in	N/mm		in	mm	lb	N	lb/in	N/mm
C2761-250-7000-M	2.761	70.13	0.250	6.35	7.000	177.80	3.051	77.49	2.472	62.78	188.88	840.18	47.83	8.37	**C2761-250-7000-S**	3.845	97.66	131.21	583.67	41.59	7.28
C2761-250-7500-M	2.761	70.13	0.250	6.35	7.500	190.50	3.247	82.47	2.621	66.58	188.88	840.18	44.41	7.77	**C2761-250-7500-S**	4.102	104.20	131.21	583.67	38.62	6.76
C2761-250-8000-M*	2.761	70.13	0.250	6.35	8.000	203.20	3.595	91.32	2.959	75.15	188.88	840.18	42.88	7.50	**C2761-250-8000-S***	4.481	113.82	131.21	583.67	37.29	6.53
C2761-250-8500-M*	2.761	70.13	0.250	6.35	8.500	215.90	3.791	96.30	3.108	78.95	188.88	840.18	40.11	7.02	**C2761-250-8500-S***	4.738	120.35	131.21	583.67	34.88	6.10
C2761-250-9000-M*	2.761	70.13	0.250	6.35	9.000	228.60	3.988	101.28	3.258	82.76	188.88	840.18	37.68	6.59	**C2761-250-9000-S***	4.996	126.89	131.21	583.67	32.77	5.73
C2761-250-9500-M*	2.761	70.13	0.250	6.35	9.500	241.30	4.184	106.27	3.408	86.56	188.88	840.18	35.53	6.22	**C2761-250-9500-S***	5.253	133.42	131.21	583.67	30.90	5.41
C2820-225-4500-M	2.820	71.63	0.225	5.72	4.500	114.30	1.836	46.63	1.434	36.42	138.00	613.86	51.80	9.07	**C2820-225-4500-S**	2.332	59.23	97.66	434.40	45.04	7.88
C2820-225-4750-M	2.820	71.63	0.225	5.72	4.750	120.65	1.921	48.80	1.493	37.93	138.00	613.86	48.79	8.54	**C2820-225-4750-S**	2.448	62.18	97.66	434.40	42.43	7.42
C2820-225-5000-M	2.820	71.63	0.225	5.72	5.000	127.00	2.007	50.98	1.553	39.44	138.00	613.86	46.11	8.07	**C2820-225-5000-S**	2.564	65.13	97.66	434.40	40.09	7.02
C2820-225-5250-M	2.820	71.63	0.225	5.72	5.250	133.35	2.093	53.15	1.612	40.95	138.00	613.86	43.71	7.65	**C2820-225-5250-S**	2.680	68.08	97.66	434.40	38.01	6.65
C2820-225-5500-M	2.820	71.63	0.225	5.72	5.500	139.70	2.178	55.32	1.671	42.45	138.00	613.86	41.54	7.27	**C2820-225-5500-S**	2.797	71.03	97.66	434.40	36.12	6.32
C2820-225-5750-M	2.820	71.63	0.225	5.72	5.750	146.05	2.264	57.50	1.731	43.96	138.00	613.86	39.58	6.93	**C2820-225-5750-S**	2.913	73.98	97.66	434.40	34.42	6.02
C2820-225-6000-M	2.820	71.63	0.225	5.72	6.000	152.40	2.349	59.67	1.790	45.47	138.00	613.86	37.80	6.62	**C2820-225-6000-S**	3.029	76.94	97.66	434.40	32.87	5.75
C2820-225-6250-M	2.820	71.63	0.225	5.72	6.250	158.75	2.435	61.84	1.850	46.98	138.00	613.86	36.17	6.33	**C2820-225-6250-S**	3.145	79.89	97.66	434.40	31.45	5.50
C2820-225-6500-M	2.820	71.63	0.225	5.72	6.500	165.10	2.520	64.02	1.909	48.49	138.00	613.86	34.68	6.07	**C2820-225-6500-S**	3.261	82.84	97.66	434.40	30.15	5.28
C2820-225-6750-M	2.820	71.63	0.225	5.72	6.750	171.45	2.606	66.19	1.968	49.99	138.00	613.86	33.30	5.83	**C2820-225-6750-S**	3.377	85.79	97.66	434.40	28.96	5.07
C2820-225-7000-M	2.820	71.63	0.225	5.72	7.000	177.80	2.691	68.36	2.028	51.50	138.00	613.86	32.03	5.61	**C2820-225-7000-S**	3.494	88.74	97.66	434.40	27.85	4.87
C2820-225-7500-M	2.820	71.63	0.225	5.72	7.500	190.50	2.862	72.71	2.146	54.52	138.00	613.86	29.76	5.21	**C2820-225-7500-S**	3.726	94.64	97.66	434.40	25.88	4.53
C2820-225-8000-M	2.820	71.63	0.225	5.72	8.000	203.20	3.034	77.05	2.265	57.53	138.00	613.86	27.79	4.86	**C2820-225-8000-S**	3.958	100.54	97.66	434.40	24.16	4.23
C2820-225-8500-M	2.820	71.63	0.225	5.72	8.500	215.90	3.205	81.40	2.384	60.55	138.00	613.86	26.06	4.56	**C2820-225-8500-S**	4.191	106.44	97.66	434.40	22.66	3.97
C2820-225-9000-M	2.820	71.63	0.225	5.72	9.000	228.60	3.376	85.74	2.502	63.56	138.00	613.86	24.54	4.29	**C2820-225-9000-S**	4.423	112.34	97.66	434.40	21.34	3.73
C2820-225-9500-M	2.820	71.63	0.225	5.72	9.500	241.30	3.547	90.09	2.621	66.58	138.00	613.86	23.18	4.06	**C2820-225-9500-S**	4.655	118.24	97.66	434.40	20.16	3.53
C2820-250-4250-M	2.820	71.63	0.250	6.35	4.250	107.95	1.940	49.27	1.609	40.86	185.11	823.42	80.13	14.02	**C2820-250-4250-S**	2.404	61.07	128.60	572.03	69.68	12.19
C2820-250-4500-M	2.820	71.63	0.250	6.35	4.500	114.30	2.036	51.71	1.681	42.70	185.11	823.42	75.12	13.15	**C2820-250-4500-S**	2.531	64.30	128.60	572.03	65.32	11.43
C2820-250-4750-M	2.820	71.63	0.250	6.35	4.750	120.65	2.132	54.15	1.753	44.53	185.11	823.42	70.70	12.37	**C2820-250-4750-S**	2.658	67.52	128.60	572.03	61.48	10.76
C2820-250-5000-M	2.820	71.63	0.250	6.35	5.000	127.00	2.228	56.58	1.825	46.37	185.11	823.42	66.77	11.69	**C2820-250-5000-S**	2.785	70.75	128.60	572.03	58.06	10.16
C2820-250-5250-M	2.820	71.63	0.250	6.35	5.250	133.35	2.324	59.02	1.898	48.20	185.11	823.42	63.26	11.07	**C2820-250-5250-S**	2.912	73.97	128.60	572.03	55.01	9.63
C2820-250-5500-M	2.820	71.63	0.250	6.35	5.500	139.70	2.420	61.46	1.970	50.04	185.11	823.42	60.10	10.52	**C2820-250-5500-S**	3.039	77.19	128.60	572.03	52.26	9.14
C2820-250-5750-M	2.820	71.63	0.250	6.35	5.750	146.05	2.516	63.90	2.042	51.87	185.11	823.42	57.23	10.02	**C2820-250-5750-S**	3.166	80.42	128.60	572.03	49.77	8.71
C2820-250-6000-M	2.820	71.63	0.250	6.35	6.000	152.40	2.612	66.34	2.114	53.71	185.11	823.42	54.63	9.56	**C2820-250-6000-S**	3.293	83.64	128.60	572.03	47.51	8.31
C2820-250-6250-M	2.820	71.63	0.250	6.35	6.250	158.75	2.708	68.77	2.187	55.54	185.11	823.42	52.26	9.14	**C2820-250-6250-S**	3.420	86.87	128.60	572.03	45.44	7.95
C2820-250-6500-M	2.820	71.63	0.250	6.35	6.500	165.10	2.804	71.21	2.259	57.38	185.11	823.42	50.08	8.76	**C2820-250-6500-S**	3.547	90.09	128.60	572.03	43.55	7.62
C2820-250-6750-M	2.820	71.63	0.250	6.35	6.750	171.45	2.900	73.65	2.331	59.21	185.11	823.42	48.08	8.41	**C2820-250-6750-S**	3.674	93.32	128.60	572.03	41.81	7.32
C2820-250-7000-M	2.820	71.63	0.250	6.35	7.000	177.80	2.996	76.09	2.403	61.05	185.11	823.42	46.23	8.09	**C2820-250-7000-S**	3.801	96.54	128.60	572.03	40.20	7.03
C2820-250-7500-M	2.820	71.63	0.250	6.35	7.500	190.50	3.188	80.97	2.548	64.72	185.11	823.42	42.93	7.51	**C2820-250-7500-S**	4.055	102.99	128.60	572.03	37.33	6.53
C2820-250-8000-M	2.820	71.63	0.250	6.35	8.000	203.20	3.380	85.84	2.692	68.39	185.11	823.42	40.06	7.01	**C2820-250-8000-S**	4.309	109.44	128.60	572.03	34.84	6.10
C2820-250-8500-M*	2.820	71.63	0.250	6.35	8.500	215.90	3.726	94.63	3.027	76.89	185.11	823.42	38.77	6.79	**C2820-250-8500-S***	4.686	119.02	128.60	572.03	33.72	5.90
C2820-250-9000-M*	2.820	71.63	0.250	6.35	9.000	228.60	3.918	99.51	3.172	80.56	185.11	823.42	36.42	6.37	**C2820-250-9000-S***	4.940	125.47	128.60	572.03	31.67	5.54
C2820-250-9500-M*	2.820	71.63	0.250	6.35	9.500	241.30	4.110	104.38	3.316	84.23	185.11	823.42	34.34	6.01	**C2820-250-9500-S***	5.194	131.92	128.60	572.03	29.86	5.23

Part Numbers with an "*" are squared and not ground. **Part Numbers in bold** represent the newly expanded Associated Spring RAYMOND compression spring offering.

COMPRESSION SPRINGS – 316 STAINLESS STEEL

Stock sizes in 316 Stainless Steel
Associated Spring RAYMOND now offers a complete line of 316 Stainless Steel compression springs. 316 Stainless Steel provides superior temperature and corrosion resistance, which makes it particularly suitable for:

- Medical, surgical, veterinary and pharmaceutical applications
- Food and food preparation machinery and equipment
- Marine, aircraft and aerospace uses
- Harsh environment projects

Material
Stainless steel: Type 316 per ASTM A313 (Chemical and Physical only).

Stainless steel is not recommended above 300 degrees C. (570 degrees F.).

Stainless Steel 316 is **slightly magnetic** due to cold working during manufacturing. Stainless steel springs may have a slight residue of nickel on the surface of the wire. This is normal and will not affect the function of the part.

Wire diameter is prior to forming.

No charge for certificate of compliance when requested; certificate of chemical analysis also available (an additional charge applies).

Coil Direction (helix)
Right hand. Coil count is for reference only.

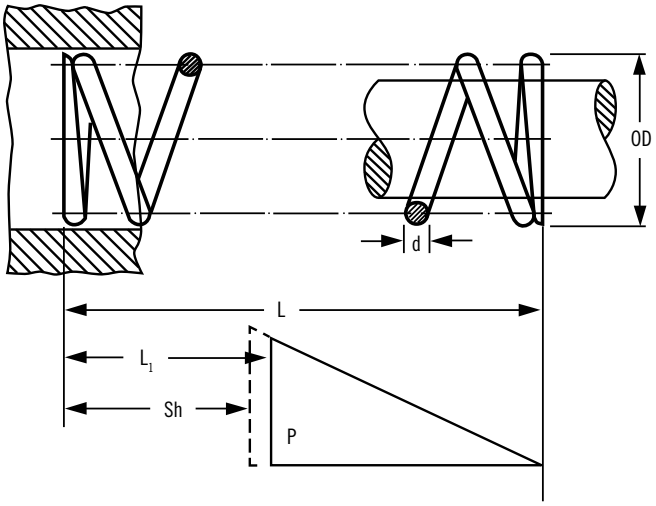

OD= Outside diameter
d = Wire diameter
Sh = Approx Solid Height
L = Free length (reference use only)
L_1 = Loaded length (minimum working length)
P = Load at L_1

Free Length
Free length is reference only.

Ends
Parts are squared and ground unless denoted with an *.
Parts ending with an * are squared and not ground.
However, springs with wire diameter ≤ 0.020" (.5mm) may be squared, not ground.

Tolerances

O.D. (English)	O.D. (Metric)
0.057 to 0.119" +/- 0.003"	1.45 to 3.02 mm +/- 0.08 mm
0.120 to 0.240" +/- 0.005"	3.05 to 6.10 mm +/- 0.13 mm
0.241 to 0.500" +/- 0.008"	6.12 to 12.70 mm +/- 0.20 mm
0.501 to 1.000" +/- 0.015"	12.73 to 25.40 mm +/- 0.38 mm
1.001 to 1.225" +/- 0.020"	25.43 to 31.12 mm +/- 0.51 mm
1.226 to 1.460" +/- 0.030"	31.14 to 37.08 mm +/- 0.76 mm
1.461 to 2.000" +/- 0.040"	37.11 to 50.80 mm +/- 1.02 mm

Loads & Spring Rate
Load P at L_1 and spring rate R are +/- 10.0% – load at any other point is for reference only.

For normal service, springs should not be compressed below L_1 (may take set beyond L_1). Load values at lengths other than L_1, can be approximated by multiplying the proposed deflection by the rate R. P = (L – Lx) x R where Lx is the new load height. Load at Lx should be reference only. Contact our engineering department if more stringent requirements are needed.

Surface Finish
Plain wire, passivated per ASTM A967.
Special finishes available upon request. See page 311 for alternative finishes.

Packaging
Parts are bulk-packed. Due to physical characteristics, tangling can occur during transit on wire sizes under .035" (.89mm). Please inquire about ultrasonic cleaning and special packaging when ordering.

316 STAINLESS STEEL

Catalog #	Outside Diameter (OD)		Wire Diameter (d)		Free Length (L) Approx		Load Length (L_1)		Solid Height (Sh) Approx		Load (P) at L_1		Spring Rate (R)	
	in	mm	in	mm	in	mm	in	mm	in	mm	lb	N	lb/in	N/mm
D20100X*	0.047	1.20	0.008	0.20	0.079	2.00	0.067	1.70	0.051	1.30	5.38	1.21	23.35	4.09
D20110X*	0.047	1.20	0.008	0.20	0.106	2.70	0.088	2.23	0.067	1.70	5.38	1.21	14.85	2.60
D20120X*	0.047	1.20	0.008	0.20	0.154	3.90	0.125	3.18	0.091	2.30	5.38	1.21	9.65	1.69
D20130X*	0.047	1.20	0.008	0.20	0.217	5.50	0.175	4.45	0.122	3.10	5.38	1.21	6.57	1.15
D20140X*	0.047	1.20	0.008	0.20	0.307	7.80	0.245	6.23	0.169	4.30	5.38	1.21	4.40	0.77
D20150X*	0.055	1.40	0.008	0.20	0.091	2.30	0.073	1.85	0.051	1.30	4.72	1.06	13.48	2.36
D20160X*	0.055	1.40	0.008	0.20	0.126	3.20	0.098	2.50	0.067	1.70	4.72	1.06	8.62	1.51
D20170X*	0.055	1.40	0.008	0.20	0.181	4.60	0.138	3.51	0.091	2.30	4.72	1.06	5.54	0.97
D20180X*	0.055	1.40	0.008	0.20	0.256	6.50	0.194	4.92	0.122	3.10	4.72	1.06	3.83	0.67
D20190X*	0.055	1.40	0.008	0.20	0.366	9.30	0.273	6.94	0.169	4.30	4.72	1.06	2.57	0.45
C0057-006-0120-X*	0.057	1.45	0.006	0.15	0.120	3.05	0.082	2.07	0.044	1.12	0.12	0.53	3.17	0.56
C0057-006-0190-X*	0.057	1.45	0.006	0.15	0.190	4.83	0.124	3.14	0.060	1.52	0.12	0.53	1.83	0.32
C0057-006-0250-X*	0.057	1.45	0.006	0.15	0.250	6.35	0.159	4.03	0.075	1.91	0.12	0.53	1.33	0.23
C0057-006-0310-X*	0.057	1.45	0.006	0.15	0.310	7.87	0.197	5.02	0.088	2.24	0.12	0.53	1.08	0.19
C0057-006-0380-X*	0.057	1.45	0.006	0.15	0.380	9.65	0.247	6.27	0.100	2.54	0.12	0.53	0.92	0.16
C0057-006-0440-X*	0.057	1.45	0.006	0.15	0.440	11.18	0.277	7.05	0.118	3.00	0.12	0.53	0.75	0.14
C0057-006-0500-X*	0.057	1.45	0.006	0.15	0.500	12.70	0.317	8.06	0.130	3.30	0.12	0.53	0.67	0.12
C0057-006-0560-X*	0.057	1.45	0.006	0.15	0.560	14.22	0.377	9.58	0.129	3.28	0.12	0.53	0.67	0.12
C0057-006-0620-X*	0.057	1.45	0.006	0.15	0.620	15.75	0.411	10.44	0.142	3.61	0.12	0.53	0.58	0.11
C0057-007-0120-X*	0.057	1.45	0.007	0.18	0.120	3.05	0.087	2.21	0.053	1.35	0.19	0.85	5.83	1.02
C0057-007-0190-X*	0.057	1.45	0.007	0.18	0.190	4.83	0.133	3.37	0.074	1.88	0.19	0.85	3.33	0.58
C0057-007-0250-X*	0.057	1.45	0.007	0.18	0.250	6.35	0.176	4.47	0.089	2.26	0.19	0.85	2.58	0.46
C0057-007-0310-X*	0.057	1.45	0.007	0.18	0.310	7.87	0.214	5.44	0.108	2.74	0.19	0.85	2.00	0.35
C0057-007-0380-X*	0.057	1.45	0.007	0.18	0.380	9.65	0.259	6.58	0.130	3.30	0.19	0.85	1.58	0.28
C0057-007-0440-X*	0.057	1.45	0.007	0.18	0.440	11.18	0.305	7.74	0.143	3.63	0.19	0.85	1.42	0.25
C0057-007-0500-X*	0.057	1.45	0.007	0.18	0.500	12.70	0.347	8.81	0.158	4.01	0.19	0.85	1.25	0.23
C0057-007-0560-X*	0.057	1.45	0.007	0.18	0.560	14.22	0.383	9.73	0.179	4.55	0.19	0.85	1.08	0.19
C0057-007-0620-X*	0.057	1.45	0.007	0.18	0.620	15.75	0.428	10.88	0.188	4.78	0.19	0.85	1.00	0.18
C0057-008-0120-X*	0.057	1.45	0.008	0.20	0.120	3.05	0.093	2.36	0.061	1.55	0.28	1.25	10.41	1.82
C0057-008-0190-X*	0.057	1.45	0.008	0.20	0.190	4.83	0.143	3.63	0.086	2.18	0.28	1.25	6.00	1.05
C0057-008-0250-X*	0.057	1.45	0.008	0.20	0.250	6.35	0.186	4.72	0.106	2.69	0.28	1.25	4.41	0.77
C0057-008-0310-X*	0.057	1.45	0.008	0.20	0.310	7.87	0.229	5.82	0.127	3.23	0.28	1.25	3.50	0.61
C0057-008-0380-X*	0.057	1.45	0.008	0.20	0.380	9.65	0.280	7.12	0.150	3.81	0.28	1.25	2.83	0.49
C0057-008-0440-X*	0.057	1.45	0.008	0.20	0.440	11.18	0.323	8.20	0.172	4.37	0.28	1.25	2.42	0.42
C0057-008-0500-X*	0.057	1.45	0.008	0.20	0.500	12.70	0.364	9.25	0.195	4.95	0.28	1.25	2.08	0.37
C0057-008-0560-X*	0.057	1.45	0.008	0.20	0.560	14.22	0.406	10.31	0.217	5.51	0.28	1.25	1.83	0.32
C0057-008-0620-X*	0.057	1.45	0.008	0.20	0.620	15.75	0.450	11.44	0.224	5.69	0.28	1.25	1.67	0.30
D20350X*	0.057	1.45	0.010	0.25	0.094	2.40	0.081	2.06	0.064	1.63	8.67	1.95	33.06	5.79
D20360X*	0.057	1.45	0.010	0.25	0.130	3.30	0.109	2.77	0.084	2.13	8.67	1.95	21.01	3.68
D20370X*	0.057	1.45	0.010	0.25	0.185	4.70	0.153	3.88	0.113	2.88	8.67	1.95	13.59	2.38
D20380X*	0.057	1.45	0.010	0.25	0.260	6.60	0.213	5.40	0.153	3.88	8.67	1.95	9.25	1.62
D20390X*	0.057	1.45	0.010	0.25	0.370	9.40	0.300	7.63	0.212	5.38	8.67	1.95	6.28	1.10
D20200X*	0.071	1.80	0.008	0.20	0.118	3.00	0.085	2.16	0.051	1.30	3.74	0.84	5.71	1.00
D20210X*	0.071	1.80	0.008	0.20	0.173	4.40	0.122	3.09	0.067	1.70	3.74	0.84	3.65	0.64
D20220X*	0.071	1.80	0.008	0.20	0.252	6.40	0.171	4.35	0.091	2.30	3.74	0.84	2.34	0.41
D20230X*	0.071	1.80	0.008	0.20	0.362	9.20	0.244	6.20	0.122	3.10	3.74	0.84	1.60	0.28
D20240X*	0.071	1.80	0.008	0.20	0.524	13.30	0.350	8.88	0.169	4.30	3.74	0.84	1.08	0.19
D20400X*	0.073	1.85	0.010	0.25	0.118	3.00	0.093	2.36	0.064	1.63	6.98	1.57	13.93	2.44
D20410X*	0.073	1.85	0.010	0.25	0.169	4.30	0.130	3.29	0.084	2.13	6.98	1.57	8.85	1.55
D20420X*	0.073	1.85	0.010	0.25	0.244	6.20	0.182	4.63	0.113	2.88	6.98	1.57	5.71	1.00
D20430X*	0.073	1.85	0.010	0.25	0.343	8.70	0.253	6.42	0.153	3.88	6.98	1.57	3.94	0.69
D20440X*	0.073	1.85	0.010	0.25	0.492	12.50	0.358	9.09	0.212	5.38	6.98	1.57	2.63	0.46
D20600X*	0.076	1.92	0.013	0.32	0.122	3.10	0.104	2.63	0.082	2.08	13.74	3.09	37.40	6.55
D20610X*	0.076	1.92	0.013	0.32	0.173	4.40	0.144	3.66	0.107	2.72	13.74	3.09	23.81	4.17
D20620X*	0.076	1.92	0.013	0.32	0.248	6.30	0.203	5.16	0.145	3.68	13.74	3.09	15.42	2.70
D20630X*	0.076	1.92	0.013	0.32	0.343	8.70	0.276	7.01	0.195	4.96	13.74	3.09	10.45	1.83
D20640X*	0.076	1.92	0.013	0.32	0.492	12.50	0.394	10.01	0.271	6.88	13.74	3.09	7.08	1.24
D20250X*	0.087	2.20	0.008	0.20	0.157	4.00	0.104	2.65	0.051	1.30	3.07	0.69	2.91	0.51
D20260X*	0.087	2.20	0.008	0.20	0.232	5.90	0.147	3.74	0.067	1.70	3.07	0.69	1.83	0.32
D20270X*	0.087	2.20	0.008	0.20	0.343	8.70	0.213	5.41	0.091	2.30	3.07	0.69	1.20	0.21
D20280X*	0.087	2.20	0.008	0.20	0.496	12.60	0.315	8.00	0.122	3.10	3.07	0.69	0.86	0.15
D20290X*	0.087	2.20	0.008	0.20	0.720	18.30	0.449	11.40	0.169	4.30	3.07	0.69	0.57	0.10
C0088-008-0120-X*	0.088	2.24	0.008	0.20	0.120	3.05	0.084	2.14	0.043	1.09	0.19	0.85	5.25	0.93
C0088-008-0190-X*	0.088	2.24	0.008	0.20	0.190	4.83	0.125	3.18	0.055	1.40	0.19	0.85	2.92	0.51

Part Numbers with an "*" are squared and not ground.

316 STAINLESS STEEL

Catalog #	Outside Diameter (OD)		Wire Diameter (d)		Free Length (L) Approx		Load Length (L_1)		Solid Height (Sh) Approx		Load (P) at L_1		Spring Rate (R)	
	in	mm	in	mm	in	mm	in	mm	in	mm	lb	N	lb/in	N/mm
C0088-008-0250-X*	0.088	2.24	0.008	0.20	0.250	6.35	0.163	4.14	0.064	1.63	0.19	0.85	2.17	0.39
C0088-008-0310-X*	0.088	2.24	0.008	0.20	0.310	7.87	0.202	5.14	0.073	1.85	0.19	0.85	1.75	0.32
C0088-008-0380-X*	0.088	2.24	0.008	0.20	0.380	9.65	0.247	6.27	0.084	2.13	0.19	0.85	1.42	0.25
C0088-008-0440-X*	0.088	2.24	0.008	0.20	0.440	11.18	0.289	7.34	0.092	2.34	0.19	0.85	1.25	0.23
C0088-008-0500-X*	0.088	2.24	0.008	0.20	0.500	12.70	0.326	8.28	0.101	2.57	0.19	0.85	1.08	0.19
C0088-008-0560-X*	0.088	2.24	0.008	0.20	0.560	14.22	0.354	9.00	0.115	2.92	0.19	0.85	0.92	0.16
C0088-008-0620-X*	0.088	2.24	0.008	0.20	0.620	15.75	0.394	10.00	0.119	3.02	0.19	0.85	0.83	0.14
C0088-010-0120-X*	0.088	2.24	0.010	0.25	0.120	3.05	0.085	2.16	0.060	1.52	0.36	1.60	10.25	1.80
C0088-010-0190-X*	0.088	2.24	0.010	0.25	0.190	4.83	0.127	3.23	0.081	2.06	0.36	1.60	5.66	1.00
C0088-010-0250-X*	0.088	2.24	0.010	0.25	0.250	6.35	0.164	4.18	0.098	2.49	0.36	1.60	4.17	0.74
C0088-010-0310-X*	0.088	2.24	0.010	0.25	0.310	7.87	0.197	5.02	0.118	3.00	0.36	1.60	3.17	0.56
C0088-010-0380-X*	0.088	2.24	0.010	0.25	0.380	9.65	0.250	6.36	0.130	3.30	0.36	1.60	2.75	0.49
C0088-010-0440-X*	0.088	2.24	0.010	0.25	0.440	11.18	0.287	7.30	0.147	3.73	0.36	1.60	2.33	0.40
C0088-010-0500-X*	0.088	2.24	0.010	0.25	0.500	12.70	0.314	7.98	0.172	4.37	0.36	1.60	1.92	0.33
C0088-010-0560-X*	0.088	2.24	0.010	0.25	0.560	14.22	0.356	9.05	0.185	4.70	0.36	1.60	1.75	0.32
C0088-010-0620-X*	0.088	2.24	0.010	0.25	0.620	15.75	0.395	10.03	0.201	5.11	0.36	1.60	1.58	0.28
C0088-010-0690-X*	0.088	2.24	0.010	0.25	0.690	17.53	0.438	11.14	0.213	5.41	0.36	1.60	1.42	0.25
C0088-010-0750-X*	0.088	2.24	0.010	0.25	0.750	19.05	0.483	12.26	0.228	5.79	0.36	1.60	1.33	0.23
C0088-012-0120-X*	0.088	2.24	0.012	0.30	0.120	3.05	0.090	2.30	0.075	1.91	0.61	2.71	20.49	3.59
C0088-012-0190-X*	0.088	2.24	0.012	0.30	0.190	4.83	0.140	3.55	0.100	2.54	0.61	2.71	12.08	2.12
C0088-012-0250-X*	0.088	2.24	0.012	0.30	0.250	6.35	0.181	4.59	0.123	3.12	0.61	2.71	8.75	1.54
C0088-012-0310-X*	0.088	2.24	0.012	0.30	0.310	7.87	0.219	5.56	0.148	3.76	0.61	2.71	6.66	1.17
C0088-012-0380-X*	0.088	2.24	0.012	0.30	0.380	9.65	0.268	6.80	0.172	4.37	0.61	2.71	5.41	0.95
C0088-012-0440-X*	0.088	2.24	0.012	0.30	0.440	11.18	0.312	7.93	0.191	4.85	0.61	2.71	4.75	0.84
C0088-012-0500-X*	0.088	2.24	0.012	0.30	0.500	12.70	0.351	8.92	0.215	5.46	0.61	2.71	4.08	0.72
C0088-012-0560-X*	0.088	2.24	0.012	0.30	0.560	14.22	0.394	10.02	0.235	5.97	0.61	2.71	3.67	0.65
C0088-012-0620-X*	0.088	2.24	0.012	0.30	0.620	15.75	0.428	10.88	0.265	6.73	0.61	2.71	3.17	0.56
C0088-012-0690-X*	0.088	2.24	0.012	0.30	0.690	17.53	0.482	12.24	0.266	6.76	0.61	2.71	2.92	0.51
C0088-012-0750-X*	0.088	2.24	0.012	0.30	0.750	19.05	0.522	13.27	0.293	7.44	0.61	2.71	2.67	0.47
D20450X*	0.089	2.25	0.010	0.25	0.146	3.70	0.104	2.65	0.064	1.63	5.83	1.31	7.14	1.25
D20460X*	0.089	2.25	0.010	0.25	0.217	5.50	0.151	3.84	0.084	2.13	5.83	1.31	4.51	0.79
D20470X*	0.089	2.25	0.010	0.25	0.315	8.00	0.214	5.43	0.113	2.88	5.83	1.31	2.91	0.51
D20480X*	0.089	2.25	0.010	0.25	0.449	11.40	0.302	7.66	0.153	3.88	5.83	1.31	2.00	0.35
D20490X*	0.089	2.25	0.010	0.25	0.654	16.60	0.439	11.14	0.212	5.38	5.83	1.31	1.37	0.24
D20650X*	0.091	2.32	0.013	0.32	0.146	3.70	0.115	2.92	0.082	2.08	11.61	2.61	19.13	3.35
D20660X*	0.091	2.32	0.013	0.32	0.209	5.30	0.161	4.08	0.107	2.72	11.61	2.61	12.22	2.14
D20670X*	0.091	2.32	0.013	0.32	0.303	7.70	0.229	5.81	0.145	3.68	11.61	2.61	7.88	1.38
D20680X*	0.091	2.32	0.013	0.32	0.429	10.90	0.320	8.12	0.195	4.96	11.61	2.61	5.37	0.94
D20690X*	0.091	2.32	0.013	0.32	0.614	15.60	0.454	11.52	0.271	6.88	11.61	2.61	3.65	0.64
D20850X*	0.094	2.40	0.016	0.40	0.138	3.50	0.113	2.88	0.102	2.60	21.31	4.79	44.31	7.76
D20860X*	0.094	2.40	0.016	0.40	0.197	5.00	0.158	4.02	0.134	3.40	21.31	4.79	27.98	4.90
D20870X*	0.094	2.40	0.016	0.40	0.276	7.00	0.217	5.50	0.181	4.60	21.31	4.79	18.22	3.19
D20880X*	0.094	2.40	0.016	0.40	0.394	10.00	0.307	7.79	0.244	6.20	21.31	4.79	12.39	2.17
D20890X*	0.094	2.40	0.016	0.40	0.551	14.00	0.423	10.74	0.339	8.60	21.31	4.79	8.39	1.47
D20300X*	0.106	2.70	0.008	0.20	0.213	5.40	0.126	3.21	0.051	1.30	2.54	0.57	1.48	0.26
D20310X*	0.106	2.70	0.008	0.20	0.323	8.20	0.191	4.85	0.067	1.70	2.54	0.57	0.97	0.17
D20320X*	0.106	2.70	0.008	0.20	0.488	12.40	0.284	7.22	0.091	2.30	2.54	0.57	0.63	0.11
D20330X*	0.106	2.70	0.008	0.20	0.705	17.90	0.384	9.76	0.122	3.10	2.54	0.57	0.40	0.07
D20340X*	0.106	2.70	0.008	0.20	1.031	26.20	0.583	14.80	0.169	4.30	2.54	0.57	0.29	0.05
D20500X*	0.108	2.75	0.010	0.25	0.193	4.90	0.126	3.21	0.064	1.63	4.80	1.08	3.65	0.64
D20510X*	0.108	2.75	0.010	0.25	0.287	7.30	0.184	4.67	0.084	2.13	4.80	1.08	2.34	0.41
D20520X*	0.108	2.75	0.010	0.25	0.429	10.90	0.266	6.75	0.113	2.88	4.80	1.08	1.48	0.26
D20530X*	0.108	2.75	0.010	0.25	0.618	15.70	0.382	9.70	0.153	3.88	4.80	1.08	1.03	0.18
D20540X*	0.108	2.75	0.010	0.25	0.902	22.90	0.547	13.90	0.212	5.38	4.80	1.08	0.69	0.12
D20700X*	0.111	2.82	0.013	0.32	0.185	4.70	0.135	3.43	0.082	2.08	9.70	2.18	9.82	1.72
D20710X*	0.111	2.82	0.013	0.32	0.268	6.80	0.189	4.80	0.107	2.72	9.70	2.18	6.22	1.09
D20720X*	0.111	2.82	0.013	0.32	0.394	10.00	0.273	6.93	0.145	3.68	9.70	2.18	4.05	0.71
D20730X*	0.111	2.82	0.013	0.32	0.559	14.20	0.380	9.66	0.195	4.96	9.70	2.18	2.74	0.48
D20740X*	0.111	2.82	0.013	0.32	0.811	20.60	0.543	13.79	0.271	6.88	9.70	2.18	1.83	0.32
D20900X*	0.114	2.90	0.016	0.40	0.169	4.30	0.129	3.28	0.102	2.60	18.02	4.05	22.67	3.97
D20910X*	0.114	2.90	0.016	0.40	0.248	6.30	0.185	4.70	0.134	3.40	18.02	4.05	14.45	2.53
D20920X*	0.114	2.90	0.016	0.40	0.358	9.10	0.261	6.62	0.181	4.60	18.02	4.05	9.31	1.63
D20930X*	0.114	2.90	0.016	0.40	0.512	13.00	0.368	9.35	0.244	6.20	18.02	4.05	6.34	1.11
D20940X*	0.114	2.90	0.016	0.40	0.728	18.50	0.516	13.10	0.339	8.60	18.02	4.05	4.28	0.75

FOR INFORMATION ON ALTERNATIVE FINISHES, SEE PAGE 311

Part Numbers with an "*" are squared and not ground.

316 STAINLESS STEEL

Catalog #	Outside Diameter (OD)		Wire Diameter (d)		Free Length (L) Approx		Load Length (L_1)		Solid Height (Sh) Approx		Load (P) at L_1		Spring Rate (R)	
	in	mm	in	mm	in	mm	in	mm	in	mm	lb	N	lb/in	N/mm
D21100X*	0.118	3.00	0.020	0.50	0.173	4.40	0.143	3.63	0.128	3.25	33.05	7.43	55.10	9.65
D21110X*	0.118	3.00	0.020	0.50	0.240	6.10	0.193	4.90	0.167	4.25	33.05	7.43	35.29	6.18
D21120X*	0.118	3.00	0.020	0.50	0.343	8.70	0.269	6.84	0.226	5.75	33.05	7.43	22.84	4.00
D21130X*	0.118	3.00	0.020	0.50	0.472	12.00	0.365	9.27	0.305	7.75	33.05	7.43	15.53	2.72
D21140X*	0.118	3.00	0.020	0.50	0.689	17.50	0.530	13.46	0.423	10.75	33.05	7.43	10.51	1.84
C0120-010-0250-X*	0.120	3.05	0.010	0.25	0.250	6.35	0.150	3.82	0.064	1.63	0.27	1.20	2.67	0.47
C0120-010-0310-X*	0.120	3.05	0.010	0.25	0.310	7.87	0.182	4.63	0.073	1.85	0.27	1.20	2.08	0.37
C0120-010-0380-X*	0.120	3.05	0.010	0.25	0.380	9.65	0.221	5.60	0.083	2.11	0.27	1.20	1.67	0.30
C0120-010-0440-X*	0.120	3.05	0.010	0.25	0.440	11.18	0.252	6.41	0.092	2.34	0.27	1.20	1.42	0.25
C0120-010-0500-X*	0.120	3.05	0.010	0.25	0.500	12.70	0.287	7.30	0.101	2.57	0.27	1.20	1.25	0.23
C0120-010-0560-X*	0.120	3.05	0.010	0.25	0.560	14.22	0.332	8.44	0.109	2.77	0.27	1.20	1.17	0.21
C0120-010-0620-X*	0.120	3.05	0.010	0.25	0.620	15.75	0.354	9.00	0.118	3.00	0.27	1.20	1.00	0.18
C0120-010-0690-X*	0.120	3.05	0.010	0.25	0.690	17.53	0.400	10.16	0.129	3.28	0.27	1.20	0.92	0.16
C0120-010-0750-X*	0.120	3.05	0.010	0.25	0.750	19.05	0.431	10.95	0.137	3.48	0.27	1.20	0.83	0.14
C0120-010-0810-X*	0.120	3.05	0.010	0.25	0.810	20.57	0.456	11.58	0.146	3.71	0.27	1.20	0.75	0.14
C0120-010-0880-X*	0.120	3.05	0.010	0.25	0.880	22.35	0.526	13.35	0.156	3.96	0.27	1.20	0.75	0.14
C0120-010-0940-X*	0.120	3.05	0.010	0.25	0.940	23.88	0.541	13.75	0.165	4.19	0.27	1.20	0.67	0.12
C0120-010-1000-X*	0.120	3.05	0.010	0.25	1.000	25.40	0.545	13.83	0.174	4.42	0.27	1.20	0.58	0.11
C0120-010-1120-X*	0.120	3.05	0.010	0.25	1.120	28.45	0.665	16.88	0.192	4.88	0.27	1.20	0.58	0.11
C0120-010-1250-X*	0.120	3.05	0.010	0.25	1.250	31.75	0.719	18.25	0.211	5.36	0.27	1.20	0.50	0.09
C0120-010-1500-X*	0.120	3.05	0.010	0.25	1.500	38.10	0.862	21.90	0.248	6.30	0.27	1.20	0.42	0.07
C0120-012-0250-X*	0.120	3.05	0.012	0.30	0.250	6.35	0.163	4.15	0.081	2.06	0.45	2.00	5.25	0.93
C0120-012-0310-X*	0.120	3.05	0.012	0.30	0.310	7.87	0.201	5.10	0.093	2.36	0.45	2.00	4.17	0.74
C0120-012-0380-X*	0.120	3.05	0.012	0.30	0.380	9.65	0.243	6.18	0.107	2.72	0.45	2.00	3.33	0.58
C0120-012-0440-X*	0.120	3.05	0.012	0.30	0.440	11.18	0.279	7.10	0.119	3.02	0.45	2.00	2.83	0.49
C0120-012-0500-X*	0.120	3.05	0.012	0.30	0.500	12.70	0.318	8.08	0.131	3.33	0.45	2.00	2.50	0.44
C0120-012-0560-X*	0.120	3.05	0.012	0.30	0.560	14.22	0.350	8.89	0.143	3.63	0.45	2.00	2.17	0.39
C0120-012-0620-X*	0.120	3.05	0.012	0.30	0.620	15.75	0.392	9.97	0.155	3.94	0.45	2.00	2.00	0.35
C0120-012-0690-X*	0.120	3.05	0.012	0.30	0.690	17.53	0.430	10.92	0.169	4.29	0.45	2.00	1.75	0.32
C0120-012-0750-X*	0.120	3.05	0.012	0.30	0.750	19.05	0.477	12.11	0.181	4.60	0.45	2.00	1.67	0.30
C0120-012-0810-X*	0.120	3.05	0.012	0.30	0.810	20.57	0.507	12.87	0.193	4.90	0.45	2.00	1.50	0.26
C0120-012-0880-X*	0.120	3.05	0.012	0.30	0.880	22.35	0.559	14.19	0.207	5.26	0.45	2.00	1.42	0.25
C0120-012-0940-X*	0.120	3.05	0.012	0.30	0.940	23.88	0.576	14.63	0.219	5.56	0.45	2.00	1.25	0.23
C0120-012-1000-X*	0.120	3.05	0.012	0.30	1.000	25.40	0.636	16.15	0.231	5.87	0.45	2.00	1.25	0.23
C0120-012-1120-X*	0.120	3.05	0.012	0.30	1.120	28.45	0.700	17.78	0.255	6.48	0.45	2.00	1.08	0.19
C0120-012-1250-X*	0.120	3.05	0.012	0.30	1.250	31.75	0.795	20.19	0.281	7.14	0.45	2.00	1.00	0.18
C0120-012-1500-X*	0.120	3.05	0.012	0.30	1.500	38.10	0.954	24.23	0.331	8.41	0.45	2.00	0.83	0.14
C0120-014-0250-X*	0.120	3.05	0.014	0.36	0.250	6.35	0.172	4.37	0.101	2.57	0.72	3.20	9.16	1.61
C0120-014-0310-X*	0.120	3.05	0.014	0.36	0.310	7.87	0.210	5.34	0.117	2.97	0.72	3.20	7.16	1.26
C0120-014-0380-X*	0.120	3.05	0.014	0.36	0.380	9.65	0.256	6.49	0.136	3.45	0.72	3.20	5.75	1.02
C0120-014-0440-X*	0.120	3.05	0.014	0.36	0.440	11.18	0.294	7.48	0.152	3.86	0.72	3.20	4.91	0.86
C0120-014-0500-X*	0.120	3.05	0.014	0.36	0.500	12.70	0.335	8.50	0.168	4.27	0.72	3.20	4.33	0.75
C0120-014-0560-X*	0.120	3.05	0.014	0.36	0.560	14.22	0.373	9.48	0.184	4.67	0.72	3.20	3.83	0.67
C0120-014-0620-X*	0.120	3.05	0.014	0.36	0.620	15.75	0.411	10.43	0.200	5.08	0.72	3.20	3.42	0.60
C0120-014-0690-X*	0.120	3.05	0.014	0.36	0.690	17.53	0.458	11.63	0.219	5.56	0.72	3.20	3.08	0.54
C0120-014-0750-X*	0.120	3.05	0.014	0.36	0.750	19.05	0.497	12.63	0.235	5.97	0.72	3.20	2.83	0.49
C0120-014-0810-X*	0.120	3.05	0.014	0.36	0.810	20.57	0.533	13.54	0.251	6.38	0.72	3.20	2.58	0.46
C0120-014-0880-X*	0.120	3.05	0.014	0.36	0.880	22.35	0.584	14.83	0.269	6.83	0.72	3.20	2.42	0.42
C0120-014-0940-X*	0.120	3.05	0.014	0.36	0.940	23.88	0.622	15.80	0.285	7.24	0.72	3.20	2.25	0.40
C0120-014-1000-X*	0.120	3.05	0.014	0.36	1.000	25.40	0.656	16.67	0.301	7.65	0.72	3.20	2.08	0.37
C0120-014-1120-X*	0.120	3.05	0.014	0.36	1.120	28.45	0.730	18.53	0.333	8.46	0.72	3.20	1.83	0.32
C0120-014-1250-X*	0.120	3.05	0.014	0.36	1.250	31.75	0.821	20.84	0.368	9.35	0.72	3.20	1.67	0.30
C0120-014-1500-X*	0.120	3.05	0.014	0.36	1.500	38.10	0.995	25.27	0.434	11.02	0.72	3.20	1.42	0.25
C0120-016-0190-X*	0.120	3.05	0.016	0.41	0.190	4.83	0.141	3.59	0.101	2.57	1.04	4.63	21.32	3.73
C0120-016-0250-X*	0.120	3.05	0.016	0.41	0.250	6.35	0.179	4.55	0.119	3.02	1.04	4.63	14.58	2.56
C0120-016-0310-X*	0.120	3.05	0.016	0.41	0.310	7.87	0.221	5.62	0.139	3.53	1.04	4.63	11.66	2.05
C0120-016-0380-X*	0.120	3.05	0.016	0.41	0.380	9.65	0.270	6.86	0.163	4.14	1.04	4.63	9.41	1.65
C0120-016-0440-X*	0.120	3.05	0.016	0.41	0.440	11.18	0.309	7.85	0.187	4.75	1.04	4.63	7.91	1.38
C0120-016-0500-X*	0.120	3.05	0.016	0.41	0.500	12.70	0.350	8.90	0.208	5.28	1.04	4.63	6.91	1.21
C0120-016-0560-X*	0.120	3.05	0.016	0.41	0.560	14.22	0.390	9.90	0.231	5.87	1.04	4.63	6.08	1.07
C0120-016-0620-X*	0.120	3.05	0.016	0.41	0.620	15.75	0.432	10.97	0.251	6.38	1.04	4.63	5.50	0.96
C0120-016-0690-X*	0.120	3.05	0.016	0.41	0.690	17.53	0.476	12.08	0.281	7.14	1.04	4.63	4.83	0.84
C0120-016-0750-X*	0.120	3.05	0.016	0.41	0.750	19.05	0.516	13.10	0.303	7.70	1.04	4.63	4.41	0.77
C0120-016-1000-X*	0.120	3.05	0.016	0.41	1.000	25.40	0.697	17.70	0.378	9.60	1.04	4.63	3.42	0.60

Part Numbers with an "*" are squared and not ground.

316 STAINLESS STEEL

Catalog #	Outside Diameter (OD)		Wire Diameter (d)		Free Length (L) Approx		Load Length (L_1)		Solid Height (Sh) Approx		Load (P) at L_1		Spring Rate (R)	
	in	mm	in	mm	in	mm	in	mm	in	mm	lb	N	lb/in	N/mm
C0120-016-1120-X*	0.120	3.05	0.016	0.41	1.120	28.45	0.775	19.68	0.419	10.64	1.04	4.63	3.00	0.53
C0120-016-1250-X*	0.120	3.05	0.016	0.41	1.250	31.75	0.862	21.89	0.463	11.76	1.04	4.63	2.67	0.47
C0120-016-1500-X*	0.120	3.05	0.016	0.41	1.500	38.10	1.056	26.83	0.544	13.82	1.04	4.63	2.33	0.40
C0120-018-0190-X*	0.120	3.05	0.018	0.46	0.190	4.83	0.148	3.75	0.117	2.97	1.46	6.49	34.40	6.02
C0120-018-0250-X*	0.120	3.05	0.018	0.46	0.250	6.35	0.188	4.77	0.139	3.53	1.46	6.49	23.49	4.12
C0120-018-0310-X*	0.120	3.05	0.018	0.46	0.310	7.87	0.230	5.84	0.166	4.22	1.46	6.49	18.24	3.19
C0120-018-0380-X*	0.120	3.05	0.018	0.46	0.380	9.65	0.282	7.17	0.194	4.93	1.46	6.49	14.91	2.61
C0120-018-0440-X*	0.120	3.05	0.018	0.46	0.440	11.18	0.325	8.25	0.220	5.59	1.46	6.49	12.66	2.22
C0120-018-0500-X*	0.120	3.05	0.018	0.46	0.500	12.70	0.366	9.31	0.248	6.30	1.46	6.49	10.91	1.91
C0120-018-0560-X*	0.120	3.05	0.018	0.46	0.560	14.22	0.407	10.33	0.279	7.09	1.46	6.49	9.50	1.66
C0120-018-0620-X*	0.120	3.05	0.018	0.46	0.620	15.75	0.455	11.56	0.297	7.54	1.46	6.49	8.83	1.54
C0120-018-0690-X*	0.120	3.05	0.018	0.46	0.690	17.53	0.502	12.75	0.332	8.43	1.46	6.49	7.75	1.37
C0120-018-0750-X*	0.120	3.05	0.018	0.46	0.750	19.05	0.544	13.82	0.359	9.12	1.46	6.49	7.08	1.24
C0120-018-1000-X*	0.120	3.05	0.018	0.46	1.000	25.40	0.727	18.46	0.455	11.56	1.46	6.49	5.33	0.93
C0120-018-1120-X*	0.120	3.05	0.018	0.46	1.120	28.45	0.813	20.65	0.505	12.83	1.46	6.49	4.75	0.84
C0120-018-1250-X*	0.120	3.05	0.018	0.46	1.250	31.75	0.907	23.04	0.559	14.20	1.46	6.49	4.25	0.75
C0120-018-1500-X*	0.120	3.05	0.018	0.46	1.500	38.10	1.083	27.52	0.663	16.84	1.46	6.49	3.50	0.61
C0120-020-0250-X*	0.120	3.05	0.020	0.51	0.250	6.35	0.197	5.01	0.163	4.14	1.97	8.76	37.32	6.53
C0120-020-0310-X*	0.120	3.05	0.020	0.51	0.310	7.87	0.242	6.14	0.192	4.88	1.97	8.76	28.99	5.08
C0120-020-0380-X*	0.120	3.05	0.020	0.51	0.380	9.65	0.294	7.48	0.226	5.74	1.97	8.76	23.07	4.05
C0120-020-0440-X*	0.120	3.05	0.020	0.51	0.440	11.18	0.339	8.61	0.256	6.50	1.97	8.76	19.58	3.43
C0120-020-0500-X*	0.120	3.05	0.020	0.51	0.500	12.70	0.384	9.75	0.285	7.24	1.97	8.76	16.99	2.98
C0120-020-0560-X*	0.120	3.05	0.020	0.51	0.560	14.22	0.429	10.90	0.314	7.98	1.97	8.76	15.08	2.64
C0120-020-0620-X*	0.120	3.05	0.020	0.51	0.620	15.75	0.474	12.03	0.344	8.74	1.97	8.76	13.49	2.36
C0120-020-0690-X*	0.120	3.05	0.020	0.51	0.690	17.53	0.527	13.37	0.378	9.60	1.97	8.76	12.08	2.12
C0120-020-0750-X*	0.120	3.05	0.020	0.51	0.750	19.05	0.570	14.49	0.407	10.34	1.97	8.76	11.00	1.93
C0120-020-0810-X*	0.120	3.05	0.020	0.51	0.810	20.57	0.616	15.64	0.437	11.10	1.97	8.76	10.16	1.79
C0120-020-0880-X*	0.120	3.05	0.020	0.51	0.880	22.35	0.668	16.98	0.471	11.96	1.97	8.76	9.33	1.63
C0120-020-0940-X*	0.120	3.05	0.020	0.51	0.940	23.88	0.712	18.09	0.500	12.70	1.97	8.76	8.66	1.52
C0120-020-1000-X*	0.120	3.05	0.020	0.51	1.000	25.40	0.758	19.26	0.530	13.46	1.97	8.76	8.16	1.44
C0120-020-1120-X*	0.120	3.05	0.020	0.51	1.120	28.45	0.848	21.53	0.588	14.94	1.97	8.76	7.25	1.28
C0120-020-1250-X*	0.120	3.05	0.020	0.51	1.250	31.75	0.946	24.03	0.652	16.56	1.97	8.76	6.50	1.14
C0120-020-1500-X*	0.120	3.05	0.020	0.51	1.500	38.10	1.130	28.69	0.774	19.66	1.97	8.76	5.33	0.93
C0120-022-0250-X	0.120	3.05	0.022	0.56	0.250	6.35	0.206	5.23	0.171	4.34	2.59	11.52	58.81	10.30
C0120-022-0310-X	0.120	3.05	0.022	0.56	0.310	7.87	0.252	6.39	0.209	5.31	2.59	11.52	44.40	7.78
C0120-022-0380-X	0.120	3.05	0.022	0.56	0.380	9.65	0.305	7.75	0.252	6.40	2.59	11.52	34.57	6.06
C0120-022-0440-X	0.120	3.05	0.022	0.56	0.440	11.18	0.354	9.00	0.280	7.11	2.59	11.52	30.32	5.31
C0120-022-0500-X	0.120	3.05	0.022	0.56	0.500	12.70	0.400	10.16	0.319	8.10	2.59	11.52	25.91	4.54
C0120-022-0560-X	0.120	3.05	0.022	0.56	0.560	14.22	0.450	11.42	0.346	8.79	2.59	11.52	23.49	4.12
C0120-022-0620-X	0.120	3.05	0.022	0.56	0.620	15.75	0.495	12.57	0.384	9.75	2.59	11.52	20.74	3.63
C0120-022-0690-X	0.120	3.05	0.022	0.56	0.690	17.53	0.543	13.80	0.442	11.23	2.59	11.52	17.66	3.10
C0120-022-0750-X	0.120	3.05	0.022	0.56	0.750	19.05	0.596	15.13	0.461	11.71	2.59	11.52	16.83	2.94
C0120-022-0810-X	0.120	3.05	0.022	0.56	0.810	20.57	0.643	16.34	0.494	12.55	2.59	11.52	15.58	2.73
C0120-022-0940-X	0.120	3.05	0.022	0.56	0.940	23.88	0.742	18.84	0.566	14.38	2.59	11.52	13.08	2.29
C0120-022-1000-X	0.120	3.05	0.022	0.56	1.000	25.40	0.788	20.02	0.600	15.24	2.59	11.52	12.25	2.15
C0120-022-1120-X	0.120	3.05	0.022	0.56	1.120	28.45	0.893	22.68	0.667	16.94	2.59	11.52	11.41	2.00
C0120-022-1250-X	0.120	3.05	0.022	0.56	1.250	31.75	0.984	24.99	0.739	18.77	2.59	11.52	9.75	1.72
C0120-022-1500-X	0.120	3.05	0.022	0.56	1.500	38.10	1.179	29.95	0.879	22.33	2.59	11.52	8.08	1.42
C0120-024-0310-X	0.120	3.05	0.024	0.61	0.310	7.87	0.262	6.64	0.229	5.82	3.32	14.77	68.56	12.01
C0120-024-0380-X	0.120	3.05	0.024	0.61	0.380	9.65	0.319	8.09	0.271	6.88	3.32	14.77	54.06	9.47
C0120-024-0440-X	0.120	3.05	0.024	0.61	0.440	11.18	0.368	9.34	0.307	7.80	3.32	14.77	45.82	8.02
C0120-024-0500-X	0.120	3.05	0.024	0.61	0.500	12.70	0.416	10.58	0.343	8.71	3.32	14.77	39.73	6.95
C0120-024-0560-X	0.120	3.05	0.024	0.61	0.560	14.22	0.465	11.82	0.379	9.63	3.32	14.77	35.07	6.15
C0120-024-0620-X	0.120	3.05	0.024	0.61	0.620	15.75	0.514	13.06	0.415	10.54	3.32	14.77	31.40	5.50
C0120-024-0690-X	0.120	3.05	0.024	0.61	0.690	17.53	0.571	14.51	0.457	11.61	3.32	14.77	27.99	4.90
C0120-024-0750-X	0.120	3.05	0.024	0.61	0.750	19.05	0.620	15.75	0.493	12.52	3.32	14.77	25.57	4.48
C0120-024-0810-X	0.120	3.05	0.024	0.61	0.810	20.57	0.669	17.00	0.529	13.44	3.32	14.77	23.57	4.13
C0120-024-0880-X	0.120	3.05	0.024	0.61	0.880	22.35	0.726	18.45	0.571	14.50	3.32	14.77	21.57	3.78
C0120-024-0940-X	0.120	3.05	0.024	0.61	0.940	23.88	0.775	19.69	0.607	15.42	3.32	14.77	20.16	3.54
C0120-024-1000-X	0.120	3.05	0.024	0.61	1.000	25.40	0.824	20.92	0.643	16.33	3.32	14.77	18.83	3.29
C0120-024-1120-X	0.120	3.05	0.024	0.61	1.120	28.45	0.922	23.41	0.715	18.16	3.32	14.77	16.74	2.92
C0120-024-1250-X	0.120	3.05	0.024	0.61	1.250	31.75	1.027	26.10	0.793	20.14	3.32	14.77	14.91	2.61
C0120-024-1500-X	0.120	3.05	0.024	0.61	1.500	38.10	1.233	31.31	0.943	23.95	3.32	14.77	12.41	2.17
D20550X*	0.136	3.45	0.010	0.25	0.280	7.10	0.165	4.20	0.064	1.63	3.87	0.87	1.71	0.30

FOR INFORMATION ON ALTERNATIVE FINISHES, SEE PAGE 311

Part Numbers with an "*" are squared and not ground.

316 STAINLESS STEEL

Catalog #	Outside Diameter (OD)		Wire Diameter (d)		Free Length (L) Approx		Load Length (L_1)		Solid Height (Sh) Approx		Load (P) at L_1		Spring Rate (R)	
	in	mm	in	mm	in	mm	in	mm	in	mm	lb	N	lb/in	N/mm
D20560X*	0.136	3.45	0.010	0.25	0.421	10.70	0.250	6.35	0.084	2.13	3.87	0.87	1.14	0.20
D20570X*	0.136	3.45	0.010	0.25	0.634	16.10	0.370	9.41	0.113	2.88	3.87	0.87	0.74	0.13
D20580X*	0.136	3.45	0.010	0.25	0.917	23.30	0.537	13.63	0.153	3.88	3.87	0.87	0.51	0.09
D20590X*	0.136	3.45	0.010	0.25	1.343	34.10	0.772	19.60	0.212	5.38	3.87	0.87	0.34	0.06
D20750X*	0.139	3.52	0.013	0.32	0.248	6.30	0.163	4.13	0.082	2.08	7.83	1.76	4.63	0.81
D20760X*	0.139	3.52	0.013	0.32	0.370	9.40	0.237	6.02	0.107	2.72	7.83	1.76	2.97	0.52
D20770X*	0.139	3.52	0.013	0.32	0.551	14.00	0.341	8.67	0.145	3.68	7.83	1.76	1.88	0.33
D20780X*	0.139	3.52	0.013	0.32	0.791	20.10	0.490	12.45	0.195	4.96	7.83	1.76	1.31	0.23
D20790X*	0.139	3.52	0.013	0.32	1.154	29.30	0.720	18.30	0.271	6.88	7.83	1.76	0.91	0.16
D20950X*	0.142	3.60	0.016	0.40	0.220	5.60	0.152	3.86	0.102	2.60	14.72	3.31	10.85	1.90
D20960X*	0.142	3.60	0.016	0.40	0.327	8.30	0.219	5.56	0.134	3.40	14.72	3.31	6.91	1.21
D20970X*	0.142	3.60	0.016	0.40	0.472	12.00	0.306	7.76	0.181	4.60	14.72	3.31	4.45	0.78
D20980X*	0.142	3.60	0.016	0.40	0.689	17.50	0.443	11.25	0.244	6.20	14.72	3.31	3.03	0.53
D20990X*	0.142	3.60	0.016	0.40	1.004	25.50	0.642	16.31	0.339	8.60	14.72	3.31	2.06	0.36
D21150X*	0.146	3.70	0.020	0.50	0.217	5.50	0.164	4.17	0.128	3.25	27.40	6.16	26.50	4.64
D21160X*	0.146	3.70	0.020	0.50	0.311	7.90	0.228	5.80	0.167	4.25	27.40	6.16	16.79	2.94
D21170X*	0.146	3.70	0.020	0.50	0.453	11.50	0.325	8.26	0.226	5.75	27.40	6.16	10.85	1.90
D21180X*	0.146	3.70	0.020	0.50	0.630	16.00	0.443	11.26	0.305	7.75	27.40	6.16	7.42	1.30
D21190X*	0.146	3.70	0.020	0.50	0.925	23.50	0.646	16.42	0.423	10.75	27.40	6.16	4.97	0.87
C0148-021-0250-X	0.148	3.76	0.021	0.53	0.250	6.35	0.187	4.74	0.143	3.63	1.89	8.41	29.74	5.20
C0148-021-0310-X	0.148	3.76	0.021	0.53	0.310	7.87	0.228	5.80	0.166	4.22	1.89	8.41	23.07	4.05
C0148-021-0380-X	0.148	3.76	0.021	0.53	0.380	9.65	0.277	7.04	0.193	4.90	1.89	8.41	18.33	3.20
C0148-021-0440-X	0.148	3.76	0.021	0.53	0.440	11.18	0.319	8.10	0.217	5.51	1.89	8.41	15.58	2.73
C0148-021-0500-X	0.148	3.76	0.021	0.53	0.500	12.70	0.360	9.15	0.240	6.10	1.89	8.41	13.49	2.36
C0148-021-0560-X	0.148	3.76	0.021	0.53	0.560	14.22	0.402	10.20	0.263	6.68	1.89	8.41	11.91	2.08
C0148-021-0620-X	0.148	3.76	0.021	0.53	0.620	15.75	0.443	11.25	0.286	7.26	1.89	8.41	10.66	1.87
C0148-021-0690-X	0.148	3.76	0.021	0.53	0.690	17.53	0.493	12.52	0.313	7.95	1.89	8.41	9.58	1.68
C0148-021-0750-X	0.148	3.76	0.021	0.53	0.750	19.05	0.534	13.57	0.336	8.53	1.89	8.41	8.75	1.54
C0148-021-0810-X	0.148	3.76	0.021	0.53	0.810	20.57	0.576	14.64	0.359	9.12	1.89	8.41	8.08	1.42
C0148-021-0880-X	0.148	3.76	0.021	0.53	0.880	22.35	0.626	15.89	0.386	9.80	1.89	8.41	7.41	1.30
C0148-021-0940-X	0.148	3.76	0.021	0.53	0.940	23.88	0.667	16.94	0.410	10.41	1.89	8.41	6.91	1.21
C0148-021-1000-X	0.148	3.76	0.021	0.53	1.000	25.40	0.710	18.02	0.433	11.00	1.89	8.41	6.50	1.14
C0148-021-1250-X	0.148	3.76	0.021	0.53	1.250	31.75	0.879	22.32	0.529	13.44	1.89	8.41	5.08	0.89
C0148-021-1500-X	0.148	3.76	0.021	0.53	1.500	38.10	1.056	26.82	0.626	15.90	1.89	8.41	4.25	0.75
C0148-023-0250-X	0.148	3.76	0.023	0.58	0.250	6.35	0.193	4.91	0.160	4.06	2.46	10.94	43.32	7.58
C0148-023-0310-X	0.148	3.76	0.023	0.58	0.310	7.87	0.236	6.01	0.187	4.75	2.46	10.94	33.40	5.85
C0148-023-0380-X	0.148	3.76	0.023	0.58	0.380	9.65	0.287	7.29	0.218	5.54	2.46	10.94	26.41	4.62
C0148-023-0440-X	0.148	3.76	0.023	0.58	0.440	11.18	0.330	8.39	0.245	6.22	2.46	10.94	22.41	3.92
C0148-023-0500-X	0.148	3.76	0.023	0.58	0.500	12.70	0.373	9.49	0.272	6.91	2.46	10.94	19.41	3.40
C0148-023-0560-X	0.148	3.76	0.023	0.58	0.560	14.22	0.417	10.59	0.299	7.59	2.46	10.94	17.16	3.01
C0148-023-0620-X	0.148	3.76	0.023	0.58	0.620	15.75	0.461	11.70	0.326	8.28	2.46	10.94	15.41	2.70
C0148-023-0690-X	0.148	3.76	0.023	0.58	0.690	17.53	0.511	12.99	0.357	9.07	2.46	10.94	13.74	2.40
C0148-023-0750-X	0.148	3.76	0.023	0.58	0.750	19.05	0.555	14.09	0.384	9.75	2.46	10.94	12.58	2.21
C0148-023-0810-X	0.148	3.76	0.023	0.58	0.810	20.57	0.598	15.19	0.410	10.41	2.46	10.94	11.58	2.03
C0148-023-0880-X	0.148	3.76	0.023	0.58	0.880	22.35	0.648	16.46	0.442	11.23	2.46	10.94	10.58	1.86
C0148-023-0940-X	0.148	3.76	0.023	0.58	0.940	23.88	0.692	17.58	0.469	11.91	2.46	10.94	9.91	1.73
C0148-023-1000-X	0.148	3.76	0.023	0.58	1.000	25.40	0.734	18.65	0.495	12.57	2.46	10.94	9.25	1.63
C0148-023-1250-X	0.148	3.76	0.023	0.58	1.250	31.75	0.915	23.24	0.607	15.42	2.46	10.94	7.33	1.28
C0148-023-1500-X	0.148	3.76	0.023	0.58	1.500	38.10	1.096	27.84	0.719	18.26	2.46	10.94	6.08	1.07
D21350X*	0.151	3.83	0.025	0.63	0.217	5.50	0.178	4.51	0.161	4.10	51.33	11.54	66.69	11.68
D21360X*	0.151	3.83	0.025	0.63	0.307	7.80	0.246	6.24	0.211	5.36	51.33	11.54	42.31	7.41
D21370X*	0.151	3.83	0.025	0.63	0.433	11.00	0.339	8.60	0.285	7.25	51.33	11.54	27.47	4.81
D21380X*	0.151	3.83	0.025	0.63	0.610	15.50	0.471	11.97	0.385	9.77	51.33	11.54	18.67	3.27
D21390X*	0.151	3.83	0.025	0.63	0.886	22.50	0.680	17.28	0.533	13.55	51.33	11.54	12.62	2.21
D20800X*	0.170	4.32	0.013	0.32	0.343	8.70	0.207	5.25	0.082	2.08	6.45	1.45	2.40	0.42
D20810X*	0.170	4.32	0.013	0.32	0.516	13.10	0.296	7.52	0.107	2.72	6.45	1.45	1.48	0.26
D20820X*	0.170	4.32	0.013	0.32	0.780	19.80	0.462	11.74	0.145	3.68	6.45	1.45	1.03	0.18
D20830X*	0.170	4.32	0.013	0.32	1.126	28.60	0.650	16.52	0.195	4.96	6.45	1.45	0.69	0.12
D20840X*	0.170	4.32	0.013	0.32	1.650	41.90	0.936	23.78	0.271	6.88	6.45	1.45	0.46	0.08
D21000X*	0.173	4.40	0.016	0.40	0.295	7.50	0.184	4.68	0.102	2.60	12.19	2.74	5.54	0.97
D21010X*	0.173	4.40	0.016	0.40	0.433	11.00	0.259	6.58	0.134	3.40	12.19	2.74	3.54	0.62
D21020X*	0.173	4.40	0.016	0.40	0.650	16.50	0.380	9.65	0.181	4.60	12.19	2.74	2.28	0.40
D21030X*	0.173	4.40	0.016	0.40	0.945	24.00	0.545	13.85	0.244	6.20	12.19	2.74	1.54	0.27
D21040X*	0.173	4.40	0.016	0.40	1.398	35.50	0.798	20.28	0.339	8.60	12.19	2.74	1.03	0.18

Part Numbers with an "*" are squared and not ground.

316 STAINLESS STEEL

Catalog #	Outside Diameter (OD)		Wire Diameter (d)		Free Length (L) Approx		Load Length (L_1)		Solid Height (Sh) Approx		Load (P) at L_1		Spring Rate (R)	
	in	mm	in	mm	in	mm	in	mm	in	mm	lb	N	lb/in	N/mm
D21200X*	0.177	4.50	0.020	0.50	0.276	7.00	0.190	4.82	0.128	3.25	22.86	5.14	13.48	2.36
D21210X*	0.177	4.50	0.020	0.50	0.394	10.00	0.260	6.60	0.167	4.25	22.86	5.14	8.62	1.51
D21220X*	0.177	4.50	0.020	0.50	0.591	15.00	0.382	9.70	0.226	5.75	22.86	5.14	5.54	0.97
D21230X*	0.177	4.50	0.020	0.50	0.846	21.50	0.540	13.71	0.305	7.75	22.86	5.14	3.77	0.66
D21240X*	0.177	4.50	0.020	0.50	1.220	31.00	0.771	19.58	0.423	10.75	22.86	5.14	2.57	0.45
C0180-012-0250-X*	0.180	4.57	0.012	0.30	0.250	6.35	0.147	3.74	0.057	1.45	0.31	1.38	3.00	0.53
C0180-012-0310-X*	0.180	4.57	0.012	0.30	0.310	7.87	0.182	4.63	0.062	1.57	0.31	1.38	2.42	0.42
C0180-012-0380-X*	0.180	4.57	0.012	0.30	0.380	9.65	0.219	5.56	0.069	1.75	0.31	1.38	1.92	0.33
C0180-012-0440-X*	0.180	4.57	0.012	0.30	0.440	11.18	0.255	6.47	0.074	1.88	0.31	1.38	1.67	0.30
C0180-012-0500-X*	0.180	4.57	0.012	0.30	0.500	12.70	0.282	7.17	0.080	2.03	0.31	1.38	1.42	0.25
C0180-012-0560-X*	0.180	4.57	0.012	0.30	0.560	14.22	0.313	7.95	0.085	2.16	0.31	1.38	1.25	0.23
C0180-012-0620-X*	0.180	4.57	0.012	0.30	0.620	15.75	0.355	9.03	0.091	2.31	0.31	1.38	1.17	0.21
C0180-012-0690-X*	0.180	4.57	0.012	0.30	0.690	17.53	0.381	9.69	0.097	2.46	0.31	1.38	1.00	0.18
C0180-012-0750-X*	0.180	4.57	0.012	0.30	0.750	19.05	0.413	10.50	0.103	2.62	0.31	1.38	0.92	0.16
C0180-012-0810-X*	0.180	4.57	0.012	0.30	0.810	20.57	0.440	11.17	0.109	2.77	0.31	1.38	0.83	0.14
C0180-012-0880-X*	0.180	4.57	0.012	0.30	0.880	22.35	0.510	12.95	0.115	2.92	0.31	1.38	0.83	0.14
C0180-012-0940-X*	0.180	4.57	0.012	0.30	0.940	23.88	0.529	13.42	0.121	3.07	0.31	1.38	0.75	0.14
C0180-012-1000-X*	0.180	4.57	0.012	0.30	1.000	25.40	0.537	13.64	0.126	3.20	0.31	1.38	0.67	0.12
C0180-012-1250-X*	0.180	4.57	0.012	0.30	1.250	31.75	0.721	18.31	0.149	3.78	0.31	1.38	0.58	0.11
C0180-012-1500-X*	0.180	4.57	0.012	0.30	1.500	38.10	0.883	22.42	0.172	4.37	0.31	1.38	0.50	0.09
C0180-014-0250-X*	0.180	4.57	0.014	0.36	0.250	6.35	0.156	3.95	0.069	1.75	0.49	2.18	5.16	0.91
C0180-014-0310-X*	0.180	4.57	0.014	0.36	0.310	7.87	0.191	4.84	0.076	1.93	0.49	2.18	4.08	0.72
C0180-014-0380-X*	0.180	4.57	0.014	0.36	0.380	9.65	0.230	5.84	0.085	2.16	0.49	2.18	3.25	0.58
C0180-014-0440-X*	0.180	4.57	0.014	0.36	0.440	11.18	0.268	6.81	0.092	2.34	0.49	2.18	2.83	0.49
C0180-014-0500-X*	0.180	4.57	0.014	0.36	0.500	12.70	0.298	7.58	0.100	2.54	0.49	2.18	2.42	0.42
C0180-014-0560-X*	0.180	4.57	0.014	0.36	0.560	14.22	0.335	8.51	0.107	2.72	0.49	2.18	2.17	0.39
C0180-014-0620-X*	0.180	4.57	0.014	0.36	0.620	15.75	0.366	9.29	0.114	2.90	0.49	2.18	1.92	0.33
C0180-014-0690-X*	0.180	4.57	0.014	0.36	0.690	17.53	0.411	10.45	0.123	3.12	0.49	2.18	1.75	0.32
C0180-014-0750-X*	0.180	4.57	0.014	0.36	0.750	19.05	0.442	11.23	0.130	3.30	0.49	2.18	1.58	0.28
C0180-014-0880-X*	0.180	4.57	0.014	0.36	0.880	22.35	0.514	13.07	0.146	3.71	0.49	2.18	1.33	0.23
C0180-014-1000-X*	0.180	4.57	0.014	0.36	1.000	25.40	0.582	14.79	0.161	4.09	0.49	2.18	1.17	0.21
C0180-014-1250-X*	0.180	4.57	0.014	0.36	1.250	31.75	0.718	18.24	0.191	4.85	0.49	2.18	0.92	0.16
C0180-014-1380-X*	0.180	4.57	0.014	0.36	1.380	35.05	0.795	20.20	0.207	5.26	0.49	2.18	0.83	0.14
C0180-014-1500-X*	0.180	4.57	0.014	0.36	1.500	38.10	0.850	21.59	0.222	5.64	0.49	2.18	0.75	0.14
C0180-016-0250-X*	0.180	4.57	0.016	0.41	0.250	6.35	0.154	3.92	0.080	2.03	0.71	3.16	7.41	1.30
C0180-016-0310-X*	0.180	4.57	0.016	0.41	0.310	7.87	0.197	5.00	0.087	2.21	0.71	3.16	6.25	1.10
C0180-016-0380-X*	0.180	4.57	0.016	0.41	0.380	9.65	0.236	5.99	0.100	2.54	0.71	3.16	4.91	0.86
C0180-016-0440-X*	0.180	4.57	0.016	0.41	0.440	11.18	0.267	6.77	0.112	2.84	0.71	3.16	4.08	0.72
C0180-016-0500-X*	0.180	4.57	0.016	0.41	0.500	12.70	0.298	7.56	0.124	3.15	0.71	3.16	3.50	0.61
C0180-016-0560-X*	0.180	4.57	0.016	0.41	0.560	14.22	0.330	8.39	0.136	3.45	0.71	3.16	3.08	0.54
C0180-016-0620-X*	0.180	4.57	0.016	0.41	0.620	15.75	0.370	9.40	0.144	3.66	0.71	3.16	2.83	0.49
C0180-016-0690-X*	0.180	4.57	0.016	0.41	0.690	17.53	0.416	10.56	0.155	3.94	0.71	3.16	2.58	0.46
C0180-016-0750-X*	0.180	4.57	0.016	0.41	0.750	19.05	0.446	11.34	0.167	4.24	0.71	3.16	2.33	0.40
C0180-016-0880-X*	0.180	4.57	0.016	0.41	0.880	22.35	0.540	13.72	0.185	4.70	0.71	3.16	2.08	0.37
C0180-016-1000-X*	0.180	4.57	0.016	0.41	1.000	25.40	0.614	15.59	0.204	5.18	0.71	3.16	1.83	0.32
C0180-016-1250-X*	0.180	4.57	0.016	0.41	1.250	31.75	0.750	19.05	0.245	6.22	0.71	3.16	1.42	0.25
C0180-016-1380-X*	0.180	4.57	0.016	0.41	1.380	35.05	0.849	21.56	0.266	6.76	0.71	3.16	1.33	0.23
C0180-016-1500-X*	0.180	4.57	0.016	0.41	1.500	38.10	0.893	22.68	0.285	7.24	0.71	3.16	1.17	0.21
C0180-016-1750-X*	0.180	4.57	0.016	0.41	1.750	44.45	1.042	26.46	0.326	8.28	0.71	3.16	1.00	0.18
C0180-018-0250-X*	0.180	4.57	0.018	0.46	0.250	6.35	0.161	4.09	0.094	2.39	1.00	4.45	11.25	1.98
C0180-018-0310-X*	0.180	4.57	0.018	0.46	0.310	7.87	0.204	5.19	0.103	2.62	1.00	4.45	9.50	1.66
C0180-018-0380-X*	0.180	4.57	0.018	0.46	0.380	9.65	0.251	6.37	0.116	2.95	1.00	4.45	7.75	1.37
C0180-018-0440-X*	0.180	4.57	0.018	0.46	0.440	11.18	0.286	7.26	0.130	3.30	1.00	4.45	6.50	1.14
C0180-018-0500-X*	0.180	4.57	0.018	0.46	0.500	12.70	0.320	8.14	0.144	3.66	1.00	4.45	5.58	0.98
C0180-018-0560-X*	0.180	4.57	0.018	0.46	0.560	14.22	0.349	8.86	0.162	4.11	1.00	4.45	4.75	0.84
C0180-018-0620-X*	0.180	4.57	0.018	0.46	0.620	15.75	0.384	9.76	0.175	4.45	1.00	4.45	4.25	0.75
C0180-018-0690-X*	0.180	4.57	0.018	0.46	0.690	17.53	0.428	10.88	0.189	4.80	1.00	4.45	3.83	0.67
C0180-018-0750-X*	0.180	4.57	0.018	0.46	0.750	19.05	0.457	11.60	0.207	5.26	1.00	4.45	3.42	0.60
C0180-018-0880-X*	0.180	4.57	0.018	0.46	0.880	22.35	0.555	14.09	0.227	5.77	1.00	4.45	3.08	0.54
C0180-018-1000-X*	0.180	4.57	0.018	0.46	1.000	25.40	0.624	15.85	0.252	6.40	1.00	4.45	2.67	0.47
C0180-018-1250-X*	0.180	4.57	0.018	0.46	1.250	31.75	0.787	20.00	0.303	7.70	1.00	4.45	2.17	0.39
C0180-018-1380-X*	0.180	4.57	0.018	0.46	1.380	35.05	0.857	21.77	0.330	8.38	1.00	4.45	1.92	0.33
C0180-018-1500-X*	0.180	4.57	0.018	0.46	1.500	38.10	0.927	23.55	0.355	9.02	1.00	4.45	1.75	0.32
C0180-018-1750-X*	0.180	4.57	0.018	0.46	1.750	44.45	1.082	27.47	0.406	10.31	1.00	4.45	1.50	0.26

FOR INFORMATION ON ALTERNATIVE FINISHES, SEE PAGE 311

Part Numbers with an "*" are squared and not ground.

316 STAINLESS STEEL

Catalog #	Outside Diameter (OD)		Wire Diameter (d)		Free Length (L) Approx		Load Length (L_1)		Solid Height (Sh) Approx		Load (P) at L_1		Spring Rate (R)	
	in	mm	in	mm	in	mm	in	mm	in	mm	lb	N	lb/in	N/mm
C0180-020-0250-X*	0.180	4.57	0.020	0.51	0.250	6.35	0.173	4.39	0.113	2.87	1.37	6.09	17.66	3.10
C0180-020-0310-X*	0.180	4.57	0.020	0.51	0.310	7.87	0.211	5.35	0.128	3.25	1.37	6.09	13.74	2.40
C0180-020-0380-X*	0.180	4.57	0.020	0.51	0.380	9.65	0.255	6.47	0.146	3.71	1.37	6.09	10.91	1.91
C0180-020-0440-X*	0.180	4.57	0.020	0.51	0.440	11.18	0.292	7.42	0.161	4.09	1.37	6.09	9.25	1.63
C0180-020-0500-X*	0.180	4.57	0.020	0.51	0.500	12.70	0.331	8.41	0.176	4.47	1.37	6.09	8.08	1.42
C0180-020-0560-X*	0.180	4.57	0.020	0.51	0.560	14.22	0.369	9.38	0.191	4.85	1.37	6.09	7.16	1.26
C0180-020-0620-X*	0.180	4.57	0.020	0.51	0.620	15.75	0.407	10.34	0.207	5.26	1.37	6.09	6.41	1.12
C0180-020-0690-X*	0.180	4.57	0.020	0.51	0.690	17.53	0.449	11.40	0.224	5.69	1.37	6.09	5.66	1.00
C0180-020-0750-X*	0.180	4.57	0.020	0.51	0.750	19.05	0.490	12.44	0.239	6.07	1.37	6.09	5.25	0.93
C0180-020-0880-X*	0.180	4.57	0.020	0.51	0.880	22.35	0.571	14.49	0.272	6.91	1.37	6.09	4.41	0.77
C0180-020-1000-X*	0.180	4.57	0.020	0.51	1.000	25.40	0.643	16.34	0.302	7.67	1.37	6.09	3.83	0.67
C0180-020-1250-X*	0.180	4.57	0.020	0.51	1.250	31.75	0.807	20.49	0.366	9.30	1.37	6.09	3.08	0.54
C0180-020-1380-X*	0.180	4.57	0.020	0.51	1.380	35.05	0.883	22.43	0.398	10.11	1.37	6.09	2.75	0.49
C0180-020-1500-X*	0.180	4.57	0.020	0.51	1.500	38.10	0.953	24.21	0.429	10.90	1.37	6.09	2.50	0.44
C0180-020-1750-X*	0.180	4.57	0.020	0.51	1.750	44.45	1.119	28.43	0.492	12.50	1.37	6.09	2.17	0.39
C0180-022-0250-X	0.180	4.57	0.022	0.56	0.250	6.35	0.177	4.49	0.121	3.07	1.81	8.05	24.66	4.33
C0180-022-0310-X	0.180	4.57	0.022	0.56	0.310	7.87	0.219	5.55	0.137	3.48	1.81	8.05	19.74	3.45
C0180-022-0380-X	0.180	4.57	0.022	0.56	0.380	9.65	0.270	6.87	0.154	3.91	1.81	8.05	16.49	2.89
C0180-022-0440-X	0.180	4.57	0.022	0.56	0.440	11.18	0.312	7.92	0.170	4.32	1.81	8.05	14.08	2.47
C0180-022-0500-X	0.180	4.57	0.022	0.56	0.500	12.70	0.347	8.82	0.192	4.88	1.81	8.05	11.83	2.07
C0180-022-0560-X	0.180	4.57	0.022	0.56	0.560	14.22	0.378	9.60	0.219	5.56	1.81	8.05	9.91	1.73
C0180-022-0620-X	0.180	4.57	0.022	0.56	0.620	15.75	0.413	10.50	0.241	6.12	1.81	8.05	8.75	1.54
C0180-022-0690-X	0.180	4.57	0.022	0.56	0.690	17.53	0.464	11.79	0.259	6.58	1.81	8.05	8.00	1.40
C0180-022-0750-X	0.180	4.57	0.022	0.56	0.750	19.05	0.501	12.72	0.280	7.11	1.81	8.05	7.25	1.28
C0180-022-0810-X	0.180	4.57	0.022	0.56	0.810	20.57	0.528	13.42	0.309	7.85	1.81	8.05	6.41	1.12
C0180-022-0940-X	0.180	4.57	0.022	0.56	0.940	23.88	0.626	15.89	0.337	8.56	1.81	8.05	5.75	1.02
C0180-022-1000-X	0.180	4.57	0.022	0.56	1.000	25.40	0.666	16.93	0.355	9.02	1.81	8.05	5.41	0.95
C0180-022-1120-X	0.180	4.57	0.022	0.56	1.120	28.45	0.746	18.95	0.391	9.93	1.81	8.05	4.83	0.84
C0180-022-1250-X	0.180	4.57	0.022	0.56	1.250	31.75	0.833	21.16	0.430	10.92	1.81	8.05	4.33	0.75
C0180-022-1500-X	0.180	4.57	0.022	0.56	1.500	38.10	0.996	25.29	0.506	12.85	1.81	8.05	3.58	0.63
C0180-022-1750-X	0.180	4.57	0.022	0.56	1.750	44.45	1.179	29.96	0.550	13.97	1.81	8.05	3.17	0.56
C0180-024-0250-X	0.180	4.57	0.024	0.61	0.250	6.35	0.184	4.67	0.143	3.63	2.33	10.36	35.24	6.16
C0180-024-0310-X	0.180	4.57	0.024	0.61	0.310	7.87	0.224	5.70	0.164	4.17	2.33	10.36	27.16	4.76
C0180-024-0380-X	0.180	4.57	0.024	0.61	0.380	9.65	0.271	6.89	0.189	4.80	2.33	10.36	21.41	3.75
C0180-024-0440-X	0.180	4.57	0.024	0.61	0.440	11.18	0.312	7.92	0.210	5.33	2.33	10.36	18.16	3.19
C0180-024-0500-X	0.180	4.57	0.024	0.61	0.500	12.70	0.352	8.94	0.232	5.89	2.33	10.36	15.74	2.75
C0180-024-0560-X	0.180	4.57	0.024	0.61	0.560	14.22	0.393	9.97	0.253	6.43	2.33	10.36	13.91	2.43
C0180-024-0620-X	0.180	4.57	0.024	0.61	0.620	15.75	0.432	10.98	0.274	6.96	2.33	10.36	12.41	2.17
C0180-024-0750-X	0.180	4.57	0.024	0.61	0.750	19.05	0.521	13.23	0.320	8.13	2.33	10.36	10.16	1.79
C0180-024-0880-X	0.180	4.57	0.024	0.61	0.880	22.35	0.609	15.46	0.366	9.30	2.33	10.36	8.58	1.51
C0180-024-1000-X	0.180	4.57	0.024	0.61	1.000	25.40	0.689	17.51	0.408	10.36	2.33	10.36	7.50	1.31
C0180-024-1120-X	0.180	4.57	0.024	0.61	1.120	28.45	0.771	19.57	0.450	11.43	2.33	10.36	6.66	1.17
C0180-024-1250-X	0.180	4.57	0.024	0.61	1.250	31.75	0.856	21.75	0.496	12.60	2.33	10.36	5.91	1.03
C0180-024-1500-X	0.180	4.57	0.024	0.61	1.500	38.10	1.026	26.06	0.585	14.86	2.33	10.36	4.91	0.86
C0180-024-1750-X	0.180	4.57	0.024	0.61	1.750	44.45	1.191	30.25	0.673	17.09	2.33	10.36	4.17	0.74
C0180-024-2000-X	0.180	4.57	0.024	0.61	2.000	50.80	1.365	34.66	0.761	19.33	2.33	10.36	3.67	0.65
C0180-026-0250-X	0.180	4.57	0.026	0.66	0.250	6.35	0.189	4.80	0.149	3.78	2.94	13.08	48.15	8.44
C0180-026-0310-X	0.180	4.57	0.026	0.66	0.310	7.87	0.235	5.97	0.168	4.27	2.94	13.08	39.15	6.86
C0180-026-0380-X	0.180	4.57	0.026	0.66	0.380	9.65	0.286	7.26	0.195	4.95	2.94	13.08	31.24	5.46
C0180-026-0440-X	0.180	4.57	0.026	0.66	0.440	11.18	0.327	8.30	0.221	5.61	2.94	13.08	25.99	4.55
C0180-026-0500-X	0.180	4.57	0.026	0.66	0.500	12.70	0.368	9.36	0.247	6.27	2.94	13.08	22.32	3.91
C0180-026-0560-X	0.180	4.57	0.026	0.66	0.560	14.22	0.410	10.41	0.272	6.91	2.94	13.08	19.58	3.43
C0180-026-0620-X	0.180	4.57	0.026	0.66	0.620	15.75	0.451	11.46	0.298	7.57	2.94	13.08	17.41	3.05
C0180-026-0690-X	0.180	4.57	0.026	0.66	0.690	17.53	0.502	12.76	0.324	8.23	2.94	13.08	15.66	2.75
C0180-026-0750-X	0.180	4.57	0.026	0.66	0.750	19.05	0.542	13.78	0.352	8.94	2.94	13.08	14.16	2.49
C0180-026-0810-X	0.180	4.57	0.026	0.66	0.810	20.57	0.584	14.83	0.377	9.58	2.94	13.08	12.99	2.28
C0180-026-0880-X	0.180	4.57	0.026	0.66	0.880	22.35	0.635	16.13	0.403	10.24	2.94	13.08	12.00	2.10
C0180-026-1000-X	0.180	4.57	0.026	0.66	1.000	25.40	0.711	18.05	0.461	11.71	2.94	13.08	10.16	1.79
C0180-026-1120-X	0.180	4.57	0.026	0.66	1.120	28.45	0.793	20.15	0.509	12.93	2.94	13.08	9.00	1.58
C0180-026-1250-X	0.180	4.57	0.026	0.66	1.250	31.75	0.886	22.51	0.562	14.27	2.94	13.08	8.08	1.42
C0180-026-1500-X	0.180	4.57	0.026	0.66	1.500	38.10	1.059	26.90	0.663	16.84	2.94	13.08	6.66	1.17
C0180-026-1750-X	0.180	4.57	0.026	0.66	1.750	44.45	1.231	31.27	0.764	19.41	2.94	13.08	5.66	1.00
C0180-026-2000-X	0.180	4.57	0.026	0.66	2.000	50.80	1.402	35.61	0.865	21.97	2.94	13.08	4.91	0.86
C0180-029-0250-X	0.180	4.57	0.029	0.74	0.250	6.35	0.198	5.03	0.172	4.37	4.03	17.93	77.55	13.59

Part Numbers with an "*" are squared and not ground.

316 STAINLESS STEEL

Catalog #	Outside Diameter (OD)		Wire Diameter (d)		Free Length (L) Approx		Load Length (L_1)		Solid Height (Sh) Approx		Load (P) at L_1		Spring Rate (R)	
	in	mm	in	mm	in	mm	in	mm	in	mm	lb	N	lb/in	N/mm
C0180-029-0310-X	0.180	4.57	0.029	0.74	0.310	7.87	0.242	6.14	0.208	5.28	4.03	17.93	59.14	10.35
C0180-029-0380-X	0.180	4.57	0.029	0.74	0.380	9.65	0.293	7.44	0.241	6.12	4.03	17.93	46.23	8.09
C0180-029-0440-X	0.180	4.57	0.029	0.74	0.440	11.18	0.337	8.55	0.270	6.86	4.03	17.93	38.98	6.83
C0180-029-0500-X	0.180	4.57	0.029	0.74	0.500	12.70	0.381	9.67	0.299	7.59	4.03	17.93	33.74	5.90
C0180-029-0560-X	0.180	4.57	0.029	0.74	0.560	14.22	0.424	10.77	0.327	8.31	4.03	17.93	29.65	5.20
C0180-029-0620-X	0.180	4.57	0.029	0.74	0.620	15.75	0.468	11.88	0.356	9.04	4.03	17.93	26.49	4.64
C0180-029-0690-X	0.180	4.57	0.029	0.74	0.690	17.53	0.519	13.18	0.390	9.91	4.03	17.93	23.57	4.13
C0180-029-0750-X	0.180	4.57	0.029	0.74	0.750	19.05	0.562	14.29	0.418	10.62	4.03	17.93	21.49	3.77
C0180-029-0810-X	0.180	4.57	0.029	0.74	0.810	20.57	0.607	15.41	0.447	11.35	4.03	17.93	19.83	3.47
C0180-029-0880-X	0.180	4.57	0.029	0.74	0.880	22.35	0.658	16.71	0.481	12.22	4.03	17.93	18.16	3.19
C0180-029-0940-X	0.180	4.57	0.029	0.74	0.940	23.88	0.702	17.82	0.509	12.93	4.03	17.93	16.91	2.96
C0180-029-1000-X	0.180	4.57	0.029	0.74	1.000	25.40	0.745	18.93	0.538	13.67	4.03	17.93	15.83	2.77
C0180-029-1120-X	0.180	4.57	0.029	0.74	1.120	28.45	0.832	21.13	0.596	15.14	4.03	17.93	13.99	2.45
C0180-029-1250-X	0.180	4.57	0.029	0.74	1.250	31.75	0.927	23.56	0.658	16.71	4.03	17.93	12.50	2.19
C0180-029-1380-X	0.180	4.57	0.029	0.74	1.380	35.05	1.022	25.95	0.720	18.29	4.03	17.93	11.25	1.98
C0180-029-1500-X	0.180	4.57	0.029	0.74	1.500	38.10	1.110	28.19	0.778	19.76	4.03	17.93	10.33	1.80
C0180-029-1750-X	0.180	4.57	0.029	0.74	1.750	44.45	1.294	32.86	0.897	22.78	4.03	17.93	8.83	1.54
C0180-029-2000-X	0.180	4.57	0.029	0.74	2.000	50.80	1.474	37.44	1.017	25.83	4.03	17.93	7.66	1.35
C0180-032-0310-X	0.180	4.57	0.032	0.81	0.310	7.87	0.258	6.55	0.206	5.23	5.35	23.80	102.21	17.90
C0180-032-0380-X	0.180	4.57	0.032	0.81	0.380	9.65	0.314	7.97	0.240	6.10	5.35	23.80	80.80	14.15
C0180-032-0440-X	0.180	4.57	0.032	0.81	0.440	11.18	0.357	9.07	0.280	7.11	5.35	23.80	64.56	11.31
C0180-032-0500-X	0.180	4.57	0.032	0.81	0.500	12.70	0.401	10.19	0.319	8.10	5.35	23.80	54.06	9.47
C0180-032-0560-X	0.180	4.57	0.032	0.81	0.560	14.22	0.451	11.46	0.343	8.71	5.35	23.80	49.06	8.60
C0180-032-0620-X	0.180	4.57	0.032	0.81	0.620	15.75	0.495	12.57	0.382	9.70	5.35	23.80	42.73	7.48
C0180-032-0690-X	0.180	4.57	0.032	0.81	0.690	17.53	0.555	14.09	0.406	10.31	5.35	23.80	39.57	6.94
C0180-032-0750-X	0.180	4.57	0.032	0.81	0.750	19.05	0.595	15.10	0.456	11.58	5.35	23.80	34.40	6.02
C0180-032-0810-X	0.180	4.57	0.032	0.81	0.810	20.57	0.638	16.20	0.496	12.60	5.35	23.80	31.07	5.45
C0180-032-0880-X	0.180	4.57	0.032	0.81	0.880	22.35	0.688	17.49	0.543	13.79	5.35	23.80	27.91	4.89
C0180-032-0940-X	0.180	4.57	0.032	0.81	0.940	23.88	0.735	18.67	0.576	14.63	5.35	23.80	26.07	4.57
C0180-032-1000-X	0.180	4.57	0.032	0.81	1.000	25.40	0.782	19.86	0.608	15.44	5.35	23.80	24.49	4.29
C0180-032-1120-X	0.180	4.57	0.032	0.81	1.120	28.45	0.869	22.08	0.677	17.20	5.35	23.80	21.32	3.73
C0180-032-1250-X	0.180	4.57	0.032	0.81	1.250	31.75	0.969	24.60	0.748	19.00	5.35	23.80	18.99	3.33
C0180-032-1380-X	0.180	4.57	0.032	0.81	1.380	35.05	1.068	27.14	0.819	20.80	5.35	23.80	17.16	3.01
C0180-032-1500-X	0.180	4.57	0.032	0.81	1.500	38.10	1.159	29.43	0.885	22.48	5.35	23.80	15.66	2.75
C0180-032-1750-X	0.180	4.57	0.032	0.81	1.750	44.45	1.351	34.33	1.023	25.98	5.35	23.80	13.41	2.35
C0180-032-2000-X	0.180	4.57	0.032	0.81	2.000	50.80	1.542	39.16	1.160	29.46	5.35	23.80	11.66	2.05
C0180-035-0380-X	0.180	4.57	0.035	0.89	0.380	9.65	0.320	8.12	0.286	7.26	6.90	30.69	114.12	19.98
C0180-035-0440-X	0.180	4.57	0.035	0.89	0.440	11.18	0.368	9.34	0.321	8.15	6.90	30.69	95.55	16.74
C0180-035-0500-X	0.180	4.57	0.035	0.89	0.500	12.70	0.416	10.57	0.356	9.04	6.90	30.69	82.22	14.40
C0180-035-0560-X	0.180	4.57	0.035	0.89	0.560	14.22	0.464	11.80	0.391	9.93	6.90	30.69	72.14	12.63
C0180-035-0620-X	0.180	4.57	0.035	0.89	0.620	15.75	0.513	13.02	0.426	10.82	6.90	30.69	64.31	11.26
C0180-035-0690-X	0.180	4.57	0.035	0.89	0.690	17.53	0.569	14.46	0.467	11.86	6.90	30.69	57.06	10.00
C0180-035-0750-X	0.180	4.57	0.035	0.89	0.750	19.05	0.617	15.68	0.502	12.75	6.90	30.69	51.98	9.11
C0180-035-0810-X	0.180	4.57	0.035	0.89	0.810	20.57	0.666	16.91	0.537	13.64	6.90	30.69	47.81	8.37
C0180-035-0880-X	0.180	4.57	0.035	0.89	0.880	22.35	0.722	18.34	0.578	14.68	6.90	30.69	43.65	7.65
C0180-035-0940-X	0.180	4.57	0.035	0.89	0.940	23.88	0.770	19.57	0.613	15.57	6.90	30.69	40.65	7.13
C0180-035-1000-X	0.180	4.57	0.035	0.89	1.000	25.40	0.819	20.80	0.648	16.46	6.90	30.69	38.07	6.67
C0180-035-1120-X	0.180	4.57	0.035	0.89	1.120	28.45	0.915	23.24	0.718	18.24	6.90	30.69	33.65	5.90
C0180-035-1250-X	0.180	4.57	0.035	0.89	1.250	31.75	1.020	25.91	0.793	20.14	6.90	30.69	29.99	5.25
C0180-035-1500-X	0.180	4.57	0.035	0.89	1.500	38.10	1.221	31.02	0.939	23.85	6.90	30.69	24.74	4.33
C0180-035-1750-X	0.180	4.57	0.035	0.89	1.750	44.45	1.423	36.14	1.085	27.56	6.90	30.69	21.07	3.70
C0180-035-2000-X	0.180	4.57	0.035	0.89	2.000	50.80	1.624	41.24	1.231	31.27	6.90	30.69	18.33	3.20
D21400X*	0.182	4.63	0.025	0.63	0.264	6.70	0.200	5.07	0.161	4.10	43.33	9.74	34.03	5.96
D21410X*	0.182	4.63	0.025	0.63	0.378	9.60	0.277	7.03	0.211	5.36	43.33	9.74	21.64	3.79
D21420X*	0.182	4.63	0.025	0.63	0.551	14.00	0.394	10.02	0.285	7.25	43.33	9.74	13.99	2.45
D21430X*	0.182	4.63	0.025	0.63	0.787	20.00	0.558	14.17	0.385	9.77	43.33	9.74	9.54	1.67
D21440X*	0.182	4.63	0.025	0.63	1.142	29.00	0.799	20.30	0.533	13.55	43.33	9.74	6.40	1.12
D21600X*	0.189	4.80	0.031	0.80	0.272	6.90	0.224	5.70	0.205	5.20	82.60	18.57	88.16	15.44
D21610X*	0.189	4.80	0.031	0.80	0.382	9.70	0.308	7.82	0.268	6.80	82.60	18.57	56.47	9.89
D21620X*	0.189	4.80	0.031	0.80	0.551	14.00	0.437	11.09	0.362	9.20	82.60	18.57	36.49	6.39
D21630X*	0.189	4.80	0.031	0.80	0.768	19.50	0.600	15.23	0.488	12.40	82.60	18.57	24.84	4.35
D21640X*	0.189	4.80	0.031	0.80	1.102	28.00	0.853	21.66	0.677	17.20	82.60	18.57	16.73	2.93
C0210-018-0250-X*	0.210	5.33	0.018	0.46	0.250	6.35	0.156	3.95	0.089	2.26	0.87	3.87	9.16	1.61
C0210-018-0310-X*	0.210	5.33	0.018	0.46	0.310	7.87	0.189	4.81	0.099	2.51	0.87	3.87	7.16	1.26

FOR INFORMATION ON ALTERNATIVE FINISHES, SEE PAGE 311

Part Numbers with an "*" are squared and not ground.

316 STAINLESS STEEL

Catalog #	Outside Diameter (OD)		Wire Diameter (d)		Free Length (L) Approx		Load Length (L_1)		Solid Height (Sh) Approx		Load (P) at L_1		Spring Rate (R)	
	in	mm	in	mm	in	mm	in	mm	in	mm	lb	N	lb/in	N/mm
C0210-018-0380-X*	0.210	5.33	0.018	0.46	0.380	9.65	0.227	5.77	0.110	2.79	0.87	3.87	5.66	1.00
C0210-018-0440-X*	0.210	5.33	0.018	0.46	0.440	11.18	0.261	6.63	0.120	3.05	0.87	3.87	4.83	0.84
C0210-018-0500-X*	0.210	5.33	0.018	0.46	0.500	12.70	0.296	7.52	0.130	3.30	0.87	3.87	4.25	0.75
C0210-018-0560-X*	0.210	5.33	0.018	0.46	0.560	14.22	0.329	8.36	0.140	3.56	0.87	3.87	3.75	0.67
C0210-018-0620-X*	0.210	5.33	0.018	0.46	0.620	15.75	0.360	9.15	0.150	3.81	0.87	3.87	3.33	0.58
C0210-018-0690-X*	0.210	5.33	0.018	0.46	0.690	17.53	0.401	10.19	0.161	4.09	0.87	3.87	3.00	0.53
C0210-018-0750-X*	0.210	5.33	0.018	0.46	0.750	19.05	0.435	11.05	0.171	4.34	0.87	3.87	2.75	0.49
C0210-018-0810-X*	0.210	5.33	0.018	0.46	0.810	20.57	0.464	11.78	0.181	4.60	0.87	3.87	2.50	0.44
C0210-018-0880-X*	0.210	5.33	0.018	0.46	0.880	22.35	0.509	12.93	0.192	4.88	0.87	3.87	2.33	0.40
C0210-018-1000-X*	0.210	5.33	0.018	0.46	1.000	25.40	0.567	14.40	0.212	5.38	0.87	3.87	2.00	0.35
C0210-018-1250-X*	0.210	5.33	0.018	0.46	1.250	31.75	0.703	17.86	0.253	6.43	0.87	3.87	1.58	0.28
C0210-018-1500-X*	0.210	5.33	0.018	0.46	1.500	38.10	0.851	21.60	0.294	7.47	0.87	3.87	1.33	0.23
C0210-018-1750-X*	0.210	5.33	0.018	0.46	1.750	44.45	1.008	25.60	0.334	8.48	0.87	3.87	1.17	0.21
C0210-018-2000-X*	0.210	5.33	0.018	0.46	2.000	50.80	1.134	28.81	0.375	9.53	0.87	3.87	1.00	0.18
C0210-022-0250-X	0.210	5.33	0.022	0.56	0.250	6.35	0.170	4.33	0.113	2.87	1.56	6.94	19.66	3.45
C0210-022-0310-X	0.210	5.33	0.022	0.56	0.310	7.87	0.207	5.27	0.127	3.23	1.56	6.94	15.24	2.66
C0210-022-0380-X	0.210	5.33	0.022	0.56	0.380	9.65	0.250	6.36	0.143	3.63	1.56	6.94	12.08	2.12
C0210-022-0440-X	0.210	5.33	0.022	0.56	0.440	11.18	0.287	7.30	0.157	3.99	1.56	6.94	10.25	1.80
C0210-022-0500-X	0.210	5.33	0.022	0.56	0.500	12.70	0.325	8.24	0.170	4.32	1.56	6.94	8.91	1.56
C0210-022-0560-X	0.210	5.33	0.022	0.56	0.560	14.22	0.360	9.15	0.184	4.67	1.56	6.94	7.83	1.37
C0210-022-0620-X	0.210	5.33	0.022	0.56	0.620	15.75	0.399	10.14	0.198	5.03	1.56	6.94	7.08	1.24
C0210-022-0690-X	0.210	5.33	0.022	0.56	0.690	17.53	0.440	11.17	0.214	5.44	1.56	6.94	6.25	1.10
C0210-022-0750-X	0.210	5.33	0.022	0.56	0.750	19.05	0.478	12.14	0.228	5.79	1.56	6.94	5.75	1.02
C0210-022-0810-X	0.210	5.33	0.022	0.56	0.810	20.57	0.517	13.12	0.241	6.12	1.56	6.94	5.33	0.93
C0210-022-0880-X	0.210	5.33	0.022	0.56	0.880	22.35	0.556	14.13	0.257	6.53	1.56	6.94	4.83	0.84
C0210-022-1000-X	0.210	5.33	0.022	0.56	1.000	25.40	0.632	16.05	0.285	7.24	1.56	6.94	4.25	0.75
C0210-022-1250-X	0.210	5.33	0.022	0.56	1.250	31.75	0.781	19.83	0.342	8.69	1.56	6.94	3.33	0.58
C0210-022-1500-X	0.210	5.33	0.022	0.56	1.500	38.10	0.931	23.65	0.399	10.13	1.56	6.94	2.75	0.49
C0210-022-1750-X	0.210	5.33	0.022	0.56	1.750	44.45	1.102	28.00	0.456	11.58	1.56	6.94	2.42	0.42
C0210-022-2000-X	0.210	5.33	0.022	0.56	2.000	50.80	1.249	31.72	0.514	13.06	1.56	6.94	2.08	0.37
C0210-026-0250-X	0.210	5.33	0.026	0.66	0.250	6.35	0.180	4.58	0.140	3.56	2.55	11.34	36.74	6.43
C0210-026-0310-X	0.210	5.33	0.026	0.66	0.310	7.87	0.220	5.58	0.159	4.04	2.55	11.34	28.24	4.94
C0210-026-0380-X	0.210	5.33	0.026	0.66	0.380	9.65	0.265	6.73	0.181	4.60	2.55	11.34	22.16	3.89
C0210-026-0440-X	0.210	5.33	0.026	0.66	0.440	11.18	0.304	7.72	0.200	5.08	2.55	11.34	18.74	3.27
C0210-026-0500-X	0.210	5.33	0.026	0.66	0.500	12.70	0.343	8.71	0.219	5.56	2.55	11.34	16.24	2.84
C0210-026-0560-X	0.210	5.33	0.026	0.66	0.560	14.22	0.382	9.70	0.237	6.02	2.55	11.34	14.33	2.50
C0210-026-0620-X	0.210	5.33	0.026	0.66	0.620	15.75	0.421	10.69	0.256	6.50	2.55	11.34	12.83	2.24
C0210-026-0690-X	0.210	5.33	0.026	0.66	0.690	17.53	0.466	11.84	0.278	7.06	2.55	11.34	11.41	2.00
C0210-026-0750-X	0.210	5.33	0.026	0.66	0.750	19.05	0.505	12.82	0.297	7.54	2.55	11.34	10.41	1.82
C0210-026-0810-X	0.210	5.33	0.026	0.66	0.810	20.57	0.543	13.80	0.316	8.03	2.55	11.34	9.58	1.68
C0210-026-0880-X	0.210	5.33	0.026	0.66	0.880	22.35	0.588	14.94	0.338	8.59	2.55	11.34	8.75	1.54
C0210-026-1000-X	0.210	5.33	0.026	0.66	1.000	25.40	0.667	16.94	0.376	9.55	2.55	11.34	7.66	1.35
C0210-026-1250-X	0.210	5.33	0.026	0.66	1.250	31.75	0.830	21.09	0.454	11.53	2.55	11.34	6.08	1.07
C0210-026-1500-X	0.210	5.33	0.026	0.66	1.500	38.10	0.989	25.12	0.533	13.54	2.55	11.34	5.00	0.88
C0210-026-1750-X	0.210	5.33	0.026	0.66	1.750	44.45	1.149	29.19	0.611	15.52	2.55	11.34	4.25	0.75
C0210-026-2000-X	0.210	5.33	0.026	0.66	2.000	50.80	1.319	33.50	0.689	17.50	2.55	11.34	3.75	0.67
D21050X*	0.213	5.40	0.016	0.40	0.413	10.50	0.236	6.00	0.102	2.60	10.01	2.25	2.86	0.50
D21060X*	0.213	5.40	0.016	0.40	0.630	16.00	0.353	8.97	0.134	3.40	10.01	2.25	1.83	0.32
D21070X*	0.213	5.40	0.016	0.40	0.945	24.00	0.523	13.29	0.181	4.60	10.01	2.25	1.20	0.21
D21080X*	0.213	5.40	0.016	0.40	1.378	35.00	0.745	18.93	0.244	6.20	10.01	2.25	0.80	0.14
D21090X*	0.213	5.40	0.016	0.40	2.087	53.00	1.102	28.00	0.339	8.60	10.01	2.25	0.51	0.09
D21250X*	0.217	5.50	0.020	0.50	0.370	9.40	0.233	5.92	0.128	3.25	18.90	4.25	6.97	1.22
D21260X*	0.217	5.50	0.020	0.50	0.551	14.00	0.334	8.48	0.167	4.25	18.90	4.25	4.40	0.77
D21270X*	0.217	5.50	0.020	0.50	0.807	20.50	0.479	12.17	0.226	5.75	18.90	4.25	2.91	0.51
D21280X*	0.217	5.50	0.020	0.50	1.181	30.00	0.689	17.50	0.305	7.75	18.90	4.25	1.94	0.34
D21290X*	0.217	5.50	0.020	0.50	1.752	44.50	0.991	25.18	0.423	10.75	18.90	4.25	1.26	0.22
D21450X*	0.222	5.63	0.025	0.63	0.335	8.50	0.230	5.85	0.161	4.10	36.16	8.13	17.53	3.07
D21460X*	0.222	5.63	0.025	0.63	0.492	12.50	0.329	8.35	0.211	5.36	36.16	8.13	11.19	1.96
D21470X*	0.222	5.63	0.025	0.63	0.728	18.50	0.480	12.20	0.285	7.25	36.16	8.13	7.37	1.29
D21480X*	0.222	5.63	0.025	0.63	1.024	26.00	0.652	16.55	0.385	9.77	36.16	8.13	4.91	0.86
D21490X*	0.222	5.63	0.025	0.63	1.516	38.50	0.964	24.48	0.533	13.55	36.16	8.13	3.31	0.58
D21650X*	0.228	5.80	0.031	0.80	0.327	8.30	0.249	6.33	0.205	5.20	69.75	15.68	45.34	7.94
D21660X*	0.228	5.80	0.031	0.80	0.472	12.00	0.350	8.90	0.268	6.80	69.75	15.68	28.89	5.06
D21670X*	0.228	5.80	0.031	0.80	0.689	17.50	0.500	12.70	0.362	9.20	69.75	15.68	18.67	3.27

Part Numbers with an "*" are squared and not ground.

316 STAINLESS STEEL

Catalog #	Outside Diameter (OD)		Wire Diameter (d)		Free Length (L) Approx		Load Length (L_1)		Solid Height (Sh) Approx		Load (P) at L_1		Spring Rate (R)	
	in	mm	in	mm	in	mm	in	mm	in	mm	lb	N	lb/in	N/mm
D21680X*	0.228	5.80	0.031	0.80	0.965	24.50	0.687	17.44	0.488	12.40	69.75	15.68	12.68	2.22
D21690X*	0.228	5.80	0.031	0.80	1.417	36.00	1.006	25.55	0.677	17.20	69.75	15.68	8.57	1.50
D21850X	0.236	6.00	0.039	1.00	0.335	8.50	0.277	7.03	0.217	5.50	126.91	28.53	110.55	19.36
D21860X	0.236	6.00	0.039	1.00	0.472	12.00	0.381	9.69	0.295	7.50	126.91	28.53	70.46	12.34
D21870X	0.236	6.00	0.039	1.00	0.669	17.00	0.528	13.42	0.413	10.50	126.91	28.53	45.51	7.97
D21880X	0.236	6.00	0.039	1.00	0.945	24.00	0.738	18.74	0.571	14.50	126.91	28.53	30.95	5.42
D21890X	0.236	6.00	0.039	1.00	1.358	34.50	1.052	26.73	0.807	20.50	126.91	28.53	20.96	3.67
C0240-016-0250-X*	0.240	6.10	0.016	0.41	0.250	6.35	0.146	3.71	0.070	1.78	0.54	2.40	5.16	0.91
C0240-016-0310-X*	0.240	6.10	0.016	0.41	0.310	7.87	0.176	4.46	0.076	1.93	0.54	2.40	4.00	0.70
C0240-016-0380-X*	0.240	6.10	0.016	0.41	0.380	9.65	0.215	5.45	0.083	2.11	0.54	2.40	3.25	0.58
C0240-016-0440-X*	0.240	6.10	0.016	0.41	0.440	11.18	0.245	6.21	0.089	2.26	0.54	2.40	2.75	0.49
C0240-016-0500-X*	0.240	6.10	0.016	0.41	0.500	12.70	0.278	7.05	0.095	2.41	0.54	2.40	2.42	0.42
C0240-016-0560-X*	0.240	6.10	0.016	0.41	0.560	14.22	0.302	7.67	0.101	2.57	0.54	2.40	2.08	0.37
C0240-016-0620-X*	0.240	6.10	0.016	0.41	0.620	15.75	0.340	8.63	0.107	2.72	0.54	2.40	1.92	0.33
C0240-016-0690-X*	0.240	6.10	0.016	0.41	0.690	17.53	0.368	9.34	0.114	2.90	0.54	2.40	1.67	0.30
C0240-016-0750-X*	0.240	6.10	0.016	0.41	0.750	19.05	0.411	10.43	0.120	3.05	0.54	2.40	1.58	0.28
C0240-016-0810-X*	0.240	6.10	0.016	0.41	0.810	20.57	0.431	10.94	0.126	3.20	0.54	2.40	1.42	0.25
C0240-016-0880-X*	0.240	6.10	0.016	0.41	0.880	22.35	0.477	12.12	0.133	3.38	0.54	2.40	1.33	0.23
C0240-016-1000-X*	0.240	6.10	0.016	0.41	1.000	25.40	0.540	13.70	0.145	3.68	0.54	2.40	1.17	0.21
C0240-016-1250-X*	0.240	6.10	0.016	0.41	1.250	31.75	0.664	16.86	0.170	4.32	0.54	2.40	0.92	0.16
C0240-016-1500-X*	0.240	6.10	0.016	0.41	1.500	38.10	0.784	19.91	0.195	4.95	0.54	2.40	0.75	0.14
C0240-016-1750-X*	0.240	6.10	0.016	0.41	1.750	44.45	0.944	23.98	0.220	5.59	0.54	2.40	0.67	0.12
C0240-016-2000-X*	0.240	6.10	0.016	0.41	2.000	50.80	1.079	27.41	0.245	6.22	0.54	2.40	0.58	0.11
C0240-018-0250-X*	0.240	6.10	0.018	0.46	0.250	6.35	0.154	3.91	0.080	2.03	0.76	3.38	7.91	1.38
C0240-018-0310-X*	0.240	6.10	0.018	0.46	0.310	7.87	0.186	4.74	0.088	2.24	0.76	3.38	6.16	1.09
C0240-018-0380-X*	0.240	6.10	0.018	0.46	0.380	9.65	0.225	5.72	0.096	2.44	0.76	3.38	4.91	0.86
C0240-018-0440-X*	0.240	6.10	0.018	0.46	0.440	11.18	0.257	6.53	0.103	2.62	0.76	3.38	4.17	0.74
C0240-018-0500-X*	0.240	6.10	0.018	0.46	0.500	12.70	0.292	7.42	0.111	2.82	0.76	3.38	3.67	0.65
C0240-018-0560-X*	0.240	6.10	0.018	0.46	0.560	14.22	0.326	8.27	0.118	3.00	0.76	3.38	3.25	0.58
C0240-018-0620-X*	0.240	6.10	0.018	0.46	0.620	15.75	0.359	9.11	0.126	3.20	0.76	3.38	2.92	0.51
C0240-018-0690-X*	0.240	6.10	0.018	0.46	0.690	17.53	0.395	10.04	0.134	3.40	0.76	3.38	2.58	0.46
C0240-018-0750-X*	0.240	6.10	0.018	0.46	0.750	19.05	0.424	10.76	0.141	3.58	0.76	3.38	2.33	0.40
C0240-018-0810-X*	0.240	6.10	0.018	0.46	0.810	20.57	0.458	11.64	0.149	3.78	0.76	3.38	2.17	0.39
C0240-018-0880-X*	0.240	6.10	0.018	0.46	0.880	22.35	0.499	12.68	0.157	3.99	0.76	3.38	2.00	0.35
C0240-018-1000-X*	0.240	6.10	0.018	0.46	1.000	25.40	0.565	14.34	0.172	4.37	0.76	3.38	1.75	0.32
C0240-018-1250-X*	0.240	6.10	0.018	0.46	1.250	31.75	0.712	18.09	0.203	5.16	0.76	3.38	1.42	0.25
C0240-018-1500-X*	0.240	6.10	0.018	0.46	1.500	38.10	0.847	21.51	0.233	5.92	0.76	3.38	1.17	0.21
C0240-018-1750-X*	0.240	6.10	0.018	0.46	1.750	44.45	0.988	25.10	0.264	6.71	0.76	3.38	1.00	0.18
C0240-018-2000-X*	0.240	6.10	0.018	0.46	2.000	50.80	1.086	27.58	0.294	7.47	0.76	3.38	0.83	0.14
C0240-020-0250-X*	0.240	6.10	0.020	0.51	0.250	6.35	0.161	4.10	0.091	2.31	1.04	4.63	11.75	2.07
C0240-020-0310-X*	0.240	6.10	0.020	0.51	0.310	7.87	0.196	4.99	0.099	2.51	1.04	4.63	9.16	1.61
C0240-020-0380-X*	0.240	6.10	0.020	0.51	0.380	9.65	0.236	6.01	0.110	2.79	1.04	4.63	7.25	1.28
C0240-020-0440-X*	0.240	6.10	0.020	0.51	0.440	11.18	0.271	6.89	0.118	3.00	1.04	4.63	6.16	1.09
C0240-020-0500-X*	0.240	6.10	0.020	0.51	0.500	12.70	0.305	7.74	0.127	3.23	1.04	4.63	5.33	0.93
C0240-020-0560-X*	0.240	6.10	0.020	0.51	0.560	14.22	0.341	8.66	0.136	3.45	1.04	4.63	4.75	0.84
C0240-020-0620-X*	0.240	6.10	0.020	0.51	0.620	15.75	0.375	9.53	0.145	3.68	1.04	4.63	4.25	0.75
C0240-020-0690-X*	0.240	6.10	0.020	0.51	0.690	17.53	0.419	10.63	0.155	3.94	1.04	4.63	3.83	0.67
C0240-020-0750-X*	0.240	6.10	0.020	0.51	0.750	19.05	0.453	11.50	0.164	4.17	1.04	4.63	3.50	0.61
C0240-020-0810-X*	0.240	6.10	0.020	0.51	0.810	20.57	0.481	12.23	0.172	4.37	1.04	4.63	3.17	0.56
C0240-020-0880-X*	0.240	6.10	0.020	0.51	0.880	22.35	0.523	13.29	0.182	4.62	1.04	4.63	2.92	0.51
C0240-020-1000-X*	0.240	6.10	0.020	0.51	1.000	25.40	0.597	15.17	0.200	5.08	1.04	4.63	2.58	0.46
C0240-020-1250-X*	0.240	6.10	0.020	0.51	1.250	31.75	0.730	18.53	0.236	5.99	1.04	4.63	2.00	0.35
C0240-020-1500-X*	0.240	6.10	0.020	0.51	1.500	38.10	0.876	22.24	0.273	6.93	1.04	4.63	1.67	0.30
C0240-020-1750-X*	0.240	6.10	0.020	0.51	1.750	44.45	1.015	25.79	0.309	7.85	1.04	4.63	1.42	0.25
C0240-020-2000-X*	0.240	6.10	0.020	0.51	2.000	50.80	1.168	29.65	0.346	8.79	1.04	4.63	1.25	0.23
C0240-022-0250-X	0.240	6.10	0.022	0.56	0.250	6.35	0.165	4.19	0.103	2.62	1.38	6.14	16.24	2.84
C0240-022-0310-X	0.240	6.10	0.022	0.56	0.310	7.87	0.200	5.09	0.113	2.87	1.38	6.14	12.58	2.21
C0240-022-0380-X	0.240	6.10	0.022	0.56	0.380	9.65	0.245	6.23	0.115	2.92	1.38	6.14	10.25	1.80
C0240-022-0440-X	0.240	6.10	0.022	0.56	0.440	11.18	0.269	6.84	0.131	3.33	1.38	6.14	8.08	1.42
C0240-022-0500-X	0.240	6.10	0.022	0.56	0.500	12.70	0.305	7.75	0.142	3.61	1.38	6.14	7.08	1.24
C0240-022-0560-X	0.240	6.10	0.022	0.56	0.560	14.22	0.339	8.62	0.154	3.91	1.38	6.14	6.25	1.10
C0240-022-0620-X	0.240	6.10	0.022	0.56	0.620	15.75	0.377	9.57	0.164	4.17	1.38	6.14	5.66	1.00
C0240-022-0690-X	0.240	6.10	0.022	0.56	0.690	17.53	0.423	10.75	0.175	4.45	1.38	6.14	5.16	0.91
C0240-022-0750-X	0.240	6.10	0.022	0.56	0.750	19.05	0.454	11.54	0.188	4.78	1.38	6.14	4.66	0.82

FOR INFORMATION ON ALTERNATIVE FINISHES, SEE PAGE 311

Part Numbers with an "*" are squared and not ground.

316 STAINLESS STEEL

Catalog #	Outside Diameter (OD)		Wire Diameter (d)		Free Length (L) Approx		Load Length (L_1)		Solid Height (Sh) Approx		Load (P) at L_1		Spring Rate (R)	
	in	mm	in	mm	in	mm	in	mm	in	mm	lb	N	lb/in	N/mm
C0240-022-0810-X	0.240	6.10	0.022	0.56	0.810	20.57	0.492	12.49	0.198	5.03	1.38	6.14	4.33	0.75
C0240-022-1000-X	0.240	6.10	0.022	0.56	1.000	25.40	0.606	15.39	0.236	5.99	1.38	6.14	3.50	0.61
C0240-022-1250-X	0.240	6.10	0.022	0.56	1.250	31.75	0.749	19.01	0.280	7.11	1.38	6.14	2.75	0.49
C0240-022-1500-X	0.240	6.10	0.022	0.56	1.500	38.10	0.909	23.09	0.325	8.26	1.38	6.14	2.33	0.40
C0240-022-1750-X	0.240	6.10	0.022	0.56	1.750	44.45	1.060	26.94	0.369	9.37	1.38	6.14	2.00	0.35
C0240-022-2000-X	0.240	6.10	0.022	0.56	2.000	50.80	1.212	30.78	0.413	10.49	1.38	6.14	1.75	0.32
C0240-024-0380-X	0.240	6.10	0.024	0.61	0.380	9.65	0.248	6.30	0.142	3.61	1.78	7.92	13.49	2.36
C0240-024-0440-X	0.240	6.10	0.024	0.61	0.440	11.18	0.284	7.21	0.155	3.94	1.78	7.92	11.41	2.00
C0240-024-0500-X	0.240	6.10	0.024	0.61	0.500	12.70	0.320	8.13	0.168	4.27	1.78	7.92	9.91	1.73
C0240-024-0560-X	0.240	6.10	0.024	0.61	0.560	14.22	0.356	9.05	0.180	4.57	1.78	7.92	8.75	1.54
C0240-024-0620-X	0.240	6.10	0.024	0.61	0.620	15.75	0.392	9.97	0.193	4.90	1.78	7.92	7.83	1.37
C0240-024-0690-X	0.240	6.10	0.024	0.61	0.690	17.53	0.435	11.06	0.208	5.28	1.78	7.92	7.00	1.23
C0240-024-0750-X	0.240	6.10	0.024	0.61	0.750	19.05	0.469	11.90	0.221	5.61	1.78	7.92	6.33	1.10
C0240-024-0810-X	0.240	6.10	0.024	0.61	0.810	20.57	0.504	12.81	0.233	5.92	1.78	7.92	5.83	1.02
C0240-024-0880-X	0.240	6.10	0.024	0.61	0.880	22.35	0.546	13.86	0.248	6.30	1.78	7.92	5.33	0.93
C0240-024-1000-X	0.240	6.10	0.024	0.61	1.000	25.40	0.618	15.70	0.274	6.96	1.78	7.92	4.66	0.82
C0240-024-1250-X	0.240	6.10	0.024	0.61	1.250	31.75	0.775	19.68	0.327	8.31	1.78	7.92	3.75	0.67
C0240-024-1500-X	0.240	6.10	0.024	0.61	1.500	38.10	0.922	23.42	0.379	9.63	1.78	7.92	3.08	0.54
C0240-024-1750-X	0.240	6.10	0.024	0.61	1.750	44.45	1.082	27.47	0.432	10.97	1.78	7.92	2.67	0.47
C0240-024-2000-X	0.240	6.10	0.024	0.61	2.000	50.80	1.208	30.68	0.485	12.32	1.78	7.92	2.25	0.40
C0240-026-0310-X	0.240	6.10	0.026	0.66	0.310	7.87	0.216	5.48	0.138	3.51	2.25	10.01	23.91	4.19
C0240-026-0380-X	0.240	6.10	0.026	0.66	0.380	9.65	0.264	6.70	0.143	3.63	2.25	10.01	19.41	3.40
C0240-026-0440-X	0.240	6.10	0.026	0.66	0.440	11.18	0.304	7.72	0.156	3.96	2.25	10.01	16.58	2.91
C0240-026-0500-X	0.240	6.10	0.026	0.66	0.500	12.70	0.344	8.75	0.169	4.29	2.25	10.01	14.49	2.54
C0240-026-0560-X	0.240	6.10	0.026	0.66	0.560	14.22	0.376	9.55	0.188	4.78	2.25	10.01	12.25	2.15
C0240-026-0620-X	0.240	6.10	0.026	0.66	0.620	15.75	0.407	10.33	0.208	5.28	2.25	10.01	10.58	1.86
C0240-026-0690-X	0.240	6.10	0.026	0.66	0.690	17.53	0.446	11.33	0.228	5.79	2.25	10.01	9.25	1.63
C0240-026-0750-X	0.240	6.10	0.026	0.66	0.750	19.05	0.479	12.18	0.246	6.25	2.25	10.01	8.33	1.45
C0240-026-0810-X	0.240	6.10	0.026	0.66	0.810	20.57	0.519	13.18	0.260	6.60	2.25	10.01	7.75	1.37
C0240-026-0880-X	0.240	6.10	0.026	0.66	0.880	22.35	0.558	14.17	0.281	7.14	2.25	10.01	7.00	1.23
C0240-026-1000-X	0.240	6.10	0.026	0.66	1.000	25.40	0.634	16.11	0.313	7.95	2.25	10.01	6.16	1.09
C0240-026-1250-X	0.240	6.10	0.026	0.66	1.250	31.75	0.791	20.10	0.375	9.53	2.25	10.01	4.91	0.86
C0240-026-1500-X	0.240	6.10	0.026	0.66	1.500	38.10	0.948	24.07	0.437	11.10	2.25	10.01	4.08	0.72
C0240-026-1750-X	0.240	6.10	0.026	0.66	1.750	44.45	1.090	27.68	0.499	12.67	2.25	10.01	3.42	0.60
C0240-026-2000-X	0.240	6.10	0.026	0.66	2.000	50.80	1.248	31.70	0.561	14.25	2.25	10.01	3.00	0.53
C0240-029-0380-X	0.240	6.10	0.029	0.74	0.380	9.65	0.263	6.69	0.185	4.70	3.11	13.83	26.66	4.68
C0240-029-0440-X	0.240	6.10	0.029	0.74	0.440	11.18	0.302	7.67	0.203	5.16	3.11	13.83	22.49	3.94
C0240-029-0500-X	0.240	6.10	0.029	0.74	0.500	12.70	0.340	8.64	0.221	5.61	3.11	13.83	19.41	3.40
C0240-029-0560-X	0.240	6.10	0.029	0.74	0.560	14.22	0.379	9.63	0.240	6.10	3.11	13.83	17.16	3.01
C0240-029-0620-X	0.240	6.10	0.029	0.74	0.620	15.75	0.417	10.60	0.258	6.55	3.11	13.83	15.33	2.68
C0240-029-0690-X	0.240	6.10	0.029	0.74	0.690	17.53	0.461	11.72	0.279	7.09	3.11	13.83	13.58	2.38
C0240-029-0750-X	0.240	6.10	0.029	0.74	0.750	19.05	0.500	12.69	0.298	7.57	3.11	13.83	12.41	2.17
C0240-029-0810-X	0.240	6.10	0.029	0.74	0.810	20.57	0.538	13.66	0.316	8.03	3.11	13.83	11.41	2.00
C0240-029-0880-X	0.240	6.10	0.029	0.74	0.880	22.35	0.584	14.84	0.337	8.56	3.11	13.83	10.50	1.84
C0240-029-0940-X	0.240	6.10	0.029	0.74	0.940	23.88	0.621	15.78	0.355	9.02	3.11	13.83	9.75	1.72
C0240-029-1000-X	0.240	6.10	0.029	0.74	1.000	25.40	0.661	16.79	0.374	9.50	3.11	13.83	9.16	1.61
C0240-029-1120-X	0.240	6.10	0.029	0.74	1.120	28.45	0.736	18.69	0.410	10.41	3.11	13.83	8.08	1.42
C0240-029-1250-X	0.240	6.10	0.029	0.74	1.250	31.75	0.821	20.87	0.450	11.43	3.11	13.83	7.25	1.28
C0240-029-1380-X	0.240	6.10	0.029	0.74	1.380	35.05	0.902	22.91	0.489	12.42	3.11	13.83	6.50	1.14
C0240-029-1500-X	0.240	6.10	0.029	0.74	1.500	38.10	0.982	24.95	0.526	13.36	3.11	13.83	6.00	1.05
C0240-029-1750-X	0.240	6.10	0.029	0.74	1.750	44.45	1.139	28.93	0.602	15.29	3.11	13.83	5.08	0.89
C0240-029-2000-X	0.240	6.10	0.029	0.74	2.000	50.80	1.297	32.93	0.678	17.22	3.11	13.83	4.41	0.77
C0240-032-0310-X	0.240	6.10	0.032	0.81	0.310	7.87	0.232	5.90	0.167	4.24	4.14	18.42	53.15	9.32
C0240-032-0380-X	0.240	6.10	0.032	0.81	0.380	9.65	0.288	7.31	0.184	4.67	4.14	18.42	44.82	7.85
C0240-032-0440-X	0.240	6.10	0.032	0.81	0.440	11.18	0.325	8.25	0.209	5.31	4.14	18.42	35.99	6.30
C0240-032-0500-X	0.240	6.10	0.032	0.81	0.500	12.70	0.365	9.27	0.232	5.89	4.14	18.42	30.65	5.38
C0240-032-0560-X	0.240	6.10	0.032	0.81	0.560	14.22	0.404	10.27	0.255	6.48	4.14	18.42	26.57	4.66
C0240-032-0620-X	0.240	6.10	0.032	0.81	0.620	15.75	0.442	11.24	0.279	7.09	4.14	18.42	23.32	4.08
C0240-032-0690-X	0.240	6.10	0.032	0.81	0.690	17.53	0.491	12.48	0.303	7.70	4.14	18.42	20.83	3.64
C0240-032-0750-X	0.240	6.10	0.032	0.81	0.750	19.05	0.523	13.29	0.335	8.51	4.14	18.42	18.24	3.19
C0240-032-0810-X	0.240	6.10	0.032	0.81	0.810	20.57	0.561	14.26	0.359	9.12	4.14	18.42	16.66	2.92
C0240-032-0880-X	0.240	6.10	0.032	0.81	0.880	22.35	0.610	15.49	0.384	9.75	4.14	18.42	15.33	2.68
C0240-032-0940-X	0.240	6.10	0.032	0.81	0.940	23.88	0.649	16.49	0.407	10.34	4.14	18.42	14.24	2.49
C0240-032-1000-X	0.240	6.10	0.032	0.81	1.000	25.40	0.687	17.46	0.431	10.95	4.14	18.42	13.24	2.31

SPEC TO ORDER: WWW.ASRAYMOND.COM OR SEE PHONE & FAX NUMBERS ON THE BACK COVER

Part Numbers with an "*" are squared and not ground.

316 STAINLESS STEEL

Catalog #	Outside Diameter (OD)		Wire Diameter (d)		Free Length (L) Approx		Load Length (L_1)		Solid Height (Sh) Approx		Load (P) at L_1		Spring Rate (R)	
	in	mm	in	mm	in	mm	in	mm	in	mm	lb	N	lb/in	N/mm
C0240-032-1250-X	0.240	6.10	0.032	0.81	1.250	31.75	0.852	21.65	0.526	13.36	4.14	18.42	10.41	1.82
C0240-032-1380-X	0.240	6.10	0.032	0.81	1.380	35.05	0.936	23.78	0.573	14.55	4.14	18.42	9.33	1.63
C0240-032-1500-X	0.240	6.10	0.032	0.81	1.500	38.10	1.017	25.84	0.616	15.65	4.14	18.42	8.58	1.51
C0240-032-1750-X	0.240	6.10	0.032	0.81	1.750	44.45	1.185	30.10	0.707	17.96	4.14	18.42	7.33	1.28
C0240-032-2000-X	0.240	6.10	0.032	0.81	2.000	50.80	1.346	34.19	0.797	20.24	4.14	18.42	6.33	1.10
C0240-035-0310-X	0.240	6.10	0.035	0.89	0.310	7.87	0.236	5.99	0.206	5.23	5.37	23.89	72.39	12.68
C0240-035-0380-X	0.240	6.10	0.035	0.89	0.380	9.65	0.284	7.22	0.235	5.97	5.37	23.89	56.06	9.82
C0240-035-0440-X	0.240	6.10	0.035	0.89	0.440	11.18	0.326	8.27	0.260	6.60	5.37	23.89	46.98	8.23
C0240-035-0500-X	0.240	6.10	0.035	0.89	0.500	12.70	0.367	9.32	0.286	7.26	5.37	23.89	40.40	7.08
C0240-035-0560-X	0.240	6.10	0.035	0.89	0.560	14.22	0.409	10.38	0.311	7.90	5.37	23.89	35.49	6.22
C0240-035-0620-X	0.240	6.10	0.035	0.89	0.620	15.75	0.450	11.43	0.336	8.53	5.37	23.89	31.57	5.53
C0240-035-0690-X	0.240	6.10	0.035	0.89	0.690	17.53	0.498	12.65	0.366	9.30	5.37	23.89	27.99	4.90
C0240-035-0750-X	0.240	6.10	0.035	0.89	0.750	19.05	0.540	13.71	0.391	9.93	5.37	23.89	25.57	4.48
C0240-035-0810-X	0.240	6.10	0.035	0.89	0.810	20.57	0.581	14.77	0.416	10.57	5.37	23.89	23.49	4.12
C0240-035-0880-X	0.240	6.10	0.035	0.89	0.880	22.35	0.629	15.98	0.445	11.30	5.37	23.89	21.41	3.75
C0240-035-0940-X	0.240	6.10	0.035	0.89	0.940	23.88	0.671	17.05	0.471	11.96	5.37	23.89	19.99	3.50
C0240-035-1000-X	0.240	6.10	0.035	0.89	1.000	25.40	0.712	18.09	0.496	12.60	5.37	23.89	18.66	3.27
C0240-035-1250-X	0.240	6.10	0.035	0.89	1.250	31.75	0.886	22.50	0.601	15.27	5.37	23.89	14.74	2.57
C0240-035-1380-X	0.240	6.10	0.035	0.89	1.380	35.05	0.974	24.75	0.656	16.66	5.37	23.89	13.24	2.31
C0240-035-1500-X	0.240	6.10	0.035	0.89	1.500	38.10	1.058	26.88	0.706	17.93	5.37	23.89	12.16	2.14
C0240-035-1750-X	0.240	6.10	0.035	0.89	1.750	44.45	1.230	31.24	0.811	20.60	5.37	23.89	10.33	1.80
C0240-035-2000-X	0.240	6.10	0.035	0.89	2.000	50.80	1.403	35.63	0.916	23.27	5.37	23.89	9.00	1.58
C0240-035-2250-X	0.240	6.10	0.035	0.89	2.250	57.15	1.578	40.09	1.021	25.93	5.37	23.89	8.00	1.40
C0240-035-2500-X	0.240	6.10	0.035	0.89	2.500	63.50	1.750	44.45	1.126	28.60	5.37	23.89	7.16	1.26
C0240-038-0310-X	0.240	6.10	0.038	0.97	0.310	7.87	0.246	6.24	0.208	5.28	6.81	30.29	105.87	18.55
C0240-038-0380-X	0.240	6.10	0.038	0.97	0.380	9.65	0.299	7.60	0.237	6.02	6.81	30.29	84.55	14.82
C0240-038-0440-X	0.240	6.10	0.038	0.97	0.440	11.18	0.343	8.71	0.265	6.73	6.81	30.29	70.31	12.31
C0240-038-0500-X	0.240	6.10	0.038	0.97	0.500	12.70	0.387	9.83	0.294	7.47	6.81	30.29	60.23	10.54
C0240-038-0560-X	0.240	6.10	0.038	0.97	0.560	14.22	0.431	10.94	0.323	8.20	6.81	30.29	52.65	9.23
C0240-038-0620-X	0.240	6.10	0.038	0.97	0.620	15.75	0.475	12.06	0.350	8.89	6.81	30.29	46.98	8.23
C0240-038-0690-X	0.240	6.10	0.038	0.97	0.690	17.53	0.529	13.43	0.379	9.63	6.81	30.29	42.23	7.39
C0240-038-0750-X	0.240	6.10	0.038	0.97	0.750	19.05	0.573	14.54	0.407	10.34	6.81	30.29	38.40	6.72
C0240-038-0810-X	0.240	6.10	0.038	0.97	0.810	20.57	0.616	15.65	0.436	11.07	6.81	30.29	35.15	6.16
C0240-038-0880-X	0.240	6.10	0.038	0.97	0.880	22.35	0.665	16.88	0.474	12.04	6.81	30.29	31.65	5.55
C0240-038-0940-X	0.240	6.10	0.038	0.97	0.940	23.88	0.704	17.87	0.511	12.98	6.81	30.29	28.82	5.04
C0240-038-1000-X	0.240	6.10	0.038	0.97	1.000	25.40	0.747	18.97	0.541	13.74	6.81	30.29	26.91	4.71
C0240-038-1120-X	0.240	6.10	0.038	0.97	1.120	28.45	0.835	21.21	0.597	15.16	6.81	30.29	23.91	4.19
C0240-038-1250-X	0.240	6.10	0.038	0.97	1.250	31.75	0.933	23.70	0.653	16.59	6.81	30.29	21.49	3.77
C0240-038-1380-X	0.240	6.10	0.038	0.97	1.380	35.05	1.030	26.17	0.711	18.06	6.81	30.29	19.49	3.41
C0240-038-1500-X	0.240	6.10	0.038	0.97	1.500	38.10	1.118	28.39	0.768	19.51	6.81	30.29	17.83	3.12
C0240-038-1750-X	0.240	6.10	0.038	0.97	1.750	44.45	1.277	32.44	0.912	23.16	6.81	30.29	14.41	2.52
C0240-038-2000-X	0.240	6.10	0.038	0.97	2.000	50.80	1.458	37.04	1.032	26.21	6.81	30.29	12.58	2.21
C0240-038-2250-X	0.240	6.10	0.038	0.97	2.250	57.15	1.635	41.53	1.151	29.24	6.81	30.29	11.08	1.94
C0240-038-2500-X	0.240	6.10	0.038	0.97	2.500	63.50	1.818	46.18	1.270	32.26	6.81	30.29	10.00	1.75
C0240-040-0310-X	0.240	6.10	0.040	1.02	0.310	7.87	0.249	6.33	0.220	5.59	7.90	35.14	129.78	22.73
C0240-040-0380-X	0.240	6.10	0.040	1.02	0.380	9.65	0.301	7.63	0.274	6.96	7.90	35.14	99.46	17.43
C0240-040-0440-X	0.240	6.10	0.040	1.02	0.440	11.18	0.345	8.76	0.305	7.75	7.90	35.14	82.88	14.52
C0240-040-0500-X	0.240	6.10	0.040	1.02	0.500	12.70	0.389	9.88	0.336	8.53	7.90	35.14	71.05	12.45
C0240-040-0560-X	0.240	6.10	0.040	1.02	0.560	14.22	0.433	11.00	0.366	9.30	7.90	35.14	62.23	10.89
C0240-040-0620-X	0.240	6.10	0.040	1.02	0.620	15.75	0.477	12.12	0.397	10.08	7.90	35.14	55.31	9.68
C0240-040-0690-X	0.240	6.10	0.040	1.02	0.690	17.53	0.528	13.42	0.433	11.00	7.90	35.14	48.90	8.56
C0240-040-0750-X	0.240	6.10	0.040	1.02	0.750	19.05	0.573	14.55	0.464	11.79	7.90	35.14	44.57	7.81
C0240-040-0810-X	0.240	6.10	0.040	1.02	0.810	20.57	0.617	15.67	0.495	12.57	7.90	35.14	40.90	7.16
C0240-040-0880-X	0.240	6.10	0.040	1.02	0.880	22.35	0.668	16.98	0.531	13.49	7.90	35.14	37.32	6.53
C0240-040-0940-X	0.240	6.10	0.040	1.02	0.940	23.88	0.713	18.10	0.562	14.27	7.90	35.14	34.74	6.08
C0240-040-1000-X	0.240	6.10	0.040	1.02	1.000	25.40	0.757	19.22	0.592	15.04	7.90	35.14	32.49	5.69
C0240-040-1120-X	0.240	6.10	0.040	1.02	1.120	28.45	0.845	21.47	0.654	16.61	7.90	35.14	28.74	5.03
C0240-040-1250-X	0.240	6.10	0.040	1.02	1.250	31.75	0.940	23.88	0.721	18.31	7.90	35.14	25.49	4.47
C0240-040-1380-X	0.240	6.10	0.040	1.02	1.380	35.05	1.036	26.32	0.788	20.02	7.90	35.14	22.99	4.03
C0240-040-1500-X	0.240	6.10	0.040	1.02	1.500	38.10	1.124	28.54	0.849	21.56	7.90	35.14	20.99	3.68
C0240-040-1750-X	0.240	6.10	0.040	1.02	1.750	44.45	1.309	33.25	0.977	24.82	7.90	35.14	17.91	3.13
C0240-040-2000-X	0.240	6.10	0.040	1.02	2.000	50.80	1.493	37.92	1.106	28.09	7.90	35.14	15.58	2.73
C0240-040-2250-X	0.240	6.10	0.040	1.02	2.250	57.15	1.675	42.55	1.417	35.99	7.90	35.14	13.74	2.40
C0240-040-2500-X	0.240	6.10	0.040	1.02	2.500	63.50	1.859	47.23	1.363	34.62	7.90	35.14	12.33	2.15

FOR INFORMATION ON ALTERNATIVE FINISHES, SEE PAGE 311

Part Numbers with an "*" are squared and not ground.

316 STAINLESS STEEL

Catalog #	Outside Diameter (OD)		Wire Diameter (d)		Free Length (L) Approx		Load Length (L_1)		Solid Height (Sh) Approx		Load (P) at L_1		Spring Rate (R)	
	in	mm	in	mm	in	mm	in	mm	in	mm	lb	N	lb/in	N/mm
C0240-042-0380-X	0.240	6.10	0.042	1.07	0.380	9.65	0.309	7.86	0.272	6.91	8.89	39.54	125.78	22.03
C0240-042-0440-X	0.240	6.10	0.042	1.07	0.440	11.18	0.353	8.97	0.310	7.87	8.89	39.54	102.46	17.95
C0240-042-0500-X	0.240	6.10	0.042	1.07	0.500	12.70	0.399	10.14	0.343	8.71	8.89	39.54	88.30	15.46
C0240-042-0560-X	0.240	6.10	0.042	1.07	0.560	14.22	0.446	11.34	0.373	9.47	8.89	39.54	78.30	13.71
C0240-042-0620-X	0.240	6.10	0.042	1.07	0.620	15.75	0.494	12.56	0.401	10.19	8.89	39.54	70.81	12.40
C0240-042-0690-X	0.240	6.10	0.042	1.07	0.690	17.53	0.548	13.91	0.441	11.20	8.89	39.54	62.48	10.95
C0240-042-0750-X	0.240	6.10	0.042	1.07	0.750	19.05	0.583	14.81	0.499	12.67	8.89	39.54	53.31	9.33
C0240-042-0810-X	0.240	6.10	0.042	1.07	0.810	20.57	0.632	16.06	0.525	13.34	8.89	39.54	49.98	8.76
C0240-042-0880-X	0.240	6.10	0.042	1.07	0.880	22.35	0.689	17.51	0.556	14.12	8.89	39.54	46.65	8.18
C0240-042-0940-X	0.240	6.10	0.042	1.07	0.940	23.88	0.731	18.56	0.600	15.24	8.89	39.54	42.48	7.44
C0240-042-1000-X	0.240	6.10	0.042	1.07	1.000	25.40	0.778	19.75	0.631	16.03	8.89	39.54	39.98	7.01
C0240-042-1120-X	0.240	6.10	0.042	1.07	1.120	28.45	0.869	22.07	0.699	17.75	8.89	39.54	35.40	6.20
C0240-042-1250-X	0.240	6.10	0.042	1.07	1.250	31.75	0.965	24.52	0.778	19.76	8.89	39.54	31.24	5.46
C0240-042-1380-X	0.240	6.10	0.042	1.07	1.380	35.05	1.066	27.08	0.847	21.51	8.89	39.54	28.32	4.96
C0240-042-1500-X	0.240	6.10	0.042	1.07	1.500	38.10	1.150	29.21	0.933	23.70	8.89	39.54	25.41	4.45
C0240-042-1750-X	0.240	6.10	0.042	1.07	1.750	44.45	1.347	34.22	1.040	26.42	8.89	39.54	22.07	3.87
C0240-042-2000-X	0.240	6.10	0.042	1.07	2.000	50.80	1.536	39.01	1.177	29.90	8.89	39.54	19.16	3.36
C0240-042-2250-X	0.240	6.10	0.042	1.07	2.250	57.15	1.727	43.86	1.314	33.38	8.89	39.54	16.99	2.98
C0240-042-2500-X	0.240	6.10	0.042	1.07	2.500	63.50	1.917	48.68	1.452	36.88	8.89	39.54	15.24	2.66
C0240-045-0440-X	0.240	6.10	0.045	1.14	0.440	11.18	0.366	9.29	0.326	8.28	10.82	48.13	145.69	25.52
C0240-045-0500-X	0.240	6.10	0.045	1.14	0.500	12.70	0.413	10.49	0.361	9.17	10.82	48.13	124.37	21.79
C0240-045-0560-X	0.240	6.10	0.045	1.14	0.560	14.22	0.460	11.69	0.396	10.06	10.82	48.13	108.46	19.00
C0240-045-0620-X	0.240	6.10	0.045	1.14	0.620	15.75	0.507	12.89	0.436	11.07	10.82	48.13	96.21	16.85
C0240-045-0690-X	0.240	6.10	0.045	1.14	0.690	17.53	0.563	14.29	0.477	12.12	10.82	48.13	84.97	14.89
C0240-045-0750-X	0.240	6.10	0.045	1.14	0.750	19.05	0.610	15.49	0.516	13.11	10.82	48.13	77.22	13.52
C0240-045-0810-X	0.240	6.10	0.045	1.14	0.810	20.57	0.657	16.69	0.551	14.00	10.82	48.13	70.81	12.40
C0240-045-0880-X	0.240	6.10	0.045	1.14	0.880	22.35	0.712	18.09	0.594	15.09	10.82	48.13	64.56	11.31
C0240-045-1000-X	0.240	6.10	0.045	1.14	1.000	25.40	0.807	20.50	0.667	16.94	10.82	48.13	56.06	9.82
C0240-045-1250-X	0.240	6.10	0.045	1.14	1.250	31.75	1.004	25.50	0.813	20.65	10.82	48.13	43.98	7.71
C0240-045-1500-X	0.240	6.10	0.045	1.14	1.500	38.10	1.201	30.50	0.959	24.36	10.82	48.13	36.15	6.34
C0240-045-1750-X	0.240	6.10	0.045	1.14	1.750	44.45	1.398	35.51	1.105	28.07	10.82	48.13	30.74	5.38
C0240-045-2000-X	0.240	6.10	0.045	1.14	2.000	50.80	1.594	40.49	1.251	31.78	10.82	48.13	26.66	4.68
C0240-045-2250-X	0.240	6.10	0.045	1.14	2.250	57.15	1.791	45.49	1.397	35.48	10.82	48.13	23.57	4.13
C0240-045-2500-X	0.240	6.10	0.045	1.14	2.500	63.50	1.988	50.51	1.543	39.19	10.82	48.13	21.16	3.71
D21300X*	0.268	6.80	0.020	0.50	0.531	13.50	0.307	7.81	0.128	3.25	15.44	3.47	3.48	0.61
D21310X*	0.268	6.80	0.020	0.50	0.787	20.00	0.428	10.87	0.167	4.25	15.44	3.47	2.17	0.38
D21320X*	0.268	6.80	0.020	0.50	1.181	30.00	0.635	16.12	0.226	5.75	15.44	3.47	1.43	0.25
D21330X*	0.268	6.80	0.020	0.50	1.732	44.00	0.929	23.59	0.305	7.75	15.44	3.47	0.97	0.17
D21340X*	0.268	6.80	0.020	0.50	2.559	65.00	1.420	36.08	0.423	10.75	15.44	3.47	0.69	0.12
D21500X*	0.273	6.93	0.025	0.63	0.453	11.50	0.280	7.11	0.161	4.10	29.71	6.68	8.68	1.52
D21510X*	0.273	6.93	0.025	0.63	0.669	17.00	0.398	10.11	0.211	5.36	29.71	6.68	5.54	0.97
D21520X*	0.273	6.93	0.025	0.63	1.004	25.50	0.587	14.90	0.285	7.25	29.71	6.68	3.60	0.63
D21530X*	0.273	6.93	0.025	0.63	1.437	36.50	0.811	20.60	0.385	9.77	29.71	6.68	2.40	0.42
D21540X*	0.273	6.93	0.025	0.63	2.126	54.00	1.187	30.14	0.533	13.55	29.71	6.68	1.60	0.28
D21700X*	0.280	7.10	0.031	0.80	0.413	10.50	0.284	7.22	0.205	5.20	57.87	13.01	22.67	3.97
D21710X*	0.280	7.10	0.031	0.80	0.610	15.50	0.407	10.34	0.268	6.80	57.87	13.01	14.39	2.52
D21720X*	0.280	7.10	0.031	0.80	0.906	23.00	0.591	15.02	0.362	9.20	57.87	13.01	9.31	1.63
D21730X*	0.280	7.10	0.031	0.80	1.299	33.00	0.838	21.28	0.488	12.40	57.87	13.01	6.34	1.11
D21740X*	0.280	7.10	0.031	0.80	1.890	48.00	1.207	30.65	0.677	17.20	57.87	13.01	4.28	0.75
D21900X	0.287	7.30	0.039	1.00	0.394	10.00	0.296	7.52	0.217	5.50	106.49	23.94	55.05	9.64
D21910X	0.287	7.30	0.039	1.00	0.571	14.50	0.418	10.61	0.295	7.50	106.49	23.94	35.17	6.16
D21920X	0.287	7.30	0.039	1.00	0.846	21.50	0.610	15.50	0.413	10.50	106.49	23.94	22.78	3.99
D21930X	0.287	7.30	0.039	1.00	1.201	30.50	0.854	21.70	0.571	14.50	106.49	23.94	15.53	2.72
D21940X	0.287	7.30	0.039	1.00	1.713	43.50	1.198	30.42	0.807	20.50	106.49	23.94	10.45	1.83
D22100X	0.297	7.55	0.049	1.25	0.472	12.00	0.402	10.21	0.271	6.88	193.05	43.40	138.07	24.18
D22110X	0.297	7.55	0.049	1.25	0.669	17.00	0.556	14.11	0.369	9.38	193.05	43.40	85.82	15.03
D22120X	0.297	7.55	0.049	1.25	0.984	25.00	0.810	20.57	0.517	13.13	193.05	43.40	55.96	9.80
D22130X	0.297	7.55	0.049	1.25	1.398	35.50	1.144	29.06	0.714	18.13	193.05	43.40	38.49	6.74
D22140X	0.297	7.55	0.049	1.25	2.028	51.50	1.647	41.83	1.009	25.63	193.05	43.40	25.64	4.49
C0300-022-0380-X	0.300	7.62	0.022	0.56	0.380	9.65	0.232	5.88	0.100	2.54	1.11	4.94	7.50	1.31
C0300-022-0440-X	0.300	7.62	0.022	0.56	0.440	11.18	0.264	6.71	0.106	2.69	1.11	4.94	6.33	1.10
C0300-022-0500-X	0.300	7.62	0.022	0.56	0.500	12.70	0.298	7.56	0.109	2.77	1.11	4.94	5.50	0.96
C0300-022-0560-X	0.300	7.62	0.022	0.56	0.560	14.22	0.334	8.47	0.115	2.92	1.11	4.94	4.91	0.86
C0300-022-0620-X	0.300	7.62	0.022	0.56	0.620	15.75	0.353	8.96	0.126	3.20	1.11	4.94	4.17	0.74

Part Numbers with an "*" are squared and not ground.

316 STAINLESS STEEL

Catalog #	Outside Diameter (OD)		Wire Diameter (d)		Free Length (L) Approx		Load Length (L_1)		Solid Height (Sh) Approx		Load (P) at L_1		Spring Rate (R)	
	in	mm	in	mm	in	mm	in	mm	in	mm	lb	N	lb/in	N/mm
C0300-022-0690-X	0.300	7.62	0.022	0.56	0.690	17.53	0.406	10.30	0.131	3.33	1.11	4.94	3.92	0.68
C0300-022-0750-X	0.300	7.62	0.022	0.56	0.750	19.05	0.424	10.77	0.142	3.61	1.11	4.94	3.42	0.60
C0300-022-0810-X	0.300	7.62	0.022	0.56	0.810	20.57	0.458	11.64	0.149	3.78	1.11	4.94	3.17	0.56
C0300-022-0880-X	0.300	7.62	0.022	0.56	0.880	22.35	0.509	12.92	0.154	3.91	1.11	4.94	3.00	0.53
C0300-022-1000-X	0.300	7.62	0.022	0.56	1.000	25.40	0.582	14.79	0.175	4.45	1.11	4.94	2.67	0.47
C0300-022-1250-X	0.300	7.62	0.022	0.56	1.250	31.75	0.715	18.17	0.204	5.18	1.11	4.94	2.08	0.37
C0300-022-1500-X	0.300	7.62	0.022	0.56	1.500	38.10	0.864	21.94	0.232	5.89	1.11	4.94	1.75	0.32
C0300-022-1750-X	0.300	7.62	0.022	0.56	1.750	44.45	1.008	25.59	0.261	6.63	1.11	4.94	1.50	0.26
C0300-022-2000-X	0.300	7.62	0.022	0.56	2.000	50.80	1.109	28.17	0.289	7.34	1.11	4.94	1.25	0.23
C0300-022-2250-X	0.300	7.62	0.022	0.56	2.250	57.15	1.295	32.91	0.308	7.82	1.11	4.94	1.17	0.21
C0300-022-2500-X	0.300	7.62	0.022	0.56	2.500	63.50	1.472	37.39	0.334	8.48	1.11	4.94	1.08	0.19
C0300-026-0440-X	0.300	7.62	0.026	0.66	0.440	11.18	0.275	6.99	0.130	3.30	1.83	8.14	11.08	1.94
C0300-026-0500-X	0.300	7.62	0.026	0.66	0.500	12.70	0.303	7.69	0.143	3.63	1.83	8.14	9.25	1.63
C0300-026-0560-X	0.300	7.62	0.026	0.66	0.560	14.22	0.347	8.82	0.148	3.76	1.83	8.14	8.58	1.51
C0300-026-0620-X	0.300	7.62	0.026	0.66	0.620	15.75	0.374	9.50	0.162	4.11	1.83	8.14	7.41	1.30
C0300-026-0690-X	0.300	7.62	0.026	0.66	0.690	17.53	0.409	10.39	0.176	4.47	1.83	8.14	6.50	1.14
C0300-026-0750-X	0.300	7.62	0.026	0.66	0.750	19.05	0.454	11.53	0.182	4.62	1.83	8.14	6.16	1.09
C0300-026-0810-X	0.300	7.62	0.026	0.66	0.810	20.57	0.483	12.27	0.194	4.93	1.83	8.14	5.58	0.98
C0300-026-0880-X	0.300	7.62	0.026	0.66	0.880	22.35	0.521	13.23	0.206	5.23	1.83	8.14	5.08	0.89
C0300-026-0940-X	0.300	7.62	0.026	0.66	0.940	23.88	0.542	13.76	0.222	5.64	1.83	8.14	4.58	0.81
C0300-026-1000-X	0.300	7.62	0.026	0.66	1.000	25.40	0.570	14.49	0.234	5.94	1.83	8.14	4.25	0.75
C0300-026-1250-X	0.300	7.62	0.026	0.66	1.250	31.75	0.740	18.81	0.272	6.91	1.83	8.14	3.58	0.63
C0300-026-1500-X	0.300	7.62	0.026	0.66	1.500	38.10	0.874	22.20	0.313	7.95	1.83	8.14	2.92	0.51
C0300-026-1750-X	0.300	7.62	0.026	0.66	1.750	44.45	1.020	25.90	0.354	8.99	1.83	8.14	2.50	0.44
C0300-026-2000-X	0.300	7.62	0.026	0.66	2.000	50.80	1.157	29.40	0.394	10.01	1.83	8.14	2.17	0.39
C0300-026-2250-X	0.300	7.62	0.026	0.66	2.250	57.15	1.374	34.89	0.416	10.57	1.83	8.14	2.08	0.37
C0300-026-2500-X	0.300	7.62	0.026	0.66	2.500	63.50	1.504	38.20	0.455	11.56	1.83	8.14	1.83	0.32
C0300-030-0440-X	0.300	7.62	0.030	0.76	0.440	11.18	0.285	7.23	0.172	4.37	2.78	12.37	17.91	3.13
C0300-030-0500-X	0.300	7.62	0.030	0.76	0.500	12.70	0.320	8.14	0.185	4.70	2.78	12.37	15.49	2.71
C0300-030-0560-X	0.300	7.62	0.030	0.76	0.560	14.22	0.356	9.05	0.198	5.03	2.78	12.37	13.66	2.40
C0300-030-0620-X	0.300	7.62	0.030	0.76	0.620	15.75	0.391	9.93	0.212	5.38	2.78	12.37	12.16	2.14
C0300-030-0690-X	0.300	7.62	0.030	0.76	0.690	17.53	0.433	11.00	0.227	5.77	2.78	12.37	10.83	1.89
C0300-030-0750-X	0.300	7.62	0.030	0.76	0.750	19.05	0.469	11.92	0.240	6.10	2.78	12.37	9.91	1.73
C0300-030-0810-X	0.300	7.62	0.030	0.76	0.810	20.57	0.503	12.79	0.253	6.43	2.78	12.37	9.08	1.59
C0300-030-0880-X	0.300	7.62	0.030	0.76	0.880	22.35	0.546	13.86	0.268	6.81	2.78	12.37	8.33	1.45
C0300-030-0940-X	0.300	7.62	0.030	0.76	0.940	23.88	0.581	14.75	0.281	7.14	2.78	12.37	7.75	1.37
C0300-030-1000-X	0.300	7.62	0.030	0.76	1.000	25.40	0.616	15.64	0.294	7.47	2.78	12.37	7.25	1.28
C0300-030-1250-X	0.300	7.62	0.030	0.76	1.250	31.75	0.766	19.45	0.348	8.84	2.78	12.37	5.75	1.02
C0300-030-1500-X	0.300	7.62	0.030	0.76	1.500	38.10	0.914	23.21	0.402	10.21	2.78	12.37	4.75	0.84
C0300-030-1750-X	0.300	7.62	0.030	0.76	1.750	44.45	1.054	26.77	0.457	11.61	2.78	12.37	4.00	0.70
C0300-030-2000-X	0.300	7.62	0.030	0.76	2.000	50.80	1.204	30.59	0.511	12.98	2.78	12.37	3.50	0.61
C0300-030-2250-X	0.300	7.62	0.030	0.76	2.250	57.15	1.347	34.21	0.565	14.35	2.78	12.37	3.08	0.54
C0300-030-2500-X	0.300	7.62	0.030	0.76	2.500	63.50	1.517	38.53	0.619	15.72	2.78	12.37	2.83	0.49
C0300-032-0440-X	0.300	7.62	0.032	0.81	0.440	11.18	0.292	7.42	0.175	4.45	3.37	14.99	22.74	3.98
C0300-032-0500-X	0.300	7.62	0.032	0.81	0.500	12.70	0.329	8.35	0.190	4.83	3.37	14.99	19.66	3.45
C0300-032-0560-X	0.300	7.62	0.032	0.81	0.560	14.22	0.362	9.19	0.208	5.28	3.37	14.99	16.99	2.98
C0300-032-0620-X	0.300	7.62	0.032	0.81	0.620	15.75	0.398	10.11	0.223	5.66	3.37	14.99	15.16	2.66
C0300-032-0690-X	0.300	7.62	0.032	0.81	0.690	17.53	0.442	11.23	0.240	6.10	3.37	14.99	13.58	2.38
C0300-032-0750-X	0.300	7.62	0.032	0.81	0.750	19.05	0.479	12.16	0.255	6.48	3.37	14.99	12.41	2.17
C0300-032-0810-X	0.300	7.62	0.032	0.81	0.810	20.57	0.513	13.03	0.272	6.91	3.37	14.99	11.33	1.98
C0300-032-0880-X	0.300	7.62	0.032	0.81	0.880	22.35	0.559	14.21	0.287	7.29	3.37	14.99	10.50	1.84
C0300-032-0940-X	0.300	7.62	0.032	0.81	0.940	23.88	0.582	14.79	0.311	7.90	3.37	14.99	9.41	1.65
C0300-032-1000-X	0.300	7.62	0.032	0.81	1.000	25.40	0.619	15.72	0.326	8.28	3.37	14.99	8.83	1.54
C0300-032-1250-X	0.300	7.62	0.032	0.81	1.250	31.75	0.780	19.82	0.388	9.86	3.37	14.99	7.16	1.26
C0300-032-1500-X	0.300	7.62	0.032	0.81	1.500	38.10	0.931	23.64	0.450	11.43	3.37	14.99	5.91	1.03
C0300-032-1750-X	0.300	7.62	0.032	0.81	1.750	44.45	1.077	27.34	0.511	12.98	3.37	14.99	5.00	0.88
C0300-032-2000-X	0.300	7.62	0.032	0.81	2.000	50.80	1.238	31.44	0.573	14.55	3.37	14.99	4.41	0.77
C0300-032-2250-X	0.300	7.62	0.032	0.81	2.250	57.15	1.425	36.20	0.608	15.44	3.37	14.99	4.08	0.72
C0300-032-2500-X	0.300	7.62	0.032	0.81	2.500	63.50	1.582	40.17	0.656	16.66	3.37	14.99	3.67	0.65
C0300-035-0380-X	0.300	7.62	0.035	0.89	0.380	9.65	0.266	6.75	0.193	4.90	4.38	19.48	38.32	6.71
C0300-035-0440-X	0.300	7.62	0.035	0.89	0.440	11.18	0.303	7.71	0.210	5.33	4.38	19.48	32.07	5.62
C0300-035-0500-X	0.300	7.62	0.035	0.89	0.500	12.70	0.342	8.68	0.227	5.77	4.38	19.48	27.66	4.85
C0300-035-0560-X	0.300	7.62	0.035	0.89	0.560	14.22	0.379	9.64	0.244	6.20	4.38	19.48	24.24	4.24
C0300-035-0620-X	0.300	7.62	0.035	0.89	0.620	15.75	0.417	10.59	0.262	6.65	4.38	19.48	21.57	3.78

FOR INFORMATION ON ALTERNATIVE FINISHES, SEE PAGE 311

Part Numbers with an "*" are squared and not ground.

316 STAINLESS STEEL

Catalog #	Outside Diameter (OD)		Wire Diameter (d)		Free Length (L) Approx		Load Length (L_1)		Solid Height (Sh) Approx		Load (P) at L_1		Spring Rate (R)	
	in	mm	in	mm	in	mm	in	mm	in	mm	lb	N	lb/in	N/mm
C0300-035-0690-X	0.300	7.62	0.035	0.89	0.690	17.53	0.461	11.72	0.281	7.14	4.38	19.48	19.16	3.36
C0300-035-0750-X	0.300	7.62	0.035	0.89	0.750	19.05	0.500	12.69	0.298	7.57	4.38	19.48	17.49	3.06
C0300-035-0810-X	0.300	7.62	0.035	0.89	0.810	20.57	0.538	13.66	0.316	8.03	4.38	19.48	16.08	2.82
C0300-035-0880-X	0.300	7.62	0.035	0.89	0.880	22.35	0.581	14.77	0.335	8.51	4.38	19.48	14.66	2.57
C0300-035-0940-X	0.300	7.62	0.035	0.89	0.940	23.88	0.619	15.73	0.353	8.97	4.38	19.48	13.66	2.40
C0300-035-1000-X	0.300	7.62	0.035	0.89	1.000	25.40	0.656	16.67	0.370	9.40	4.38	19.48	12.74	2.22
C0300-035-1120-X	0.300	7.62	0.035	0.89	1.120	28.45	0.733	18.63	0.404	10.26	4.38	19.48	11.33	1.98
C0300-035-1250-X	0.300	7.62	0.035	0.89	1.250	31.75	0.816	20.72	0.441	11.20	4.38	19.48	10.08	1.77
C0300-035-1380-X	0.300	7.62	0.035	0.89	1.380	35.05	0.898	22.80	0.478	12.14	4.38	19.48	9.08	1.59
C0300-035-1500-X	0.300	7.62	0.035	0.89	1.500	38.10	0.974	24.75	0.512	13.00	4.38	19.48	8.33	1.45
C0300-035-1750-X	0.300	7.62	0.035	0.89	1.750	44.45	1.132	28.74	0.583	14.81	4.38	19.48	7.08	1.24
C0300-035-2000-X	0.300	7.62	0.035	0.89	2.000	50.80	1.290	32.76	0.654	16.61	4.38	19.48	6.16	1.09
C0300-035-2250-X	0.300	7.62	0.035	0.89	2.250	57.15	1.441	36.61	0.725	18.42	4.38	19.48	5.41	0.95
C0300-035-2500-X	0.300	7.62	0.035	0.89	2.500	63.50	1.609	40.87	0.796	20.22	4.38	19.48	4.91	0.86
C0300-038-0380-X	0.300	7.62	0.038	0.97	0.380	9.65	0.276	7.02	0.197	5.00	5.57	24.78	53.73	9.40
C0300-038-0440-X	0.300	7.62	0.038	0.97	0.440	11.18	0.315	8.00	0.218	5.54	5.57	24.78	44.57	7.81
C0300-038-0500-X	0.300	7.62	0.038	0.97	0.500	12.70	0.356	9.04	0.237	6.02	5.57	24.78	38.65	6.78
C0300-038-0560-X	0.300	7.62	0.038	0.97	0.560	14.22	0.388	9.85	0.265	6.73	5.57	24.78	32.32	5.66
C0300-038-0620-X	0.300	7.62	0.038	0.97	0.620	15.75	0.428	10.88	0.284	7.21	5.57	24.78	29.07	5.10
C0300-038-0690-X	0.300	7.62	0.038	0.97	0.690	17.53	0.469	11.92	0.313	7.95	5.57	24.78	25.24	4.41
C0300-038-0750-X	0.300	7.62	0.038	0.97	0.750	19.05	0.510	12.96	0.331	8.41	5.57	24.78	23.24	4.06
C0300-038-0810-X	0.300	7.62	0.038	0.97	0.810	20.57	0.551	13.99	0.351	8.92	5.57	24.78	21.49	3.77
C0300-038-0880-X	0.300	7.62	0.038	0.97	0.880	22.35	0.592	15.03	0.379	9.63	5.57	24.78	19.33	3.38
C0300-038-0940-X	0.300	7.62	0.038	0.97	0.940	23.88	0.633	16.09	0.398	10.11	5.57	24.78	18.16	3.19
C0300-038-1000-X	0.300	7.62	0.038	0.97	1.000	25.40	0.674	17.12	0.417	10.59	5.57	24.78	17.08	2.99
C0300-038-1120-X	0.300	7.62	0.038	0.97	1.120	28.45	0.755	19.17	0.456	11.58	5.57	24.78	15.24	2.66
C0300-038-1250-X	0.300	7.62	0.038	0.97	1.250	31.75	0.847	21.52	0.493	12.52	5.57	24.78	13.83	2.42
C0300-038-1380-X	0.300	7.62	0.038	0.97	1.380	35.05	0.937	23.80	0.532	13.51	5.57	24.78	12.58	2.21
C0300-038-1500-X	0.300	7.62	0.038	0.97	1.500	38.10	1.019	25.88	0.570	14.48	5.57	24.78	11.58	2.03
C0300-038-1750-X	0.300	7.62	0.038	0.97	1.750	44.45	1.153	29.29	0.680	17.27	5.57	24.78	9.33	1.63
C0300-038-2000-X	0.300	7.62	0.038	0.97	2.000	50.80	1.311	33.29	0.765	19.43	5.57	24.78	8.08	1.42
C0300-038-2250-X	0.300	7.62	0.038	0.97	2.250	57.15	1.507	38.28	0.806	20.47	5.57	24.78	7.50	1.31
C0300-038-2500-X	0.300	7.62	0.038	0.97	2.500	63.50	1.685	42.79	0.874	22.20	5.57	24.78	6.83	1.19
C0300-040-0380-X	0.300	7.62	0.040	1.02	0.380	9.65	0.277	7.04	0.231	5.87	6.47	28.78	62.89	11.02
C0300-040-0440-X	0.300	7.62	0.040	1.02	0.440	11.18	0.317	8.04	0.253	6.43	6.47	28.78	52.40	9.18
C0300-040-0500-X	0.300	7.62	0.040	1.02	0.500	12.70	0.356	9.04	0.275	6.99	6.47	28.78	44.90	7.86
C0300-040-0560-X	0.300	7.62	0.040	1.02	0.560	14.22	0.395	10.04	0.297	7.54	6.47	28.78	39.32	6.88
C0300-040-0620-X	0.300	7.62	0.040	1.02	0.620	15.75	0.435	11.04	0.320	8.13	6.47	28.78	34.90	6.11
C0300-040-0690-X	0.300	7.62	0.040	1.02	0.690	17.53	0.481	12.21	0.346	8.79	6.47	28.78	30.90	5.41
C0300-040-0750-X	0.300	7.62	0.040	1.02	0.750	19.05	0.520	13.21	0.368	9.35	6.47	28.78	28.16	4.94
C0300-040-0810-X	0.300	7.62	0.040	1.02	0.810	20.57	0.559	14.21	0.390	9.91	6.47	28.78	25.82	4.52
C0300-040-0880-X	0.300	7.62	0.040	1.02	0.880	22.35	0.606	15.38	0.416	10.57	6.47	28.78	23.57	4.13
C0300-040-0940-X	0.300	7.62	0.040	1.02	0.940	23.88	0.645	16.38	0.438	11.13	6.47	28.78	21.91	3.84
C0300-040-1000-X	0.300	7.62	0.040	1.02	1.000	25.40	0.684	17.38	0.460	11.68	6.47	28.78	20.49	3.59
C0300-040-1120-X	0.300	7.62	0.040	1.02	1.120	28.45	0.764	19.40	0.505	12.83	6.47	28.78	18.16	3.19
C0300-040-1250-X	0.300	7.62	0.040	1.02	1.250	31.75	0.850	21.58	0.553	14.05	6.47	28.78	16.16	2.84
C0300-040-1380-X	0.300	7.62	0.040	1.02	1.380	35.05	0.934	23.72	0.601	15.27	6.47	28.78	14.49	2.54
C0300-040-1500-X	0.300	7.62	0.040	1.02	1.500	38.10	1.015	25.77	0.645	16.38	6.47	28.78	13.33	2.33
C0300-040-1750-X	0.300	7.62	0.040	1.02	1.750	44.45	1.179	29.95	0.737	18.72	6.47	28.78	11.33	1.98
C0300-040-2000-X	0.300	7.62	0.040	1.02	2.000	50.80	1.342	34.08	0.830	21.08	6.47	28.78	9.83	1.72
C0300-040-2250-X	0.300	7.62	0.040	1.02	2.250	57.15	1.503	38.18	0.922	23.42	6.47	28.78	8.66	1.52
C0300-040-2500-X	0.300	7.62	0.040	1.02	2.500	63.50	1.674	42.52	1.015	25.78	6.47	28.78	7.83	1.37
C0300-042-0380-X	0.300	7.62	0.042	1.07	0.380	9.65	0.299	7.60	0.210	5.33	7.30	32.47	90.21	15.80
C0300-042-0440-X	0.300	7.62	0.042	1.07	0.440	11.18	0.344	8.73	0.230	5.84	7.30	32.47	75.64	13.24
C0300-042-0500-X	0.300	7.62	0.042	1.07	0.500	12.70	0.376	9.55	0.266	6.76	7.30	32.47	58.89	10.31
C0300-042-0560-X	0.300	7.62	0.042	1.07	0.560	14.22	0.414	10.53	0.294	7.47	7.30	32.47	50.15	8.79
C0300-042-0620-X	0.300	7.62	0.042	1.07	0.620	15.75	0.450	11.44	0.325	8.26	7.30	32.47	42.98	7.53
C0300-042-0690-X	0.300	7.62	0.042	1.07	0.690	17.53	0.496	12.59	0.357	9.07	7.30	32.47	37.57	6.58
C0300-042-0750-X	0.300	7.62	0.042	1.07	0.750	19.05	0.540	13.71	0.378	9.60	7.30	32.47	34.74	6.08
C0300-042-0810-X	0.300	7.62	0.042	1.07	0.810	20.57	0.576	14.62	0.409	10.39	7.30	32.47	31.15	5.46
C0300-042-0880-X	0.300	7.62	0.042	1.07	0.880	22.35	0.621	15.77	0.442	11.23	7.30	32.47	28.16	4.94
C0300-042-0940-X	0.300	7.62	0.042	1.07	0.940	23.88	0.665	16.90	0.462	11.73	7.30	32.47	26.57	4.66
C0300-042-1000-X	0.300	7.62	0.042	1.07	1.000	25.40	0.709	18.01	0.484	12.29	7.30	32.47	25.07	4.40
C0300-042-1120-X	0.300	7.62	0.042	1.07	1.120	28.45	0.797	20.24	0.526	13.36	7.30	32.47	22.57	3.96

Part Numbers with an "*" are squared and not ground.

316 STAINLESS STEEL

Catalog #	Outside Diameter (OD)		Wire Diameter (d)		Free Length (L) Approx		Load Length (L_1)		Solid Height (Sh) Approx		Load (P) at L_1		Spring Rate (R)	
	in	mm	in	mm	in	mm	in	mm	in	mm	lb	N	lb/in	N/mm
C0300-042-1250-X	0.300	7.62	0.042	1.07	1.250	31.75	0.887	22.52	0.578	14.68	7.30	32.47	20.08	3.52
C0300-042-1380-X	0.300	7.62	0.042	1.07	1.380	35.05	0.976	24.80	0.630	16.00	7.30	32.47	18.08	3.17
C0300-042-1500-X	0.300	7.62	0.042	1.07	1.500	38.10	1.055	26.81	0.684	17.37	7.30	32.47	16.41	2.87
C0300-042-1750-X	0.300	7.62	0.042	1.07	1.750	44.45	1.216	30.88	0.794	20.17	7.30	32.47	13.66	2.40
C0300-042-2000-X	0.300	7.62	0.042	1.07	2.000	50.80	1.383	35.13	0.894	22.71	7.30	32.47	11.83	2.07
C0300-042-2250-X	0.300	7.62	0.042	1.07	2.250	57.15	1.555	39.49	0.995	25.27	7.30	32.47	10.50	1.84
C0300-042-2500-X	0.300	7.62	0.042	1.07	2.500	63.50	1.758	44.64	1.050	26.67	7.30	32.47	9.83	1.72
C0300-045-0380-X	0.300	7.62	0.045	1.14	0.380	9.65	0.293	7.45	0.247	6.27	8.91	39.63	102.88	18.02
C0300-045-0440-X	0.300	7.62	0.045	1.14	0.440	11.18	0.339	8.61	0.269	6.83	8.91	39.63	88.38	15.48
C0300-045-0500-X	0.300	7.62	0.045	1.14	0.500	12.70	0.384	9.76	0.292	7.42	8.91	39.63	77.14	13.50
C0300-045-0560-X	0.300	7.62	0.045	1.14	0.560	14.22	0.423	10.75	0.325	8.26	8.91	39.63	65.22	11.42
C0300-045-0620-X	0.300	7.62	0.045	1.14	0.620	15.75	0.462	11.73	0.359	9.12	8.91	39.63	56.31	9.86
C0300-045-0690-X	0.300	7.62	0.045	1.14	0.690	17.53	0.517	13.14	0.381	9.68	8.91	39.63	51.65	9.05
C0300-045-0750-X	0.300	7.62	0.045	1.14	0.750	19.05	0.555	14.11	0.415	10.54	8.91	39.63	45.82	8.02
C0300-045-0810-X	0.300	7.62	0.045	1.14	0.810	20.57	0.601	15.28	0.437	11.10	8.91	39.63	42.73	7.48
C0300-045-0880-X	0.300	7.62	0.045	1.14	0.880	22.35	0.649	16.49	0.472	11.99	8.91	39.63	38.65	6.78
C0300-045-0940-X	0.300	7.62	0.045	1.14	0.940	23.88	0.688	17.47	0.506	12.85	8.91	39.63	35.32	6.18
C0300-045-1000-X	0.300	7.62	0.045	1.14	1.000	25.40	0.734	18.64	0.527	13.39	8.91	39.63	33.49	5.87
C0300-045-1120-X	0.300	7.62	0.045	1.14	1.120	28.45	0.824	20.94	0.573	14.55	8.91	39.63	30.15	5.29
C0300-045-1250-X	0.300	7.62	0.045	1.14	1.250	31.75	0.919	23.33	0.629	15.98	8.91	39.63	26.91	4.71
C0300-045-1380-X	0.300	7.62	0.045	1.14	1.380	35.05	1.012	25.71	0.686	17.42	8.91	39.63	24.24	4.24
C0300-045-1500-X	0.300	7.62	0.045	1.14	1.500	38.10	1.096	27.84	0.742	18.85	8.91	39.63	22.07	3.87
C0300-045-1750-X	0.300	7.62	0.045	1.14	1.750	44.45	1.252	31.81	0.878	22.30	8.91	39.63	17.91	3.13
C0300-045-2000-X	0.300	7.62	0.045	1.14	2.000	50.80	1.428	36.26	0.990	25.15	8.91	39.63	15.58	2.73
C0300-045-2250-X	0.300	7.62	0.045	1.14	2.250	57.15	1.605	40.78	1.102	27.99	8.91	39.63	13.83	2.42
C0300-045-2500-X	0.300	7.62	0.045	1.14	2.500	63.50	1.814	46.08	1.170	29.72	8.91	39.63	12.99	2.28
C0300-047-0380-X	0.300	7.62	0.047	1.19	0.380	9.65	0.304	7.71	0.250	6.35	10.11	44.97	132.45	23.20
C0300-047-0440-X	0.300	7.62	0.047	1.19	0.440	11.18	0.348	8.83	0.279	7.09	10.11	44.97	109.46	19.18
C0300-047-0500-X	0.300	7.62	0.047	1.19	0.500	12.70	0.392	9.95	0.311	7.90	10.11	44.97	93.30	16.34
C0300-047-0560-X	0.300	7.62	0.047	1.19	0.560	14.22	0.436	11.07	0.343	8.71	10.11	44.97	81.30	14.24
C0300-047-0620-X	0.300	7.62	0.047	1.19	0.620	15.75	0.480	12.18	0.374	9.50	10.11	44.97	72.05	12.63
C0300-047-0690-X	0.300	7.62	0.047	1.19	0.690	17.53	0.531	13.49	0.408	10.36	10.11	44.97	63.56	11.14
C0300-047-0750-X	0.300	7.62	0.047	1.19	0.750	19.05	0.575	14.60	0.435	11.05	10.11	44.97	57.73	10.10
C0300-047-0810-X	0.300	7.62	0.047	1.19	0.810	20.57	0.619	15.72	0.461	11.71	10.11	44.97	52.90	9.26
C0300-047-0880-X	0.300	7.62	0.047	1.19	0.880	22.35	0.670	17.03	0.493	12.52	10.11	44.97	48.23	8.44
C0300-047-0940-X	0.300	7.62	0.047	1.19	0.940	23.88	0.714	18.15	0.520	13.21	10.11	44.97	44.82	7.85
C0300-047-1000-X	0.300	7.62	0.047	1.19	1.000	25.40	0.758	19.26	0.547	13.89	10.11	44.97	41.82	7.32
C0300-047-1120-X	0.300	7.62	0.047	1.19	1.120	28.45	0.846	21.49	0.600	15.24	10.11	44.97	36.90	6.46
C0300-047-1250-X	0.300	7.62	0.047	1.19	1.250	31.75	0.941	23.91	0.658	16.71	10.11	44.97	32.74	5.73
C0300-047-1380-X	0.300	7.62	0.047	1.19	1.380	35.05	1.037	26.35	0.717	18.21	10.11	44.97	29.49	5.17
C0300-047-1500-X	0.300	7.62	0.047	1.19	1.500	38.10	1.124	28.56	0.770	19.56	10.11	44.97	26.91	4.71
C0300-047-1750-X	0.300	7.62	0.047	1.19	1.750	44.45	1.309	33.24	0.882	22.40	10.11	44.97	22.91	4.01
C0300-047-2000-X	0.300	7.62	0.047	1.19	2.000	50.80	1.492	37.90	0.994	25.25	10.11	44.97	19.91	3.49
C0300-047-2250-X	0.300	7.62	0.047	1.19	2.250	57.15	1.675	42.54	1.106	28.09	10.11	44.97	17.58	3.08
C0300-047-2500-X	0.300	7.62	0.047	1.19	2.500	63.50	1.858	47.19	1.218	30.94	10.11	44.97	15.74	2.75
C0300-047-2750-X	0.300	7.62	0.047	1.19	2.750	69.85	2.040	51.83	1.330	33.78	10.11	44.97	14.24	2.49
C0300-047-3000-X	0.300	7.62	0.047	1.19	3.000	76.20	2.227	56.57	1.442	36.63	10.11	44.97	13.08	2.29
C0300-049-0380-X	0.300	7.62	0.049	1.24	0.380	9.65	0.309	7.86	0.263	6.68	11.15	49.60	157.85	27.65
C0300-049-0440-X	0.300	7.62	0.049	1.24	0.440	11.18	0.354	9.00	0.294	7.47	11.15	49.60	130.20	22.80
C0300-049-0500-X	0.300	7.62	0.049	1.24	0.500	12.70	0.399	10.14	0.328	8.33	11.15	49.60	110.79	19.40
C0300-049-0560-X	0.300	7.62	0.049	1.24	0.560	14.22	0.444	11.29	0.362	9.19	11.15	49.60	96.38	16.88
C0300-049-0620-X	0.300	7.62	0.049	1.24	0.620	15.75	0.489	12.43	0.395	10.03	11.15	49.60	85.30	14.94
C0300-049-0690-X	0.300	7.62	0.049	1.24	0.690	17.53	0.542	13.76	0.431	10.95	11.15	49.60	75.22	13.17
C0300-049-0750-X	0.300	7.62	0.049	1.24	0.750	19.05	0.587	14.90	0.460	11.68	11.15	49.60	68.31	11.96
C0300-049-0810-X	0.300	7.62	0.049	1.24	0.810	20.57	0.632	16.05	0.489	12.42	11.15	49.60	62.56	10.96
C0300-049-0880-X	0.300	7.62	0.049	1.24	0.880	22.35	0.684	17.38	0.523	13.28	11.15	49.60	56.98	9.98
C0300-049-0940-X	0.300	7.62	0.049	1.24	0.940	23.88	0.729	18.52	0.551	14.00	11.15	49.60	52.90	9.26
C0300-049-1000-X	0.300	7.62	0.049	1.24	1.000	25.40	0.774	19.67	0.580	14.73	11.15	49.60	49.40	8.65
C0300-049-1120-X	0.300	7.62	0.049	1.24	1.120	28.45	0.864	21.95	0.638	16.21	11.15	49.60	43.57	7.64
C0300-049-1250-X	0.300	7.62	0.049	1.24	1.250	31.75	0.962	24.42	0.700	17.78	11.15	49.60	38.65	6.78
C0300-049-1380-X	0.300	7.62	0.049	1.24	1.380	35.05	1.059	26.90	0.763	19.38	11.15	49.60	34.74	6.08
C0300-049-1500-X	0.300	7.62	0.049	1.24	1.500	38.10	1.149	29.18	0.821	20.85	11.15	49.60	31.74	5.55
C0300-049-1750-X	0.300	7.62	0.049	1.24	1.750	44.45	1.337	33.96	0.941	23.90	11.15	49.60	26.99	4.73
C0300-049-2000-X	0.300	7.62	0.049	1.24	2.000	50.80	1.524	38.70	1.061	26.95	11.15	49.60	23.41	4.10

FOR INFORMATION ON ALTERNATIVE FINISHES, SEE PAGE 311

Part Numbers with an "*" are squared and not ground.

316 STAINLESS STEEL

Catalog #	Outside Diameter (OD)		Wire Diameter (d)		Free Length (L) Approx		Load Length (L_1)		Solid Height (Sh) Approx		Load (P) at L_1		Spring Rate (R)	
	in	mm	in	mm	in	mm	in	mm	in	mm	lb	N	lb/in	N/mm
C0300-049-2250-X	0.300	7.62	0.049	1.24	2.250	57.15	1.710	43.44	1.181	30.00	11.15	49.60	20.66	3.63
C0300-049-2500-X	0.300	7.62	0.049	1.24	2.500	63.50	1.900	48.25	1.301	33.05	11.15	49.60	18.58	3.26
C0300-049-2750-X	0.300	7.62	0.049	1.24	2.750	69.85	2.087	53.02	1.421	36.09	11.15	49.60	16.83	2.94
C0300-049-3000-X	0.300	7.62	0.049	1.24	3.000	76.20	2.273	57.72	1.541	39.14	11.15	49.60	15.33	2.68
C0300-051-0380-X	0.300	7.62	0.051	1.30	0.380	9.65	0.314	7.97	0.274	6.96	12.51	55.65	188.76	33.06
C0300-051-0440-X	0.300	7.62	0.051	1.30	0.440	11.18	0.359	9.13	0.308	7.82	12.51	55.65	155.27	27.20
C0300-051-0500-X	0.300	7.62	0.051	1.30	0.500	12.70	0.405	10.29	0.343	8.71	12.51	55.65	131.86	23.10
C0300-051-0560-X	0.300	7.62	0.051	1.30	0.560	14.22	0.451	11.45	0.379	9.63	12.51	55.65	114.54	20.05
C0300-051-0620-X	0.300	7.62	0.051	1.30	0.620	15.75	0.497	12.61	0.415	10.54	12.51	55.65	101.29	17.74
C0300-051-0690-X	0.300	7.62	0.051	1.30	0.690	17.53	0.550	13.96	0.453	11.51	12.51	55.65	89.21	15.62
C0300-051-0750-X	0.300	7.62	0.051	1.30	0.750	19.05	0.596	15.13	0.483	12.27	12.51	55.65	80.97	14.19
C0300-051-0810-X	0.300	7.62	0.051	1.30	0.810	20.57	0.641	16.29	0.514	13.06	12.51	55.65	74.14	12.98
C0300-051-0880-X	0.300	7.62	0.051	1.30	0.880	22.35	0.695	17.64	0.550	13.97	12.51	55.65	67.47	11.82
C0300-051-0940-X	0.300	7.62	0.051	1.30	0.940	23.88	0.740	18.80	0.580	14.73	12.51	55.65	62.64	10.96
C0300-051-1000-X	0.300	7.62	0.051	1.30	1.000	25.40	0.786	19.96	0.611	15.52	12.51	55.65	58.39	10.23
C0300-051-1120-X	0.300	7.62	0.051	1.30	1.120	28.45	0.877	22.29	0.672	17.07	12.51	55.65	51.56	9.04
C0300-051-1250-X	0.300	7.62	0.051	1.30	1.250	31.75	0.976	24.80	0.738	18.75	12.51	55.65	45.73	8.00
C0300-051-1380-X	0.300	7.62	0.051	1.30	1.380	35.05	1.075	27.32	0.805	20.45	12.51	55.65	41.07	7.20
C0300-051-1500-X	0.300	7.62	0.051	1.30	1.500	38.10	1.167	29.64	0.866	22.00	12.51	55.65	37.57	6.58
C0300-051-1750-X	0.300	7.62	0.051	1.30	1.750	44.45	1.357	34.47	0.993	25.22	12.51	55.65	31.82	5.57
C0300-051-2000-X	0.300	7.62	0.051	1.30	2.000	50.80	1.548	39.31	1.121	28.47	12.51	55.65	27.66	4.85
C0300-051-2250-X	0.300	7.62	0.051	1.30	2.250	57.15	1.737	44.13	1.248	31.70	12.51	55.65	24.41	4.27
C0300-051-2500-X	0.300	7.62	0.051	1.30	2.500	63.50	1.929	49.00	1.376	34.95	12.51	55.65	21.91	3.84
C0300-051-2750-X	0.300	7.62	0.051	1.30	2.750	69.85	2.119	53.82	1.503	38.18	12.51	55.65	19.83	3.47
C0300-051-3000-X	0.300	7.62	0.051	1.30	3.000	76.20	2.308	58.62	1.631	41.43	12.51	55.65	18.08	3.17
D21550X*	0.340	8.63	0.025	0.63	0.630	16.00	0.342	8.69	0.161	4.10	24.06	5.41	4.23	0.74
D21560X*	0.340	8.63	0.025	0.63	0.965	24.50	0.511	12.99	0.211	5.36	24.06	5.41	2.68	0.47
D21570X*	0.340	8.63	0.025	0.63	1.457	37.00	0.770	19.55	0.285	7.25	24.06	5.41	1.77	0.31
D21580X*	0.340	8.63	0.025	0.63	2.165	55.00	1.151	29.24	0.385	9.77	24.06	5.41	1.20	0.21
D21590X*	0.340	8.63	0.025	0.63	3.169	80.50	1.668	42.36	0.533	13.55	23.75	5.34	0.80	0.14
D21750X*	0.346	8.80	0.031	0.80	0.571	14.50	0.354	9.00	0.205	5.20	47.24	10.62	11.02	1.93
D21760X*	0.346	8.80	0.031	0.80	0.846	21.50	0.507	12.87	0.268	6.80	47.24	10.62	7.02	1.23
D21770X*	0.346	8.80	0.031	0.80	1.260	32.00	0.737	18.73	0.362	9.20	47.24	10.62	4.57	0.80
D21780X*	0.346	8.80	0.031	0.80	1.850	47.00	1.076	27.33	0.488	12.40	47.24	10.62	3.08	0.54
D21790X*	0.346	8.80	0.031	0.80	2.677	68.00	1.547	39.30	0.677	17.20	47.24	10.62	2.11	0.37
D21950X	0.354	9.00	0.039	1.00	0.512	13.00	0.348	8.83	0.217	5.50	87.76	19.73	27.01	4.73
D21960X	0.354	9.00	0.039	1.00	0.748	19.00	0.490	12.45	0.295	7.50	87.76	19.73	17.19	3.01
D21970X	0.354	9.00	0.039	1.00	1.122	28.50	0.722	18.33	0.413	10.50	87.76	19.73	11.08	1.94
D21980X	0.354	9.00	0.039	1.00	1.594	40.50	1.006	25.55	0.571	14.50	87.76	19.73	7.54	1.32
D21990X	0.354	9.00	0.039	1.00	2.323	59.00	1.460	37.08	0.807	20.50	87.76	19.73	5.14	0.90
C0360-026-0500-X	0.360	9.14	0.026	0.66	0.500	12.70	0.300	7.62	0.117	2.97	1.53	6.81	7.66	1.35
C0360-026-0560-X	0.360	9.14	0.026	0.66	0.560	14.22	0.336	8.53	0.123	3.12	1.53	6.81	6.83	1.19
C0360-026-0620-X	0.360	9.14	0.026	0.66	0.620	15.75	0.371	9.44	0.129	3.28	1.53	6.81	6.16	1.09
C0360-026-0690-X	0.360	9.14	0.026	0.66	0.690	17.53	0.416	10.55	0.136	3.45	1.53	6.81	5.58	0.98
C0360-026-0750-X	0.360	9.14	0.026	0.66	0.750	19.05	0.449	11.39	0.143	3.63	1.53	6.81	5.08	0.89
C0360-026-0810-X	0.360	9.14	0.026	0.66	0.810	20.57	0.487	12.38	0.148	3.76	1.53	6.81	4.75	0.84
C0360-026-0880-X	0.360	9.14	0.026	0.66	0.880	22.35	0.505	12.82	0.162	4.11	1.53	6.81	4.08	0.72
C0360-026-0940-X	0.360	9.14	0.026	0.66	0.940	23.88	0.540	13.72	0.169	4.29	1.53	6.81	3.83	0.67
C0360-026-1000-X	0.360	9.14	0.026	0.66	1.000	25.40	0.551	14.01	0.181	4.60	1.53	6.81	3.42	0.60
C0360-026-1120-X	0.360	9.14	0.026	0.66	1.120	28.45	0.648	16.47	0.187	4.75	1.53	6.81	3.25	0.58
C0360-026-1250-X	0.360	9.14	0.026	0.66	1.250	31.75	0.709	18.01	0.213	5.41	1.53	6.81	2.83	0.49
C0360-026-1500-X	0.360	9.14	0.026	0.66	1.500	38.10	0.843	21.42	0.242	6.15	1.53	6.81	2.33	0.40
C0360-026-1750-X	0.360	9.14	0.026	0.66	1.750	44.45	0.984	24.99	0.270	6.86	1.53	6.81	2.00	0.35
C0360-026-2000-X	0.360	9.14	0.026	0.66	2.000	50.80	1.124	28.56	0.298	7.57	1.53	6.81	1.75	0.32
C0360-029-0500-X	0.360	9.14	0.029	0.74	0.500	12.70	0.303	7.70	0.150	3.81	2.12	9.43	10.75	1.89
C0360-029-0560-X	0.360	9.14	0.029	0.74	0.560	14.22	0.337	8.56	0.159	4.04	2.12	9.43	9.50	1.66
C0360-029-0620-X	0.360	9.14	0.029	0.74	0.620	15.75	0.371	9.42	0.167	4.24	2.12	9.43	8.50	1.49
C0360-029-0690-X	0.360	9.14	0.029	0.74	0.690	17.53	0.408	10.35	0.177	4.50	2.12	9.43	7.50	1.31
C0360-029-0750-X	0.360	9.14	0.029	0.74	0.750	19.05	0.440	11.18	0.186	4.72	2.12	9.43	6.83	1.19
C0360-029-0810-X	0.360	9.14	0.029	0.74	0.810	20.57	0.476	12.08	0.194	4.93	2.12	9.43	6.33	1.10
C0360-029-0880-X	0.360	9.14	0.029	0.74	0.880	22.35	0.512	13.00	0.204	5.18	2.12	9.43	5.75	1.02
C0360-029-0940-X	0.360	9.14	0.029	0.74	0.940	23.88	0.549	13.94	0.213	5.41	2.12	9.43	5.41	0.95
C0360-029-1000-X	0.360	9.14	0.029	0.74	1.000	25.40	0.583	14.82	0.221	5.61	2.12	9.43	5.08	0.89
C0360-029-1120-X	0.360	9.14	0.029	0.74	1.120	28.45	0.649	16.49	0.238	6.05	2.12	9.43	4.50	0.79

SPEC TO ORDER: WWW.ASRAYMOND.COM OR SEE PHONE & FAX NUMBERS ON THE BACK COVER

Part Numbers with an "*" are squared and not ground.

316 STAINLESS STEEL

Catalog #	Outside Diameter (OD)		Wire Diameter (d)		Free Length (L) Approx		Load Length (L_1)		Solid Height (Sh) Approx		Load (P) at L_1		Spring Rate (R)	
	in	mm	in	mm	in	mm	in	mm	in	mm	lb	N	lb/in	N/mm
C0360-029-1250-X	0.360	9.14	0.029	0.74	1.250	31.75	0.721	18.30	0.257	6.53	2.12	9.43	4.00	0.70
C0360-029-1380-X	0.360	9.14	0.029	0.74	1.380	35.05	0.789	20.04	0.275	6.99	2.12	9.43	3.58	0.63
C0360-029-1500-X	0.360	9.14	0.029	0.74	1.500	38.10	0.865	21.96	0.292	7.42	2.12	9.43	3.33	0.58
C0360-029-1750-X	0.360	9.14	0.029	0.74	1.750	44.45	1.002	25.46	0.328	8.33	2.12	9.43	2.83	0.49
C0360-029-2000-X	0.360	9.14	0.029	0.74	2.000	50.80	1.124	28.54	0.364	9.25	2.12	9.43	2.42	0.42
C0360-032-0380-X	0.360	9.14	0.032	0.81	0.380	9.65	0.243	6.17	0.151	3.84	2.83	12.59	20.66	3.63
C0360-032-0440-X	0.360	9.14	0.032	0.81	0.440	11.18	0.277	7.02	0.162	4.11	2.83	12.59	17.33	3.03
C0360-032-0500-X	0.360	9.14	0.032	0.81	0.500	12.70	0.310	7.88	0.159	4.04	2.83	12.59	14.91	2.61
C0360-032-0560-X	0.360	9.14	0.032	0.81	0.560	14.22	0.351	8.93	0.167	4.24	2.83	12.59	13.58	2.38
C0360-032-0620-X	0.360	9.14	0.032	0.81	0.620	15.75	0.392	9.95	0.175	4.45	2.83	12.59	12.41	2.17
C0360-032-0690-X	0.360	9.14	0.032	0.81	0.690	17.53	0.424	10.78	0.191	4.85	2.83	12.59	10.66	1.87
C0360-032-0750-X	0.360	9.14	0.032	0.81	0.750	19.05	0.464	11.79	0.199	5.05	2.83	12.59	9.91	1.73
C0360-032-0810-X	0.360	9.14	0.032	0.81	0.810	20.57	0.506	12.86	0.207	5.26	2.83	12.59	9.33	1.63
C0360-032-0880-X	0.360	9.14	0.032	0.81	0.880	22.35	0.537	13.63	0.224	5.69	2.83	12.59	8.25	1.45
C0360-032-0940-X	0.360	9.14	0.032	0.81	0.940	23.88	0.578	14.69	0.231	5.87	2.83	12.59	7.83	1.37
C0360-032-1000-X	0.360	9.14	0.032	0.81	1.000	25.40	0.600	15.24	0.247	6.27	2.83	12.59	7.08	1.24
C0360-032-1120-X	0.360	9.14	0.032	0.81	1.120	28.45	0.667	16.93	0.270	6.86	2.83	12.59	6.25	1.10
C0360-032-1250-X	0.360	9.14	0.032	0.81	1.250	31.75	0.735	18.66	0.303	7.70	2.83	12.59	5.50	0.96
C0360-032-1380-X	0.360	9.14	0.032	0.81	1.380	35.05	0.813	20.66	0.317	8.05	2.83	12.59	5.00	0.88
C0360-032-1500-X	0.360	9.14	0.032	0.81	1.500	38.10	0.870	22.11	0.344	8.74	2.83	12.59	4.50	0.79
C0360-032-1750-X	0.360	9.14	0.032	0.81	1.750	44.45	1.011	25.68	0.391	9.93	2.83	12.59	3.83	0.67
C0360-032-2000-X	0.360	9.14	0.032	0.81	2.000	50.80	1.150	29.21	0.434	11.02	2.83	12.59	3.33	0.58
C0360-032-2250-X	0.360	9.14	0.032	0.81	2.250	57.15	1.355	34.42	0.464	11.79	2.83	12.59	3.17	0.56
C0360-032-2500-X	0.360	9.14	0.032	0.81	2.500	63.50	1.500	38.10	0.498	12.65	2.83	12.59	2.83	0.49
C0360-035-0440-X	0.360	9.14	0.035	0.89	0.440	11.18	0.284	7.21	0.182	4.62	3.69	16.41	23.66	4.15
C0360-035-0500-X	0.360	9.14	0.035	0.89	0.500	12.70	0.318	8.09	0.195	4.95	3.69	16.41	20.33	3.56
C0360-035-0560-X	0.360	9.14	0.035	0.89	0.560	14.22	0.353	8.97	0.208	5.28	3.69	16.41	17.83	3.12
C0360-035-0620-X	0.360	9.14	0.035	0.89	0.620	15.75	0.388	9.86	0.220	5.59	3.69	16.41	15.91	2.78
C0360-035-0690-X	0.360	9.14	0.035	0.89	0.690	17.53	0.428	10.87	0.235	5.97	3.69	16.41	14.08	2.47
C0360-035-0750-X	0.360	9.14	0.035	0.89	0.750	19.05	0.462	11.74	0.247	6.27	3.69	16.41	12.83	2.24
C0360-035-0810-X	0.360	9.14	0.035	0.89	0.810	20.57	0.498	12.65	0.260	6.60	3.69	16.41	11.83	2.07
C0360-035-0880-X	0.360	9.14	0.035	0.89	0.880	22.35	0.539	13.70	0.275	6.99	3.69	16.41	10.83	1.89
C0360-035-0940-X	0.360	9.14	0.035	0.89	0.940	23.88	0.574	14.58	0.287	7.29	3.69	16.41	10.08	1.77
C0360-035-1000-X	0.360	9.14	0.035	0.89	1.000	25.40	0.608	15.44	0.300	7.62	3.69	16.41	9.41	1.65
C0360-035-1120-X	0.360	9.14	0.035	0.89	1.120	28.45	0.677	17.20	0.325	8.26	3.69	16.41	8.33	1.45
C0360-035-1250-X	0.360	9.14	0.035	0.89	1.250	31.75	0.752	19.11	0.352	8.94	3.69	16.41	7.41	1.30
C0360-035-1380-X	0.360	9.14	0.035	0.89	1.380	35.05	0.826	20.99	0.379	9.63	3.69	16.41	6.66	1.17
C0360-035-1500-X	0.360	9.14	0.035	0.89	1.500	38.10	0.893	22.69	0.404	10.26	3.69	16.41	6.08	1.07
C0360-035-1750-X	0.360	9.14	0.035	0.89	1.750	44.45	1.047	26.59	0.457	11.61	3.69	16.41	5.25	0.93
C0360-035-2000-X	0.360	9.14	0.035	0.89	2.000	50.80	1.180	29.97	0.509	12.93	3.69	16.41	4.50	0.79
C0360-035-2250-X	0.360	9.14	0.035	0.89	2.250	57.15	1.327	33.71	0.562	14.27	3.69	16.41	4.00	0.70
C0360-035-2500-X	0.360	9.14	0.035	0.89	2.500	63.50	1.470	37.34	0.614	15.60	3.69	16.41	3.58	0.63
C0360-038-0440-X	0.360	9.14	0.038	0.97	0.440	11.18	0.289	7.34	0.190	4.83	4.70	20.91	31.15	5.46
C0360-038-0500-X	0.360	9.14	0.038	0.97	0.500	12.70	0.335	8.50	0.199	5.05	4.70	20.91	28.41	4.97
C0360-038-0560-X	0.360	9.14	0.038	0.97	0.560	14.22	0.364	9.25	0.218	5.54	4.70	20.91	23.99	4.20
C0360-038-0620-X	0.360	9.14	0.038	0.97	0.620	15.75	0.393	9.99	0.237	6.02	4.70	20.91	20.74	3.63
C0360-038-0690-X	0.360	9.14	0.038	0.97	0.690	17.53	0.435	11.04	0.256	6.50	4.70	20.91	18.41	3.22
C0360-038-0750-X	0.360	9.14	0.038	0.97	0.750	19.05	0.479	12.16	0.266	6.76	4.70	20.91	17.33	3.03
C0360-038-0810-X	0.360	9.14	0.038	0.97	0.810	20.57	0.508	12.91	0.285	7.24	4.70	20.91	15.58	2.73
C0360-038-0880-X	0.360	9.14	0.038	0.97	0.880	22.35	0.548	13.92	0.304	7.72	4.70	20.91	14.16	2.49
C0360-038-0940-X	0.360	9.14	0.038	0.97	0.940	23.88	0.578	14.69	0.323	8.20	4.70	20.91	12.99	2.28
C0360-038-1000-X	0.360	9.14	0.038	0.97	1.000	25.40	0.624	15.85	0.332	8.43	4.70	20.91	12.50	2.19
C0360-038-1120-X	0.360	9.14	0.038	0.97	1.120	28.45	0.683	17.34	0.370	9.40	4.70	20.91	10.75	1.89
C0360-038-1250-X	0.360	9.14	0.038	0.97	1.250	31.75	0.768	19.50	0.399	10.13	4.70	20.91	9.75	1.72
C0360-038-1380-X	0.360	9.14	0.038	0.97	1.380	35.05	0.837	21.27	0.437	11.10	4.70	20.91	8.66	1.52
C0360-038-1500-X	0.360	9.14	0.038	0.97	1.500	38.10	0.912	23.17	0.465	11.81	4.70	20.91	8.00	1.40
C0360-038-1750-X	0.360	9.14	0.038	0.97	1.750	44.45	1.070	27.18	0.526	13.36	4.70	20.91	6.91	1.21
C0360-038-2000-X	0.360	9.14	0.038	0.97	2.000	50.80	1.216	30.90	0.587	14.91	4.70	20.91	6.00	1.05
C0360-038-2250-X	0.360	9.14	0.038	0.97	2.250	57.15	1.368	34.76	0.649	16.48	4.70	20.91	5.33	0.93
C0360-038-2500-X	0.360	9.14	0.038	0.97	2.500	63.50	1.510	38.36	0.711	18.06	4.70	20.91	4.75	0.84
C0360-040-0440-X	0.360	9.14	0.040	1.02	0.440	11.18	0.297	7.55	0.218	5.54	5.46	24.29	38.32	6.71
C0360-040-0500-X	0.360	9.14	0.040	1.02	0.500	12.70	0.334	8.47	0.234	5.94	5.46	24.29	32.82	5.74
C0360-040-0560-X	0.360	9.14	0.040	1.02	0.560	14.22	0.370	9.39	0.250	6.35	5.46	24.29	28.74	5.03
C0360-040-0620-X	0.360	9.14	0.040	1.02	0.620	15.75	0.406	10.32	0.267	6.78	5.46	24.29	25.57	4.48

FOR INFORMATION ON ALTERNATIVE FINISHES, SEE PAGE 311

Part Numbers with an "*" are squared and not ground.

316 STAINLESS STEEL

Catalog #	Outside Diameter (OD)		Wire Diameter (d)		Free Length (L) Approx		Load Length (L_1)		Solid Height (Sh) Approx		Load (P) at L_1		Spring Rate (R)	
	in	mm	in	mm	in	mm	in	mm	in	mm	lb	N	lb/in	N/mm
C0360-040-0690-X	0.360	9.14	0.040	1.02	0.690	17.53	0.448	11.38	0.286	7.26	5.46	24.29	22.57	3.96
C0360-040-0750-X	0.360	9.14	0.040	1.02	0.750	19.05	0.484	12.30	0.302	7.67	5.46	24.29	20.58	3.61
C0360-040-0810-X	0.360	9.14	0.040	1.02	0.810	20.57	0.521	13.23	0.318	8.08	5.46	24.29	18.91	3.31
C0360-040-0880-X	0.360	9.14	0.040	1.02	0.880	22.35	0.563	14.30	0.337	8.56	5.46	24.29	17.24	3.01
C0360-040-0940-X	0.360	9.14	0.040	1.02	0.940	23.88	0.598	15.20	0.353	8.97	5.46	24.29	15.99	2.80
C0360-040-1000-X	0.360	9.14	0.040	1.02	1.000	25.40	0.636	16.14	0.370	9.40	5.46	24.29	14.99	2.63
C0360-040-1120-X	0.360	9.14	0.040	1.02	1.120	28.45	0.707	17.97	0.402	10.21	5.46	24.29	13.24	2.31
C0360-040-1250-X	0.360	9.14	0.040	1.02	1.250	31.75	0.785	19.93	0.438	11.13	5.46	24.29	11.75	2.07
C0360-040-1380-X	0.360	9.14	0.040	1.02	1.380	35.05	0.863	21.93	0.473	12.01	5.46	24.29	10.58	1.86
C0360-040-1500-X	0.360	9.14	0.040	1.02	1.500	38.10	0.939	23.86	0.505	12.83	5.46	24.29	9.75	1.72
C0360-040-1750-X	0.360	9.14	0.040	1.02	1.750	44.45	1.087	27.62	0.573	14.55	5.46	24.29	8.25	1.45
C0360-040-2000-X	0.360	9.14	0.040	1.02	2.000	50.80	1.237	31.43	0.641	16.28	5.46	24.29	7.16	1.26
C0360-040-2250-X	0.360	9.14	0.040	1.02	2.250	57.15	1.387	35.23	0.709	18.01	5.46	24.29	6.33	1.10
C0360-040-2500-X	0.360	9.14	0.040	1.02	2.500	63.50	1.535	39.00	0.777	19.74	5.46	24.29	5.66	1.00
C0360-042-0440-X	0.360	9.14	0.042	1.07	0.440	11.18	0.312	7.94	0.209	5.31	6.17	27.45	48.40	8.48
C0360-042-0500-X	0.360	9.14	0.042	1.07	0.500	12.70	0.347	8.80	0.231	5.87	6.17	27.45	40.23	7.04
C0360-042-0560-X	0.360	9.14	0.042	1.07	0.560	14.22	0.381	9.67	0.252	6.40	6.17	27.45	34.40	6.02
C0360-042-0620-X	0.360	9.14	0.042	1.07	0.620	15.75	0.428	10.87	0.262	6.65	6.17	27.45	32.15	5.64
C0360-042-0690-X	0.360	9.14	0.042	1.07	0.690	17.53	0.472	11.99	0.284	7.21	6.17	27.45	28.32	4.96
C0360-042-0750-X	0.360	9.14	0.042	1.07	0.750	19.05	0.510	12.96	0.301	7.65	6.17	27.45	25.74	4.50
C0360-042-0810-X	0.360	9.14	0.042	1.07	0.810	20.57	0.541	13.73	0.326	8.28	6.17	27.45	22.91	4.01
C0360-042-0880-X	0.360	9.14	0.042	1.07	0.880	22.35	0.586	14.89	0.346	8.79	6.17	27.45	20.99	3.68
C0360-042-0940-X	0.360	9.14	0.042	1.07	0.940	23.88	0.619	15.73	0.368	9.35	6.17	27.45	19.24	3.36
C0360-042-1000-X	0.360	9.14	0.042	1.07	1.000	25.40	0.655	16.65	0.388	9.86	6.17	27.45	17.91	3.13
C0360-042-1120-X	0.360	9.14	0.042	1.07	1.120	28.45	0.724	18.39	0.430	10.92	6.17	27.45	15.58	2.73
C0360-042-1250-X	0.360	9.14	0.042	1.07	1.250	31.75	0.814	20.68	0.463	11.76	6.17	27.45	14.16	2.49
C0360-042-1380-X	0.360	9.14	0.042	1.07	1.380	35.05	0.905	22.99	0.495	12.57	6.17	27.45	12.99	2.28
C0360-042-1500-X	0.360	9.14	0.042	1.07	1.500	38.10	0.989	25.12	0.525	13.34	6.17	27.45	12.08	2.12
C0360-042-1750-X	0.360	9.14	0.042	1.07	1.750	44.45	1.122	28.50	0.621	15.77	6.17	27.45	9.83	1.72
C0360-042-2000-X	0.360	9.14	0.042	1.07	2.000	50.80	1.281	32.53	0.695	17.65	6.17	27.45	8.58	1.51
C0360-042-2250-X	0.360	9.14	0.042	1.07	2.250	57.15	1.436	36.47	0.770	19.56	6.17	27.45	7.58	1.33
C0360-042-2500-X	0.360	9.14	0.042	1.07	2.500	63.50	1.585	40.27	0.844	21.44	6.17	27.45	6.75	1.19
C0360-045-0440-X	0.360	9.14	0.045	1.14	0.440	11.18	0.325	8.26	0.224	5.69	7.55	33.58	65.81	11.52
C0360-045-0500-X	0.360	9.14	0.045	1.14	0.500	12.70	0.362	9.20	0.247	6.27	7.55	33.58	54.73	9.58
C0360-045-0560-X	0.360	9.14	0.045	1.14	0.560	14.22	0.399	10.13	0.270	6.86	7.55	33.58	46.81	8.20
C0360-045-0620-X	0.360	9.14	0.045	1.14	0.620	15.75	0.435	11.06	0.292	7.42	7.55	33.58	40.90	7.16
C0360-045-0690-X	0.360	9.14	0.045	1.14	0.690	17.53	0.483	12.27	0.314	7.98	7.55	33.58	36.49	6.39
C0360-045-0750-X	0.360	9.14	0.045	1.14	0.750	19.05	0.520	13.21	0.337	8.56	7.55	33.58	32.82	5.74
C0360-045-0810-X	0.360	9.14	0.045	1.14	0.810	20.57	0.557	14.14	0.359	9.12	7.55	33.58	29.82	5.22
C0360-045-0880-X	0.360	9.14	0.045	1.14	0.880	22.35	0.604	15.33	0.382	9.70	7.55	33.58	27.32	4.78
C0360-045-0940-X	0.360	9.14	0.045	1.14	0.940	23.88	0.641	16.28	0.404	10.26	7.55	33.58	25.24	4.41
C0360-045-1000-X	0.360	9.14	0.045	1.14	1.000	25.40	0.677	17.21	0.427	10.85	7.55	33.58	23.41	4.10
C0360-045-1120-X	0.360	9.14	0.045	1.14	1.120	28.45	0.751	19.09	0.472	11.99	7.55	33.58	20.49	3.59
C0360-045-1250-X	0.360	9.14	0.045	1.14	1.250	31.75	0.836	21.24	0.516	13.11	7.55	33.58	18.24	3.19
C0360-045-1380-X	0.360	9.14	0.045	1.14	1.380	35.05	0.920	23.36	0.562	14.27	7.55	33.58	16.41	2.87
C0360-045-1500-X	0.360	9.14	0.045	1.14	1.500	38.10	0.994	25.24	0.607	15.42	7.55	33.58	14.91	2.61
C0360-045-1750-X	0.360	9.14	0.045	1.14	1.750	44.45	1.154	29.30	0.694	17.63	7.55	33.58	12.66	2.22
C0360-045-2000-X	0.360	9.14	0.045	1.14	2.000	50.80	1.313	33.36	0.778	19.76	7.55	33.58	11.00	1.93
C0360-045-2250-X	0.360	9.14	0.045	1.14	2.250	57.15	1.475	37.47	0.862	21.89	7.55	33.58	9.75	1.72
C0360-045-2500-X	0.360	9.14	0.045	1.14	2.500	63.50	1.637	41.57	0.946	24.03	7.55	33.58	8.75	1.54
C0360-045-2750-X	0.360	9.14	0.045	1.14	2.750	69.85	1.834	46.59	0.990	25.15	7.55	33.58	8.25	1.45
C0360-047-0440-X	0.360	9.14	0.047	1.19	0.440	11.18	0.329	8.35	0.257	6.53	8.57	38.12	77.14	13.50
C0360-047-0500-X	0.360	9.14	0.047	1.19	0.500	12.70	0.370	9.39	0.277	7.04	8.57	38.12	65.72	11.51
C0360-047-0560-X	0.360	9.14	0.047	1.19	0.560	14.22	0.410	10.42	0.297	7.54	8.57	38.12	57.23	10.02
C0360-047-0620-X	0.360	9.14	0.047	1.19	0.620	15.75	0.451	11.45	0.318	8.08	8.57	38.12	50.73	8.88
C0360-047-0690-X	0.360	9.14	0.047	1.19	0.690	17.53	0.498	12.66	0.341	8.66	8.57	38.12	44.73	7.83
C0360-047-0750-X	0.360	9.14	0.047	1.19	0.750	19.05	0.539	13.69	0.361	9.17	8.57	38.12	40.65	7.13
C0360-047-0810-X	0.360	9.14	0.047	1.19	0.810	20.57	0.580	14.73	0.381	9.68	8.57	38.12	37.24	6.51
C0360-047-0880-X	0.360	9.14	0.047	1.19	0.880	22.35	0.627	15.93	0.405	10.29	8.57	38.12	33.90	5.94
C0360-047-0940-X	0.360	9.14	0.047	1.19	0.940	23.88	0.668	16.98	0.425	10.80	8.57	38.12	31.57	5.53
C0360-047-1000-X	0.360	9.14	0.047	1.19	1.000	25.40	0.708	17.99	0.445	11.30	8.57	38.12	29.40	5.15
C0360-047-1120-X	0.360	9.14	0.047	1.19	1.120	28.45	0.790	20.07	0.485	12.32	8.57	38.12	25.99	4.55
C0360-047-1250-X	0.360	9.14	0.047	1.19	1.250	31.75	0.878	22.31	0.529	13.44	8.57	38.12	23.07	4.05
C0360-047-1380-X	0.360	9.14	0.047	1.19	1.380	35.05	0.967	24.55	0.573	14.55	8.57	38.12	20.74	3.63

SPEC TO ORDER: WWW.ASRAYMOND.COM OR SEE PHONE & FAX NUMBERS ON THE BACK COVER

Part Numbers with an "*" are squared and not ground.

316 STAINLESS STEEL

Catalog #	Outside Diameter (OD)		Wire Diameter (d)		Free Length (L) Approx		Load Length (L_1)		Solid Height (Sh) Approx		Load (P) at L_1		Spring Rate (R)	
	in	mm	in	mm	in	mm	in	mm	in	mm	lb	N	lb/in	N/mm
C0360-047-1500-X	0.360	9.14	0.047	1.19	1.500	38.10	1.049	26.63	0.613	15.57	8.57	38.12	18.99	3.33
C0360-047-1750-X	0.360	9.14	0.047	1.19	1.750	44.45	1.217	30.90	0.697	17.70	8.57	38.12	16.08	2.82
C0360-047-2000-X	0.360	9.14	0.047	1.19	2.000	50.80	1.387	35.24	0.781	19.84	8.57	38.12	13.99	2.45
C0360-047-2250-X	0.360	9.14	0.047	1.19	2.250	57.15	1.559	39.60	0.865	21.97	8.57	38.12	12.41	2.17
C0360-047-2500-X	0.360	9.14	0.047	1.19	2.500	63.50	1.726	43.84	0.949	24.10	8.57	38.12	11.08	1.94
C0360-047-2750-X	0.360	9.14	0.047	1.19	2.750	69.85	1.899	48.24	1.033	26.24	8.57	38.12	10.08	1.77
C0360-047-3000-X	0.360	9.14	0.047	1.19	3.000	76.20	2.064	52.43	1.117	28.37	8.57	38.12	9.16	1.61
C0360-047-3250-X	0.360	9.14	0.047	1.19	3.250	82.55	2.231	56.66	1.201	30.51	8.57	38.12	8.41	1.47
C0360-047-3500-X	0.360	9.14	0.047	1.19	3.500	88.90	2.405	61.09	1.284	32.61	8.57	38.12	7.83	1.37
C0360-049-0440-X	0.360	9.14	0.049	1.24	0.440	11.18	0.335	8.52	0.271	6.88	9.47	42.12	90.55	15.87
C0360-049-0500-X	0.360	9.14	0.049	1.24	0.500	12.70	0.377	9.58	0.293	7.44	9.47	42.12	77.05	13.50
C0360-049-0560-X	0.360	9.14	0.049	1.24	0.560	14.22	0.419	10.64	0.315	8.00	9.47	42.12	67.06	11.75
C0360-049-0620-X	0.360	9.14	0.049	1.24	0.620	15.75	0.460	11.69	0.336	8.53	9.47	42.12	59.31	10.39
C0360-049-0690-X	0.360	9.14	0.049	1.24	0.690	17.53	0.509	12.93	0.362	9.19	9.47	42.12	52.31	9.16
C0360-049-0750-X	0.360	9.14	0.049	1.24	0.750	19.05	0.551	13.98	0.384	9.75	9.47	42.12	47.48	8.32
C0360-049-0810-X	0.360	9.14	0.049	1.24	0.810	20.57	0.592	15.04	0.405	10.29	9.47	42.12	43.48	7.62
C0360-049-0880-X	0.360	9.14	0.049	1.24	0.880	22.35	0.641	16.29	0.431	10.95	9.47	42.12	39.65	6.95
C0360-049-0940-X	0.360	9.14	0.049	1.24	0.940	23.88	0.683	17.34	0.453	11.51	9.47	42.12	36.82	6.44
C0360-049-1000-X	0.360	9.14	0.049	1.24	1.000	25.40	0.724	18.39	0.474	12.04	9.47	42.12	34.32	6.01
C0360-049-1120-X	0.360	9.14	0.049	1.24	1.120	28.45	0.808	20.51	0.518	13.16	9.47	42.12	30.32	5.31
C0360-049-1250-X	0.360	9.14	0.049	1.24	1.250	31.75	0.898	22.81	0.565	14.35	9.47	42.12	26.91	4.71
C0360-049-1380-X	0.360	9.14	0.049	1.24	1.380	35.05	0.988	25.09	0.612	15.54	9.47	42.12	24.16	4.24
C0360-049-1500-X	0.360	9.14	0.049	1.24	1.500	38.10	1.071	27.20	0.656	16.66	9.47	42.12	22.07	3.87
C0360-049-1750-X	0.360	9.14	0.049	1.24	1.750	44.45	1.245	31.62	0.747	18.97	9.47	42.12	18.74	3.27
C0360-049-2000-X	0.360	9.14	0.049	1.24	2.000	50.80	1.420	36.07	0.837	21.26	9.47	42.12	16.33	2.85
C0360-049-2250-X	0.360	9.14	0.049	1.24	2.250	57.15	1.593	40.46	0.928	23.57	9.47	42.12	14.41	2.52
C0360-049-2500-X	0.360	9.14	0.049	1.24	2.500	63.50	1.766	44.87	1.019	25.88	9.47	42.12	12.91	2.26
C0360-049-2750-X	0.360	9.14	0.049	1.24	2.750	69.85	1.938	49.22	1.110	28.19	9.47	42.12	11.66	2.05
C0360-049-3000-X	0.360	9.14	0.049	1.24	3.000	76.20	2.112	53.64	1.200	30.48	9.47	42.12	10.66	1.87
C0360-049-3250-X	0.360	9.14	0.049	1.24	3.250	82.55	2.286	58.08	1.291	32.79	9.47	42.12	9.83	1.72
C0360-049-3500-X	0.360	9.14	0.049	1.24	3.500	88.90	2.457	62.41	1.382	35.10	9.47	42.12	9.08	1.59
C0360-051-0440-X	0.360	9.14	0.051	1.30	0.440	11.18	0.339	8.62	0.286	7.26	10.64	47.33	105.62	18.49
C0360-051-0500-X	0.360	9.14	0.051	1.30	0.500	12.70	0.381	9.69	0.309	7.85	10.64	47.33	89.71	15.71
C0360-051-0560-X	0.360	9.14	0.051	1.30	0.560	14.22	0.424	10.76	0.333	8.46	10.64	47.33	77.97	13.66
C0360-051-0620-X	0.360	9.14	0.051	1.30	0.620	15.75	0.466	11.83	0.356	9.04	10.64	47.33	68.89	12.07
C0360-051-0690-X	0.360	9.14	0.051	1.30	0.690	17.53	0.515	13.08	0.384	9.75	10.64	47.33	60.73	10.63
C0360-051-0750-X	0.360	9.14	0.051	1.30	0.750	19.05	0.557	14.14	0.407	10.34	10.64	47.33	55.06	9.65
C0360-051-0810-X	0.360	9.14	0.051	1.30	0.810	20.57	0.599	15.21	0.431	10.95	10.64	47.33	50.40	8.83
C0360-051-0880-X	0.360	9.14	0.051	1.30	0.880	22.35	0.648	16.46	0.458	11.63	10.64	47.33	45.90	8.04
C0360-051-0940-X	0.360	9.14	0.051	1.30	0.940	23.88	0.690	17.53	0.482	12.24	10.64	47.33	42.57	7.46
C0360-051-1000-X	0.360	9.14	0.051	1.30	1.000	25.40	0.732	18.60	0.505	12.83	10.64	47.33	39.73	6.95
C0360-051-1120-X	0.360	9.14	0.051	1.30	1.120	28.45	0.817	20.74	0.552	14.02	10.64	47.33	35.07	6.15
C0360-051-1250-X	0.360	9.14	0.051	1.30	1.250	31.75	0.908	23.05	0.603	15.32	10.64	47.33	31.07	5.45
C0360-051-1380-X	0.360	9.14	0.051	1.30	1.380	35.05	0.999	25.37	0.654	16.61	10.64	47.33	27.91	4.89
C0360-051-1500-X	0.360	9.14	0.051	1.30	1.500	38.10	1.084	27.53	0.701	17.81	10.64	47.33	25.57	4.48
C0360-051-1750-X	0.360	9.14	0.051	1.30	1.750	44.45	1.259	31.97	0.800	20.32	10.64	47.33	21.66	3.80
C0360-051-2000-X	0.360	9.14	0.051	1.30	2.000	50.80	1.435	36.45	0.898	22.81	10.64	47.33	18.83	3.29
C0360-051-2250-X	0.360	9.14	0.051	1.30	2.250	57.15	1.608	40.85	0.996	25.30	10.64	47.33	16.58	2.91
C0360-051-2500-X	0.360	9.14	0.051	1.30	2.500	63.50	1.786	45.38	1.094	27.79	10.64	47.33	14.91	2.61
C0360-051-2750-X	0.360	9.14	0.051	1.30	2.750	69.85	1.962	49.82	1.192	30.28	10.64	47.33	13.49	2.36
C0360-051-3000-X	0.360	9.14	0.051	1.30	3.000	76.20	2.137	54.28	1.290	32.77	10.64	47.33	12.33	2.15
C0360-051-3250-X	0.360	9.14	0.051	1.30	3.250	82.55	2.311	58.70	1.388	35.26	10.64	47.33	11.33	1.98
C0360-051-3500-X	0.360	9.14	0.051	1.30	3.500	88.90	2.486	63.15	1.486	37.74	10.64	47.33	10.50	1.84
C0360-055-0440-X	0.360	9.14	0.055	1.40	0.440	11.18	0.351	8.93	0.310	7.87	12.95	57.60	146.27	25.62
C0360-055-0500-X	0.360	9.14	0.055	1.40	0.500	12.70	0.395	10.04	0.337	8.56	12.95	57.60	123.78	21.68
C0360-055-0560-X	0.360	9.14	0.055	1.40	0.560	14.22	0.439	11.16	0.363	9.22	12.95	57.60	107.29	18.79
C0360-055-0620-X	0.360	9.14	0.055	1.40	0.620	15.75	0.483	12.27	0.389	9.88	12.95	57.60	94.63	16.57
C0360-055-0690-X	0.360	9.14	0.055	1.40	0.690	17.53	0.534	13.57	0.420	10.67	12.95	57.60	83.22	14.57
C0360-055-0750-X	0.360	9.14	0.055	1.40	0.750	19.05	0.578	14.69	0.447	11.35	12.95	57.60	75.47	13.22
C0360-055-0810-X	0.360	9.14	0.055	1.40	0.810	20.57	0.622	15.81	0.473	12.01	12.95	57.60	68.97	12.08
C0360-055-0880-X	0.360	9.14	0.055	1.40	0.880	22.35	0.674	17.11	0.504	12.80	12.95	57.60	62.72	10.98
C0360-055-0940-X	0.360	9.14	0.055	1.40	0.940	23.88	0.717	18.22	0.530	13.46	12.95	57.60	58.14	10.17
C0360-055-1000-X	0.360	9.14	0.055	1.40	1.000	25.40	0.761	19.34	0.557	14.15	12.95	57.60	54.23	9.49
C0360-055-1120-X	0.360	9.14	0.055	1.40	1.120	28.45	0.849	21.57	0.609	15.47	12.95	57.60	47.81	8.37

FOR INFORMATION ON ALTERNATIVE FINISHES, SEE PAGE 311

Part Numbers with an "*" are squared and not ground.

316 STAINLESS STEEL

Catalog #	Outside Diameter (OD)		Wire Diameter (d)		Free Length (L) Approx		Load Length (L_1)		Solid Height (Sh) Approx		Load (P) at L_1		Spring Rate (R)	
	in	mm	in	mm	in	mm	in	mm	in	mm	lb	N	lb/in	N/mm
C0360-055-1250-X	0.360	9.14	0.055	1.40	1.250	31.75	0.944	23.98	0.667	16.94	12.95	57.60	42.32	7.41
C0360-055-1380-X	0.360	9.14	0.055	1.40	1.380	35.05	1.039	26.39	0.724	18.39	12.95	57.60	37.98	6.65
C0360-055-1500-X	0.360	9.14	0.055	1.40	1.500	38.10	1.127	28.63	0.777	19.74	12.95	57.60	34.74	6.08
C0360-055-1750-X	0.360	9.14	0.055	1.40	1.750	44.45	1.310	33.27	0.887	22.53	12.95	57.60	29.40	5.15
C0360-055-2000-X	0.360	9.14	0.055	1.40	2.000	50.80	1.494	37.94	0.997	25.32	12.95	57.60	25.57	4.48
C0360-055-2250-X	0.360	9.14	0.055	1.40	2.250	57.15	1.676	42.58	1.107	28.12	12.95	57.60	22.57	3.96
C0360-055-2500-X	0.360	9.14	0.055	1.40	2.500	63.50	1.858	47.19	1.217	30.91	12.95	57.60	20.16	3.54
C0360-055-2750-X	0.360	9.14	0.055	1.40	2.750	69.85	2.043	51.90	1.327	33.71	12.95	57.60	18.33	3.20
C0360-055-3000-X	0.360	9.14	0.055	1.40	3.000	76.20	2.227	56.56	1.437	36.50	12.95	57.60	16.74	2.92
C0360-055-3250-X	0.360	9.14	0.055	1.40	3.250	82.55	2.410	61.21	1.547	39.29	12.95	57.60	15.41	2.70
C0360-055-3500-X	0.360	9.14	0.055	1.40	3.500	88.90	2.591	65.81	1.657	42.09	12.95	57.60	14.24	2.49
C0360-059-0440-X	0.360	9.14	0.059	1.50	0.440	11.18	0.360	9.14	0.321	8.15	15.85	70.50	198.25	34.73
C0360-059-0500-X	0.360	9.14	0.059	1.50	0.500	12.70	0.405	10.29	0.356	9.04	15.85	70.50	167.10	29.26
C0360-059-0560-X	0.360	9.14	0.059	1.50	0.560	14.22	0.450	11.44	0.388	9.86	15.85	70.50	144.44	25.29
C0360-059-0620-X	0.360	9.14	0.059	1.50	0.620	15.75	0.495	12.58	0.421	10.69	15.85	70.50	127.20	22.28
C0360-059-0690-X	0.360	9.14	0.059	1.50	0.690	17.53	0.548	13.92	0.458	11.63	15.85	70.50	111.62	19.54
C0360-059-0750-X	0.360	9.14	0.059	1.50	0.750	19.05	0.593	15.06	0.488	12.40	15.85	70.50	101.04	17.69
C0360-059-0810-X	0.360	9.14	0.059	1.50	0.810	20.57	0.638	16.21	0.517	13.13	15.85	70.50	92.30	16.16
C0360-059-0880-X	0.360	9.14	0.059	1.50	0.880	22.35	0.691	17.55	0.552	14.02	15.85	70.50	83.80	14.68
C0360-059-0940-X	0.360	9.14	0.059	1.50	0.940	23.88	0.736	18.69	0.581	14.76	15.85	70.50	77.64	13.59
C0360-059-1000-X	0.360	9.14	0.059	1.50	1.000	25.40	0.781	19.84	0.611	15.52	15.85	70.50	72.39	12.68
C0360-059-1120-X	0.360	9.14	0.059	1.50	1.120	28.45	0.871	22.13	0.670	17.02	15.85	70.50	63.72	11.16
C0360-059-1250-X	0.360	9.14	0.059	1.50	1.250	31.75	0.969	24.61	0.734	18.64	15.85	70.50	56.39	9.88
C0360-059-1380-X	0.360	9.14	0.059	1.50	1.380	35.05	1.066	27.09	0.797	20.24	15.85	70.50	50.56	8.86
C0360-059-1500-X	0.360	9.14	0.059	1.50	1.500	38.10	1.157	29.39	0.856	21.74	15.85	70.50	46.23	8.09
C0360-059-1750-X	0.360	9.14	0.059	1.50	1.750	44.45	1.345	34.16	0.979	24.87	15.85	70.50	39.15	6.86
C0360-059-2000-X	0.360	9.14	0.059	1.50	2.000	50.80	1.532	38.92	1.102	27.99	15.85	70.50	33.90	5.94
C0360-059-2250-X	0.360	9.14	0.059	1.50	2.250	57.15	1.721	43.72	1.225	31.12	15.85	70.50	29.99	5.25
C0360-059-2500-X	0.360	9.14	0.059	1.50	2.500	63.50	1.909	48.49	1.348	34.24	15.85	70.50	26.82	4.69
C0360-059-2750-X	0.360	9.14	0.059	1.50	2.750	69.85	2.096	53.24	1.471	37.36	15.85	70.50	24.24	4.24
C0360-059-3000-X	0.360	9.14	0.059	1.50	3.000	76.20	2.284	58.03	1.594	40.49	15.85	70.50	22.16	3.89
C0360-059-3250-X	0.360	9.14	0.059	1.50	3.250	82.55	2.473	62.82	1.717	43.61	15.85	70.50	20.41	3.57
C0360-059-3500-X	0.360	9.14	0.059	1.50	3.500	88.90	2.662	67.60	1.840	46.74	15.85	70.50	18.91	3.31
D22150X	0.364	9.25	0.049	1.25	0.591	15.00	0.471	11.97	0.271	6.88	160.98	36.19	68.12	11.93
D22160X	0.364	9.25	0.049	1.25	0.866	22.00	0.674	17.13	0.369	9.38	160.98	36.19	42.43	7.43
D22170X	0.364	9.25	0.049	1.25	1.299	33.00	1.006	25.55	0.517	13.13	160.98	36.19	27.75	4.86
D22180X	0.364	9.25	0.049	1.25	1.870	47.50	1.438	36.53	0.714	18.13	160.98	36.19	18.84	3.30
D22190X	0.364	9.25	0.049	1.25	2.717	69.00	2.080	52.84	1.009	25.63	160.98	36.19	12.79	2.24
D22350X	0.378	9.60	0.063	1.60	0.571	14.50	0.483	12.26	0.346	8.80	308.71	69.40	177.30	31.05
D22360X	0.378	9.60	0.063	1.60	0.846	21.50	0.708	17.99	0.472	12.00	308.71	69.40	112.89	19.77
D22370X	0.378	9.60	0.063	1.60	1.240	31.50	1.027	26.09	0.661	16.80	308.71	69.40	73.26	12.83
D22380X	0.378	9.60	0.063	1.60	1.772	45.00	1.456	36.99	0.913	23.20	308.71	69.40	49.45	8.66
D22390X	0.378	9.60	0.063	1.60	2.579	65.50	2.113	53.68	1.291	32.80	308.71	69.40	33.52	5.87
C0390-043-0500-X	0.390	9.91	0.043	1.09	0.500	12.70	0.337	8.57	0.241	6.12	6.14	27.31	37.73	6.60
C0390-043-0560-X	0.390	9.91	0.043	1.09	0.560	14.22	0.374	9.50	0.257	6.53	6.14	27.31	32.99	5.78
C0390-043-0620-X	0.390	9.91	0.043	1.09	0.620	15.75	0.410	10.42	0.273	6.93	6.14	27.31	29.24	5.11
C0390-043-0690-X	0.390	9.91	0.043	1.09	0.690	17.53	0.452	11.49	0.292	7.42	6.14	27.31	25.82	4.52
C0390-043-0750-X	0.390	9.91	0.043	1.09	0.750	19.05	0.489	12.42	0.308	7.82	6.14	27.31	23.49	4.12
C0390-043-0810-X	0.390	9.91	0.043	1.09	0.810	20.57	0.526	13.35	0.324	8.23	6.14	27.31	21.57	3.78
C0390-043-0880-X	0.390	9.91	0.043	1.09	0.880	22.35	0.568	14.42	0.343	8.71	6.14	27.31	19.66	3.45
C0390-043-0940-X	0.390	9.91	0.043	1.09	0.940	23.88	0.607	15.41	0.359	9.12	6.14	27.31	18.41	3.22
C0390-043-1000-X	0.390	9.91	0.043	1.09	1.000	25.40	0.641	16.27	0.376	9.55	6.14	27.31	17.08	2.99
C0390-043-1120-X	0.390	9.91	0.043	1.09	1.120	28.45	0.713	18.11	0.408	10.36	6.14	27.31	15.08	2.64
C0390-043-1250-X	0.390	9.91	0.043	1.09	1.250	31.75	0.792	20.13	0.443	11.25	6.14	27.31	13.41	2.35
C0390-043-1380-X	0.390	9.91	0.043	1.09	1.380	35.05	0.872	22.15	0.478	12.14	6.14	27.31	12.08	2.12
C0390-043-1500-X	0.390	9.91	0.043	1.09	1.500	38.10	0.946	24.03	0.510	12.95	6.14	27.31	11.08	1.94
C0390-043-1750-X	0.390	9.91	0.043	1.09	1.750	44.45	1.098	27.89	0.578	14.68	6.14	27.31	9.41	1.65
C0390-043-2000-X	0.390	9.91	0.043	1.09	2.000	50.80	1.248	31.71	0.645	16.38	6.14	27.31	8.16	1.44
C0390-047-0500-X	0.390	9.91	0.047	1.19	0.500	12.70	0.349	8.86	0.270	6.86	7.96	35.41	52.73	9.23
C0390-047-0560-X	0.390	9.91	0.047	1.19	0.560	14.22	0.387	9.82	0.289	7.34	7.96	35.41	45.98	8.06
C0390-047-0620-X	0.390	9.91	0.047	1.19	0.620	15.75	0.424	10.78	0.308	7.82	7.96	35.41	40.73	7.13
C0390-047-0690-X	0.390	9.91	0.047	1.19	0.690	17.53	0.468	11.89	0.330	8.38	7.96	35.41	35.90	6.29
C0390-047-0750-X	0.390	9.91	0.047	1.19	0.750	19.05	0.506	12.86	0.350	8.89	7.96	35.41	32.65	5.73
C0390-047-0810-X	0.390	9.91	0.047	1.19	0.810	20.57	0.544	13.81	0.369	9.37	7.96	35.41	29.90	5.24

SPEC TO ORDER: WWW.ASRAYMOND.COM OR SEE PHONE & FAX NUMBERS ON THE BACK COVER

Part Numbers with an "*" are squared and not ground.

316 STAINLESS STEEL

Catalog #	Outside Diameter (OD)		Wire Diameter (d)		Free Length (L) Approx		Load Length (L_1)		Solid Height (Sh) Approx		Load (P) at L_1		Spring Rate (R)	
	in	mm	in	mm	in	mm	in	mm	in	mm	lb	N	lb/in	N/mm
C0390-047-0880-X	0.390	9.91	0.047	1.19	0.880	22.35	0.588	14.93	0.391	9.93	7.96	35.41	27.24	4.76
C0390-047-0940-X	0.390	9.91	0.047	1.19	0.940	23.88	0.626	15.89	0.410	10.41	7.96	35.41	25.32	4.43
C0390-047-1000-X	0.390	9.91	0.047	1.19	1.000	25.40	0.663	16.85	0.429	10.90	7.96	35.41	23.66	4.15
C0390-047-1120-X	0.390	9.91	0.047	1.19	1.120	28.45	0.739	18.77	0.467	11.86	7.96	35.41	20.91	3.66
C0390-047-1250-X	0.390	9.91	0.047	1.19	1.250	31.75	0.819	20.81	0.508	12.90	7.96	35.41	18.49	3.24
C0390-047-1380-X	0.390	9.91	0.047	1.19	1.380	35.05	0.902	22.91	0.550	13.97	7.96	35.41	16.66	2.92
C0390-047-1500-X	0.390	9.91	0.047	1.19	1.500	38.10	0.978	24.83	0.588	14.94	7.96	35.41	15.24	2.66
C0390-047-1750-X	0.390	9.91	0.047	1.19	1.750	44.45	1.133	28.78	0.667	16.94	7.96	35.41	12.91	2.26
C0390-047-2000-X	0.390	9.91	0.047	1.19	2.000	50.80	1.292	32.81	0.747	18.97	7.96	35.41	11.25	1.98
C0420-035-0500-X	0.420	10.67	0.035	0.89	0.500	12.70	0.306	7.77	0.172	4.37	3.19	14.19	16.41	2.87
C0420-035-0620-X	0.420	10.67	0.035	0.89	0.620	15.75	0.372	9.44	0.191	4.85	3.19	14.19	12.83	2.24
C0420-035-0750-X	0.420	10.67	0.035	0.89	0.750	19.05	0.444	11.28	0.211	5.36	3.19	14.19	10.41	1.82
C0420-035-0880-X	0.420	10.67	0.035	0.89	0.880	22.35	0.516	13.10	0.231	5.87	3.19	14.19	8.75	1.54
C0420-035-1000-X	0.420	10.67	0.035	0.89	1.000	25.40	0.580	14.73	0.250	6.35	3.19	14.19	7.58	1.33
C0420-035-1250-X	0.420	10.67	0.035	0.89	1.250	31.75	0.719	18.26	0.289	7.34	3.19	14.19	6.00	1.05
C0420-035-1500-X	0.420	10.67	0.035	0.89	1.500	38.10	0.852	21.64	0.328	8.33	3.19	14.19	4.91	0.86
C0420-035-1750-X	0.420	10.67	0.035	0.89	1.750	44.45	1.000	25.40	0.367	9.32	3.19	14.19	4.25	0.75
C0420-038-0500-X	0.420	10.67	0.038	0.97	0.500	12.70	0.278	7.07	0.172	4.37	4.06	18.06	18.33	3.20
C0420-038-0560-X	0.420	10.67	0.038	0.97	0.560	14.22	0.316	8.03	0.186	4.72	4.06	18.06	16.66	2.92
C0420-038-0625-X	0.420	10.67	0.038	0.97	0.620	15.75	0.349	8.87	0.194	4.93	4.06	18.06	14.99	2.63
C0420-038-0750-X	0.420	10.67	0.038	0.97	0.750	19.05	0.414	10.51	0.223	5.66	4.06	18.06	12.08	2.12
C0420-038-0880-X	0.420	10.67	0.038	0.97	0.880	22.35	0.490	12.44	0.246	6.25	4.06	18.06	10.41	1.82
C0420-038-1000-X	0.420	10.67	0.038	0.97	1.000	25.40	0.557	14.14	0.269	6.83	4.06	18.06	9.16	1.61
C0420-038-1250-X	0.420	10.67	0.038	0.97	1.250	31.75	0.676	17.18	0.326	8.28	4.06	18.06	7.08	1.24
C0420-038-1500-X	0.420	10.67	0.038	0.97	1.500	38.10	0.823	20.90	0.372	9.45	4.06	18.06	6.00	1.05
C0420-038-1750-X	0.420	10.67	0.038	0.97	1.750	44.45	1.011	25.68	0.423	10.74	4.06	18.06	5.50	0.96
C0420-038-2000-X	0.420	10.67	0.038	0.97	2.000	50.80	1.201	30.50	0.456	11.58	4.06	18.06	5.08	0.89
C0420-038-2250-X	0.420	10.67	0.038	0.97	2.250	57.15	1.347	34.21	0.494	12.55	4.06	18.06	4.50	0.79
C0420-038-2500-X	0.420	10.67	0.038	0.97	2.500	63.50	1.484	37.70	0.532	13.51	4.06	18.06	4.00	0.70
C0420-042-0500-X	0.420	10.67	0.042	1.07	0.500	12.70	0.311	7.91	0.190	4.83	5.34	23.75	28.32	4.96
C0420-042-0560-X	0.420	10.67	0.042	1.07	0.560	14.22	0.353	8.97	0.201	5.11	5.34	23.75	25.82	4.52
C0420-042-0625-X	0.420	10.67	0.042	1.07	0.620	15.75	0.391	9.93	0.213	5.41	5.34	23.75	23.32	4.08
C0420-042-0750-X	0.420	10.67	0.042	1.07	0.750	19.05	0.459	11.65	0.248	6.30	5.34	23.75	18.33	3.20
C0420-042-0880-X	0.420	10.67	0.042	1.07	0.880	22.35	0.533	13.55	0.280	7.11	5.34	23.75	15.41	2.70
C0420-042-1000-X	0.420	10.67	0.042	1.07	1.000	25.40	0.599	15.22	0.310	7.87	5.34	23.75	13.33	2.33
C0420-042-1250-X	0.420	10.67	0.042	1.07	1.250	31.75	0.757	19.22	0.363	9.22	5.34	23.75	10.83	1.89
C0420-042-1500-X	0.420	10.67	0.042	1.07	1.500	38.10	0.889	22.59	0.429	10.90	5.34	23.75	8.75	1.54
C0420-042-1750-X	0.420	10.67	0.042	1.07	1.750	44.45	1.061	26.94	0.501	12.73	5.34	23.75	7.75	1.37
C0420-042-2000-X	0.420	10.67	0.042	1.07	2.000	50.80	1.209	30.70	0.558	14.17	5.34	23.75	6.75	1.19
C0420-042-2250-X	0.420	10.67	0.042	1.07	2.250	57.15	1.417	36.00	0.592	15.04	5.34	23.75	6.41	1.12
C0420-042-2500-X	0.420	10.67	0.042	1.07	2.500	63.50	1.571	39.90	0.630	16.00	5.34	23.75	5.75	1.02
C0420-045-0500-X	0.420	10.67	0.045	1.14	0.500	12.70	0.313	7.95	0.214	5.44	6.54	29.09	34.99	6.13
C0420-045-0625-X	0.420	10.67	0.045	1.14	0.620	15.75	0.389	9.88	0.244	6.20	6.54	29.09	28.32	4.96
C0420-045-0750-X	0.420	10.67	0.045	1.14	0.750	19.05	0.459	11.66	0.284	7.21	6.54	29.09	22.49	3.94
C0420-045-0880-X	0.420	10.67	0.045	1.14	0.880	22.35	0.539	13.68	0.318	8.08	6.54	29.09	19.16	3.36
C0420-045-1000-X	0.420	10.67	0.045	1.14	1.000	25.40	0.607	15.43	0.352	8.94	6.54	29.09	16.66	2.92
C0420-045-1250-X	0.420	10.67	0.045	1.14	1.250	31.75	0.759	19.28	0.418	10.62	6.54	29.09	13.33	2.33
C0420-045-1500-X	0.420	10.67	0.045	1.14	1.500	38.10	0.896	22.76	0.493	12.52	6.54	29.09	10.83	1.89
C0420-045-1750-X	0.420	10.67	0.045	1.14	1.750	44.45	1.084	27.55	0.563	14.30	6.54	29.09	9.83	1.72
C0420-045-2000-X	0.420	10.67	0.045	1.14	2.000	50.80	1.230	31.24	0.627	15.93	6.54	29.09	8.50	1.49
C0420-045-2250-X	0.420	10.67	0.045	1.14	2.250	57.15	1.377	34.99	0.691	17.55	6.54	29.09	7.50	1.31
C0420-045-2500-X	0.420	10.67	0.045	1.14	2.500	63.50	1.530	38.87	0.756	19.20	6.54	29.09	6.75	1.19
C0420-048-0500-X	0.420	10.67	0.048	1.22	0.500	12.70	0.347	8.81	0.261	6.63	7.73	34.38	50.48	8.84
C0420-048-0750-X	0.420	10.67	0.048	1.22	0.750	19.05	0.502	12.74	0.334	8.48	7.73	34.38	31.15	5.46
C0420-048-1000-X	0.420	10.67	0.048	1.22	1.000	25.40	0.657	16.70	0.407	10.34	7.73	34.38	22.57	3.96
C0420-048-1250-X	0.420	10.67	0.048	1.22	1.250	31.75	0.812	20.62	0.480	12.19	7.73	34.38	17.66	3.10
C0420-048-1500-X	0.420	10.67	0.048	1.22	1.500	38.10	0.966	24.55	0.552	14.02	7.73	34.38	14.49	2.54
C0420-048-1750-X	0.420	10.67	0.048	1.22	1.750	44.45	1.123	28.51	0.625	15.88	7.73	34.38	12.33	2.15
C0420-048-2000-X	0.420	10.67	0.048	1.22	2.000	50.80	1.280	32.52	0.698	17.73	7.73	34.38	10.75	1.89
C0420-051-0500-X	0.420	10.67	0.051	1.30	0.500	12.70	0.355	9.01	0.282	7.16	9.24	41.10	63.64	11.14
C0420-051-0620-X	0.420	10.67	0.051	1.30	0.620	15.75	0.431	10.95	0.321	8.15	9.24	41.10	48.90	8.56
C0420-051-0750-X	0.420	10.67	0.051	1.30	0.750	19.05	0.514	13.04	0.363	9.22	9.24	41.10	39.07	6.85
C0420-051-0880-X	0.420	10.67	0.051	1.30	0.880	22.35	0.596	15.15	0.406	10.31	9.24	41.10	32.57	5.71
C0420-051-1000-X	0.420	10.67	0.051	1.30	1.000	25.40	0.673	17.09	0.445	11.30	9.24	41.10	28.24	4.94

FOR INFORMATION ON ALTERNATIVE FINISHES, SEE PAGE 311

Part Numbers with an "*" are squared and not ground.

316 STAINLESS STEEL

Catalog #	Outside Diameter (OD)		Wire Diameter (d)		Free Length (L) Approx		Load Length (L_1)		Solid Height (Sh) Approx		Load (P) at L_1		Spring Rate (R)	
	in	mm	in	mm	in	mm	in	mm	in	mm	lb	N	lb/in	N/mm
C0420-051-1250-X	0.420	10.67	0.051	1.30	1.250	31.75	0.832	21.12	0.526	13.36	9.24	41.10	22.07	3.87
C0420-051-1500-X	0.420	10.67	0.051	1.30	1.500	38.10	0.989	25.12	0.607	15.42	9.24	41.10	18.08	3.17
C0420-051-1750-X	0.420	10.67	0.051	1.30	1.750	44.45	1.147	29.14	0.688	17.48	9.24	41.10	15.33	2.68
C0420-051-2000-X	0.420	10.67	0.051	1.30	2.000	50.80	1.307	33.19	0.769	19.53	9.24	41.10	13.33	2.33
C0420-051-2250-X	0.420	10.67	0.051	1.30	2.250	57.15	1.469	37.31	0.850	21.59	9.24	41.10	11.83	2.07
C0420-051-2500-X	0.420	10.67	0.051	1.30	2.500	63.50	1.627	41.32	0.932	23.67	9.24	41.10	10.58	1.86
C0420-055-0500-X	0.420	10.67	0.055	1.40	0.500	12.70	0.358	9.09	0.273	6.93	11.26	50.09	79.14	13.85
C0420-055-0625-X	0.420	10.67	0.055	1.40	0.620	15.75	0.440	11.17	0.316	8.03	11.26	50.09	62.48	10.95
C0420-055-0750-X	0.420	10.67	0.055	1.40	0.750	19.05	0.532	13.51	0.360	9.14	11.26	50.09	51.65	9.05
C0420-055-0880-X	0.420	10.67	0.055	1.40	0.880	22.35	0.620	15.75	0.408	10.36	11.26	50.09	43.32	7.58
C0420-055-1000-X	0.420	10.67	0.055	1.40	1.000	25.40	0.700	17.77	0.454	11.53	11.26	50.09	37.49	6.57
C0420-055-1250-X	0.420	10.67	0.055	1.40	1.250	31.75	0.864	21.94	0.553	14.05	11.26	50.09	29.16	5.11
C0420-055-1500-X	0.420	10.67	0.055	1.40	1.500	38.10	1.034	26.26	0.645	16.38	11.26	50.09	24.16	4.24
C0420-055-1750-X	0.420	10.67	0.055	1.40	1.750	44.45	1.198	30.43	0.772	19.61	11.26	50.09	20.41	3.57
C0420-055-2000-X	0.420	10.67	0.055	1.40	2.000	50.80	1.365	34.68	0.865	21.97	11.26	50.09	17.74	3.10
C0420-055-2250-X	0.420	10.67	0.055	1.40	2.250	57.15	1.531	38.88	0.957	24.31	11.26	50.09	15.66	2.75
C0420-055-2500-X	0.420	10.67	0.055	1.40	2.500	63.50	1.695	43.06	1.050	26.67	11.26	50.09	13.99	2.45
C0420-059-0500-X	0.420	10.67	0.059	1.50	0.500	12.70	0.379	9.62	0.322	8.18	13.82	61.47	113.87	19.95
C0420-059-0625-X	0.420	10.67	0.059	1.50	0.620	15.75	0.459	11.66	0.380	9.65	13.82	61.47	85.80	15.03
C0420-059-0750-X	0.420	10.67	0.059	1.50	0.750	19.05	0.549	13.95	0.439	11.15	13.82	61.47	68.81	12.05
C0420-059-0880-X	0.420	10.67	0.059	1.50	0.880	22.35	0.638	16.20	0.496	12.60	13.82	61.47	57.06	10.00
C0420-059-1000-X	0.420	10.67	0.059	1.50	1.000	25.40	0.720	18.28	0.546	13.87	13.82	61.47	49.31	8.63
C0420-059-1250-X	0.420	10.67	0.059	1.50	1.250	31.75	0.890	22.61	0.651	16.54	13.82	61.47	38.40	6.72
C0420-059-1500-X	0.420	10.67	0.059	1.50	1.500	38.10	1.061	26.95	0.755	19.18	13.82	61.47	31.49	5.52
C0420-059-1750-X	0.420	10.67	0.059	1.50	1.750	44.45	1.232	31.28	0.860	21.84	13.82	61.47	26.66	4.68
C0420-059-2000-X	0.420	10.67	0.059	1.50	2.000	50.80	1.401	35.59	0.965	24.51	13.82	61.47	23.07	4.05
C0420-059-2250-X	0.420	10.67	0.059	1.50	2.250	57.15	1.573	39.95	1.069	27.15	13.82	61.47	20.41	3.57
C0420-059-2500-X	0.420	10.67	0.059	1.50	2.500	63.50	1.743	44.26	1.174	29.82	13.82	61.47	18.24	3.19
C0420-063-0500-X	0.420	10.67	0.063	1.60	0.500	12.70	0.392	9.97	0.345	8.76	16.33	72.64	151.69	26.57
C0420-063-0620-X	0.420	10.67	0.063	1.60	0.620	15.75	0.478	12.14	0.416	10.57	16.33	72.64	114.87	20.12
C0420-063-0750-X	0.420	10.67	0.063	1.60	0.750	19.05	0.570	14.49	0.476	12.09	16.33	72.64	90.96	15.94
C0420-063-0880-X	0.420	10.67	0.063	1.60	0.880	22.35	0.663	16.84	0.536	13.61	16.33	72.64	75.22	13.17
C0420-063-1000-X	0.420	10.67	0.063	1.60	1.000	25.40	0.748	19.01	0.591	15.01	16.33	72.64	64.89	11.37
C0420-063-1250-X	0.420	10.67	0.063	1.60	1.250	31.75	0.926	23.53	0.706	17.93	16.33	72.64	50.48	8.84
C0420-063-1500-X	0.420	10.67	0.063	1.60	1.500	38.10	1.105	28.06	0.821	20.85	16.33	72.64	41.32	7.23
C0420-063-1750-X	0.420	10.67	0.063	1.60	1.750	44.45	1.282	32.56	0.937	23.80	16.33	72.64	34.90	6.11
C0420-063-2000-X	0.420	10.67	0.063	1.60	2.000	50.80	1.460	37.08	1.052	26.72	16.33	72.64	30.24	5.29
C0420-063-2250-X	0.420	10.67	0.063	1.60	2.250	57.15	1.639	41.64	1.167	29.64	16.33	72.64	26.74	4.68
C0420-063-2500-X	0.420	10.67	0.063	1.60	2.500	63.50	1.817	46.15	1.282	32.56	16.33	72.64	23.91	4.19
C0420-067-0750-X	0.420	10.67	0.067	1.70	0.750	19.05	0.588	14.93	0.507	12.88	19.51	86.78	120.20	21.05
C0420-067-1000-X	0.420	10.67	0.067	1.70	1.000	25.40	0.772	19.61	0.631	16.03	19.51	86.78	85.55	14.99
C0420-067-1250-X	0.420	10.67	0.067	1.70	1.250	31.75	0.956	24.29	0.755	19.18	19.51	86.78	66.39	11.63
C0420-067-1500-X	0.420	10.67	0.067	1.70	1.500	38.10	1.140	28.96	0.879	22.33	19.51	86.78	54.23	9.49
C0420-067-1750-X	0.420	10.67	0.067	1.70	1.750	44.45	1.324	33.63	1.003	25.48	19.51	86.78	45.82	8.02
C0420-067-2000-X	0.420	10.67	0.067	1.70	2.000	50.80	1.508	38.30	1.127	28.63	19.51	86.78	39.65	6.95
C0420-067-2250-X	0.420	10.67	0.067	1.70	2.250	57.15	1.692	42.98	1.251	31.78	19.51	86.78	34.99	6.13
C0420-067-2500-X	0.420	10.67	0.067	1.70	2.500	63.50	1.877	47.68	1.375	34.93	19.51	86.78	31.32	5.48
C0420-072-1000-X	0.420	10.67	0.072	1.83	1.000	25.40	0.798	20.27	0.690	17.53	23.44	104.27	115.95	20.31
C0420-072-1250-X	0.420	10.67	0.072	1.83	1.250	31.75	0.989	25.11	0.829	21.06	23.44	104.27	89.71	15.71
C0420-072-1500-X	0.420	10.67	0.072	1.83	1.500	38.10	1.180	29.97	0.967	24.56	23.44	104.27	73.22	12.82
C0420-072-1750-X	0.420	10.67	0.072	1.83	1.750	44.45	1.371	34.82	1.105	28.07	23.44	104.27	61.81	10.82
C0420-072-2000-X	0.420	10.67	0.072	1.83	2.000	50.80	1.562	39.67	1.244	31.60	23.44	104.27	53.48	9.37
C0420-072-2250-X	0.420	10.67	0.072	1.83	2.250	57.15	1.753	44.52	1.382	35.10	23.44	104.27	47.15	8.27
C0420-072-2500-X	0.420	10.67	0.072	1.83	2.500	63.50	1.944	49.38	1.521	38.63	23.44	104.27	42.15	7.39
D21800X*	0.425	10.80	0.031	0.80	0.787	20.00	0.444	11.27	0.205	5.20	38.83	8.73	5.71	1.00
D21810X*	0.425	10.80	0.031	0.80	1.181	30.00	0.635	16.14	0.268	6.80	38.83	8.73	3.60	0.63
D21820X*	0.425	10.80	0.031	0.80	1.791	45.50	0.953	24.21	0.362	9.20	38.83	8.73	2.34	0.41
D21830X*	0.425	10.80	0.031	0.80	2.598	66.00	1.326	33.67	0.488	12.40	38.83	8.73	1.54	0.27
D21840X*	0.425	10.80	0.031	0.80	3.799	96.50	1.990	50.55	0.677	17.20	38.83	8.73	1.08	0.19
D22000X	0.433	11.00	0.039	1.00	0.689	17.50	0.423	10.75	0.217	5.50	72.64	16.33	13.82	2.42
D22010X	0.433	11.00	0.039	1.00	1.024	26.00	0.606	15.40	0.295	7.50	72.64	16.33	8.79	1.54
D22020X	0.433	11.00	0.039	1.00	1.535	39.00	0.893	22.67	0.413	10.50	72.64	16.33	5.71	1.00
D22030X	0.433	11.00	0.039	1.00	2.205	56.00	1.245	31.63	0.571	14.50	72.64	16.33	3.83	0.67
D22040X	0.433	11.00	0.039	1.00	3.209	81.50	1.811	46.00	0.807	20.50	72.64	16.33	2.63	0.46

Part Numbers with an "*" are squared and not ground.

316 STAINLESS STEEL

Catalog #	Outside Diameter (OD)		Wire Diameter (d)		Free Length (L) Approx		Load Length (L_1)		Solid Height (Sh) Approx		Load (P) at L_1		Spring Rate (R)	
	in	mm	in	mm	in	mm	in	mm	in	mm	lb	N	lb/in	N/mm
D22850X	0.433	11.00	0.087	2.20	0.638	16.20	0.569	14.46	0.476	12.10	646.37	145.31	475.77	83.32
D22860X	0.433	11.00	0.087	2.20	0.906	23.00	0.798	20.26	0.650	16.50	646.37	145.31	302.30	52.94
D22870X	0.433	11.00	0.087	2.20	1.437	36.50	1.251	31.77	0.996	25.30	646.37	145.31	175.36	30.71
D22880X	0.433	11.00	0.087	2.20	2.236	56.80	1.932	49.07	1.516	38.50	646.37	145.31	107.29	18.79
D22200X	0.443	11.25	0.049	1.25	0.787	20.00	0.586	14.89	0.271	6.88	134.29	30.19	33.75	5.91
D22210X	0.443	11.25	0.049	1.25	1.161	29.50	0.845	21.47	0.369	9.38	134.29	30.19	21.47	3.76
D22220X	0.443	11.25	0.049	1.25	1.752	44.50	1.263	32.08	0.517	13.13	134.29	30.19	13.88	2.43
D22230X	0.443	11.25	0.049	1.25	2.520	64.00	1.804	45.81	0.714	18.13	134.29	30.19	9.48	1.66
D22240X	0.443	11.25	0.049	1.25	3.681	93.50	2.620	66.54	1.009	25.63	134.29	30.19	6.40	1.12
C0455-039-0500-X	0.455	11.56	0.039	0.99	0.500	12.70	0.309	7.86	0.187	4.75	4.06	18.06	21.32	3.73
C0455-039-0620-X	0.455	11.56	0.039	0.99	0.620	15.75	0.375	9.52	0.207	5.26	4.06	18.06	16.58	2.91
C0455-039-0750-X	0.455	11.56	0.039	0.99	0.750	19.05	0.447	11.35	0.229	5.82	4.06	18.06	13.41	2.35
C0455-039-0880-X	0.455	11.56	0.039	0.99	0.880	22.35	0.519	13.17	0.251	6.38	4.06	18.06	11.25	1.98
C0455-039-1000-X	0.455	11.56	0.039	0.99	1.000	25.40	0.583	14.81	0.271	6.88	4.06	18.06	9.75	1.72
C0455-039-1250-X	0.455	11.56	0.039	0.99	1.250	31.75	0.720	18.28	0.312	7.92	4.06	18.06	7.66	1.35
C0455-039-1500-X	0.455	11.56	0.039	0.99	1.500	38.10	0.858	21.80	0.354	8.99	4.06	18.06	6.33	1.10
C0455-039-1750-X	0.455	11.56	0.039	0.99	1.750	44.45	1.000	25.39	0.396	10.06	4.06	18.06	5.41	0.95
C0455-046-0500-X	0.455	11.56	0.046	1.17	0.500	12.70	0.330	8.37	0.233	5.92	6.47	28.78	37.98	6.65
C0455-046-0620-X	0.455	11.56	0.046	1.17	0.620	15.75	0.400	10.16	0.261	6.63	6.47	28.78	29.40	5.15
C0455-046-0750-X	0.455	11.56	0.046	1.17	0.750	19.05	0.475	12.08	0.291	7.39	6.47	28.78	23.57	4.13
C0455-046-0880-X	0.455	11.56	0.046	1.17	0.880	22.35	0.551	13.99	0.321	8.15	6.47	28.78	19.66	3.45
C0455-046-1000-X	0.455	11.56	0.046	1.17	1.000	25.40	0.621	15.77	0.349	8.86	6.47	28.78	17.08	2.99
C0455-046-1250-X	0.455	11.56	0.046	1.17	1.250	31.75	0.767	19.49	0.407	10.34	6.47	28.78	13.41	2.35
C0455-046-1500-X	0.455	11.56	0.046	1.17	1.500	38.10	0.911	23.15	0.465	11.81	6.47	28.78	11.00	1.93
C0455-046-1750-X	0.455	11.56	0.046	1.17	1.750	44.45	1.056	26.83	0.523	13.28	6.47	28.78	9.33	1.63
D22400X	0.457	11.60	0.063	1.60	0.728	18.50	0.583	14.82	0.346	8.80	260.75	58.62	90.96	15.93
D22410X	0.457	11.60	0.063	1.60	1.063	27.00	0.835	21.21	0.472	12.00	260.75	58.62	57.84	10.13
D22420X	0.457	11.60	0.063	1.60	1.594	40.50	1.243	31.56	0.661	16.80	260.75	58.62	37.46	6.56
D22430X	0.457	11.60	0.063	1.60	2.303	58.50	1.783	45.30	0.913	23.20	260.75	58.62	25.35	4.44
D22440X	0.457	11.60	0.063	1.60	3.346	85.00	2.580	65.52	1.291	32.80	260.75	58.62	17.19	3.01
D22600X	0.472	12.00	0.079	2.00	0.709	18.00	0.602	15.30	0.433	11.00	466.08	104.78	221.55	38.80
D22610X	0.472	12.00	0.079	2.00	1.043	26.50	0.877	22.27	0.591	15.00	466.08	104.78	141.33	24.75
D22620X	0.472	12.00	0.079	2.00	1.516	38.50	1.258	31.96	0.827	21.00	466.08	104.78	91.42	16.01
D22630X	0.472	12.00	0.079	2.00	2.165	55.00	1.785	45.35	1.142	29.00	466.08	104.78	62.01	10.86
D22640X	0.472	12.00	0.079	2.00	3.130	79.50	2.568	65.22	1.614	41.00	466.08	104.78	41.91	7.34
C0480-035-0500-X	0.480	12.19	0.035	0.89	0.500	12.70	0.286	7.26	0.160	4.06	2.80	12.46	13.08	2.29
C0480-035-0620-X	0.480	12.19	0.035	0.89	0.620	15.75	0.344	8.74	0.175	4.45	2.80	12.46	10.16	1.79
C0480-035-0750-X	0.480	12.19	0.035	0.89	0.750	19.05	0.410	10.42	0.192	4.88	2.80	12.46	8.25	1.45
C0480-035-0880-X	0.480	12.19	0.035	0.89	0.880	22.35	0.475	12.06	0.208	5.28	2.80	12.46	6.91	1.21
C0480-035-1000-X	0.480	12.19	0.035	0.89	1.000	25.40	0.533	13.53	0.223	5.66	2.80	12.46	6.00	1.05
C0480-035-1250-X	0.480	12.19	0.035	0.89	1.250	31.75	0.660	16.76	0.255	6.48	2.80	12.46	4.75	0.84
C0480-035-1500-X	0.480	12.19	0.035	0.89	1.500	38.10	0.784	19.92	0.287	7.29	2.80	12.46	3.92	0.68
C0480-035-1750-X	0.480	12.19	0.035	0.89	1.750	44.45	0.909	23.09	0.319	8.10	2.80	12.46	3.33	0.58
C0480-035-2000-X	0.480	12.19	0.035	0.89	2.000	50.80	1.039	26.39	0.351	8.92	2.80	12.46	2.92	0.51
C0480-035-2500-X	0.480	12.19	0.035	0.89	2.500	63.50	1.299	32.99	0.414	10.52	2.80	12.46	2.33	0.40
C0480-035-3000-X	0.480	12.19	0.035	0.89	3.000	76.20	1.538	39.05	0.478	12.14	2.80	12.46	1.92	0.33
C0480-038-0500-X	0.480	12.19	0.038	0.97	0.500	12.70	0.285	7.25	0.144	3.66	3.57	15.88	16.66	2.92
C0480-038-0625-X	0.480	12.19	0.038	0.97	0.620	15.75	0.334	8.48	0.167	4.24	3.57	15.88	12.50	2.19
C0480-038-0750-X	0.480	12.19	0.038	0.97	0.750	19.05	0.407	10.33	0.185	4.70	3.57	15.88	10.41	1.82
C0480-038-0880-X	0.480	12.19	0.038	0.97	0.880	22.35	0.471	11.97	0.207	5.26	3.57	15.88	8.75	1.54
C0480-038-1000-X	0.480	12.19	0.038	0.97	1.000	25.40	0.548	13.93	0.220	5.59	3.57	15.88	7.91	1.38
C0480-038-1250-X	0.480	12.19	0.038	0.97	1.250	31.75	0.678	17.22	0.259	6.58	3.57	15.88	6.25	1.10
C0480-038-1500-X	0.480	12.19	0.038	0.97	1.500	38.10	0.785	19.93	0.305	7.75	3.57	15.88	5.00	0.88
C0480-038-1750-X	0.480	12.19	0.038	0.97	1.750	44.45	0.970	24.63	0.352	8.94	3.57	15.88	4.58	0.81
C0480-038-2000-X	0.480	12.19	0.038	0.97	2.000	50.80	1.106	28.09	0.388	9.86	3.57	15.88	4.00	0.70
C0480-038-2250-X	0.480	12.19	0.038	0.97	2.250	57.15	1.337	33.96	0.397	10.08	3.57	15.88	3.92	0.68
C0480-038-2500-X	0.480	12.19	0.038	0.97	2.500	63.50	1.478	37.55	0.429	10.90	3.57	15.88	3.50	0.61
C0480-038-2750-X	0.480	12.19	0.038	0.97	2.750	69.85	1.621	41.16	0.462	11.73	3.57	15.88	3.17	0.56
C0480-038-3000-X	0.480	12.19	0.038	0.97	3.000	76.20	1.774	45.06	0.494	12.55	3.57	15.88	2.92	0.51
C0480-042-0500-X	0.480	12.19	0.042	1.07	0.500	12.70	0.298	7.58	0.167	4.24	4.70	20.91	23.32	4.08
C0480-042-0625-X	0.480	12.19	0.042	1.07	0.620	15.75	0.351	8.92	0.194	4.93	4.70	20.91	17.49	3.06
C0480-042-0750-X	0.480	12.19	0.042	1.07	0.750	19.05	0.436	11.08	0.213	5.41	4.70	20.91	14.99	2.63
C0480-042-0880-X	0.480	12.19	0.042	1.07	0.880	22.35	0.504	12.79	0.239	6.07	4.70	20.91	12.50	2.19
C0480-042-1000-X	0.480	12.19	0.042	1.07	1.000	25.40	0.566	14.37	0.263	6.68	4.70	20.91	10.83	1.89

FOR INFORMATION ON ALTERNATIVE FINISHES, SEE PAGE 311

Part Numbers with an "*" are squared and not ground.

316 STAINLESS STEEL

Catalog #	Outside Diameter (OD)		Wire Diameter (d)		Free Length (L) Approx		Load Length (L_1)		Solid Height (Sh) Approx		Load (P) at L_1		Spring Rate (R)	
	in	mm	in	mm	in	mm	in	mm	in	mm	lb	N	lb/in	N/mm
C0480-042-1250-X	0.480	12.19	0.042	1.07	1.250	31.75	0.685	17.41	0.317	8.05	4.70	20.91	8.33	1.45
C0480-042-1500-X	0.480	12.19	0.042	1.07	1.500	38.10	0.836	21.23	0.358	9.09	4.70	20.91	7.08	1.24
C0480-042-1750-X	0.480	12.19	0.042	1.07	1.750	44.45	1.017	25.82	0.418	10.62	4.70	20.91	6.41	1.12
C0480-042-2000-X	0.480	12.19	0.042	1.07	2.000	50.80	1.157	29.39	0.462	11.73	4.70	20.91	5.58	0.98
C0480-042-2250-X	0.480	12.19	0.042	1.07	2.250	57.15	1.293	32.84	0.505	12.83	4.70	20.91	4.91	0.86
C0480-042-2500-X	0.480	12.19	0.042	1.07	2.500	63.50	1.509	38.34	0.520	13.21	4.70	20.91	4.75	0.84
C0480-042-2750-X	0.480	12.19	0.042	1.07	2.750	69.85	1.643	41.73	0.561	14.25	4.70	20.91	4.25	0.75
C0480-042-3000-X	0.480	12.19	0.042	1.07	3.000	76.20	1.798	45.68	0.602	15.29	4.70	20.91	3.92	0.68
C0480-045-0500-X	0.480	12.19	0.045	1.14	0.500	12.70	0.302	7.68	0.185	4.70	5.77	25.67	29.16	5.11
C0480-045-0625-X	0.480	12.19	0.045	1.14	0.620	15.75	0.373	9.47	0.209	5.31	5.77	25.67	23.32	4.08
C0480-045-0750-X	0.480	12.19	0.045	1.14	0.750	19.05	0.435	11.06	0.242	6.15	5.77	25.67	18.33	3.20
C0480-045-0880-X	0.480	12.19	0.045	1.14	0.880	22.35	0.516	13.10	0.266	6.76	5.77	25.67	15.83	2.77
C0480-045-1000-X	0.480	12.19	0.045	1.14	1.000	25.40	0.593	15.06	0.287	7.29	5.77	25.67	14.16	2.49
C0480-045-1250-X	0.480	12.19	0.045	1.14	1.250	31.75	0.717	18.22	0.348	8.84	5.77	25.67	10.83	1.89
C0480-045-1500-X	0.480	12.19	0.045	1.14	1.500	38.10	0.871	22.11	0.395	10.03	5.77	25.67	9.16	1.61
C0480-045-1750-X	0.480	12.19	0.045	1.14	1.750	44.45	1.029	26.13	0.469	11.91	5.77	25.67	8.00	1.40
C0480-045-2000-X	0.480	12.19	0.045	1.14	2.000	50.80	1.176	29.87	0.520	13.21	5.77	25.67	7.00	1.23
C0480-045-2250-X	0.480	12.19	0.045	1.14	2.250	57.15	1.314	33.39	0.570	14.48	5.77	25.67	6.16	1.09
C0480-045-2500-X	0.480	12.19	0.045	1.14	2.500	63.50	1.451	36.86	0.620	15.75	5.77	25.67	5.50	0.96
C0480-045-2750-X	0.480	12.19	0.045	1.14	2.750	69.85	1.596	40.54	0.671	17.04	5.77	25.67	5.00	0.88
C0480-045-3000-X	0.480	12.19	0.045	1.14	3.000	76.20	1.741	44.23	0.721	18.31	5.77	25.67	4.58	0.81
C0480-051-0500-X	0.480	12.19	0.051	1.30	0.500	12.70	0.340	8.64	0.255	6.48	8.16	36.30	51.06	8.95
C0480-051-0620-X	0.480	12.19	0.051	1.30	0.620	15.75	0.412	10.47	0.286	7.26	8.16	36.30	39.23	6.86
C0480-051-0750-X	0.480	12.19	0.051	1.30	0.750	19.05	0.490	12.45	0.320	8.13	8.16	36.30	31.40	5.50
C0480-051-0880-X	0.480	12.19	0.051	1.30	0.880	22.35	0.568	14.43	0.353	8.97	8.16	36.30	26.16	4.59
C0480-051-1000-X	0.480	12.19	0.051	1.30	1.000	25.40	0.640	16.26	0.384	9.75	8.16	36.30	22.66	3.98
C0480-051-1250-X	0.480	12.19	0.051	1.30	1.250	31.75	0.790	20.07	0.448	11.38	8.16	36.30	17.74	3.10
C0480-051-1500-X	0.480	12.19	0.051	1.30	1.500	38.10	0.941	23.89	0.513	13.03	8.16	36.30	14.58	2.56
C0480-051-1750-X	0.480	12.19	0.051	1.30	1.750	44.45	1.088	27.65	0.577	14.66	8.16	36.30	12.33	2.15
C0480-051-2000-X	0.480	12.19	0.051	1.30	2.000	50.80	1.241	31.52	0.641	16.28	8.16	36.30	10.75	1.89
C0480-051-2250-X	0.480	12.19	0.051	1.30	2.250	57.15	1.391	35.34	0.706	17.93	8.16	36.30	9.50	1.66
C0480-051-2500-X	0.480	12.19	0.051	1.30	2.500	63.50	1.540	39.12	0.770	19.56	8.16	36.30	8.50	1.49
C0480-051-2750-X	0.480	12.19	0.051	1.30	2.750	69.85	1.686	42.82	0.834	21.18	8.16	36.30	7.66	1.35
C0480-051-3000-X	0.480	12.19	0.051	1.30	3.000	76.20	1.834	46.59	0.899	22.83	8.16	36.30	7.00	1.23
C0480-055-0500-X	0.480	12.19	0.055	1.40	0.500	12.70	0.334	8.48	0.246	6.25	9.95	44.26	59.98	10.51
C0480-055-0625-X	0.480	12.19	0.055	1.40	0.620	15.75	0.407	10.33	0.285	7.24	9.95	44.26	46.65	8.18
C0480-055-0750-X	0.480	12.19	0.055	1.40	0.750	19.05	0.496	12.59	0.319	8.10	9.95	44.26	39.15	6.86
C0480-055-0880-X	0.480	12.19	0.055	1.40	0.880	22.35	0.566	14.36	0.368	9.35	9.95	44.26	31.65	5.55
C0480-055-1000-X	0.480	12.19	0.055	1.40	1.000	25.40	0.659	16.73	0.391	9.93	9.95	44.26	29.16	5.11
C0480-055-1250-X	0.480	12.19	0.055	1.40	1.250	31.75	0.807	20.51	0.474	12.04	9.95	44.26	22.49	3.94
C0480-055-1500-X	0.480	12.19	0.055	1.40	1.500	38.10	0.957	24.30	0.557	14.15	9.95	44.26	18.33	3.20
C0480-055-1750-X	0.480	12.19	0.055	1.40	1.750	44.45	1.134	28.80	0.651	16.54	9.95	44.26	16.16	2.84
C0480-055-2000-X	0.480	12.19	0.055	1.40	2.000	50.80	1.289	32.73	0.725	18.42	9.95	44.26	13.99	2.45
C0480-055-2250-X	0.480	12.19	0.055	1.40	2.250	57.15	1.448	36.78	0.799	20.29	9.95	44.26	12.41	2.17
C0480-055-2500-X	0.480	12.19	0.055	1.40	2.500	63.50	1.602	40.68	0.874	22.20	9.95	44.26	11.08	1.94
C0480-055-2750-X	0.480	12.19	0.055	1.40	2.750	69.85	1.802	45.76	0.911	23.14	9.95	44.26	10.50	1.84
C0480-055-3000-X	0.480	12.19	0.055	1.40	3.000	76.20	1.961	49.81	0.981	24.92	9.95	44.26	9.58	1.68
C0480-059-0500-X	0.480	12.19	0.059	1.50	0.500	12.70	0.363	9.22	0.305	7.75	12.23	54.40	89.30	15.64
C0480-059-0620-X	0.480	12.19	0.059	1.50	0.620	15.75	0.440	11.18	0.346	8.79	12.23	54.40	67.97	11.91
C0480-059-0750-X	0.480	12.19	0.059	1.50	0.750	19.05	0.524	13.30	0.390	9.91	12.23	54.40	53.98	9.46
C0480-059-1000-X	0.480	12.19	0.059	1.50	1.000	25.40	0.684	17.37	0.474	12.04	12.23	54.40	38.65	6.78
C0480-059-1250-X	0.480	12.19	0.059	1.50	1.250	31.75	0.845	21.45	0.558	14.17	12.23	54.40	30.15	5.29
C0480-059-1500-X	0.480	12.19	0.059	1.50	1.500	38.10	1.004	25.51	0.642	16.31	12.23	54.40	24.66	4.33
C0480-059-1750-X	0.480	12.19	0.059	1.50	1.750	44.45	1.165	29.60	0.726	18.44	12.23	54.40	20.91	3.66
C0480-059-2000-X	0.480	12.19	0.059	1.50	2.000	50.80	1.327	33.70	0.810	20.57	12.23	54.40	18.16	3.19
C0480-059-2250-X	0.480	12.19	0.059	1.50	2.250	57.15	1.486	37.73	0.894	22.71	12.23	54.40	15.99	2.80
C0480-059-2500-X	0.480	12.19	0.059	1.50	2.500	63.50	1.647	41.83	0.978	24.84	12.23	54.40	14.33	2.50
C0480-059-2750-X	0.480	12.19	0.059	1.50	2.750	69.85	1.809	45.95	1.062	26.97	12.23	54.40	12.99	2.28
C0480-059-3000-X	0.480	12.19	0.059	1.50	3.000	76.20	1.966	49.95	1.146	29.11	12.23	54.40	11.83	2.07
C0480-063-0500-X	0.480	12.19	0.063	1.60	0.500	12.70	0.355	9.02	0.296	7.52	14.47	64.37	99.96	17.51
C0480-063-0625-X	0.480	12.19	0.063	1.60	0.620	15.75	0.437	11.10	0.342	8.69	14.47	64.37	79.14	13.85
C0480-063-0750-X	0.480	12.19	0.063	1.60	0.750	19.05	0.527	13.39	0.388	9.86	14.47	64.37	64.97	11.38
C0480-063-0880-X	0.480	12.19	0.063	1.60	0.880	22.35	0.617	15.67	0.436	11.07	14.47	64.37	54.98	9.63
C0480-063-1000-X	0.480	12.19	0.063	1.60	1.000	25.40	0.695	17.66	0.485	12.32	14.47	64.37	47.48	8.32

Part Numbers with an "*" are squared and not ground.

316 STAINLESS STEEL

Catalog #	Outside Diameter (OD)		Wire Diameter (d)		Free Length (L) Approx		Load Length (L_1)		Solid Height (Sh) Approx		Load (P) at L_1		Spring Rate (R)	
	in	mm	in	mm	in	mm	in	mm	in	mm	lb	N	lb/in	N/mm
C0480-063-1250-X	0.480	12.19	0.063	1.60	1.250	31.75	0.864	21.94	0.582	14.78	14.47	64.37	37.49	6.57
C0480-063-1380-X	0.480	12.19	0.063	1.60	1.380	35.05	0.973	24.72	0.655	16.64	14.47	64.37	35.57	6.23
C0480-063-1500-X	0.480	12.19	0.063	1.60	1.500	38.10	1.043	26.49	0.665	16.89	14.47	64.37	31.65	5.55
C0480-063-1750-X	0.480	12.19	0.063	1.60	1.750	44.45	1.210	30.75	0.801	20.35	14.47	64.37	26.82	4.69
C0480-063-2000-X	0.480	12.19	0.063	1.60	2.000	50.80	1.377	34.98	0.895	22.73	14.47	64.37	23.24	4.06
C0480-063-2250-X	0.480	12.19	0.063	1.60	2.250	57.15	1.544	39.21	0.989	25.12	14.47	64.37	20.49	3.59
C0480-063-2500-X	0.480	12.19	0.063	1.60	2.500	63.50	1.710	43.44	1.083	27.51	14.47	64.37	18.33	3.20
C0480-063-2750-X	0.480	12.19	0.063	1.60	2.750	69.85	1.877	47.68	1.177	29.90	14.47	64.37	16.58	2.91
C0480-063-3000-X	0.480	12.19	0.063	1.60	3.000	76.20	2.045	51.96	1.271	32.28	14.47	64.37	15.16	2.66
C0480-067-0500-X	0.480	12.19	0.067	1.70	0.500	12.70	0.385	9.78	0.336	8.53	17.31	77.00	150.52	26.36
C0480-067-0620-X	0.480	12.19	0.067	1.70	0.620	15.75	0.467	11.87	0.403	10.24	17.31	77.00	113.37	19.86
C0480-067-0750-X	0.480	12.19	0.067	1.70	0.750	19.05	0.556	14.13	0.458	11.63	17.31	77.00	89.46	15.67
C0480-067-0880-X	0.480	12.19	0.067	1.70	0.880	22.35	0.646	16.40	0.512	13.00	17.31	77.00	73.89	12.94
C0480-067-1000-X	0.480	12.19	0.067	1.70	1.000	25.40	0.728	18.49	0.562	14.27	17.31	77.00	63.64	11.14
C0480-067-1250-X	0.480	12.19	0.067	1.70	1.250	31.75	0.900	22.85	0.666	16.92	17.31	77.00	49.40	8.65
C0480-067-1500-X	0.480	12.19	0.067	1.70	1.500	38.10	1.071	27.19	0.770	19.56	17.31	77.00	40.32	7.06
C0480-067-1750-X	0.480	12.19	0.067	1.70	1.750	44.45	1.242	31.54	0.874	22.20	17.31	77.00	34.07	5.97
C0480-067-2000-X	0.480	12.19	0.067	1.70	2.000	50.80	1.413	35.89	0.978	24.84	17.31	77.00	29.49	5.17
C0480-067-2250-X	0.480	12.19	0.067	1.70	2.250	57.15	1.586	40.28	1.082	27.48	17.31	77.00	26.07	4.57
C0480-067-2500-X	0.480	12.19	0.067	1.70	2.500	63.50	1.758	44.65	1.187	30.15	17.31	77.00	23.32	4.08
C0480-067-2750-X	0.480	12.19	0.067	1.70	2.750	69.85	1.929	48.99	1.291	32.79	17.31	77.00	21.07	3.70
C0480-067-3000-X	0.480	12.19	0.067	1.70	3.000	76.20	2.100	53.35	1.395	35.43	17.31	77.00	19.24	3.36
C0480-072-0500-X	0.480	12.19	0.072	1.83	0.500	12.70	0.402	10.21	0.358	9.09	20.84	92.70	212.91	37.28
C0480-072-0620-X	0.480	12.19	0.072	1.83	0.620	15.75	0.489	12.43	0.419	10.64	20.84	92.70	159.27	27.90
C0480-072-0750-X	0.480	12.19	0.072	1.83	0.750	19.05	0.583	14.82	0.485	12.32	20.84	92.70	125.12	21.91
C0480-072-0880-X	0.480	12.19	0.072	1.83	0.880	22.35	0.678	17.22	0.547	13.89	20.84	92.70	103.04	18.04
C0480-072-1000-X	0.480	12.19	0.072	1.83	1.000	25.40	0.765	19.42	0.601	15.27	20.84	92.70	88.55	15.52
C0480-072-1250-X	0.480	12.19	0.072	1.83	1.250	31.75	0.946	24.03	0.714	18.14	20.84	92.70	68.56	12.01
C0480-072-1500-X	0.480	12.19	0.072	1.83	1.500	38.10	1.127	28.63	0.826	20.98	20.84	92.70	55.89	9.79
C0480-072-1750-X	0.480	12.19	0.072	1.83	1.750	44.45	1.309	33.24	0.939	23.85	20.84	92.70	47.23	8.27
C0480-072-2000-X	0.480	12.19	0.072	1.83	2.000	50.80	1.490	37.83	1.051	26.70	20.84	92.70	40.82	7.15
C0480-072-2250-X	0.480	12.19	0.072	1.83	2.250	57.15	1.671	42.44	1.164	29.57	20.84	92.70	35.99	6.30
C0480-072-2500-X	0.480	12.19	0.072	1.83	2.500	63.50	1.852	47.04	1.276	32.41	20.84	92.70	32.15	5.64
C0480-072-2750-X	0.480	12.19	0.072	1.83	2.750	69.85	2.033	51.65	1.389	35.28	20.84	92.70	29.07	5.10
C0480-072-3000-X	0.480	12.19	0.072	1.83	3.000	76.20	2.216	56.28	1.501	38.13	20.84	92.70	26.57	4.66
C0480-072-3250-X	0.480	12.19	0.072	1.83	3.250	82.55	2.396	60.87	1.614	41.00	20.84	92.70	24.41	4.27
C0480-072-3500-X	0.480	12.19	0.072	1.83	3.500	88.90	2.577	65.46	1.726	43.84	20.84	92.70	22.57	3.96
C0480-074-0500-X	0.480	12.19	0.074	1.88	0.500	12.70	0.406	10.32	0.350	8.89	22.55	100.31	240.82	42.17
C0480-074-0620-X	0.480	12.19	0.074	1.88	0.620	15.75	0.494	12.56	0.421	10.69	22.55	100.31	179.59	31.45
C0480-074-0750-X	0.480	12.19	0.074	1.88	0.750	19.05	0.590	14.98	0.482	12.24	22.55	100.31	140.86	24.68
C0480-074-0880-X	0.480	12.19	0.074	1.88	0.880	22.35	0.685	17.40	0.546	13.87	22.55	100.31	115.79	20.28
C0480-074-1000-X	0.480	12.19	0.074	1.88	1.000	25.40	0.773	19.64	0.610	15.49	22.55	100.31	99.46	17.43
C0480-074-1250-X	0.480	12.19	0.074	1.88	1.250	31.75	0.957	24.30	0.734	18.64	22.55	100.31	76.89	13.47
C0480-074-1500-X	0.480	12.19	0.074	1.88	1.500	38.10	1.140	28.97	0.855	21.72	22.55	100.31	62.72	10.98
C0480-074-1750-X	0.480	12.19	0.074	1.88	1.750	44.45	1.324	33.62	0.972	24.69	22.55	100.31	52.90	9.26
C0480-074-2000-X	0.480	12.19	0.074	1.88	2.000	50.80	1.508	38.30	1.089	27.66	22.55	100.31	45.82	8.02
C0480-074-2250-X	0.480	12.19	0.074	1.88	2.250	57.15	1.691	42.94	1.206	30.63	22.55	100.31	40.32	7.06
C0480-074-2500-X	0.480	12.19	0.074	1.88	2.500	63.50	1.875	47.62	1.324	33.63	22.55	100.31	36.07	6.32
C0480-074-2750-X	0.480	12.19	0.074	1.88	2.750	69.85	2.058	52.26	1.441	36.60	22.55	100.31	32.57	5.71
C0480-074-3000-X	0.480	12.19	0.074	1.88	3.000	76.20	2.242	56.94	1.558	39.57	22.55	100.31	29.74	5.20
C0480-074-3250-X	0.480	12.19	0.074	1.88	3.250	82.55	2.425	61.58	1.675	42.55	22.55	100.31	27.32	4.78
C0480-074-3500-X	0.480	12.19	0.074	1.88	3.500	88.90	2.609	66.28	1.792	45.52	22.55	100.31	25.32	4.43
C0480-081-0500-X	0.480	12.19	0.081	2.06	0.500	12.70	0.423	10.75	0.379	9.63	28.56	127.04	372.10	65.16
C0480-081-0620-X	0.480	12.19	0.081	2.06	0.620	15.75	0.516	13.11	0.458	11.63	28.56	127.04	274.64	48.09
C0480-081-0750-X	0.480	12.19	0.081	2.06	0.750	19.05	0.616	15.66	0.526	13.36	28.56	127.04	213.91	37.46
C0480-081-0880-X	0.480	12.19	0.081	2.06	0.880	22.35	0.717	18.21	0.598	15.19	28.56	127.04	175.18	30.68
C0480-081-1000-X	0.480	12.19	0.081	2.06	1.000	25.40	0.810	20.57	0.669	16.99	28.56	127.04	150.11	26.29
C0480-081-1250-X	0.480	12.19	0.081	2.06	1.250	31.75	1.003	25.47	0.808	20.52	28.56	127.04	115.62	20.24
C0480-081-1500-X	0.480	12.19	0.081	2.06	1.500	38.10	1.196	30.39	0.942	23.93	28.56	127.04	94.05	16.48
C0480-081-1750-X	0.480	12.19	0.081	2.06	1.750	44.45	1.389	35.29	1.073	27.25	28.56	127.04	79.22	13.87
C0480-081-2000-X	0.480	12.19	0.081	2.06	2.000	50.80	1.583	40.20	1.204	30.58	28.56	127.04	68.47	12.00
C0480-081-2250-X	0.480	12.19	0.081	2.06	2.250	57.15	1.776	45.10	1.334	33.88	28.56	127.04	60.23	10.54
C0480-081-2500-X	0.480	12.19	0.081	2.06	2.500	63.50	1.969	50.02	1.465	37.21	28.56	127.04	53.81	9.42
C0480-081-2750-X	0.480	12.19	0.081	2.06	2.750	69.85	2.162	54.91	1.595	40.51	28.56	127.04	48.56	8.51

FOR INFORMATION ON ALTERNATIVE FINISHES, SEE PAGE 311

Part Numbers with an "*" are squared and not ground.

316 STAINLESS STEEL

Catalog #	Outside Diameter (OD)		Wire Diameter (d)		Free Length (L) Approx		Load Length (L_1)		Solid Height (Sh) Approx		Load (P) at L_1		Spring Rate (R)	
	in	mm	in	mm	in	mm	in	mm	in	mm	lb	N	lb/in	N/mm
C0480-081-3000-X	0.480	12.19	0.081	2.06	3.000	76.20	2.355	59.83	1.726	43.84	28.56	127.04	44.32	7.76
C0480-081-3250-X	0.480	12.19	0.081	2.06	3.250	82.55	2.549	64.74	1.857	47.17	28.56	127.04	40.73	7.13
C0480-081-3500-X	0.480	12.19	0.081	2.06	3.500	88.90	2.741	69.63	1.987	50.47	28.56	127.04	37.65	6.60
D22050X	0.531	13.50	0.039	1.00	0.945	24.00	0.519	13.18	0.217	5.50	59.70	13.42	7.08	1.24
D22060X	0.531	13.50	0.039	1.00	1.437	36.50	0.768	19.51	0.295	7.50	59.70	13.42	4.51	0.79
D22070X	0.531	13.50	0.039	1.00	2.185	55.50	1.149	29.19	0.413	10.50	59.70	13.42	2.91	0.51
D22080X	0.531	13.50	0.039	1.00	3.169	80.50	1.615	41.03	0.571	14.50	59.70	13.42	1.94	0.34
D22090X	0.531	13.50	0.039	1.00	4.528	115.00	2.230	56.65	0.807	20.50	59.70	13.42	1.31	0.23
D22250X	0.541	13.75	0.049	1.25	1.063	27.00	0.737	18.73	0.271	6.88	111.12	24.98	17.24	3.02
D22260X	0.541	13.75	0.049	1.25	1.634	41.50	1.122	28.49	0.369	9.38	111.12	24.98	10.96	1.92
D22270X	0.541	13.75	0.049	1.25	2.461	62.50	1.667	42.35	0.517	13.13	111.12	24.98	7.08	1.24
D22280X	0.541	13.75	0.049	1.25	3.563	90.50	2.406	61.11	0.714	18.13	111.12	24.98	4.85	0.85
D22290X	0.541	13.75	0.049	1.25	5.118	130.00	3.393	86.18	1.009	25.63	111.12	24.98	3.25	0.57
D23190X	0.551	14.00	0.110	2.80	0.807	20.50	0.724	18.40	0.606	15.40	992.89	223.21	606.42	106.20
D23200X	0.551	14.00	0.110	2.80	1.142	29.00	0.974	24.74	0.827	21.00	992.89	223.21	298.98	52.36
D23210X	0.551	14.00	0.110	2.80	1.807	45.90	1.582	40.18	1.268	32.20	992.89	223.21	222.98	39.05
D23220X	0.551	14.00	0.110	2.80	2.811	71.40	2.444	62.07	1.929	49.00	992.89	223.21	136.64	23.93
D22450X	0.555	14.10	0.063	1.60	0.945	24.00	0.708	17.98	0.346	8.80	217.78	48.96	46.42	8.13
D22460X	0.555	14.10	0.063	1.60	1.417	36.00	1.046	26.57	0.472	12.00	217.78	48.96	29.64	5.19
D22470X	0.555	14.10	0.063	1.60	2.106	53.50	1.534	38.97	0.661	16.80	217.78	48.96	19.24	3.37
D22480X	0.555	14.10	0.063	1.60	3.071	78.00	2.222	56.43	0.913	23.20	217.78	48.96	12.96	2.27
D22490X	0.555	14.10	0.063	1.60	4.528	115.00	3.268	83.00	1.291	32.80	217.78	48.96	8.74	1.53
D22650X	0.571	14.50	0.079	2.00	0.886	22.50	0.711	18.06	0.433	11.00	393.67	88.50	113.80	19.93
D22660X	0.571	14.50	0.079	2.00	1.299	33.00	1.024	26.01	0.591	15.00	393.67	88.50	72.29	12.66
D22670X	0.571	14.50	0.079	2.00	1.949	49.50	1.522	38.67	0.827	21.00	393.67	88.50	46.65	8.17
D22680X	0.571	14.50	0.079	2.00	2.795	71.00	2.170	55.11	1.142	29.00	393.67	88.50	31.81	5.57
D22690X	0.571	14.50	0.079	2.00	4.134	105.00	3.210	81.53	1.614	41.00	393.67	88.50	21.53	3.77
D22890X	0.591	15.00	0.087	2.20	0.787	20.00	0.626	15.89	0.476	12.10	494.55	111.18	154.40	27.04
D22900X	0.591	15.00	0.087	2.20	1.189	30.20	0.935	23.75	0.650	16.50	494.55	111.18	98.39	17.23
D22910X	0.591	15.00	0.087	2.20	1.925	48.90	1.486	37.74	0.996	25.30	494.55	111.18	56.87	9.96
D22940X	0.591	15.00	0.098	2.50	0.866	22.00	0.739	18.78	0.541	13.75	696.77	156.64	277.57	48.61
D22950X	0.591	15.00	0.098	2.50	1.260	32.00	1.061	26.94	0.738	18.75	696.77	156.64	176.79	30.96
D22960X	0.591	15.00	0.098	2.50	1.870	47.50	1.562	39.68	1.033	26.25	696.77	156.64	114.32	20.02
D22970X	0.591	15.00	0.098	2.50	2.657	67.50	2.203	55.95	1.427	36.25	696.77	156.64	77.43	13.56
D22980X	0.591	15.00	0.098	2.50	3.858	98.00	3.184	80.88	2.018	51.25	696.77	156.64	52.25	9.15
C0600-045-0500-X	0.600	15.24	0.045	1.14	0.500	12.70	0.274	6.95	0.153	3.89	4.66	20.73	20.58	3.61
C0600-045-0625-X	0.600	15.24	0.045	1.14	0.620	15.75	0.309	7.86	0.179	4.55	4.66	20.73	14.99	2.63
C0600-045-0750-X	0.600	15.24	0.045	1.14	0.750	19.05	0.351	8.90	0.205	5.21	4.66	20.73	11.66	2.05
C0600-045-0880-X	0.600	15.24	0.045	1.14	0.880	22.35	0.414	10.52	0.224	5.69	4.66	20.73	10.00	1.75
C0600-045-1000-X	0.600	15.24	0.045	1.14	1.000	25.40	0.441	11.20	0.251	6.38	4.66	20.73	8.33	1.45
C0600-045-1250-X	0.600	15.24	0.045	1.14	1.250	31.75	0.551	14.00	0.292	7.42	4.66	20.73	6.66	1.17
C0600-045-1380-X	0.600	15.24	0.045	1.14	1.380	35.05	0.592	15.05	0.306	7.77	4.66	20.73	5.91	1.03
C0600-045-1500-X	0.600	15.24	0.045	1.14	1.500	38.10	0.640	16.25	0.338	8.59	4.66	20.73	5.41	0.95
C0600-045-1750-X	0.600	15.24	0.045	1.14	1.750	44.45	0.915	23.25	0.366	9.30	4.66	20.73	5.58	0.98
C0600-045-2000-X	0.600	15.24	0.045	1.14	2.000	50.80	1.036	26.31	0.401	10.19	4.66	20.73	4.83	0.84
C0600-045-2250-X	0.600	15.24	0.045	1.14	2.250	57.15	1.175	29.84	0.436	11.07	4.66	20.73	4.33	0.75
C0600-045-2500-X	0.600	15.24	0.045	1.14	2.500	63.50	1.284	32.62	0.471	11.96	4.66	20.73	3.83	0.67
C0600-045-2750-X	0.600	15.24	0.045	1.14	2.750	69.85	1.278	32.47	0.540	13.72	4.66	20.73	3.17	0.56
C0600-045-3000-X	0.600	15.24	0.045	1.14	3.000	76.20	1.402	35.62	0.585	14.86	4.66	20.73	2.92	0.51
C0600-045-3500-X	0.600	15.24	0.045	1.14	3.500	88.90	1.636	41.56	0.659	16.74	4.66	20.73	2.50	0.44
C0600-049-0620-X	0.600	15.24	0.049	1.24	0.620	15.75	0.369	9.36	0.234	5.94	5.86	26.07	23.32	4.08
C0600-049-0750-X	0.600	15.24	0.049	1.24	0.750	19.05	0.436	11.07	0.255	6.48	5.86	26.07	18.66	3.27
C0600-049-1000-X	0.600	15.24	0.049	1.24	1.000	25.40	0.565	14.36	0.297	7.54	5.86	26.07	13.49	2.36
C0600-049-1250-X	0.600	15.24	0.049	1.24	1.250	31.75	0.696	17.67	0.338	8.59	5.86	26.07	10.58	1.86
C0600-049-1500-X	0.600	15.24	0.049	1.24	1.500	38.10	0.823	20.91	0.380	9.65	5.86	26.07	8.66	1.52
C0600-049-1750-X	0.600	15.24	0.049	1.24	1.750	44.45	0.950	24.13	0.422	10.72	5.86	26.07	7.33	1.28
C0600-049-2000-X	0.600	15.24	0.049	1.24	2.000	50.80	1.086	27.58	0.463	11.76	5.86	26.07	6.41	1.12
C0600-049-2250-X	0.600	15.24	0.049	1.24	2.250	57.15	1.215	30.86	0.505	12.83	5.86	26.07	5.66	1.00
C0600-049-2500-X	0.600	15.24	0.049	1.24	2.500	63.50	1.346	34.19	0.546	13.87	5.86	26.07	5.08	0.89
C0600-049-2750-X	0.600	15.24	0.049	1.24	2.750	69.85	1.470	37.34	0.588	14.94	5.86	26.07	4.58	0.81
C0600-049-3000-X	0.600	15.24	0.049	1.24	3.000	76.20	1.592	40.44	0.629	15.98	5.86	26.07	4.17	0.74
C0600-055-0625-X	0.600	15.24	0.055	1.40	0.620	15.75	0.378	9.60	0.226	5.74	8.07	35.90	33.32	5.83
C0600-055-0750-X	0.600	15.24	0.055	1.40	0.750	19.05	0.457	11.60	0.251	6.38	8.07	35.90	27.49	4.82
C0600-055-0880-X	0.600	15.24	0.055	1.40	0.880	22.35	0.534	13.57	0.276	7.01	8.07	35.90	23.32	4.08

Part Numbers with an "*" are squared and not ground.

316 STAINLESS STEEL

Catalog #	Outside Diameter (OD)		Wire Diameter (d)		Free Length (L) Approx		Load Length (L_1)		Solid Height (Sh) Approx		Load (P) at L_1		Spring Rate (R)	
	in	mm	in	mm	in	mm	in	mm	in	mm	lb	N	lb/in	N/mm
C0600-055-1000-X	0.600	15.24	0.055	1.40	1.000	25.40	0.597	15.15	0.304	7.72	8.07	35.90	19.99	3.50
C0600-055-1250-X	0.600	15.24	0.055	1.40	1.250	31.75	0.712	18.09	0.369	9.37	8.07	35.90	14.99	2.63
C0600-055-1500-X	0.600	15.24	0.055	1.40	1.500	38.10	0.854	21.70	0.420	10.67	8.07	35.90	12.50	2.19
C0600-055-1750-X	0.600	15.24	0.055	1.40	1.750	44.45	1.005	25.53	0.509	12.93	8.07	35.90	10.83	1.89
C0600-055-2000-X	0.600	15.24	0.055	1.40	2.000	50.80	1.143	29.04	0.562	14.27	8.07	35.90	9.41	1.65
C0600-055-2250-X	0.600	15.24	0.055	1.40	2.250	57.15	1.282	32.56	0.614	15.60	8.07	35.90	8.33	1.45
C0600-055-2500-X	0.600	15.24	0.055	1.40	2.500	63.50	1.412	35.87	0.667	16.94	8.07	35.90	7.41	1.30
C0600-055-2750-X	0.600	15.24	0.055	1.40	2.750	69.85	1.583	40.22	0.701	17.81	8.07	35.90	6.91	1.21
C0600-055-3000-X	0.600	15.24	0.055	1.40	3.000	76.20	1.726	43.84	0.752	19.10	8.07	35.90	6.33	1.10
C0600-059-0620-X	0.600	15.24	0.059	1.50	0.620	15.75	0.398	10.11	0.298	7.57	9.92	44.13	44.73	7.83
C0600-059-0750-X	0.600	15.24	0.059	1.50	0.750	19.05	0.471	11.97	0.329	8.36	9.92	44.13	35.57	6.23
C0600-059-0880-X	0.600	15.24	0.059	1.50	0.880	22.35	0.544	13.81	0.360	9.14	9.92	44.13	29.49	5.17
C0600-059-1000-X	0.600	15.24	0.059	1.50	1.000	25.40	0.611	15.51	0.389	9.88	9.92	44.13	25.49	4.47
C0600-059-1250-X	0.600	15.24	0.059	1.50	1.250	31.75	0.750	19.04	0.449	11.40	9.92	44.13	19.83	3.47
C0600-059-1500-X	0.600	15.24	0.059	1.50	1.500	38.10	0.889	22.59	0.510	12.95	9.92	44.13	16.24	2.84
C0600-059-1750-X	0.600	15.24	0.059	1.50	1.750	44.45	1.028	26.12	0.570	14.48	9.92	44.13	13.74	2.40
C0600-059-2000-X	0.600	15.24	0.059	1.50	2.000	50.80	1.167	29.65	0.630	16.00	9.92	44.13	11.91	2.08
C0600-059-2250-X	0.600	15.24	0.059	1.50	2.250	57.15	1.305	33.14	0.690	17.53	9.92	44.13	10.50	1.84
C0600-059-2500-X	0.600	15.24	0.059	1.50	2.500	63.50	1.446	36.73	0.750	19.05	9.92	44.13	9.41	1.65
C0600-059-2750-X	0.600	15.24	0.059	1.50	2.750	69.85	1.582	40.19	0.811	20.60	9.92	44.13	8.50	1.49
C0600-059-3000-X	0.600	15.24	0.059	1.50	3.000	76.20	1.733	44.02	0.871	22.12	9.92	44.13	7.83	1.37
C0600-063-0625-X	0.600	15.24	0.063	1.60	0.620	15.75	0.392	9.96	0.280	7.11	11.76	52.31	51.65	9.05
C0600-063-0750-X	0.600	15.24	0.063	1.60	0.750	19.05	0.473	12.02	0.314	7.98	11.76	52.31	42.48	7.44
C0600-063-0880-X	0.600	15.24	0.063	1.60	0.880	22.35	0.559	14.20	0.343	8.71	11.76	52.31	36.65	6.43
C0600-063-1000-X	0.600	15.24	0.063	1.60	1.000	25.40	0.628	15.96	0.378	9.60	11.76	52.31	31.65	5.55
C0600-063-1250-X	0.600	15.24	0.063	1.60	1.250	31.75	0.795	20.18	0.435	11.05	11.76	52.31	25.82	4.52
C0600-063-1500-X	0.600	15.24	0.063	1.60	1.500	38.10	0.912	23.16	0.526	13.36	11.76	52.31	19.99	3.50
C0600-063-1750-X	0.600	15.24	0.063	1.60	1.750	44.45	1.071	27.21	0.632	16.05	11.76	52.31	17.33	3.03
C0600-063-2000-X	0.600	15.24	0.063	1.60	2.000	50.80	1.216	30.88	0.700	17.78	11.76	52.31	14.99	2.63
C0600-063-2250-X	0.600	15.24	0.063	1.60	2.250	57.15	1.362	34.60	0.768	19.51	11.76	52.31	13.24	2.31
C0600-063-2500-X	0.600	15.24	0.063	1.60	2.500	63.50	1.506	38.25	0.836	21.23	11.76	52.31	11.83	2.07
C0600-063-2750-X	0.600	15.24	0.063	1.60	2.750	69.85	1.719	43.67	0.863	21.92	11.76	52.31	11.41	2.00
C0600-063-3000-X	0.600	15.24	0.063	1.60	3.000	76.20	1.871	47.51	0.927	23.55	11.76	52.31	10.41	1.82
C0600-063-3500-X	0.600	15.24	0.063	1.60	3.500	88.90	2.168	55.07	1.055	26.80	11.76	52.31	8.83	1.54
C0600-067-0625-X	0.600	15.24	0.067	1.70	0.620	15.75	0.409	10.38	0.300	7.62	14.09	62.68	66.64	11.66
C0600-067-0750-X	0.600	15.24	0.067	1.70	0.750	19.05	0.494	12.54	0.336	8.53	14.09	62.68	54.98	9.63
C0600-067-0880-X	0.600	15.24	0.067	1.70	0.880	22.35	0.542	13.76	0.401	10.19	14.09	62.68	41.65	7.30
C0600-067-1000-X	0.600	15.24	0.067	1.70	1.000	25.40	0.624	15.85	0.430	10.92	14.09	62.68	37.49	6.57
C0600-067-1250-X	0.600	15.24	0.067	1.70	1.250	31.75	0.780	19.81	0.505	12.83	14.09	62.68	29.99	5.25
C0600-067-1500-X	0.600	15.24	0.067	1.70	1.500	38.10	0.917	23.28	0.594	15.09	14.09	62.68	24.16	4.24
C0600-067-1750-X	0.600	15.24	0.067	1.70	1.750	44.45	1.014	25.77	0.715	18.16	14.09	62.68	19.16	3.36
C0600-067-2000-X	0.600	15.24	0.067	1.70	2.000	50.80	1.248	31.70	0.771	19.58	14.09	62.68	18.74	3.27
C0600-067-2250-X	0.600	15.24	0.067	1.70	2.250	57.15	1.396	35.45	0.847	21.51	14.09	62.68	16.49	2.89
C0600-067-2500-X	0.600	15.24	0.067	1.70	2.500	63.50	1.544	39.22	0.923	23.44	14.09	62.68	14.74	2.57
C0600-067-2750-X	0.600	15.24	0.067	1.70	2.750	69.85	1.737	44.12	0.966	24.54	14.09	62.68	13.91	2.43
C0600-067-3000-X	0.600	15.24	0.067	1.70	3.000	76.20	1.894	48.12	1.040	26.42	14.09	62.68	12.74	2.22
C0600-072-0620-X	0.600	15.24	0.072	1.83	0.620	15.75	0.442	11.22	0.381	9.68	17.00	75.62	95.38	16.71
C0600-072-0750-X	0.600	15.24	0.072	1.83	0.750	19.05	0.488	12.41	0.396	10.06	17.00	75.62	64.97	11.38
C0600-072-0880-X	0.600	15.24	0.072	1.83	0.880	22.35	0.580	14.73	0.433	11.00	17.00	75.62	56.64	9.91
C0600-072-1000-X	0.600	15.24	0.072	1.83	1.000	25.40	0.629	15.98	0.502	12.75	17.00	75.62	45.82	8.02
C0600-072-1250-X	0.600	15.24	0.072	1.83	1.250	31.75	0.797	20.23	0.581	14.76	17.00	75.62	37.49	6.57
C0600-072-1500-X	0.600	15.24	0.072	1.83	1.500	38.10	0.933	23.70	0.691	17.55	17.00	75.62	29.99	5.25
C0600-072-1750-X	0.600	15.24	0.072	1.83	1.750	44.45	1.070	27.17	0.801	20.35	17.00	75.62	24.99	4.38
C0600-072-2000-X	0.600	15.24	0.072	1.83	2.000	50.80	1.271	32.29	0.848	21.54	17.00	75.62	23.32	4.08
C0600-072-2250-X	0.600	15.24	0.072	1.83	2.250	57.15	1.462	37.14	0.946	24.03	17.00	75.62	21.57	3.78
C0600-072-2500-X	0.600	15.24	0.072	1.83	2.500	63.50	1.617	41.06	1.033	26.24	17.00	75.62	19.24	3.36
C0600-072-2750-X	0.600	15.24	0.072	1.83	2.750	69.85	1.774	45.05	1.119	28.42	17.00	75.62	17.41	3.05
C0600-072-3000-X	0.600	15.24	0.072	1.83	3.000	76.20	1.932	49.06	1.206	30.63	17.00	75.62	15.91	2.78
C0600-081-0620-X	0.600	15.24	0.081	2.06	0.620	15.75	0.488	12.39	0.412	10.46	23.40	104.09	177.10	31.01
C0600-081-0750-X	0.600	15.24	0.081	2.06	0.750	19.05	0.580	14.74	0.459	11.66	23.40	104.09	137.94	24.15
C0600-081-0880-X	0.600	15.24	0.081	2.06	0.880	22.35	0.673	17.09	0.507	12.88	23.40	104.09	112.95	19.79
C0600-081-1000-X	0.600	15.24	0.081	2.06	1.000	25.40	0.758	19.26	0.552	14.02	23.40	104.09	96.79	16.95
C0600-081-1250-X	0.600	15.24	0.081	2.06	1.250	31.75	0.936	23.78	0.644	16.36	23.40	104.09	74.55	13.06
C0600-081-1500-X	0.600	15.24	0.081	2.06	1.500	38.10	1.114	28.30	0.736	18.69	23.40	104.09	60.64	10.61

FOR INFORMATION ON ALTERNATIVE FINISHES, SEE PAGE 311

Part Numbers with an "*" are squared and not ground.

316 STAINLESS STEEL

Catalog #	Outside Diameter (OD)		Wire Diameter (d)		Free Length (L) Approx		Load Length (L_1)		Solid Height (Sh) Approx		Load (P) at L_1		Spring Rate (R)	
	in	mm	in	mm	in	mm	in	mm	in	mm	lb	N	lb/in	N/mm
C0600-081-1750-X	0.600	15.24	0.081	2.06	1.750	44.45	1.292	32.81	0.828	21.03	23.40	104.09	51.06	8.95
C0600-081-2000-X	0.600	15.24	0.081	2.06	2.000	50.80	1.470	37.34	0.920	23.37	23.40	104.09	44.15	7.74
C0600-081-2250-X	0.600	15.24	0.081	2.06	2.250	57.15	1.647	41.84	1.012	25.70	23.40	104.09	38.82	6.79
C0600-081-2500-X	0.600	15.24	0.081	2.06	2.500	63.50	1.826	46.39	1.104	28.04	23.40	104.09	34.74	6.08
C0600-081-2750-X	0.600	15.24	0.081	2.06	2.750	69.85	2.003	50.87	1.196	30.38	23.40	104.09	31.32	5.48
C0600-081-3000-X	0.600	15.24	0.081	2.06	3.000	76.20	2.181	55.39	1.288	32.72	23.40	104.09	28.57	5.01
C0600-081-3250-X	0.600	15.24	0.081	2.06	3.250	82.55	2.358	59.89	1.380	35.05	23.40	104.09	26.24	4.59
C0600-081-3500-X	0.600	15.24	0.081	2.06	3.500	88.90	2.538	64.46	1.472	37.39	23.40	104.09	24.32	4.26
C0600-081-3750-X	0.600	15.24	0.081	2.06	3.750	95.25	2.713	68.92	1.564	39.73	23.40	104.09	22.57	3.96
C0600-081-4000-X	0.600	15.24	0.081	2.06	4.000	101.60	2.894	73.50	1.656	42.06	23.40	104.09	21.16	3.71
C0600-085-0620-X	0.600	15.24	0.085	2.16	0.620	15.75	0.497	12.62	0.433	11.00	26.93	119.79	218.66	38.30
C0600-085-0750-X	0.600	15.24	0.085	2.16	0.750	19.05	0.591	15.02	0.484	12.29	26.93	119.79	169.60	29.70
C0600-085-0880-X	0.600	15.24	0.085	2.16	0.880	22.35	0.686	17.42	0.536	13.61	26.93	119.79	138.61	24.27
C0600-085-1000-X	0.600	15.24	0.085	2.16	1.000	25.40	0.773	19.63	0.583	14.81	26.93	119.79	118.54	20.75
C0600-085-1250-X	0.600	15.24	0.085	2.16	1.250	31.75	0.955	24.24	0.682	17.32	26.93	119.79	91.13	15.95
C0600-085-1500-X	0.600	15.24	0.085	2.16	1.500	38.10	1.136	28.85	0.781	19.84	26.93	119.79	73.97	12.96
C0600-085-1750-X	0.600	15.24	0.085	2.16	1.750	44.45	1.318	33.47	0.880	22.35	26.93	119.79	62.31	10.91
C0600-085-2000-X	0.600	15.24	0.085	2.16	2.000	50.80	1.499	38.07	0.978	24.84	26.93	119.79	53.73	9.40
C0600-085-2250-X	0.600	15.24	0.085	2.16	2.250	57.15	1.681	42.69	1.077	27.36	26.93	119.79	47.31	8.28
C0600-085-2500-X	0.600	15.24	0.085	2.16	2.500	63.50	1.862	47.31	1.176	29.87	26.93	119.79	42.23	7.39
C0600-085-2750-X	0.600	15.24	0.085	2.16	2.750	69.85	2.044	51.92	1.275	32.39	26.93	119.79	38.15	6.69
C0600-085-3000-X	0.600	15.24	0.085	2.16	3.000	76.20	2.225	56.51	1.374	34.90	26.93	119.79	34.74	6.08
C0600-085-3250-X	0.600	15.24	0.085	2.16	3.250	82.55	2.406	61.11	1.473	37.41	26.93	119.79	31.90	5.59
C0600-085-3500-X	0.600	15.24	0.085	2.16	3.500	88.90	2.589	65.77	1.572	39.93	26.93	119.79	29.57	5.18
C0600-085-3750-X	0.600	15.24	0.085	2.16	3.750	95.25	2.770	70.37	1.670	42.42	26.93	119.79	27.49	4.82
C0600-085-4000-X	0.600	15.24	0.085	2.16	4.000	101.60	2.950	74.94	1.769	44.93	26.93	119.79	25.66	4.50
C0600-092-0750-X	0.600	15.24	0.092	2.34	0.750	19.05	0.611	15.51	0.524	13.31	33.87	150.66	242.82	42.52
C0600-092-0880-X	0.600	15.24	0.092	2.34	0.880	22.35	0.708	17.99	0.581	14.76	33.87	150.66	197.42	34.57
C0600-092-1000-X	0.600	15.24	0.092	2.34	1.000	25.40	0.799	20.29	0.633	16.08	33.87	150.66	168.43	29.49
C0600-092-1250-X	0.600	15.24	0.092	2.34	1.250	31.75	0.987	25.07	0.743	18.87	33.87	150.66	128.87	22.57
C0600-092-1500-X	0.600	15.24	0.092	2.34	1.500	38.10	1.176	29.86	0.853	21.67	33.87	150.66	104.46	18.30
C0600-092-1750-X	0.600	15.24	0.092	2.34	1.750	44.45	1.364	34.64	0.962	24.43	33.87	150.66	87.71	15.36
C0600-092-2000-X	0.600	15.24	0.092	2.34	2.000	50.80	1.552	39.43	1.072	27.23	33.87	150.66	75.64	13.24
C0600-092-2250-X	0.600	15.24	0.092	2.34	2.250	57.15	1.741	44.21	1.181	30.00	33.87	150.66	66.47	11.65
C0600-092-2500-X	0.600	15.24	0.092	2.34	2.500	63.50	1.929	49.00	1.291	32.79	33.87	150.66	59.31	10.39
C0600-092-2750-X	0.600	15.24	0.092	2.34	2.750	69.85	2.118	53.79	1.400	35.56	33.87	150.66	53.56	9.39
C0600-092-3000-X	0.600	15.24	0.092	2.34	3.000	76.20	2.306	58.58	1.510	38.35	33.87	150.66	48.81	8.55
C0600-092-3250-X	0.600	15.24	0.092	2.34	3.250	82.55	2.494	63.35	1.619	41.12	33.87	150.66	44.82	7.85
C0600-092-3500-X	0.600	15.24	0.092	2.34	3.500	88.90	2.682	68.12	1.729	43.92	33.87	150.66	41.40	7.25
C0600-092-3750-X	0.600	15.24	0.092	2.34	3.750	95.25	2.872	72.95	1.838	46.69	33.87	150.66	38.57	6.76
C0600-092-4000-X	0.600	15.24	0.092	2.34	4.000	101.60	3.059	77.69	1.948	49.48	33.87	150.66	35.99	6.30
C0600-098-0750-X	0.600	15.24	0.098	2.49	0.750	19.05	0.627	15.93	0.559	14.20	39.65	176.37	323.04	56.57
C0600-098-0880-X	0.600	15.24	0.098	2.49	0.880	22.35	0.728	18.50	0.621	15.77	39.65	176.37	261.65	45.83
C0600-098-1000-X	0.600	15.24	0.098	2.49	1.000	25.40	0.822	20.88	0.678	17.22	39.65	176.37	222.58	38.98
C0600-098-1250-X	0.600	15.24	0.098	2.49	1.250	31.75	1.017	25.82	0.798	20.27	39.65	176.37	169.85	29.75
C0600-098-1500-X	0.600	15.24	0.098	2.49	1.500	38.10	1.211	30.76	0.917	23.29	39.65	176.37	137.28	24.04
C0600-098-1750-X	0.600	15.24	0.098	2.49	1.750	44.45	1.406	35.71	1.037	26.34	39.65	176.37	115.20	20.17
C0600-098-2000-X	0.600	15.24	0.098	2.49	2.000	50.80	1.600	40.65	1.156	29.36	39.65	176.37	99.21	17.37
C0600-098-2250-X	0.600	15.24	0.098	2.49	2.250	57.15	1.795	45.59	1.276	32.41	39.65	176.37	87.13	15.25
C0600-098-2500-X	0.600	15.24	0.098	2.49	2.500	63.50	1.990	50.54	1.395	35.43	39.65	176.37	77.72	13.61
C0600-098-2750-X	0.600	15.24	0.098	2.49	2.750	69.85	2.184	55.48	1.515	38.48	39.65	176.37	70.06	12.28
C0600-098-3000-X	0.600	15.24	0.098	2.49	3.000	76.20	2.379	60.42	1.634	41.50	39.65	176.37	63.81	11.17
C0600-098-3250-X	0.600	15.24	0.098	2.49	3.250	82.55	2.574	65.38	1.754	44.55	39.65	176.37	58.64	10.26
C0600-098-3500-X	0.600	15.24	0.098	2.49	3.500	88.90	2.768	70.30	1.873	47.57	39.65	176.37	54.15	9.49
C0600-098-3750-X	0.600	15.24	0.098	2.49	3.750	95.25	2.963	75.27	1.993	50.62	39.65	176.37	50.40	8.83
C0600-098-4000-X	0.600	15.24	0.098	2.49	4.000	101.60	3.158	80.20	2.112	53.64	39.65	176.37	47.06	8.25
D22300X	0.679	17.25	0.049	1.25	1.594	40.50	1.045	26.54	0.271	6.88	89.41	20.10	8.22	1.44
D22310X	0.679	17.25	0.049	1.25	2.441	62.00	1.581	40.15	0.369	9.38	89.41	20.10	5.25	0.92
D22320X	0.679	17.25	0.049	1.25	3.701	94.00	2.382	60.50	0.517	13.13	89.41	20.10	3.43	0.60
D22330X	0.679	17.25	0.049	1.25	5.512	140.00	3.533	89.75	0.714	18.13	89.41	20.10	2.28	0.40
D22340X	0.679	17.25	0.049	1.25	8.071	205.00	5.140	130.56	1.009	25.63	89.41	20.10	1.54	0.27
D22500X	0.693	17.60	0.063	1.60	1.339	34.00	0.935	23.74	0.346	8.80	176.68	39.72	22.10	3.87
D22510X	0.693	17.60	0.063	1.60	2.028	51.50	1.394	35.42	0.472	12.00	176.68	39.72	14.10	2.47
D22520X	0.693	17.60	0.063	1.60	3.051	77.50	2.074	52.68	0.661	16.80	176.68	39.72	9.14	1.60

Part Numbers with an "*" are squared and not ground.

316 STAINLESS STEEL

Catalog #	Outside Diameter (OD)		Wire Diameter (d)		Free Length (L) Approx		Load Length (L_1)		Solid Height (Sh) Approx		Load (P) at L_1		Spring Rate (R)	
	in	mm	in	mm	in	mm	in	mm	in	mm	lb	N	lb/in	N/mm
D22530X	0.693	17.60	0.063	1.60	4.331	110.00	2.883	73.22	0.913	23.20	176.68	39.72	6.17	1.08
D22540X	0.693	17.60	0.063	1.60	6.496	165.00	4.354	110.59	1.291	32.80	176.68	39.72	4.17	0.73
D22700X	0.709	18.00	0.079	2.00	1.181	30.00	0.880	22.35	0.433	11.00	322.41	72.48	54.13	9.48
D22710X	0.709	18.00	0.079	2.00	1.772	45.00	1.298	32.98	0.591	15.00	322.41	72.48	34.43	6.03
D22720X	0.709	18.00	0.079	2.00	2.677	68.00	1.947	49.46	0.827	21.00	322.41	72.48	22.33	3.91
D22730X	0.709	18.00	0.079	2.00	3.858	98.00	2.785	70.75	1.142	29.00	322.41	72.48	15.19	2.66
D22740X	0.709	18.00	0.079	2.00	5.709	145.00	4.123	104.73	1.614	41.00	322.41	72.48	10.28	1.80
C0720-055-0620-X	0.720	18.29	0.055	1.40	0.620	15.75	0.370	9.39	0.241	6.12	6.77	30.11	27.07	4.75
C0720-055-0750-X	0.720	18.29	0.055	1.40	0.750	19.05	0.396	10.07	0.221	5.61	6.77	30.11	19.16	3.36
C0720-055-0880-X	0.720	18.29	0.055	1.40	0.880	22.35	0.473	12.02	0.238	6.05	6.77	30.11	16.66	2.92
C0720-055-1000-X	0.720	18.29	0.055	1.40	1.000	25.40	0.560	14.23	0.248	6.30	6.77	30.11	15.41	2.70
C0720-055-1250-X	0.720	18.29	0.055	1.40	1.250	31.75	0.708	17.98	0.281	7.14	6.77	30.11	12.50	2.19
C0720-055-1500-X	0.720	18.29	0.055	1.40	1.500	38.10	0.793	20.14	0.333	8.46	6.77	30.11	9.58	1.68
C0720-055-1750-X	0.720	18.29	0.055	1.40	1.750	44.45	0.866	22.00	0.388	9.86	6.77	30.11	7.66	1.35
C0720-055-2000-X	0.720	18.29	0.055	1.40	2.000	50.80	1.043	26.50	0.411	10.44	6.77	30.11	7.08	1.24
C0720-055-2250-X	0.720	18.29	0.055	1.40	2.250	57.15	1.207	30.67	0.482	12.24	6.77	30.11	6.50	1.14
C0720-055-2500-X	0.720	18.29	0.055	1.40	2.500	63.50	1.321	33.56	0.519	13.18	6.77	30.11	5.75	1.02
C0720-055-2750-X	0.720	18.29	0.055	1.40	2.750	69.85	1.459	37.06	0.556	14.12	6.77	30.11	5.25	0.93
C0720-055-3000-X	0.720	18.29	0.055	1.40	3.000	76.20	1.573	39.96	0.593	15.06	6.77	30.11	4.75	0.84
C0720-059-0750-X	0.720	18.29	0.059	1.50	0.750	19.05	0.446	11.32	0.285	7.24	8.34	37.10	27.41	4.80
C0720-059-0880-X	0.720	18.29	0.059	1.50	0.880	22.35	0.513	13.04	0.308	7.82	8.34	37.10	22.74	3.98
C0720-059-1000-X	0.720	18.29	0.059	1.50	1.000	25.40	0.574	14.58	0.328	8.33	8.34	37.10	19.58	3.43
C0720-059-1250-X	0.720	18.29	0.059	1.50	1.250	31.75	0.703	17.86	0.371	9.42	8.34	37.10	15.24	2.66
C0720-059-1500-X	0.720	18.29	0.059	1.50	1.500	38.10	0.833	21.15	0.414	10.52	8.34	37.10	12.50	2.19
C0720-059-1750-X	0.720	18.29	0.059	1.50	1.750	44.45	0.962	24.43	0.457	11.61	8.34	37.10	10.58	1.86
C0720-059-2000-X	0.720	18.29	0.059	1.50	2.000	50.80	1.090	27.68	0.499	12.67	8.34	37.10	9.16	1.61
C0720-059-2250-X	0.720	18.29	0.059	1.50	2.250	57.15	1.218	30.94	0.542	13.77	8.34	37.10	8.08	1.42
C0720-059-2500-X	0.720	18.29	0.059	1.50	2.500	63.50	1.349	34.27	0.585	14.86	8.34	37.10	7.25	1.28
C0720-063-0620-X	0.720	18.29	0.063	1.60	0.620	15.75	0.392	9.95	0.286	7.26	9.89	43.99	43.32	7.58
C0720-063-0750-X	0.720	18.29	0.063	1.60	0.750	19.05	0.390	9.91	0.284	7.21	9.89	43.99	27.49	4.82
C0720-063-0880-X	0.720	18.29	0.063	1.60	0.880	22.35	0.456	11.58	0.313	7.95	9.89	43.99	23.32	4.08
C0720-063-1000-X	0.720	18.29	0.063	1.60	1.000	25.40	0.505	12.83	0.344	8.74	9.89	43.99	19.99	3.50
C0720-063-1250-X	0.720	18.29	0.063	1.60	1.250	31.75	0.608	15.44	0.409	10.39	9.89	43.99	15.41	2.70
C0720-063-1500-X	0.720	18.29	0.063	1.60	1.500	38.10	0.708	17.99	0.475	12.07	9.89	43.99	12.50	2.19
C0720-063-1750-X	0.720	18.29	0.063	1.60	1.750	44.45	0.836	21.24	0.529	13.44	9.89	43.99	10.83	1.89
C0720-063-2000-X	0.720	18.29	0.063	1.60	2.000	50.80	0.920	23.37	0.602	15.29	9.89	43.99	9.16	1.61
C0720-063-2250-X	0.720	18.29	0.063	1.60	2.250	57.15	1.268	32.22	0.605	15.37	9.89	43.99	10.08	1.77
C0720-063-2500-X	0.720	18.29	0.063	1.60	2.500	63.50	1.400	35.57	0.654	16.61	9.89	43.99	9.00	1.58
C0720-063-2750-X	0.720	18.29	0.063	1.60	2.750	69.85	1.538	39.07	0.702	17.83	9.89	43.99	8.16	1.44
C0720-063-3000-X	0.720	18.29	0.063	1.60	3.000	76.20	1.665	42.30	0.751	19.08	9.89	43.99	7.41	1.30
C0720-065-0750-X	0.720	18.29	0.065	1.65	0.750	19.05	0.467	11.86	0.324	8.23	10.85	48.26	38.32	6.71
C0720-065-0880-X	0.720	18.29	0.065	1.65	0.880	22.35	0.537	13.65	0.351	8.92	10.85	48.26	31.65	5.55
C0720-065-1000-X	0.720	18.29	0.065	1.65	1.000	25.40	0.603	15.31	0.376	9.55	10.85	48.26	27.32	4.78
C0720-065-1250-X	0.720	18.29	0.065	1.65	1.250	31.75	0.737	18.72	0.428	10.87	10.85	48.26	21.16	3.71
C0720-065-1500-X	0.720	18.29	0.065	1.65	1.500	38.10	0.874	22.19	0.480	12.19	10.85	48.26	17.33	3.03
C0720-065-1750-X	0.720	18.29	0.065	1.65	1.750	44.45	1.010	25.65	0.532	13.51	10.85	48.26	14.66	2.57
C0720-065-2000-X	0.720	18.29	0.065	1.65	2.000	50.80	1.143	29.03	0.584	14.83	10.85	48.26	12.66	2.22
C0720-065-2250-X	0.720	18.29	0.065	1.65	2.250	57.15	1.278	32.46	0.636	16.15	10.85	48.26	11.16	1.96
C0720-065-2500-X	0.720	18.29	0.065	1.65	2.500	63.50	1.415	35.93	0.689	17.50	10.85	48.26	10.00	1.75
C0720-065-2750-X	0.720	18.29	0.065	1.65	2.750	69.85	1.555	39.50	0.714	18.14	10.85	48.26	9.08	1.59
C0720-065-3000-X	0.720	18.29	0.065	1.65	3.000	76.20	1.684	42.78	0.793	20.14	10.85	48.26	8.25	1.45
C0720-067-0750-X	0.720	18.29	0.067	1.70	0.750	19.05	0.465	11.81	0.279	7.09	11.87	52.80	41.65	7.30
C0720-067-0880-X	0.720	18.29	0.067	1.70	0.880	22.35	0.524	13.31	0.315	8.00	11.87	52.80	33.32	5.83
C0720-067-1000-X	0.720	18.29	0.067	1.70	1.000	25.40	0.568	14.44	0.354	8.99	11.87	52.80	27.49	4.82
C0720-067-1250-X	0.720	18.29	0.067	1.70	1.250	31.75	0.722	18.35	0.403	10.24	11.87	52.80	22.49	3.94
C0720-067-1500-X	0.720	18.29	0.067	1.70	1.500	38.10	0.853	21.65	0.464	11.79	11.87	52.80	18.33	3.20
C0720-067-1750-X	0.720	18.29	0.067	1.70	1.750	44.45	0.959	24.35	0.538	13.67	11.87	52.80	14.99	2.63
C0720-067-2000-X	0.720	18.29	0.067	1.70	2.000	50.80	1.081	27.46	0.603	15.32	11.87	52.80	12.91	2.26
C0720-067-2250-X	0.720	18.29	0.067	1.70	2.250	57.15	1.294	32.87	0.669	16.99	11.87	52.80	12.41	2.17
C0720-067-2500-X	0.720	18.29	0.067	1.70	2.500	63.50	1.429	36.30	0.724	18.39	11.87	52.80	11.08	1.94
C0720-067-3000-X	0.720	18.29	0.067	1.70	3.000	76.20	1.705	43.31	0.835	21.21	11.87	52.80	9.16	1.61
C0720-067-3250-X	0.720	18.29	0.067	1.70	3.250	82.55	1.919	48.74	0.850	21.59	11.87	52.80	8.91	1.56
C0720-067-3500-X	0.720	18.29	0.067	1.70	3.500	88.90	2.076	52.72	0.902	22.91	11.87	52.80	8.33	1.45
C0720-072-0750-X	0.720	18.29	0.072	1.83	0.750	19.05	0.494	12.56	0.368	9.35	14.33	63.74	56.06	9.82

FOR INFORMATION ON ALTERNATIVE FINISHES, SEE PAGE 311

Part Numbers with an "*" are squared and not ground.

316 STAINLESS STEEL

Catalog #	Outside Diameter (OD)		Wire Diameter (d)		Free Length (L) Approx		Load Length (L_1)		Solid Height (Sh) Approx		Load (P) at L_1		Spring Rate (R)	
	in	mm	in	mm	in	mm	in	mm	in	mm	lb	N	lb/in	N/mm
C0720-072-0880-X	0.720	18.29	0.072	1.83	0.880	22.35	0.522	13.25	0.365	9.27	14.33	63.74	39.98	7.01
C0720-072-1000-X	0.720	18.29	0.072	1.83	1.000	25.40	0.590	15.00	0.397	10.08	14.33	63.74	34.99	6.13
C0720-072-1250-X	0.720	18.29	0.072	1.83	1.250	31.75	0.759	19.27	0.448	11.38	14.33	63.74	29.16	5.11
C0720-072-1500-X	0.720	18.29	0.072	1.83	1.500	38.10	0.838	21.30	0.554	14.07	14.33	63.74	21.66	3.80
C0720-072-1750-X	0.720	18.29	0.072	1.83	1.750	44.45	0.968	24.59	0.628	15.95	14.33	63.74	18.33	3.20
C0720-072-2000-X	0.720	18.29	0.072	1.83	2.000	50.80	1.140	28.95	0.677	17.20	14.33	63.74	16.66	2.92
C0720-072-2250-X	0.720	18.29	0.072	1.83	2.250	57.15	1.349	34.27	0.751	19.08	14.33	63.74	15.91	2.78
C0720-072-2500-X	0.720	18.29	0.072	1.83	2.500	63.50	1.494	37.95	0.815	20.70	14.33	63.74	14.24	2.49
C0720-072-2750-X	0.720	18.29	0.072	1.83	2.750	69.85	1.633	41.48	0.878	22.30	14.33	63.74	12.83	2.24
C0720-072-3000-X	0.720	18.29	0.072	1.83	3.000	76.20	1.780	45.21	0.942	23.93	14.33	63.74	11.75	2.07
C0720-072-3250-X	0.720	18.29	0.072	1.83	3.250	82.55	1.927	48.94	1.005	25.53	14.33	63.74	10.83	1.89
C0720-072-3500-X	0.720	18.29	0.072	1.83	3.500	88.90	2.067	52.49	1.069	27.15	14.33	63.74	10.00	1.75
C0720-072-4000-X	0.720	18.29	0.072	1.83	4.000	101.60	2.377	60.38	1.182	30.02	14.33	63.74	8.83	1.54
C0720-081-0750-X	0.720	18.29	0.081	2.06	0.750	19.05	0.521	13.22	0.429	10.90	19.78	87.99	86.22	15.10
C0720-081-0880-X	0.720	18.29	0.081	2.06	0.880	22.35	0.600	15.23	0.470	11.94	19.78	87.99	70.56	12.36
C0720-081-1000-X	0.720	18.29	0.081	2.06	1.000	25.40	0.673	17.09	0.508	12.90	19.78	87.99	60.48	10.60
C0720-081-1250-X	0.720	18.29	0.081	2.06	1.250	31.75	0.825	20.96	0.587	14.91	19.78	87.99	46.56	8.16
C0720-081-1500-X	0.720	18.29	0.081	2.06	1.500	38.10	0.978	24.85	0.665	16.89	19.78	87.99	37.90	6.64
C0720-081-1750-X	0.720	18.29	0.081	2.06	1.750	44.45	1.130	28.71	0.744	18.90	19.78	87.99	31.90	5.59
C0720-081-2000-X	0.720	18.29	0.081	2.06	2.000	50.80	1.283	32.58	0.823	20.90	19.78	87.99	27.57	4.83
C0720-081-2250-X	0.720	18.29	0.081	2.06	2.250	57.15	1.434	36.43	0.902	22.91	19.78	87.99	24.24	4.24
C0720-081-2500-X	0.720	18.29	0.081	2.06	2.500	63.50	1.587	40.31	0.981	24.92	19.78	87.99	21.66	3.80
C0720-081-2750-X	0.720	18.29	0.081	2.06	2.750	69.85	1.740	44.19	1.060	26.92	19.78	87.99	19.58	3.43
C0720-081-3000-X	0.720	18.29	0.081	2.06	3.000	76.20	1.891	48.02	1.139	28.93	19.78	87.99	17.83	3.12
C0720-081-3500-X	0.720	18.29	0.081	2.06	3.500	88.90	2.196	55.77	1.297	32.94	19.78	87.99	15.16	2.66
C0720-081-4000-X	0.720	18.29	0.081	2.06	4.000	101.60	2.507	63.68	1.455	36.96	19.78	87.99	13.24	2.31
C0720-085-0750-X	0.720	18.29	0.085	2.16	0.750	19.05	0.553	14.05	0.434	11.02	22.78	101.33	115.79	20.28
C0720-085-0880-X	0.720	18.29	0.085	2.16	0.880	22.35	0.639	16.23	0.474	12.04	22.78	101.33	94.55	16.57
C0720-085-1000-X	0.720	18.29	0.085	2.16	1.000	25.40	0.718	18.25	0.512	13.00	22.78	101.33	80.88	14.17
C0720-085-1250-X	0.720	18.29	0.085	2.16	1.250	31.75	0.883	22.44	0.589	14.96	22.78	101.33	62.14	10.88
C0720-085-1500-X	0.720	18.29	0.085	2.16	1.500	38.10	1.049	26.64	0.666	16.92	22.78	101.33	50.48	8.84
C0720-085-1750-X	0.720	18.29	0.085	2.16	1.750	44.45	1.214	30.83	0.743	18.87	22.78	101.33	42.48	7.44
C0720-085-2000-X	0.720	18.29	0.085	2.16	2.000	50.80	1.379	35.02	0.821	20.85	22.78	101.33	36.65	6.43
C0720-085-2250-X	0.720	18.29	0.085	2.16	2.250	57.15	1.543	39.20	0.898	22.81	22.78	101.33	32.24	5.64
C0720-085-2500-X	0.720	18.29	0.085	2.16	2.500	63.50	1.710	43.43	0.975	24.77	22.78	101.33	28.82	5.04
C0720-085-2750-X	0.720	18.29	0.085	2.16	2.750	69.85	1.874	47.59	1.052	26.72	22.78	101.33	25.99	4.55
C0720-085-3000-X	0.720	18.29	0.085	2.16	3.000	76.20	2.041	51.83	1.130	28.70	22.78	101.33	23.74	4.15
C0720-085-3500-X	0.720	18.29	0.085	2.16	3.500	88.90	2.370	60.20	1.284	32.61	22.78	101.33	20.16	3.54
C0720-085-4000-X	0.720	18.29	0.085	2.16	4.000	101.60	2.698	68.53	1.439	36.55	22.78	101.33	17.49	3.06
C0720-096-0750-X	0.720	18.29	0.096	2.44	0.750	19.05	0.590	15.00	0.490	12.45	31.71	141.05	198.75	34.82
C0720-096-0880-X	0.720	18.29	0.096	2.44	0.880	22.35	0.683	17.36	0.537	13.64	31.71	141.05	161.27	28.25
C0720-096-1000-X	0.720	18.29	0.096	2.44	1.000	25.40	0.769	19.53	0.581	14.76	31.71	141.05	137.28	24.04
C0720-096-1250-X	0.720	18.29	0.096	2.44	1.250	31.75	0.948	24.07	0.671	17.04	31.71	141.05	104.87	18.37
C0720-096-1500-X	0.720	18.29	0.096	2.44	1.500	38.10	1.126	28.60	0.762	19.35	31.71	141.05	84.80	14.85
C0720-096-1750-X	0.720	18.29	0.096	2.44	1.750	44.45	1.305	33.14	0.852	21.64	31.71	141.05	71.22	12.47
C0720-096-2000-X	0.720	18.29	0.096	2.44	2.000	50.80	1.483	37.68	0.943	23.95	31.71	141.05	61.39	10.75
C0720-096-2250-X	0.720	18.29	0.096	2.44	2.250	57.15	1.662	42.20	1.034	26.26	31.71	141.05	53.90	9.44
C0720-096-2500-X	0.720	18.29	0.096	2.44	2.500	63.50	1.840	46.74	1.124	28.55	31.71	141.05	48.06	8.42
C0720-096-2750-X	0.720	18.29	0.096	2.44	2.750	69.85	2.019	51.29	1.215	30.86	31.71	141.05	43.40	7.60
C0720-096-3000-X	0.720	18.29	0.096	2.44	3.000	76.20	2.197	55.80	1.305	33.15	31.71	141.05	39.48	6.92
C0720-096-3500-X	0.720	18.29	0.096	2.44	3.500	88.90	2.555	64.91	1.486	37.74	31.71	141.05	33.57	5.88
C0720-096-4000-X	0.720	18.29	0.096	2.44	4.000	101.60	2.912	73.97	1.668	42.37	31.71	141.05	29.16	5.11
C0720-105-0750-X	0.720	18.29	0.105	2.67	0.750	19.05	0.611	15.51	0.537	13.64	41.15	183.04	295.47	51.75
C0720-105-0880-X	0.720	18.29	0.105	2.67	0.880	22.35	0.707	17.96	0.591	15.01	41.15	183.04	238.15	41.72
C0720-105-1000-X	0.720	18.29	0.105	2.67	1.000	25.40	0.796	20.23	0.640	16.26	41.15	183.04	202.00	35.38
C0720-105-1250-X	0.720	18.29	0.105	2.67	1.250	31.75	0.982	24.94	0.743	18.87	41.15	183.04	153.44	26.86
C0720-105-1500-X	0.720	18.29	0.105	2.67	1.500	38.10	1.167	29.65	0.846	21.49	41.15	183.04	123.70	21.66
C0720-105-1750-X	0.720	18.29	0.105	2.67	1.750	44.45	1.353	34.36	0.949	24.10	41.15	183.04	103.63	18.14
C0720-105-2000-X	0.720	18.29	0.105	2.67	2.000	50.80	1.538	39.07	1.052	26.72	41.15	183.04	89.13	15.60
C0720-105-2250-X	0.720	18.29	0.105	2.67	2.250	57.15	1.724	43.79	1.155	29.34	41.15	183.04	78.22	13.69
C0720-105-2500-X	0.720	18.29	0.105	2.67	2.500	63.50	1.909	48.49	1.258	31.95	41.15	183.04	69.64	12.19
C0720-105-2750-X	0.720	18.29	0.105	2.67	2.750	69.85	2.095	53.21	1.361	34.57	41.15	183.04	62.81	11.00
C0720-105-3000-X	0.720	18.29	0.105	2.67	3.000	76.20	2.281	57.94	1.464	37.19	41.15	183.04	57.23	10.02
C0720-105-3500-X	0.720	18.29	0.105	2.67	3.500	88.90	2.651	67.34	1.670	42.42	41.15	183.04	48.48	8.49

SPEC TO ORDER: WWW.ASRAYMOND.COM OR SEE PHONE & FAX NUMBERS ON THE BACK COVER

Part Numbers with an "*" are squared and not ground.

316 STAINLESS STEEL

Catalog #	Outside Diameter (OD)		Wire Diameter (d)		Free Length (L) Approx		Load Length (L_1)		Solid Height (Sh) Approx		Load (P) at L_1		Spring Rate (R)	
	in	mm	in	mm	in	mm	in	mm	in	mm	lb	N	lb/in	N/mm
C0720-105-4000-X	0.720	18.29	0.105	2.67	4.000	101.60	3.022	76.75	1.876	47.65	41.15	183.04	42.07	7.37
C0720-112-0750-X	0.720	18.29	0.112	2.84	0.750	19.05	0.626	15.90	0.576	14.63	48.36	215.12	390.51	68.39
C0720-112-0880-X	0.720	18.29	0.112	2.84	0.880	22.35	0.726	18.43	0.636	16.15	48.36	215.12	313.12	54.83
C0720-112-1000-X	0.720	18.29	0.112	2.84	1.000	25.40	0.817	20.76	0.691	17.55	48.36	215.12	264.64	46.34
C0720-112-1250-X	0.720	18.29	0.112	2.84	1.250	31.75	1.008	25.61	0.805	20.45	48.36	215.12	200.17	35.06
C0720-112-1500-X	0.720	18.29	0.112	2.84	1.500	38.10	1.200	30.47	0.919	23.34	48.36	215.12	160.94	28.18
C0720-112-1750-X	0.720	18.29	0.112	2.84	1.750	44.45	1.391	35.33	1.034	26.26	48.36	215.12	134.61	23.57
C0720-112-2000-X	0.720	18.29	0.112	2.84	2.000	50.80	1.582	40.18	1.148	29.16	48.36	215.12	115.62	20.24
C0720-112-2250-X	0.720	18.29	0.112	2.84	2.250	57.15	1.773	45.03	1.262	32.05	48.36	215.12	101.38	17.76
C0720-112-2500-X	0.720	18.29	0.112	2.84	2.500	63.50	1.964	49.88	1.376	34.95	48.36	215.12	90.21	15.80
C0720-112-2750-X	0.720	18.29	0.112	2.84	2.750	69.85	2.155	54.74	1.491	37.87	48.36	215.12	81.30	14.24
C0720-112-3000-X	0.720	18.29	0.112	2.84	3.000	76.20	2.346	59.59	1.605	40.77	48.36	215.12	73.97	12.96
C0720-112-3500-X	0.720	18.29	0.112	2.84	3.500	88.90	2.729	69.32	1.834	46.58	48.36	215.12	62.72	10.98
C0720-112-4000-X	0.720	18.29	0.112	2.84	4.000	101.60	3.111	79.02	2.062	52.37	48.36	215.12	54.39	9.53
D22990X	0.728	18.50	0.098	2.50	1.083	27.50	0.861	21.88	0.541	13.75	577.65	129.86	132.02	23.12
D23000X	0.728	18.50	0.098	2.50	1.614	41.00	1.267	32.17	0.738	18.75	577.65	129.86	83.94	14.70
D23010X	0.728	18.50	0.098	2.50	2.402	61.00	1.866	47.40	1.033	26.25	577.65	129.86	54.53	9.55
D23020X	0.728	18.50	0.098	2.50	3.465	88.00	2.676	67.96	1.427	36.25	577.65	129.86	37.00	6.48
D23030X	0.728	18.50	0.098	2.50	5.118	130.00	3.948	100.28	2.018	51.25	577.65	129.86	24.95	4.37
D23280X	0.756	19.20	0.126	3.20	1.083	27.50	0.930	23.61	0.693	17.60	1071.98	240.99	353.57	61.92
D23290X	0.756	19.20	0.126	3.20	1.575	40.00	1.334	33.89	0.945	24.00	1071.98	240.99	225.32	39.46
D23300X	0.756	19.20	0.126	3.20	2.323	59.00	1.952	49.57	1.323	33.60	1071.98	240.99	145.95	25.56
D23310X	0.756	19.20	0.126	3.20	3.287	83.50	2.740	69.59	1.827	46.40	1071.98	240.99	98.90	17.32
D23320X	0.756	19.20	0.126	3.20	4.724	120.00	3.918	99.51	2.583	65.60	1071.98	240.99	67.15	11.76
D23230X	0.787	20.00	0.110	2.80	1.071	27.20	0.850	21.60	0.606	15.40	728.40	163.75	167.02	29.25
D23240X	0.787	20.00	0.110	2.80	1.555	39.50	1.209	30.71	0.827	21.00	728.40	163.75	106.38	18.63
D23250X	0.787	20.00	0.110	2.80	2.528	64.20	1.930	49.01	1.268	32.20	728.40	163.75	61.56	10.78
C0850-068-0750-X	0.850	21.59	0.068	1.73	0.750	19.05	0.396	10.06	0.292	7.42	10.58	47.06	29.90	5.24
C0850-068-0875-X	0.850	21.59	0.068	1.73	0.880	22.35	0.454	11.53	0.317	8.05	10.58	47.06	24.82	4.34
C0850-068-1000-X	0.850	21.59	0.068	1.73	1.000	25.40	0.502	12.75	0.342	8.69	10.58	47.06	21.24	3.71
C0850-068-1250-X	0.850	21.59	0.068	1.73	1.250	31.75	0.609	15.46	0.391	9.93	10.58	47.06	16.49	2.89
C0850-068-1500-X	0.850	21.59	0.068	1.73	1.500	38.10	0.711	18.06	0.441	11.20	10.58	47.06	13.41	2.35
C0850-068-1750-X	0.850	21.59	0.068	1.73	1.750	44.45	0.816	20.73	0.490	12.45	10.58	47.06	11.33	1.98
C0850-068-2000-X	0.850	21.59	0.068	1.73	2.000	50.80	0.924	23.46	0.540	13.72	10.58	47.06	9.83	1.72
C0850-068-2250-X	0.850	21.59	0.068	1.73	2.250	57.15	1.029	26.13	0.590	14.99	10.58	47.06	8.66	1.52
C0850-068-2500-X	0.850	21.59	0.068	1.73	2.500	63.50	1.134	28.81	0.639	16.23	10.58	47.06	7.75	1.37
C0850-068-3000-X	0.850	21.59	0.068	1.73	3.000	76.20	1.351	34.31	0.739	18.77	10.58	47.06	6.41	1.12
C0850-068-3500-X	0.850	21.59	0.068	1.73	3.500	88.90	1.546	39.27	0.838	21.29	10.58	47.06	5.41	0.95
C0850-068-4000-X	0.850	21.59	0.068	1.73	4.000	101.60	1.772	45.01	0.937	23.80	10.58	47.06	4.75	0.84
C0850-074-0875-X	0.850	21.59	0.074	1.88	0.880	22.35	0.483	12.26	0.355	9.02	13.27	59.03	33.40	5.85
C0850-074-1000-X	0.850	21.59	0.074	1.88	1.000	25.40	0.534	13.57	0.384	9.75	13.27	59.03	28.49	4.99
C0850-074-1250-X	0.850	21.59	0.074	1.88	1.250	31.75	0.649	16.48	0.443	11.25	13.27	59.03	22.07	3.87
C0850-074-1500-X	0.850	21.59	0.074	1.88	1.500	38.10	0.763	19.37	0.501	12.73	13.27	59.03	17.99	3.15
C0850-074-2000-X	0.850	21.59	0.074	1.88	2.000	50.80	0.992	25.19	0.618	15.70	13.27	59.03	13.16	2.31
C0850-074-2500-X	0.850	21.59	0.074	1.88	2.500	63.50	1.215	30.87	0.735	18.67	13.27	59.03	10.33	1.80
C0850-074-3000-X	0.850	21.59	0.074	1.88	3.000	76.20	1.438	36.53	0.852	21.64	13.27	59.03	8.50	1.49
C0850-074-3500-X	0.850	21.59	0.074	1.88	3.500	88.90	1.669	42.40	0.969	24.61	13.27	59.03	7.25	1.28
C0850-081-0750-X	0.850	21.59	0.081	2.06	0.750	19.05	0.450	11.43	0.365	9.27	16.91	75.22	56.39	9.88
C0850-081-0875-X	0.850	21.59	0.081	2.06	0.880	22.35	0.516	13.11	0.400	10.16	16.91	75.22	46.48	8.14
C0850-081-1000-X	0.850	21.59	0.081	2.06	1.000	25.40	0.573	14.54	0.435	11.05	16.91	75.22	39.57	6.94
C0850-081-1250-X	0.850	21.59	0.081	2.06	1.250	31.75	0.695	17.66	0.504	12.80	16.91	75.22	30.49	5.34
C0850-081-1500-X	0.850	21.59	0.081	2.06	1.500	38.10	0.816	20.74	0.573	14.55	16.91	75.22	24.74	4.33
C0850-081-1750-X	0.850	21.59	0.081	2.06	1.750	44.45	0.941	23.90	0.642	16.31	16.91	75.22	20.91	3.66
C0850-081-2000-X	0.850	21.59	0.081	2.06	2.000	50.80	1.060	26.92	0.712	18.08	16.91	75.22	17.99	3.15
C0850-081-2250-X	0.850	21.59	0.081	2.06	2.250	57.15	1.187	30.15	0.781	19.84	16.91	75.22	15.91	2.78
C0850-081-2500-X	0.850	21.59	0.081	2.06	2.500	63.50	1.306	33.16	0.850	21.59	16.91	75.22	14.16	2.49
C0850-081-2750-X	0.850	21.59	0.081	2.06	2.750	69.85	1.432	36.36	0.920	23.37	16.91	75.22	12.83	2.24
C0850-081-3000-X	0.850	21.59	0.081	2.06	3.000	76.20	1.550	39.36	0.989	25.12	16.91	75.22	11.66	2.05
C0850-081-3500-X	0.850	21.59	0.081	2.06	3.500	88.90	1.794	45.56	1.127	28.63	16.91	75.22	9.91	1.73
C0850-085-0750-X	0.850	21.59	0.085	2.16	0.750	19.05	0.462	11.74	0.388	9.86	19.49	86.70	67.72	11.86
C0850-085-0875-X	0.850	21.59	0.085	2.16	0.880	22.35	0.530	13.47	0.426	10.82	19.49	86.70	55.73	9.75
C0850-085-1000-X	0.850	21.59	0.085	2.16	1.000	25.40	0.588	14.93	0.463	11.76	19.49	86.70	47.31	8.28
C0850-085-1250-X	0.850	21.59	0.085	2.16	1.250	31.75	0.713	18.12	0.539	13.69	19.49	86.70	36.32	6.36
C0850-085-1500-X	0.850	21.59	0.085	2.16	1.500	38.10	0.839	21.31	0.615	15.62	19.49	86.70	29.49	5.17

FOR INFORMATION ON ALTERNATIVE FINISHES, SEE PAGE 311

Part Numbers with an "*" are squared and not ground.

316 STAINLESS STEEL

Catalog #	Outside Diameter (OD)		Wire Diameter (d)		Free Length (L) Approx		Load Length (L_1)		Solid Height (Sh) Approx		Load (P) at L_1		Spring Rate (R)	
	in	mm	in	mm	in	mm	in	mm	in	mm	lb	N	lb/in	N/mm
C0850-085-1750-X	0.850	21.59	0.085	2.16	1.750	44.45	0.965	24.50	0.690	17.53	19.49	86.70	24.82	4.34
C0850-085-2000-X	0.850	21.59	0.085	2.16	2.000	50.80	1.093	27.76	0.766	19.46	19.49	86.70	21.49	3.77
C0850-085-2250-X	0.850	21.59	0.085	2.16	2.250	57.15	1.219	30.96	0.841	21.36	19.49	86.70	18.91	3.31
C0850-085-2500-X	0.850	21.59	0.085	2.16	2.500	63.50	1.341	34.07	0.917	23.29	19.49	86.70	16.83	2.94
C0850-085-2750-X	0.850	21.59	0.085	2.16	2.750	69.85	1.471	37.37	0.992	25.20	19.49	86.70	15.24	2.66
C0850-085-3000-X	0.850	21.59	0.085	2.16	3.000	76.20	1.599	40.60	1.068	27.13	19.49	86.70	13.91	2.43
C0850-085-3250-X	0.850	21.59	0.085	2.16	3.250	82.55	1.720	43.70	1.144	29.06	19.49	86.70	12.74	2.22
C0850-085-3500-X	0.850	21.59	0.085	2.16	3.500	88.90	1.852	47.04	1.219	30.96	19.49	86.70	11.83	2.07
C0850-085-4000-X	0.850	21.59	0.085	2.16	4.000	101.60	2.097	53.27	1.370	34.80	19.49	86.70	10.25	1.80
C0850-092-0880-X	0.850	21.59	0.092	2.34	0.880	22.35	0.552	14.03	0.471	11.96	24.60	109.43	75.05	13.15
C0850-092-1000-X	0.850	21.59	0.092	2.34	1.000	25.40	0.616	15.64	0.513	13.03	24.60	109.43	64.06	11.23
C0850-092-1250-X	0.850	21.59	0.092	2.34	1.250	31.75	0.748	18.99	0.600	15.24	24.60	109.43	48.98	8.58
C0850-092-1500-X	0.850	21.59	0.092	2.34	1.500	38.10	0.881	22.37	0.686	17.42	24.60	109.43	39.73	6.95
C0850-092-1750-X	0.850	21.59	0.092	2.34	1.750	44.45	1.012	25.69	0.773	19.63	24.60	109.43	33.32	5.83
C0850-092-2000-X	0.850	21.59	0.092	2.34	2.000	50.80	1.144	29.05	0.860	21.84	24.60	109.43	28.74	5.03
C0850-092-2250-X	0.850	21.59	0.092	2.34	2.250	57.15	1.278	32.47	0.947	24.05	24.60	109.43	25.32	4.43
C0850-092-2500-X	0.850	21.59	0.092	2.34	2.500	63.50	1.410	35.82	1.033	26.24	24.60	109.43	22.57	3.96
C0850-092-2750-X	0.850	21.59	0.092	2.34	2.750	69.85	1.539	39.10	1.120	28.45	24.60	109.43	20.33	3.56
C0850-092-3000-X	0.850	21.59	0.092	2.34	3.000	76.20	1.675	42.56	1.207	30.66	24.60	109.43	18.58	3.26
C0850-092-3500-X	0.850	21.59	0.092	2.34	3.500	88.90	1.937	49.20	1.380	35.05	24.60	109.43	15.74	2.75
C0850-098-1000-X	0.850	21.59	0.098	2.49	1.000	25.40	0.649	16.47	0.555	14.10	28.90	128.55	82.22	14.40
C0850-098-1250-X	0.850	21.59	0.098	2.49	1.250	31.75	0.789	20.05	0.651	16.54	28.90	128.55	62.72	10.98
C0850-098-1500-X	0.850	21.59	0.098	2.49	1.500	38.10	0.929	23.61	0.747	18.97	28.90	128.55	50.65	8.88
C0850-098-1750-X	0.850	21.59	0.098	2.49	1.750	44.45	1.071	27.21	0.843	21.41	28.90	128.55	42.57	7.46
C0850-098-2000-X	0.850	21.59	0.098	2.49	2.000	50.80	1.212	30.78	0.940	23.88	28.90	128.55	36.65	6.43
C0850-098-2250-X	0.850	21.59	0.098	2.49	2.250	57.15	1.351	34.32	1.036	26.31	28.90	128.55	32.15	5.64
C0850-098-2500-X	0.850	21.59	0.098	2.49	2.500	63.50	1.492	37.89	1.132	28.75	28.90	128.55	28.66	5.03
C0850-098-2750-X	0.850	21.59	0.098	2.49	2.750	69.85	1.635	41.52	1.229	31.22	28.90	128.55	25.91	4.54
C0850-098-3000-X	0.850	21.59	0.098	2.49	3.000	76.20	1.774	45.07	1.325	33.66	28.90	128.55	23.57	4.13
C0850-098-3500-X	0.850	21.59	0.098	2.49	3.500	88.90	2.055	52.19	1.517	38.53	28.90	128.55	19.99	3.50
D22550X	0.850	21.60	0.063	1.60	1.890	48.00	1.241	31.52	0.346	8.80	145.19	32.64	11.31	1.98
D22560X	0.850	21.60	0.063	1.60	2.894	73.50	1.882	47.80	0.472	12.00	145.19	32.64	7.25	1.27
D22570X	0.850	21.60	0.063	1.60	4.331	110.00	2.764	70.20	0.661	16.80	145.19	32.64	4.68	0.82
D22580X	0.850	21.60	0.063	1.60	6.496	165.00	4.201	106.71	0.913	23.20	145.19	32.64	3.20	0.56
D22590X	0.850	21.60	0.063	1.60	9.449	240.00	5.976	151.78	1.291	32.80	145.19	32.64	2.11	0.37
D22750X	0.866	22.00	0.079	2.00	1.614	41.00	1.128	28.66	0.433	11.00	266.76	59.97	27.75	4.86
D22760X	0.866	22.00	0.079	2.00	2.441	62.00	1.677	42.59	0.591	15.00	266.76	59.97	17.64	3.09
D22770X	0.866	22.00	0.079	2.00	3.701	94.00	2.514	63.86	0.827	21.00	266.76	59.97	11.36	1.99
D22780X	0.866	22.00	0.079	2.00	5.315	135.00	3.579	90.90	1.142	29.00	266.76	59.97	7.77	1.36
D22790X	0.866	22.00	0.079	2.00	7.874	200.00	5.308	134.82	1.614	41.00	266.76	59.97	5.25	0.92
D23040X	0.886	22.50	0.098	2.50	1.417	36.00	1.057	26.86	0.541	13.75	482.01	108.36	67.67	11.85
D23050X	0.886	22.50	0.098	2.50	2.126	54.00	1.560	39.63	0.738	18.75	482.01	108.36	43.05	7.54
D23060X	0.886	22.50	0.098	2.50	3.209	81.50	2.333	59.25	1.033	26.25	482.01	108.36	27.81	4.87
D23070X	0.886	22.50	0.098	2.50	4.724	120.00	3.439	87.36	1.427	36.25	482.01	108.36	18.96	3.32
D23080X	0.886	22.50	0.098	2.50	6.890	175.00	4.985	126.63	2.018	51.25	482.01	108.36	12.79	2.24
D23330X	0.913	23.20	0.126	3.20	1.319	33.50	1.067	27.10	0.693	17.60	905.44	203.55	181.47	31.78
D23340X	0.913	23.20	0.126	3.20	1.949	49.50	1.552	39.41	0.945	24.00	905.44	203.55	115.23	20.18
D23350X	0.913	23.20	0.126	3.20	2.913	74.00	2.300	58.43	1.323	33.60	905.44	203.55	74.63	13.07
D23360X	0.913	23.20	0.126	3.20	4.134	105.00	3.233	82.13	1.827	46.40	905.44	203.55	50.82	8.90
D23370X	0.913	23.20	0.126	3.20	6.102	155.00	3.440	87.38	2.583	65.60	905.44	203.55	17.19	3.01
D22920X	0.945	24.00	0.087	2.20	1.543	39.20	1.026	26.07	0.476	12.10	319.52	71.83	31.23	5.47
D22930X	0.945	24.00	0.087	2.20	2.327	59.10	1.517	38.52	0.650	16.50	319.52	71.83	19.93	3.49
D23530X	0.945	24.00	0.157	4.00	1.319	33.50	1.141	28.99	0.866	22.00	1555.99	349.80	442.71	77.53
D23540X	0.945	24.00	0.157	4.00	1.929	49.00	1.650	41.91	1.181	30.00	1555.99	349.80	281.74	49.34
D23550X	0.945	24.00	0.157	4.00	2.835	72.00	2.404	61.05	1.654	42.00	1555.99	349.80	182.38	31.94
D23560X	0.945	24.00	0.157	4.00	4.134	105.00	3.500	88.90	2.283	58.00	1555.99	349.80	124.08	21.73
D23570X	0.945	24.00	0.157	4.00	5.906	150.00	4.963	126.07	3.228	82.00	1555.99	349.80	83.48	14.62
C0975-074-0750-X	0.975	24.77	0.074	1.88	0.750	19.05	0.399	10.14	0.295	7.49	11.63	51.73	33.15	5.81
C0975-074-0875-X	0.975	24.77	0.074	1.88	0.880	22.35	0.457	11.60	0.317	8.05	11.63	51.73	27.49	4.82
C0975-074-1000-X	0.975	24.77	0.074	1.88	1.000	25.40	0.503	12.78	0.340	8.64	11.63	51.73	23.41	4.10
C0975-074-1250-X	0.975	24.77	0.074	1.88	1.250	31.75	0.606	15.40	0.386	9.80	11.63	51.73	18.08	3.17
C0975-074-1500-X	0.975	24.77	0.074	1.88	1.500	38.10	0.711	18.06	0.431	10.95	11.63	51.73	14.74	2.57
C0975-074-2000-X	0.975	24.77	0.074	1.88	2.000	50.80	0.917	23.30	0.522	13.26	11.63	51.73	10.75	1.89
C0975-074-2500-X	0.975	24.77	0.074	1.88	2.500	63.50	1.131	28.72	0.613	15.57	11.63	51.73	8.50	1.49

Part Numbers with an "*" are squared and not ground.

316 STAINLESS STEEL

Catalog #	Outside Diameter (OD)		Wire Diameter (d)		Free Length (L) Approx		Load Length (L_1)		Solid Height (Sh) Approx		Load (P) at L_1		Spring Rate (R)	
	in	mm	in	mm	in	mm	in	mm	in	mm	lb	N	lb/in	N/mm
C0975-074-3000-X	0.975	24.77	0.074	1.88	3.000	76.20	1.337	33.97	0.704	17.88	11.63	51.73	7.00	1.23
C0975-074-3500-X	0.975	24.77	0.074	1.88	3.500	88.90	1.533	38.94	0.795	20.19	11.63	51.73	5.91	1.03
C0975-074-4000-X	0.975	24.77	0.074	1.88	4.000	101.60	1.748	44.39	0.886	22.50	11.63	51.73	5.16	0.91
C0975-085-0875-X	0.975	24.77	0.085	2.16	0.880	22.35	0.498	12.65	0.381	9.68	17.11	76.11	44.82	7.85
C0975-085-1000-X	0.975	24.77	0.085	2.16	1.000	25.40	0.550	13.98	0.411	10.44	17.11	76.11	38.07	6.67
C0975-085-1250-X	0.975	24.77	0.085	2.16	1.250	31.75	0.665	16.88	0.470	11.94	17.11	76.11	29.24	5.11
C0975-085-1500-X	0.975	24.77	0.085	2.16	1.500	38.10	0.779	19.79	0.530	13.46	17.11	76.11	23.74	4.15
C0975-085-2000-X	0.975	24.77	0.085	2.16	2.000	50.80	1.008	25.59	0.649	16.48	17.11	76.11	17.24	3.01
C0975-085-2500-X	0.975	24.77	0.085	2.16	2.500	63.50	1.240	31.49	0.769	19.53	17.11	76.11	13.58	2.38
C0975-085-3000-X	0.975	24.77	0.085	2.16	3.000	76.20	1.467	37.26	0.888	22.56	17.11	76.11	11.16	1.96
C0975-085-3500-X	0.975	24.77	0.085	2.16	3.500	88.90	1.698	43.13	1.007	25.58	17.11	76.11	9.50	1.66
C0975-092-0875-X	0.975	24.77	0.092	2.34	0.880	22.35	0.520	13.20	0.421	10.69	21.62	96.17	59.98	10.51
C0975-092-1000-X	0.975	24.77	0.092	2.34	1.000	25.40	0.575	14.59	0.456	11.58	21.62	96.17	50.81	8.90
C0975-092-1250-X	0.975	24.77	0.092	2.34	1.250	31.75	0.694	17.64	0.525	13.34	21.62	96.17	38.90	6.81
C0975-092-1500-X	0.975	24.77	0.092	2.34	1.500	38.10	0.814	20.66	0.594	15.09	21.62	96.17	31.49	5.52
C0975-092-2000-X	0.975	24.77	0.092	2.34	2.000	50.80	1.053	26.74	0.732	18.59	21.62	96.17	22.82	3.99
C0975-092-2500-X	0.975	24.77	0.092	2.34	2.500	63.50	1.293	32.84	0.871	22.12	21.62	96.17	17.91	3.13
C0975-092-3000-X	0.975	24.77	0.092	2.34	3.000	76.20	1.534	38.96	1.009	25.63	21.62	96.17	14.74	2.57
C0975-092-3500-X	0.975	24.77	0.092	2.34	3.500	88.90	1.770	44.96	1.147	29.13	21.62	96.17	12.50	2.19
C0975-092-4000-X	0.975	24.77	0.092	2.34	4.000	101.60	2.004	50.90	1.286	32.66	21.62	96.17	10.83	1.89
C0975-096-0875-X	0.975	24.77	0.096	2.44	0.880	22.35	0.541	13.74	0.444	11.28	23.91	106.36	70.47	12.35
C0975-096-1000-X	0.975	24.77	0.096	2.44	1.000	25.40	0.599	15.20	0.481	12.22	23.91	106.36	59.56	10.44
C0975-096-1250-X	0.975	24.77	0.096	2.44	1.250	31.75	0.724	18.40	0.556	14.12	23.91	106.36	45.48	7.97
C0975-096-1500-X	0.975	24.77	0.096	2.44	1.500	38.10	0.851	21.61	0.631	16.03	23.91	106.36	36.82	6.44
C0975-096-2000-X	0.975	24.77	0.096	2.44	2.000	50.80	1.100	27.95	0.780	19.81	23.91	106.36	26.57	4.66
C0975-096-2500-X	0.975	24.77	0.096	2.44	2.500	63.50	1.352	34.34	0.930	23.62	23.91	106.36	20.83	3.64
C0975-096-3000-X	0.975	24.77	0.096	2.44	3.000	76.20	1.607	40.81	1.079	27.41	23.91	106.36	17.16	3.01
C0975-096-3500-X	0.975	24.77	0.096	2.44	3.500	88.90	1.860	47.24	1.228	31.19	23.91	106.36	14.58	2.56
C0975-105-0880-X	0.975	24.77	0.105	2.67	0.880	22.35	0.566	14.38	0.496	12.60	31.12	138.43	99.21	17.37
C0975-105-1000-X	0.975	24.77	0.105	2.67	1.000	25.40	0.630	16.00	0.538	13.67	31.12	138.43	84.13	14.73
C0975-105-1250-X	0.975	24.77	0.105	2.67	1.250	31.75	0.763	19.38	0.626	15.90	31.12	138.43	63.89	11.19
C0975-105-1500-X	0.975	24.77	0.105	2.67	1.500	38.10	0.895	22.75	0.713	18.11	31.12	138.43	51.48	9.02
C0975-105-1750-X	0.975	24.77	0.105	2.67	1.750	44.45	1.029	26.13	0.800	20.32	31.12	138.43	43.15	7.57
C0975-105-2000-X	0.975	24.77	0.105	2.67	2.000	50.80	1.162	29.52	0.888	22.56	31.12	138.43	37.15	6.51
C0975-105-2250-X	0.975	24.77	0.105	2.67	2.250	57.15	1.295	32.88	0.975	24.77	31.12	138.43	32.57	5.71
C0975-105-2500-X	0.975	24.77	0.105	2.67	2.500	63.50	1.426	36.23	1.062	26.97	31.12	138.43	28.99	5.08
C0975-105-2750-X	0.975	24.77	0.105	2.67	2.750	69.85	1.560	39.63	1.149	29.18	31.12	138.43	26.16	4.59
C0975-105-3000-X	0.975	24.77	0.105	2.67	3.000	76.20	1.694	43.02	1.237	31.42	31.12	138.43	23.82	4.17
C0975-105-3500-X	0.975	24.77	0.105	2.67	3.500	88.90	1.963	49.85	1.411	35.84	31.12	138.43	20.24	3.54
C0975-105-4000-X	0.975	24.77	0.105	2.67	4.000	101.60	2.229	56.63	1.586	40.28	31.12	138.43	17.58	3.08
C0975-112-0880-X	0.975	24.77	0.112	2.84	0.880	22.35	0.595	15.12	0.535	13.59	36.67	163.12	128.87	22.57
C0975-112-1000-X	0.975	24.77	0.112	2.84	1.000	25.40	0.663	16.85	0.581	14.76	36.67	163.12	108.96	19.09
C0975-112-1250-X	0.975	24.77	0.112	2.84	1.250	31.75	0.805	20.44	0.679	17.25	36.67	163.12	82.38	14.43
C0975-112-1500-X	0.975	24.77	0.112	2.84	1.500	38.10	0.946	24.03	0.776	19.71	36.67	163.12	66.22	11.59
C0975-112-2000-X	0.975	24.77	0.112	2.84	2.000	50.80	1.229	31.22	0.970	24.64	36.67	163.12	47.56	8.34
C0975-112-2500-X	0.975	24.77	0.112	2.84	2.500	63.50	1.513	38.43	1.164	29.57	36.67	163.12	37.15	6.51
C0975-112-3000-X	0.975	24.77	0.112	2.84	3.000	76.20	1.797	45.65	1.358	34.49	36.67	163.12	30.49	5.34
C0975-112-3500-X	0.975	24.77	0.112	2.84	3.500	88.90	2.080	52.83	1.553	39.45	36.67	163.12	25.82	4.52
C0975-125-0880-X	0.975	24.77	0.125	3.18	0.880	22.35	0.646	16.42	0.602	15.29	47.98	213.43	205.42	35.97
C0975-125-1000-X	0.975	24.77	0.125	3.18	1.000	25.40	0.722	18.34	0.657	16.69	47.98	213.43	172.60	30.23
C0975-125-1250-X	0.975	24.77	0.125	3.18	1.250	31.75	0.879	22.34	0.772	19.61	47.98	213.43	129.45	22.68
C0975-125-1500-X	0.975	24.77	0.125	3.18	1.500	38.10	1.037	26.33	0.887	22.53	47.98	213.43	103.54	18.13
C0975-125-1750-X	0.975	24.77	0.125	3.18	1.750	44.45	1.194	30.33	1.002	25.45	47.98	213.43	86.30	15.11
C0975-125-2000-X	0.975	24.77	0.125	3.18	2.000	50.80	1.351	34.33	1.117	28.37	47.98	213.43	73.97	12.96
C0975-125-2250-X	0.975	24.77	0.125	3.18	2.250	57.15	1.509	38.32	1.232	31.29	47.98	213.43	64.72	11.33
C0975-125-2500-X	0.975	24.77	0.125	3.18	2.500	63.50	1.667	42.33	1.347	34.21	47.98	213.43	57.56	10.09
C0975-125-2750-X	0.975	24.77	0.125	3.18	2.750	69.85	1.824	46.33	1.462	37.13	47.98	213.43	51.81	9.07
C0975-125-3000-X	0.975	24.77	0.125	3.18	3.000	76.20	1.981	50.31	1.577	40.06	47.98	213.43	47.06	8.25
C0975-125-3500-X	0.975	24.77	0.125	3.18	3.500	88.90	2.295	58.30	1.807	45.90	47.98	213.43	39.82	6.97
C0975-125-4000-X	0.975	24.77	0.125	3.18	4.000	101.60	2.609	66.26	2.037	51.74	47.98	213.43	34.49	6.04
C0975-135-0880-X	0.975	24.77	0.135	3.43	0.880	22.35	0.678	17.22	0.643	16.33	60.04	267.07	297.05	52.03
C0975-135-1000-X	0.975	24.77	0.135	3.43	1.000	25.40	0.758	19.26	0.703	17.86	60.04	267.07	248.23	43.47
C0975-135-1500-X	0.975	24.77	0.135	3.43	1.500	38.10	1.092	27.75	0.953	24.21	60.04	267.07	147.27	25.80
C0975-135-2000-X	0.975	24.77	0.135	3.43	2.000	50.80	1.427	36.24	1.203	30.56	60.04	267.07	104.71	18.34

FOR INFORMATION ON ALTERNATIVE FINISHES, SEE PAGE 311

Part Numbers with an "*" are squared and not ground.

316 STAINLESS STEEL

Catalog #	Outside Diameter (OD)		Wire Diameter (d)		Free Length (L) Approx		Load Length (L_1)		Solid Height (Sh) Approx		Load (P) at L_1		Spring Rate (R)	
	in	mm	in	mm	in	mm	in	mm	in	mm	lb	N	lb/in	N/mm
C0975-135-2500-X	0.975	24.77	0.135	3.43	2.500	63.50	1.761	44.72	1.453	36.91	60.04	267.07	81.22	14.22
C0975-135-3000-X	0.975	24.77	0.135	3.43	3.000	76.20	2.096	53.23	1.703	43.26	60.04	267.07	66.39	11.63
C0975-135-3500-X	0.975	24.77	0.135	3.43	3.500	88.90	2.429	61.70	1.953	49.61	60.04	267.07	56.06	9.82
C0975-135-4000-X	0.975	24.77	0.135	3.43	4.000	101.60	2.764	70.20	2.203	55.96	60.04	267.07	48.56	8.51
C0975-148-1000-X	0.975	24.77	0.148	3.76	1.000	25.40	0.795	20.19	0.763	19.38	78.39	348.70	382.35	66.97
C0975-148-1500-X	0.975	24.77	0.148	3.76	1.500	38.10	1.149	29.19	1.042	26.47	78.39	348.70	223.58	39.16
C0975-148-2000-X	0.975	24.77	0.148	3.76	2.000	50.80	1.504	38.19	1.322	33.58	78.39	348.70	157.94	27.65
C0975-148-2500-X	0.975	24.77	0.148	3.76	2.500	63.50	1.858	47.20	1.601	40.67	78.39	348.70	122.12	21.38
C0975-148-3000-X	0.975	24.77	0.148	3.76	3.000	76.20	2.213	56.20	1.880	47.75	78.39	348.70	99.54	17.43
C0975-148-3500-X	0.975	24.77	0.148	3.76	3.500	88.90	2.567	65.21	2.159	54.84	78.39	348.70	84.05	14.73
C0975-148-4000-X	0.975	24.77	0.148	3.76	4.000	101.60	2.921	74.19	2.439	61.95	78.39	348.70	72.64	12.71
C0975-162-1500-X	0.975	24.77	0.162	4.11	1.500	38.10	1.214	30.83	1.124	28.55	98.98	440.28	345.86	60.58
C0975-162-2000-X	0.975	24.77	0.162	4.11	2.000	50.80	1.592	40.44	1.430	36.32	98.98	440.28	242.65	42.50
C0975-162-2500-X	0.975	24.77	0.162	4.11	2.500	63.50	1.971	50.05	1.735	44.07	98.98	440.28	186.93	32.73
C0975-162-3000-X	0.975	24.77	0.162	4.11	3.000	76.20	2.349	59.66	2.041	51.84	98.98	440.28	152.02	26.62
C0975-162-3500-X	0.975	24.77	0.162	4.11	3.500	88.90	2.727	69.26	2.347	59.61	98.98	440.28	128.03	22.42
C0975-162-4000-X	0.975	24.77	0.162	4.11	4.000	101.60	3.105	78.87	2.652	67.36	98.98	440.28	110.62	19.37
D22800X	1.063	27.00	0.079	2.00	2.283	58.00	1.501	38.13	0.433	11.00	219.21	49.28	14.16	2.48
D22810X	1.063	27.00	0.079	2.00	3.484	88.50	2.256	57.31	0.591	15.00	219.21	49.28	9.02	1.58
D22820X	1.063	27.00	0.079	2.00	5.315	135.00	3.413	86.69	0.827	21.00	219.21	49.28	5.82	1.02
D22830X	1.063	27.00	0.079	2.00	7.677	195.00	4.865	123.58	1.142	29.00	219.21	49.28	3.94	0.69
D22840X	1.063	27.00	0.079	2.00	11.417	290.00	7.289	185.15	1.614	41.00	219.21	49.28	2.68	0.47
D23090X	1.083	27.50	0.098	2.50	1.929	49.00	1.348	34.23	0.541	13.75	398.78	89.65	34.66	6.07
D23100X	1.083	27.50	0.098	2.50	2.933	74.50	2.021	51.33	0.738	18.75	398.78	89.65	22.10	3.87
D23110X	1.083	27.50	0.098	2.50	4.528	115.00	3.116	79.14	1.033	26.25	398.78	89.65	14.28	2.50
D23120X	1.083	27.50	0.098	2.50	6.496	165.00	4.420	112.26	1.427	36.25	398.78	89.65	9.71	1.70
D23130X	1.083	27.50	0.098	2.50	9.449	240.00	6.380	162.04	2.018	51.25	398.78	89.65	6.57	1.15
C1100-085-0875-X	1.100	27.94	0.085	2.16	0.880	22.35	0.474	12.05	0.348	8.84	15.24	67.79	37.57	6.58
C1100-085-1000-X	1.100	27.94	0.085	2.16	1.000	25.40	0.522	13.26	0.372	9.45	15.24	67.79	31.90	5.59
C1100-085-1250-X	1.100	27.94	0.085	2.16	1.250	31.75	0.630	15.99	0.420	10.67	15.24	67.79	24.57	4.31
C1100-085-1500-X	1.100	27.94	0.085	2.16	1.500	38.10	0.734	18.65	0.467	11.86	15.24	67.79	19.91	3.49
C1100-085-2000-X	1.100	27.94	0.085	2.16	2.000	50.80	0.948	24.09	0.563	14.30	15.24	67.79	14.49	2.54
C1100-085-2500-X	1.100	27.94	0.085	2.16	2.500	63.50	1.164	29.57	0.659	16.74	15.24	67.79	11.41	2.00
C1100-085-3000-X	1.100	27.94	0.085	2.16	3.000	76.20	1.366	34.70	0.755	19.18	15.24	67.79	9.33	1.63
C1100-085-3500-X	1.100	27.94	0.085	2.16	3.500	88.90	1.594	40.48	0.851	21.62	15.24	67.79	8.00	1.40
C1100-085-4000-X	1.100	27.94	0.085	2.16	4.000	101.60	1.795	45.60	0.947	24.05	15.24	67.79	6.91	1.21
C1100-085-4500-X	1.100	27.94	0.085	2.16	4.500	114.30	1.993	50.62	1.043	26.49	15.24	67.79	6.08	1.07
C1100-085-5000-X	1.100	27.94	0.085	2.16	5.000	127.00	2.227	56.57	1.139	28.93	15.24	67.79	5.50	0.96
C1100-096-0875-X	1.100	27.94	0.096	2.44	0.880	22.35	0.513	13.04	0.406	10.31	21.32	94.84	58.14	10.17
C1100-096-1000-X	1.100	27.94	0.096	2.44	1.000	25.40	0.566	14.38	0.436	11.07	21.32	94.84	49.15	8.62
C1100-096-1250-X	1.100	27.94	0.096	2.44	1.250	31.75	0.683	17.34	0.497	12.62	21.32	94.84	37.57	6.58
C1100-096-1500-X	1.100	27.94	0.096	2.44	1.500	38.10	0.799	20.29	0.558	14.17	21.32	94.84	30.40	5.32
C1100-096-2000-X	1.100	27.94	0.096	2.44	2.000	50.80	1.031	26.18	0.679	17.25	21.32	94.84	21.99	3.85
C1100-096-2500-X	1.100	27.94	0.096	2.44	2.500	63.50	1.264	32.10	0.800	20.32	21.32	94.84	17.24	3.01
C1100-096-3000-X	1.100	27.94	0.096	2.44	3.000	76.20	1.495	37.96	0.922	23.42	21.32	94.84	14.16	2.49
C1100-096-3500-X	1.100	27.94	0.096	2.44	3.500	88.90	1.723	43.76	1.043	26.49	21.32	94.84	12.00	2.10
C1100-096-4000-X	1.100	27.94	0.096	2.44	4.000	101.60	1.953	49.60	1.165	29.59	21.32	94.84	10.41	1.82
C1100-096-4500-X	1.100	27.94	0.096	2.44	4.500	114.30	2.194	55.74	1.286	32.66	21.32	94.84	9.25	1.63
C1100-105-0875-X	1.100	27.94	0.105	2.67	0.880	22.35	0.539	13.68	0.453	11.51	27.77	123.53	81.38	14.26
C1100-105-1000-X	1.100	27.94	0.105	2.67	1.000	25.40	0.594	15.10	0.489	12.42	27.77	123.53	68.47	12.00
C1100-105-1250-X	1.100	27.94	0.105	2.67	1.250	31.75	0.717	18.20	0.561	14.25	27.77	123.53	52.06	9.12
C1100-105-1500-X	1.100	27.94	0.105	2.67	1.500	38.10	0.838	21.30	0.632	16.05	27.77	123.53	41.98	7.36
C1100-105-2000-X	1.100	27.94	0.105	2.67	2.000	50.80	1.082	27.47	0.776	19.71	27.77	123.53	30.24	5.29
C1100-105-2500-X	1.100	27.94	0.105	2.67	2.500	63.50	1.326	33.68	0.919	23.34	27.77	123.53	23.66	4.15
C1100-105-3000-X	1.100	27.94	0.105	2.67	3.000	76.20	1.569	39.86	1.062	26.97	27.77	123.53	19.41	3.40
C1100-105-3500-X	1.100	27.94	0.105	2.67	3.500	88.90	1.808	45.91	1.206	30.63	27.77	123.53	16.41	2.87
C1100-112-0875-X	1.100	27.94	0.112	2.84	0.880	22.35	0.567	14.40	0.489	12.42	32.75	145.68	104.54	18.30
C1100-112-1000-X	1.100	27.94	0.112	2.84	1.000	25.40	0.627	15.92	0.530	13.46	32.75	145.68	87.71	15.36
C1100-112-1250-X	1.100	27.94	0.112	2.84	1.250	31.75	0.756	19.21	0.610	15.49	32.75	145.68	66.31	11.61
C1100-112-1500-X	1.100	27.94	0.112	2.84	1.500	38.10	0.886	22.50	0.690	17.53	32.75	145.68	53.31	9.33
C1100-112-1750-X	1.100	27.94	0.112	2.84	1.750	44.45	1.015	25.79	0.771	19.58	32.75	145.68	44.57	7.81
C1100-112-2000-X	1.100	27.94	0.112	2.84	2.000	50.80	1.145	29.09	0.851	21.62	32.75	145.68	38.32	6.71
C1100-112-2250-X	1.100	27.94	0.112	2.84	2.250	57.15	1.274	32.37	0.932	23.67	32.75	145.68	33.57	5.88
C1100-112-2500-X	1.100	27.94	0.112	2.84	2.500	63.50	1.405	35.68	1.012	25.70	32.75	145.68	29.90	5.24

Part Numbers with an "*" are squared and not ground.

316 STAINLESS STEEL

Catalog #	Outside Diameter (OD)		Wire Diameter (d)		Free Length (L) Approx		Load Length (L_1)		Solid Height (Sh) Approx		Load (P) at L_1		Spring Rate (R)	
	in	mm	in	mm	in	mm	in	mm	in	mm	lb	N	lb/in	N/mm
C1100-112-3000-X	1.100	27.94	0.112	2.84	3.000	76.20	1.663	42.24	1.173	29.79	32.75	145.68	24.49	4.29
C1100-112-3500-X	1.100	27.94	0.112	2.84	3.500	88.90	1.921	48.80	1.333	33.86	32.75	145.68	20.74	3.63
C1100-112-4000-X	1.100	27.94	0.112	2.84	4.000	101.60	2.180	55.37	1.494	37.95	32.75	145.68	17.99	3.15
C1100-112-4500-X	1.100	27.94	0.112	2.84	4.500	114.30	2.442	62.02	1.655	42.04	32.75	145.68	15.91	2.78
C1100-125-0880-X	1.100	27.94	0.125	3.18	0.880	22.35	0.615	15.62	0.556	14.12	42.90	190.83	161.85	28.35
C1100-125-1000-X	1.100	27.94	0.125	3.18	1.000	25.40	0.684	17.38	0.603	15.32	42.90	190.83	135.95	23.82
C1100-125-1250-X	1.100	27.94	0.125	3.18	1.250	31.75	0.829	21.06	0.699	17.75	42.90	190.83	101.96	17.86
C1100-125-1500-X	1.100	27.94	0.125	3.18	1.500	38.10	0.974	24.74	0.796	20.22	42.90	190.83	81.55	14.29
C1100-125-1750-X	1.100	27.94	0.125	3.18	1.750	44.45	1.119	28.42	0.893	22.68	42.90	190.83	67.97	11.91
C1100-125-2000-X	1.100	27.94	0.125	3.18	2.000	50.80	1.263	32.09	0.989	25.12	42.90	190.83	58.23	10.19
C1100-125-2250-X	1.100	27.94	0.125	3.18	2.250	57.15	1.408	35.77	1.086	27.58	42.90	190.83	50.98	8.93
C1100-125-2500-X	1.100	27.94	0.125	3.18	2.500	63.50	1.553	39.45	1.183	30.05	42.90	190.83	45.32	7.93
C1100-125-3000-X	1.100	27.94	0.125	3.18	3.000	76.20	1.843	46.80	1.376	34.95	42.90	190.83	37.07	6.50
C1100-125-3500-X	1.100	27.94	0.125	3.18	3.500	88.90	2.134	54.20	1.569	39.85	42.90	190.83	31.40	5.50
C1100-125-4000-X	1.100	27.94	0.125	3.18	4.000	101.60	2.420	61.47	1.763	44.78	42.90	190.83	27.16	4.76
C1100-125-4500-X	1.100	27.94	0.125	3.18	4.500	114.30	2.712	68.88	1.956	49.68	42.90	190.83	23.99	4.20
C1100-135-1500-X	1.100	27.94	0.135	3.43	1.500	38.10	1.017	25.84	0.874	22.20	53.75	239.09	111.37	19.51
C1100-135-2000-X	1.100	27.94	0.135	3.43	2.000	50.80	1.321	33.57	1.092	27.74	53.75	239.09	79.22	13.87
C1100-135-2500-X	1.100	27.94	0.135	3.43	2.500	63.50	1.626	41.29	1.310	33.27	53.75	239.09	61.48	10.77
C1100-135-3000-X	1.100	27.94	0.135	3.43	3.000	76.20	1.930	49.02	1.528	38.81	53.75	239.09	50.23	8.79
C1100-135-3500-X	1.100	27.94	0.135	3.43	3.500	88.90	2.232	56.70	1.746	44.35	53.75	239.09	42.40	7.43
C1100-135-4000-X	1.100	27.94	0.135	3.43	4.000	101.60	2.537	64.44	1.964	49.89	53.75	239.09	36.74	6.43
C1100-135-4500-X	1.100	27.94	0.135	3.43	4.500	114.30	2.841	72.17	2.182	55.42	53.75	239.09	32.40	5.67
C1100-135-5000-X	1.100	27.94	0.135	3.43	5.000	127.00	3.146	79.90	2.400	60.96	53.75	239.09	28.99	5.08
D23380X	1.110	28.20	0.126	3.20	1.673	42.50	1.259	31.99	0.693	17.60	756.29	170.02	92.39	16.18
D23390X	1.110	28.20	0.126	3.20	2.500	63.50	1.850	46.99	0.945	24.00	756.29	170.02	58.81	10.30
D23400X	1.110	28.20	0.126	3.20	3.720	94.50	2.719	69.05	1.323	33.60	756.29	170.02	38.14	6.68
D23410X	1.110	28.20	0.126	3.20	5.315	135.00	3.841	97.55	1.827	46.40	756.29	170.02	25.92	4.54
D23420X	1.110	28.20	0.126	3.20	7.874	200.00	5.694	144.62	2.583	65.60	756.29	170.02	17.53	3.07
D23580X	1.142	29.00	0.157	4.00	1.614	41.00	1.321	33.56	0.866	22.00	1314.23	295.45	226.69	39.70
D23590X	1.142	29.00	0.157	4.00	2.382	60.50	1.921	48.79	1.181	30.00	1314.23	295.45	144.12	25.24
D23600X	1.142	29.00	0.157	4.00	3.524	89.50	2.812	71.42	1.654	42.00	1314.23	295.45	93.30	16.34
D23610X	1.142	29.00	0.157	4.00	5.118	130.00	4.071	103.41	2.283	58.00	1314.23	295.45	63.44	11.11
D23620X	1.142	29.00	0.157	4.00	7.283	185.00	5.735	145.66	3.228	82.00	1314.23	295.45	42.88	7.51
D23260X	1.181	30.00	0.110	2.80	1.850	47.00	1.253	31.83	0.606	15.40	499.31	112.25	42.26	7.40
D23270X	1.181	30.00	0.110	2.80	2.783	70.70	1.845	46.87	0.827	21.00	499.31	112.25	26.89	4.71
D23780X	1.181	30.00	0.197	5.00	1.614	41.00	1.413	35.89	1.083	27.50	2209.30	496.67	555.08	97.21
D23790X	1.181	30.00	0.197	5.00	2.362	60.00	2.045	51.95	1.476	37.50	2209.30	496.67	352.20	61.68
D23800X	1.181	30.00	0.197	5.00	3.445	87.50	2.954	75.04	2.067	52.50	2209.30	496.67	227.66	39.87
D23810X	1.181	30.00	0.197	5.00	4.921	125.00	4.201	106.71	2.854	72.50	2209.30	496.67	155.03	27.15
D23820X	1.181	30.00	0.197	5.00	7.087	180.00	6.018	152.86	4.035	102.50	2209.30	496.67	104.50	18.30
C1225-085-0875-X	1.225	31.12	0.085	2.16	0.880	22.35	0.429	10.90	0.330	8.38	13.74	61.12	30.49	5.34
C1225-085-1000-X	1.225	31.12	0.085	2.16	1.000	25.40	0.470	11.93	0.351	8.92	13.74	61.12	25.91	4.54
C1225-085-1500-X	1.225	31.12	0.085	2.16	1.500	38.10	0.650	16.50	0.434	11.02	13.74	61.12	16.16	2.84
C1225-085-2000-X	1.225	31.12	0.085	2.16	2.000	50.80	0.830	21.08	0.518	13.16	13.74	61.12	11.75	2.07
C1225-085-2500-X	1.225	31.12	0.085	2.16	2.500	63.50	1.014	25.75	0.601	15.27	13.74	61.12	9.25	1.63
C1225-085-3000-X	1.225	31.12	0.085	2.16	3.000	76.20	1.187	30.15	0.684	17.37	13.74	61.12	7.58	1.33
C1225-085-3500-X	1.225	31.12	0.085	2.16	3.500	88.90	1.385	35.18	0.768	19.51	13.74	61.12	6.50	1.14
C1225-085-4000-X	1.225	31.12	0.085	2.16	4.000	101.60	1.538	39.06	0.851	21.62	13.74	61.12	5.58	0.98
C1225-085-4500-X	1.225	31.12	0.085	2.16	4.500	114.30	1.751	44.46	0.934	23.72	13.74	61.12	5.00	0.88
C1225-085-5000-X	1.225	31.12	0.085	2.16	5.000	127.00	1.887	47.94	1.018	25.86	13.74	61.12	4.41	0.77
C1225-096-0875-X	1.225	31.12	0.096	2.44	0.880	22.35	0.493	12.51	0.377	9.58	19.23	85.54	49.65	8.70
C1225-096-1000-X	1.225	31.12	0.096	2.44	1.000	25.40	0.542	13.77	0.402	10.21	19.23	85.54	41.98	7.36
C1225-096-1250-X	1.225	31.12	0.096	2.44	1.250	31.75	0.650	16.52	0.452	11.48	19.23	85.54	32.07	5.62
C1225-096-1500-X	1.225	31.12	0.096	2.44	1.500	38.10	0.758	19.25	0.502	12.75	19.23	85.54	25.91	4.54
C1225-096-1750-X	1.225	31.12	0.096	2.44	1.750	44.45	0.866	21.98	0.552	14.02	19.23	85.54	21.74	3.80
C1225-096-2000-X	1.225	31.12	0.096	2.44	2.000	50.80	0.974	24.74	0.602	15.29	19.23	85.54	18.74	3.27
C1225-096-2250-X	1.225	31.12	0.096	2.44	2.250	57.15	1.084	27.54	0.652	16.56	19.23	85.54	16.49	2.89
C1225-096-2500-X	1.225	31.12	0.096	2.44	2.500	63.50	1.188	30.18	0.702	17.83	19.23	85.54	14.66	2.57
C1225-096-2750-X	1.225	31.12	0.096	2.44	2.750	69.85	1.298	32.97	0.752	19.10	19.23	85.54	13.24	2.31
C1225-096-3000-X	1.225	31.12	0.096	2.44	3.000	76.20	1.408	35.76	0.802	20.37	19.23	85.54	12.08	2.12
C1225-096-3500-X	1.225	31.12	0.096	2.44	3.500	88.90	1.623	41.23	0.902	22.91	19.23	85.54	10.25	1.80
C1225-096-4000-X	1.225	31.12	0.096	2.44	4.000	101.60	1.843	46.80	1.002	25.45	19.23	85.54	8.91	1.56
C1225-096-4500-X	1.225	31.12	0.096	2.44	4.500	114.30	2.070	52.58	1.102	27.99	19.23	85.54	7.91	1.38

FOR INFORMATION ON ALTERNATIVE FINISHES, SEE PAGE 311

Part Numbers with an "*" are squared and not ground.

316 STAINLESS STEEL

Catalog #	Outside Diameter (OD)		Wire Diameter (d)		Free Length (L) Approx		Load Length (L_1)		Solid Height (Sh) Approx		Load (P) at L_1		Spring Rate (R)	
	in	mm	in	mm	in	mm	in	mm	in	mm	lb	N	lb/in	N/mm
C1225-096-5000-X	1.225	31.12	0.096	2.44	5.000	127.00	2.284	58.02	1.202	30.53	19.23	85.54	7.08	1.24
C1225-105-0875-X	1.225	31.12	0.105	2.67	0.880	22.35	0.515	13.09	0.421	10.69	25.07	111.52	68.72	12.03
C1225-105-1000-X	1.225	31.12	0.105	2.67	1.000	25.40	0.567	14.40	0.450	11.43	25.07	111.52	57.89	10.14
C1225-105-1250-X	1.225	31.12	0.105	2.67	1.250	31.75	0.680	17.27	0.510	12.95	25.07	111.52	43.98	7.71
C1225-105-1500-X	1.225	31.12	0.105	2.67	1.500	38.10	0.792	20.12	0.569	14.45	25.07	111.52	35.40	6.20
C1225-105-2000-X	1.225	31.12	0.105	2.67	2.000	50.80	1.020	25.90	0.688	17.48	25.07	111.52	25.57	4.48
C1225-105-2500-X	1.225	31.12	0.105	2.67	2.500	63.50	1.246	31.65	0.807	20.50	25.07	111.52	19.99	3.50
C1225-105-3000-X	1.225	31.12	0.105	2.67	3.000	76.20	1.472	37.40	0.926	23.52	25.07	111.52	16.41	2.87
C1225-105-3500-X	1.225	31.12	0.105	2.67	3.500	88.90	1.698	43.13	1.045	26.54	25.07	111.52	13.91	2.43
C1225-105-4000-X	1.225	31.12	0.105	2.67	4.000	101.60	1.925	48.89	1.164	29.57	25.07	111.52	12.08	2.12
C1225-105-4500-X	1.225	31.12	0.105	2.67	4.500	114.30	2.149	54.59	1.283	32.59	25.07	111.52	10.66	1.87
C1225-105-5000-X	1.225	31.12	0.105	2.67	5.000	127.00	2.383	60.54	1.402	35.61	25.07	111.52	9.58	1.68
C1225-112-0875-X	1.225	31.12	0.112	2.84	0.880	22.35	0.542	13.77	0.455	11.56	29.57	131.53	87.55	15.34
C1225-112-1000-X	1.225	31.12	0.112	2.84	1.000	25.40	0.597	15.18	0.488	12.40	29.57	131.53	73.47	12.87
C1225-112-1250-X	1.225	31.12	0.112	2.84	1.250	31.75	0.718	18.23	0.556	14.12	29.57	131.53	55.56	9.74
C1225-112-1500-X	1.225	31.12	0.112	2.84	1.500	38.10	0.838	21.28	0.623	15.82	29.57	131.53	44.65	7.83
C1225-112-2000-X	1.225	31.12	0.112	2.84	2.000	50.80	1.078	27.38	0.757	19.23	29.57	131.53	32.07	5.62
C1225-112-2500-X	1.225	31.12	0.112	2.84	2.500	63.50	1.321	33.54	0.891	22.63	29.57	131.53	25.07	4.40
C1225-112-3000-X	1.225	31.12	0.112	2.84	3.000	76.20	1.557	39.54	1.026	26.06	29.57	131.53	20.49	3.59
C1225-112-3500-X	1.225	31.12	0.112	2.84	3.500	88.90	1.801	45.75	1.160	29.46	29.57	131.53	17.41	3.05
C1225-112-4000-X	1.225	31.12	0.112	2.84	4.000	101.60	2.039	51.78	1.294	32.87	29.57	131.53	15.08	2.64
C1225-125-0875-X	1.225	31.12	0.125	3.18	0.880	22.35	0.591	15.02	0.517	13.13	38.78	172.50	134.36	23.54
C1225-125-1000-X	1.225	31.12	0.125	3.18	1.000	25.40	0.654	16.60	0.558	14.17	38.78	172.50	111.96	19.61
C1225-125-1250-X	1.225	31.12	0.125	3.18	1.250	31.75	0.788	20.02	0.639	16.23	38.78	172.50	83.97	14.71
C1225-125-1500-X	1.225	31.12	0.125	3.18	1.500	38.10	0.922	23.43	0.721	18.31	38.78	172.50	67.14	11.75
C1225-125-1750-X	1.225	31.12	0.125	3.18	1.750	44.45	1.057	26.85	0.803	20.40	38.78	172.50	55.98	9.81
C1225-125-2000-X	1.225	31.12	0.125	3.18	2.000	50.80	1.192	30.27	0.885	22.48	38.78	172.50	47.98	8.41
C1225-125-2250-X	1.225	31.12	0.125	3.18	2.250	57.15	1.326	33.69	0.966	24.54	38.78	172.50	41.98	7.36
C1225-125-2500-X	1.225	31.12	0.125	3.18	2.500	63.50	1.461	37.11	1.048	26.62	38.78	172.50	37.32	6.53
C1225-125-2750-X	1.225	31.12	0.125	3.18	2.750	69.85	1.595	40.51	1.130	28.70	38.78	172.50	33.57	5.88
C1225-125-3000-X	1.225	31.12	0.125	3.18	3.000	76.20	1.732	43.98	1.212	30.78	38.78	172.50	30.57	5.36
C1225-125-3500-X	1.225	31.12	0.125	3.18	3.500	88.90	1.998	50.76	1.375	34.93	38.78	172.50	25.82	4.52
C1225-125-4000-X	1.225	31.12	0.125	3.18	4.000	101.60	2.269	57.64	1.539	39.09	38.78	172.50	22.41	3.92
C1225-125-4500-X	1.225	31.12	0.125	3.18	4.500	114.30	2.536	64.41	1.702	43.23	38.78	172.50	19.74	3.45
C1225-125-5000-X	1.225	31.12	0.125	3.18	5.000	127.00	2.804	71.22	1.865	47.37	38.78	172.50	17.66	3.10
C1225-135-0880-X	1.225	31.12	0.135	3.43	0.880	22.35	0.614	15.59	0.565	14.35	48.63	216.32	182.59	31.98
C1225-135-1000-X	1.225	31.12	0.135	3.43	1.000	25.40	0.681	17.30	0.609	15.47	48.63	216.32	152.52	26.71
C1225-135-1250-X	1.225	31.12	0.135	3.43	1.250	31.75	0.822	20.88	0.702	17.83	48.63	216.32	113.62	19.89
C1225-135-1500-X	1.225	31.12	0.135	3.43	1.500	38.10	0.963	24.46	0.795	20.19	48.63	216.32	90.55	15.87
C1225-135-2000-X	1.225	31.12	0.135	3.43	2.000	50.80	1.245	31.62	0.982	24.94	48.63	216.32	64.39	11.28
C1225-135-2500-X	1.225	31.12	0.135	3.43	2.500	63.50	1.527	38.79	1.168	29.67	48.63	216.32	49.98	8.76
C1225-135-3000-X	1.225	31.12	0.135	3.43	3.000	76.20	1.809	45.94	1.354	34.39	48.63	216.32	40.82	7.15
C1225-135-3500-X	1.225	31.12	0.135	3.43	3.500	88.90	2.090	53.09	1.540	39.12	48.63	216.32	34.49	6.04
C1225-148-0880-X	1.225	31.12	0.148	3.76	0.880	22.35	0.645	16.38	0.621	15.77	63.67	283.22	270.73	47.41
C1225-148-1000-X	1.225	31.12	0.148	3.76	1.000	25.40	0.716	18.20	0.673	17.09	63.67	283.22	224.58	39.33
C1225-148-1250-X	1.225	31.12	0.148	3.76	1.250	31.75	0.866	21.99	0.781	19.84	63.67	283.22	165.68	29.02
C1225-148-1500-X	1.225	31.12	0.148	3.76	1.500	38.10	1.015	25.78	0.888	22.56	63.67	283.22	131.28	22.99
C1225-148-2000-X	1.225	31.12	0.148	3.76	2.000	50.80	1.314	33.37	1.104	28.04	63.67	283.22	92.80	16.25
C1225-148-2500-X	1.225	31.12	0.148	3.76	2.500	63.50	1.612	40.95	1.319	33.50	63.67	283.22	71.72	12.56
C1225-148-3000-X	1.225	31.12	0.148	3.76	3.000	76.20	1.911	48.55	1.534	38.96	63.67	283.22	58.48	10.24
C1225-148-3500-X	1.225	31.12	0.148	3.76	3.500	88.90	2.209	56.11	1.749	44.42	63.67	283.22	49.31	8.63
C1225-148-4000-X	1.225	31.12	0.148	3.76	4.000	101.60	2.507	63.68	1.965	49.91	63.67	283.22	42.65	7.48
C1225-148-4500-X	1.225	31.12	0.148	3.76	4.500	114.30	2.805	71.25	2.180	55.37	63.67	283.22	37.57	6.58
C1225-148-5000-X	1.225	31.12	0.148	3.76	5.000	127.00	3.103	78.83	2.395	60.83	63.67	283.22	33.57	5.88
C1225-162-1000-X	1.225	31.12	0.162	4.11	1.000	25.40	0.766	19.47	0.727	18.47	80.67	358.84	345.36	60.49
C1225-162-1500-X	1.225	31.12	0.162	4.11	1.500	38.10	1.094	27.78	0.965	24.51	80.67	358.84	198.50	34.76
C1225-162-2000-X	1.225	31.12	0.162	4.11	2.000	50.80	1.421	36.09	1.204	30.58	80.67	358.84	139.28	24.40
C1225-162-2500-X	1.225	31.12	0.162	4.11	2.500	63.50	1.748	44.40	1.442	36.63	80.67	358.84	107.29	18.79
C1225-162-3000-X	1.225	31.12	0.162	4.11	3.000	76.20	2.075	52.71	1.680	42.67	80.67	358.84	87.22	15.27
C1225-162-3500-X	1.225	31.12	0.162	4.11	3.500	88.90	2.402	61.01	1.918	48.72	80.67	358.84	73.47	12.87
C1225-162-4000-X	1.225	31.12	0.162	4.11	4.000	101.60	2.729	69.32	2.157	54.79	80.67	358.84	63.47	11.12
C1225-162-4500-X	1.225	31.12	0.162	4.11	4.500	114.30	3.057	77.64	2.395	60.83	80.67	358.84	55.89	9.79
C1225-162-5000-X	1.225	31.12	0.162	4.11	5.000	127.00	3.383	85.94	2.633	66.88	80.67	358.84	49.90	8.74
C1225-177-1500-X	1.225	31.12	0.177	4.50	1.500	38.10	1.165	29.59	1.057	26.85	98.57	438.46	294.05	51.50

Part Numbers with an "*" are squared and not ground.

316 STAINLESS STEEL

Catalog #	Outside Diameter (OD)		Wire Diameter (d)		Free Length (L) Approx		Load Length (L_1)		Solid Height (Sh) Approx		Load (P) at L_1		Spring Rate (R)	
	in	mm	in	mm	in	mm	in	mm	in	mm	lb	N	lb/in	N/mm
C1225-177-2000-X	1.225	31.12	0.177	4.50	2.000	50.80	1.519	38.57	1.325	33.66	98.57	438.46	204.75	35.87
C1225-177-2500-X	1.225	31.12	0.177	4.50	2.500	63.50	1.872	47.56	1.594	40.49	98.57	438.46	157.02	27.49
C1225-177-3000-X	1.225	31.12	0.177	4.50	3.000	76.20	2.226	56.54	1.862	47.29	98.57	438.46	127.37	22.31
C1225-177-3500-X	1.225	31.12	0.177	4.50	3.500	88.90	2.580	65.53	2.130	54.10	98.57	438.46	107.12	18.76
C1225-177-4000-X	1.225	31.12	0.177	4.50	4.000	101.60	2.933	74.50	2.398	60.91	98.57	438.46	92.38	16.18
C1225-177-4500-X	1.225	31.12	0.177	4.50	4.500	114.30	3.288	83.51	2.666	67.72	98.57	438.46	81.30	14.24
C1225-177-5000-X	1.225	31.12	0.177	4.50	5.000	127.00	3.641	92.49	2.934	74.52	98.57	438.46	72.55	12.71
C1225-192-1500-X	1.225	31.12	0.192	4.88	1.500	38.10	1.227	31.16	1.139	28.93	117.39	522.18	429.91	75.29
C1225-192-2000-X	1.225	31.12	0.192	4.88	2.000	50.80	1.605	40.76	1.435	36.45	117.39	522.18	296.88	52.00
C1225-192-2500-X	1.225	31.12	0.192	4.88	2.500	63.50	1.982	50.35	1.730	43.94	117.39	522.18	226.74	39.70
C1225-192-3000-X	1.225	31.12	0.192	4.88	3.000	76.20	2.360	59.94	2.025	51.44	117.39	522.18	183.43	32.12
C1225-192-3500-X	1.225	31.12	0.192	4.88	3.500	88.90	2.737	69.53	2.321	58.95	117.39	522.18	153.94	26.95
C1225-192-4000-X	1.225	31.12	0.192	4.88	4.000	101.60	3.115	79.13	2.616	66.45	117.39	522.18	132.70	23.24
C1225-192-4500-X	1.225	31.12	0.192	4.88	4.500	114.30	3.493	88.71	2.912	73.96	117.39	522.18	116.54	20.40
C1225-192-5000-X	1.225	31.12	0.192	4.88	5.000	127.00	3.871	98.32	3.207	81.46	117.39	522.18	103.96	18.21
C1225-207-2000-X	1.225	31.12	0.207	5.26	2.000	50.80	1.653	41.99	1.543	39.19	145.77	648.42	420.50	73.64
C1225-207-2500-X	1.225	31.12	0.207	5.26	2.500	63.50	2.044	51.92	1.867	47.42	145.77	648.42	319.71	55.99
C1225-207-3000-X	1.225	31.12	0.207	5.26	3.000	76.20	2.435	61.84	2.190	55.63	145.77	648.42	257.90	45.17
C1225-207-3500-X	1.225	31.12	0.207	5.26	3.500	88.90	2.825	71.76	2.514	63.86	145.77	648.42	216.08	37.84
C1225-207-4000-X	1.225	31.12	0.207	5.26	4.000	101.60	3.216	81.69	2.837	72.06	145.77	648.42	185.93	32.56
C1225-207-4500-X	1.225	31.12	0.207	5.26	4.500	114.30	3.607	91.61	3.161	80.29	145.77	648.42	163.18	28.58
C1225-207-5000-X	1.225	31.12	0.207	5.26	5.000	127.00	3.998	101.54	3.484	88.49	145.77	648.42	145.44	25.46
D23140X	1.358	34.50	0.098	2.50	2.815	71.50	1.836	46.63	0.541	13.75	320.85	72.13	16.56	2.90
D23150X	1.358	34.50	0.098	2.50	4.331	110.00	2.796	71.01	0.738	18.75	320.85	72.13	10.56	1.85
D23160X	1.358	34.50	0.098	2.50	6.693	170.00	4.307	109.39	1.033	26.25	320.85	72.13	6.80	1.19
D23170X	1.358	34.50	0.098	2.50	9.646	245.00	6.140	155.95	1.427	36.25	320.85	72.13	4.63	0.81
D23180X	1.358	34.50	0.098	2.50	14.173	360.00	9.010	228.85	2.018	51.25	320.85	72.13	3.14	0.55
D23430X	1.386	35.20	0.126	3.20	2.303	58.50	1.604	40.73	0.693	17.60	613.54	137.93	44.31	7.76
D23440X	1.386	35.20	0.126	3.20	3.484	88.50	2.383	60.52	0.945	24.00	613.54	137.93	28.15	4.93
D23450X	1.386	35.20	0.126	3.20	5.315	135.00	3.607	91.63	1.323	33.60	613.54	137.93	18.16	3.18
D23460X	1.386	35.20	0.126	3.20	7.480	190.00	4.978	126.44	1.827	46.40	613.54	137.93	12.39	2.17
D23470X	1.386	35.20	0.126	3.20	11.024	280.00	7.330	186.17	2.583	65.60	613.54	137.93	8.39	1.47
D23630X	1.417	36.00	0.157	4.00	2.106	53.50	1.604	40.73	0.866	22.00	1076.38	241.98	108.21	18.95
D23640X	1.417	36.00	0.157	4.00	3.130	79.50	2.337	59.35	1.181	30.00	1076.38	241.98	68.58	12.01
D23650X	1.417	36.00	0.157	4.00	4.724	120.00	3.502	88.94	1.654	42.00	1076.38	241.98	44.48	7.79
D23660X	1.417	36.00	0.157	4.00	6.693	170.00	4.892	124.26	2.283	58.00	1076.38	241.98	30.21	5.29
D23670X	1.417	36.00	0.157	4.00	9.843	250.00	7.181	182.41	3.228	82.00	1076.38	241.98	20.44	3.58
D23830X	1.457	37.00	0.197	5.00	2.008	51.00	1.657	42.08	1.083	27.50	1831.55	411.75	263.58	46.16
D23840X	1.457	37.00	0.197	5.00	2.953	75.00	2.401	60.99	1.476	37.50	1831.55	411.75	167.88	29.40
D23850X	1.457	37.00	0.197	5.00	4.331	110.00	3.479	88.36	2.067	52.50	1831.55	411.75	108.66	19.03
D23860X	1.457	37.00	0.197	5.00	6.299	160.00	5.043	128.08	2.854	72.50	1831.55	411.75	73.66	12.90
D23870X	1.457	37.00	0.197	5.00	9.055	230.00	7.200	182.89	4.035	102.50	1831.55	411.75	49.91	8.74
C1460-112-1500-X	1.460	37.08	0.112	2.84	1.500	38.10	0.773	19.64	0.531	13.49	25.00	111.21	34.40	6.02
C1460-112-2000-X	1.460	37.08	0.112	2.84	2.000	50.80	0.986	25.05	0.629	15.98	25.00	111.21	24.66	4.33
C1460-112-2500-X	1.460	37.08	0.112	2.84	2.500	63.50	1.201	30.50	0.727	18.47	25.00	111.21	19.24	3.36
C1460-112-3000-X	1.460	37.08	0.112	2.84	3.000	76.20	1.420	36.08	0.825	20.96	25.00	111.21	15.83	2.77
C1460-112-3500-X	1.460	37.08	0.112	2.84	3.500	88.90	1.636	41.55	0.924	23.47	25.00	111.21	13.41	2.35
C1460-112-4000-X	1.460	37.08	0.112	2.84	4.000	101.60	1.841	46.76	1.022	25.96	25.00	111.21	11.58	2.03
C1460-125-1500-X	1.460	37.08	0.125	3.18	1.500	38.10	0.851	21.61	0.616	15.65	32.83	146.04	50.56	8.86
C1460-125-2000-X	1.460	37.08	0.125	3.18	2.000	50.80	1.092	27.74	0.738	18.75	32.83	146.04	36.15	6.34
C1460-125-2500-X	1.460	37.08	0.125	3.18	2.500	63.50	1.331	33.80	0.859	21.82	32.83	146.04	28.07	4.92
C1460-125-3000-X	1.460	37.08	0.125	3.18	3.000	76.20	1.572	39.94	0.981	24.92	32.83	146.04	22.99	4.03
C1460-125-3500-X	1.460	37.08	0.125	3.18	3.500	88.90	1.809	45.94	1.102	27.99	32.83	146.04	19.41	3.40
C1460-125-4000-X	1.460	37.08	0.125	3.18	4.000	101.60	2.049	52.05	1.224	31.09	32.83	146.04	16.83	2.94
C1460-135-1500-X	1.460	37.08	0.135	3.43	1.500	38.10	0.884	22.45	0.682	17.32	41.20	183.27	66.89	11.72
C1460-135-2000-X	1.460	37.08	0.135	3.43	2.000	50.80	1.134	28.80	0.823	20.90	41.20	183.27	47.56	8.34
C1460-135-2500-X	1.460	37.08	0.135	3.43	2.500	63.50	1.383	35.14	0.963	24.46	41.20	183.27	36.90	6.46
C1460-135-3000-X	1.460	37.08	0.135	3.43	3.000	76.20	1.634	41.49	1.103	28.02	41.20	183.27	30.15	5.29
C1460-135-3500-X	1.460	37.08	0.135	3.43	3.500	88.90	1.884	47.84	1.243	31.57	41.20	183.27	25.49	4.47
C1460-135-4000-X	1.460	37.08	0.135	3.43	4.000	101.60	2.134	54.19	1.393	35.38	41.20	183.27	22.07	3.87
C1460-148-1500-X	1.460	37.08	0.148	3.76	1.500	38.10	0.930	23.61	0.768	19.51	54.03	240.34	94.71	16.58
C1460-148-2000-X	1.460	37.08	0.148	3.76	2.000	50.80	1.192	30.28	0.933	23.70	54.03	240.34	66.89	11.72
C1460-148-2500-X	1.460	37.08	0.148	3.76	2.500	63.50	1.456	36.97	1.098	27.89	54.03	240.34	51.73	9.05
C1460-148-3000-X	1.460	37.08	0.148	3.76	3.000	76.20	1.718	43.64	1.263	32.08	54.03	240.34	42.15	7.39

FOR INFORMATION ON ALTERNATIVE FINISHES, SEE PAGE 311

Part Numbers with an "*" are squared and not ground.

316 STAINLESS STEEL

Catalog #	Outside Diameter (OD)		Wire Diameter (d)		Free Length (L) Approx		Load Length (L_1)		Solid Height (Sh) Approx		Load (P) at L_1		Spring Rate (R)	
	in	mm	in	mm	in	mm	in	mm	in	mm	lb	N	lb/in	N/mm
C1460-148-3500-X	1.460	37.08	0.148	3.76	3.500	88.90	1.981	50.32	1.428	36.27	54.03	240.34	35.57	6.23
C1460-148-4000-X	1.460	37.08	0.148	3.76	4.000	101.60	2.247	57.08	1.593	40.46	54.03	240.34	30.82	5.39
C1460-162-1500-X	1.460	37.08	0.162	4.11	1.500	38.10	0.993	25.23	0.857	21.77	68.57	305.01	135.28	23.69
C1460-162-2000-X	1.460	37.08	0.162	4.11	2.000	50.80	1.278	32.46	1.049	26.64	68.57	305.01	94.96	16.64
C1460-162-2500-X	1.460	37.08	0.162	4.11	2.500	63.50	1.563	39.69	1.241	31.52	68.57	305.01	73.14	12.80
C1460-162-3000-X	1.460	37.08	0.162	4.11	3.000	76.20	1.847	46.92	1.433	36.40	68.57	305.01	59.48	10.42
C1460-162-3500-X	1.460	37.08	0.162	4.11	3.500	88.90	2.130	54.11	1.625	41.28	68.57	305.01	50.06	8.77
C1460-162-4000-X	1.460	37.08	0.162	4.11	4.000	101.60	2.417	61.39	1.817	46.15	68.57	305.01	43.32	7.58
C1460-162-4500-X	1.460	37.08	0.162	4.11	4.500	114.30	2.699	68.55	2.009	51.03	68.57	305.01	38.07	6.67
C1460-162-5000-X	1.460	37.08	0.162	4.11	5.000	127.00	2.983	75.76	2.201	55.91	68.57	305.01	33.99	5.95
C1687-135-1500-X	1.687	42.85	0.135	3.43	1.500	38.10	0.831	21.11	0.605	15.37	35.89	159.65	53.65	9.40
C1687-135-2000-X	1.687	42.85	0.135	3.43	2.000	50.80	1.059	26.91	0.714	18.14	35.89	159.65	38.15	6.69
C1687-135-2500-X	1.687	42.85	0.135	3.43	2.500	63.50	1.286	32.67	0.823	20.90	35.89	159.65	29.57	5.18
C1687-135-3000-X	1.687	42.85	0.135	3.43	3.000	76.20	1.514	38.46	0.932	23.67	35.89	159.65	24.16	4.24
C1687-135-3500-X	1.687	42.85	0.135	3.43	3.500	88.90	1.741	44.23	1.041	26.44	35.89	159.65	20.41	3.57
C1687-135-4000-X	1.687	42.85	0.135	3.43	4.000	101.60	1.968	49.98	1.150	29.21	35.89	159.65	17.66	3.10
C1687-135-4500-X	1.687	42.85	0.135	3.43	4.500	114.30	2.196	55.78	1.259	31.98	35.89	159.65	15.58	2.73
C1687-135-5000-X	1.687	42.85	0.135	3.43	5.000	127.00	2.420	61.47	1.368	34.75	35.89	159.65	13.91	2.43
C1687-148-1500-X	1.687	42.85	0.148	3.76	1.500	38.10	0.870	22.09	0.682	17.32	47.10	209.51	74.72	13.08
C1687-148-2000-X	1.687	42.85	0.148	3.76	2.000	50.80	1.108	28.15	0.812	20.62	47.10	209.51	52.81	9.25
C1687-148-2500-X	1.687	42.85	0.148	3.76	2.500	63.50	1.346	34.19	0.942	23.93	47.10	209.51	40.82	7.15
C1687-148-3000-X	1.687	42.85	0.148	3.76	3.000	76.20	1.583	40.21	1.071	27.20	47.10	209.51	33.24	5.81
C1687-148-3500-X	1.687	42.85	0.148	3.76	3.500	88.90	1.822	46.28	1.201	30.51	47.10	209.51	28.07	4.92
C1687-148-4000-X	1.687	42.85	0.148	3.76	4.000	101.60	2.057	52.25	1.331	33.81	47.10	209.51	24.24	4.24
C1687-148-4500-X	1.687	42.85	0.148	3.76	4.500	114.30	2.300	58.42	1.461	37.11	47.10	209.51	21.41	3.75
C1687-148-5000-X	1.687	42.85	0.148	3.76	5.000	127.00	2.531	64.28	1.590	40.39	47.10	209.51	19.08	3.34
C1687-162-1500-X	1.687	42.85	0.162	4.11	1.500	38.10	0.929	23.60	0.765	19.43	59.84	266.18	104.79	18.35
C1687-162-2000-X	1.687	42.85	0.162	4.11	2.000	50.80	1.186	30.11	0.918	23.32	59.84	266.18	73.47	12.87
C1687-162-2500-X	1.687	42.85	0.162	4.11	2.500	63.50	1.444	36.67	1.070	27.18	59.84	266.18	56.64	9.91
C1687-162-3000-X	1.687	42.85	0.162	4.11	3.000	76.20	1.701	43.21	1.223	31.06	59.84	266.18	46.06	8.07
C1687-162-3500-X	1.687	42.85	0.162	4.11	3.500	88.90	1.959	49.75	1.376	34.95	59.84	266.18	38.82	6.79
C1687-162-4000-X	1.687	42.85	0.162	4.11	4.000	101.60	2.213	56.21	1.529	38.84	59.84	266.18	33.49	5.87
C1687-162-4500-X	1.687	42.85	0.162	4.11	4.500	114.30	2.471	62.76	1.682	42.72	59.84	266.18	29.49	5.17
C1687-162-5000-X	1.687	42.85	0.162	4.11	5.000	127.00	2.727	69.26	1.835	46.61	59.84	266.18	26.32	4.61
C1687-177-1500-X	1.687	42.85	0.177	4.50	1.500	38.10	1.004	25.51	0.851	21.62	73.35	326.28	148.02	25.92
C1687-177-2000-X	1.687	42.85	0.177	4.50	2.000	50.80	1.288	32.72	1.029	26.14	73.35	326.28	103.04	18.04
C1687-177-2500-X	1.687	42.85	0.177	4.50	2.500	63.50	1.572	39.93	1.207	30.66	73.35	326.28	79.05	13.85
C1687-177-3000-X	1.687	42.85	0.177	4.50	3.000	76.20	1.855	47.12	1.385	35.18	73.35	326.28	64.06	11.23
C1687-177-3500-X	1.687	42.85	0.177	4.50	3.500	88.90	2.139	54.33	1.563	39.70	73.35	326.28	53.90	9.44
C1687-177-4000-X	1.687	42.85	0.177	4.50	4.000	101.60	2.422	61.52	1.741	44.22	73.35	326.28	46.48	8.14
C1687-177-4500-X	1.687	42.85	0.177	4.50	4.500	114.30	2.707	68.75	1.920	48.77	73.35	326.28	40.90	7.16
C1687-177-5000-X	1.687	42.85	0.177	4.50	5.000	127.00	2.990	75.94	2.098	53.29	73.35	326.28	36.49	6.39
C1687-192-1500-X	1.687	42.85	0.192	4.88	1.500	38.10	1.075	27.30	0.934	23.72	87.66	389.93	206.08	36.09
C1687-192-2000-X	1.687	42.85	0.192	4.88	2.000	50.80	1.384	35.16	1.137	28.88	87.66	389.93	142.36	24.94
C1687-192-2500-X	1.687	42.85	0.192	4.88	2.500	63.50	1.694	43.02	1.340	34.04	87.66	389.93	108.71	19.04
C1687-192-3000-X	1.687	42.85	0.192	4.88	3.000	76.20	2.003	50.89	1.543	39.19	87.66	389.93	87.96	15.41
C1687-192-3500-X	1.687	42.85	0.192	4.88	3.500	88.90	2.312	58.73	1.747	44.37	87.66	389.93	73.80	12.92
C1687-192-4000-X	1.687	42.85	0.192	4.88	4.000	101.60	2.623	66.61	1.950	49.53	87.66	389.93	63.64	11.14
C1687-192-4500-X	1.687	42.85	0.192	4.88	4.500	114.30	2.932	74.46	2.153	54.69	87.66	389.93	55.89	9.79
C1687-192-5000-X	1.687	42.85	0.192	4.88	5.000	127.00	3.240	82.30	2.356	59.84	87.66	389.93	49.81	8.72
D23480X	1.701	43.20	0.126	3.20	3.228	82.00	2.104	53.45	0.693	17.60	504.25	113.36	22.67	3.97
D23490X	1.701	43.20	0.126	3.20	4.921	125.00	3.150	80.02	0.945	24.00	504.25	113.36	14.39	2.52
D23500X	1.701	43.20	0.126	3.20	7.480	190.00	4.742	120.45	1.323	33.60	504.25	113.36	9.31	1.63
D23510X	1.701	43.20	0.126	3.20	10.827	275.00	6.806	172.87	1.827	46.40	504.25	113.36	6.34	1.11
D23520X	1.701	43.20	0.126	3.20	15.945	405.00	9.994	253.85	2.583	65.60	504.25	113.36	4.28	0.75
D23680X	1.732	44.00	0.157	4.00	2.795	71.00	1.984	50.40	0.866	22.00	890.58	200.21	55.50	9.72
D23690X	1.732	44.00	0.157	4.00	4.134	105.00	2.854	72.50	1.181	30.00	890.58	200.21	35.17	6.16
D23700X	1.732	44.00	0.157	4.00	6.299	160.00	4.324	109.82	1.654	42.00	890.58	200.21	22.78	3.99
D23710X	1.732	44.00	0.157	4.00	9.252	235.00	6.354	161.39	2.283	58.00	890.58	200.21	15.53	2.72
D23720X	1.732	44.00	0.157	4.00	13.386	340.00	9.079	230.60	3.228	82.00	890.58	200.21	10.45	1.83
D23880X	1.772	45.00	0.197	5.00	2.520	64.00	1.947	49.45	1.083	27.50	1528.32	343.58	134.82	23.61
D23890X	1.772	45.00	0.197	5.00	3.760	95.50	2.860	72.64	1.476	37.50	1528.32	343.58	85.82	15.03
D23900X	1.772	45.00	0.197	5.00	5.512	140.00	4.120	104.65	2.067	52.50	1528.32	343.58	55.50	9.72
D23910X	1.772	45.00	0.197	5.00	8.071	205.00	6.024	153.02	2.854	72.50	1528.32	343.58	37.74	6.61

Part Numbers with an "*" are squared and not ground.

316 STAINLESS STEEL

Catalog #	Outside Diameter (OD)		Wire Diameter (d)		Free Length (L) Approx		Load Length (L_1)		Solid Height (Sh) Approx		Load (P) at L_1		Spring Rate (R)	
	in	mm	in	mm	in	mm	in	mm	in	mm	lb	N	lb/in	N/mm
D23920X	1.772	45.00	0.197	5.00	11.811	300.00	8.778	222.96	4.035	102.50	1528.32	343.58	25.47	4.46
C1937-148-2000-X	1.937	49.20	0.148	3.76	2.000	50.80	1.040	26.42	0.716	18.19	41.26	183.53	42.98	7.53
C1937-148-2500-X	1.937	49.20	0.148	3.76	2.500	63.50	1.259	31.97	0.817	20.75	41.26	183.53	33.24	5.81
C1937-148-3000-X	1.937	49.20	0.148	3.76	3.000	76.20	1.476	37.49	0.919	23.34	41.26	183.53	27.07	4.75
C1937-148-3500-X	1.937	49.20	0.148	3.76	3.500	88.90	1.692	42.99	1.020	25.91	41.26	183.53	22.82	3.99
C1937-148-4000-X	1.937	49.20	0.148	3.76	4.000	101.60	1.910	48.52	1.122	28.50	41.26	183.53	19.74	3.45
C1937-148-4500-X	1.937	49.20	0.148	3.76	4.500	114.30	2.130	54.11	1.223	31.06	41.26	183.53	17.41	3.05
C1937-148-5000-X	1.937	49.20	0.148	3.76	5.000	127.00	2.351	59.72	1.324	33.63	41.26	183.53	15.58	2.73
C1937-148-5500-X	1.937	49.20	0.148	3.76	5.500	139.70	2.569	65.26	1.426	36.22	41.26	183.53	14.08	2.47
C1937-162-2000-X	1.937	49.20	0.162	4.11	2.000	50.80	1.111	28.21	0.810	20.57	52.46	233.35	58.98	10.33
C1937-162-2500-X	1.937	49.20	0.162	4.11	2.500	63.50	1.345	34.15	0.931	23.65	52.46	233.35	45.40	7.95
C1937-162-3000-X	1.937	49.20	0.162	4.11	3.000	76.20	1.579	40.09	1.052	26.72	52.46	233.35	36.90	6.46
C1937-162-3500-X	1.937	49.20	0.162	4.11	3.500	88.90	1.816	46.13	1.173	29.79	52.46	233.35	31.15	5.46
C1937-162-4000-X	1.937	49.20	0.162	4.11	4.000	101.60	2.050	52.08	1.293	32.84	52.46	233.35	26.91	4.71
C1937-162-4500-X	1.937	49.20	0.162	4.11	4.500	114.30	2.283	57.98	1.414	35.92	52.46	233.35	23.66	4.15
C1937-162-5000-X	1.937	49.20	0.162	4.11	5.000	127.00	2.521	64.03	1.535	38.99	52.46	233.35	21.16	3.71
C1937-162-5500-X	1.937	49.20	0.162	4.11	5.500	139.70	2.750	69.85	1.656	42.06	52.46	233.35	19.08	3.34
C1937-177-2500-X	1.937	49.20	0.177	4.50	2.500	63.50	1.469	37.30	1.054	26.77	64.36	286.29	62.39	10.93
C1937-177-3000-X	1.937	49.20	0.177	4.50	3.000	76.20	1.729	43.92	1.196	30.38	64.36	286.29	50.65	8.88
C1937-177-3500-X	1.937	49.20	0.177	4.50	3.500	88.90	1.988	50.50	1.339	34.01	64.36	286.29	42.57	7.46
C1937-177-4000-X	1.937	49.20	0.177	4.50	4.000	101.60	2.248	57.10	1.481	37.62	64.36	286.29	36.74	6.43
C1937-177-4500-X	1.937	49.20	0.177	4.50	4.500	114.30	2.509	63.72	1.624	41.25	64.36	286.29	32.32	5.66
C1937-177-5000-X	1.937	49.20	0.177	4.50	5.000	127.00	2.767	70.28	1.766	44.86	64.36	286.29	28.82	5.04
C1937-177-5500-X	1.937	49.20	0.177	4.50	5.500	139.70	3.024	76.80	1.908	48.46	64.36	286.29	25.99	4.55
C1937-177-6000-X	1.937	49.20	0.177	4.50	6.000	152.40	3.289	83.55	2.051	52.10	64.36	286.29	23.74	4.15
C1937-192-2500-X	1.937	49.20	0.192	4.88	2.500	63.50	1.589	40.35	1.176	29.87	76.99	342.47	84.47	14.80
C1937-192-3000-X	1.937	49.20	0.192	4.88	3.000	76.20	1.873	47.57	1.341	34.06	76.99	342.47	68.31	11.96
C1937-192-3500-X	1.937	49.20	0.192	4.88	3.500	88.90	2.157	54.78	1.505	38.23	76.99	342.47	57.31	10.03
C1937-192-4000-X	1.937	49.20	0.192	4.88	4.000	101.60	2.441	62.01	1.670	42.42	76.99	342.47	49.40	8.65
C1937-192-4500-X	1.937	49.20	0.192	4.88	4.500	114.30	2.726	69.24	1.834	46.58	76.99	342.47	43.40	7.60
C1937-192-5000-X	1.937	49.20	0.192	4.88	5.000	127.00	3.012	76.51	1.999	50.77	76.99	342.47	38.73	6.78
C1937-192-5500-X	1.937	49.20	0.192	4.88	5.500	139.70	3.294	83.67	2.164	54.97	76.99	342.47	34.90	6.11
C1937-192-6000-X	1.937	49.20	0.192	4.88	6.000	152.40	3.581	90.95	2.328	59.13	76.99	342.47	31.82	5.57
C1937-207-2500-X	1.937	49.20	0.207	5.26	2.500	63.50	1.648	41.87	1.297	32.94	96.06	427.30	112.79	19.75
C1937-207-3000-X	1.937	49.20	0.207	5.26	3.000	76.20	1.944	49.38	1.483	37.67	96.06	427.30	90.96	15.94
C1937-207-3500-X	1.937	49.20	0.207	5.26	3.500	88.90	2.240	56.89	1.670	42.42	96.06	427.30	76.22	13.34
C1937-207-4000-X	1.937	49.20	0.207	5.26	4.000	101.60	2.537	64.43	1.857	47.17	96.06	427.30	65.64	11.49
C1937-207-4500-X	1.937	49.20	0.207	5.26	4.500	114.30	2.831	71.91	2.044	51.92	96.06	427.30	57.56	10.09
C1937-207-5000-X	1.937	49.20	0.207	5.26	5.000	127.00	3.128	79.45	2.230	56.64	96.06	427.30	51.31	8.98
C1937-207-5500-X	1.937	49.20	0.207	5.26	5.500	139.70	3.422	86.92	2.417	61.39	96.06	427.30	46.23	8.09
C1937-207-6000-X	1.937	49.20	0.207	5.26	6.000	152.40	3.721	94.51	2.604	66.14	96.06	427.30	42.15	7.39
D23730X	2.126	54.00	0.157	4.00	3.898	99.00	2.592	65.83	0.866	22.00	731.91	164.54	28.32	4.96
D23740X	2.126	54.00	0.157	4.00	5.906	150.00	3.856	97.93	1.181	30.00	731.91	164.54	18.04	3.16
D23750X	2.126	54.00	0.157	4.00	9.055	230.00	5.880	149.34	1.654	42.00	731.91	164.54	11.65	2.04
D23760X	2.126	54.00	0.157	4.00	13.189	335.00	8.529	216.63	2.283	58.00	731.91	164.54	7.94	1.39
D23770X	2.126	54.00	0.157	4.00	19.291	490.00	12.400	314.96	3.228	82.00	731.91	164.54	5.37	0.94
D23930X	2.165	55.00	0.197	5.00	3.346	85.00	2.421	61.49	1.083	27.50	1264.50	284.27	69.04	12.09
D23940X	2.165	55.00	0.197	5.00	5.118	130.00	3.667	93.13	1.476	37.50	1264.50	284.27	44.03	7.71
D23950X	2.165	55.00	0.197	5.00	7.677	195.00	5.430	137.92	2.067	52.50	1264.50	284.27	28.44	4.98
D23960X	2.165	55.00	0.197	5.00	11.024	280.00	7.722	196.14	2.854	72.50	1264.50	284.27	19.36	3.39
D23970X	2.165	55.00	0.197	5.00	16.142	410.00	11.254	285.86	4.035	102.50	1264.50	284.27	13.08	2.29
D23980X	2.677	68.00	0.197	5.00	4.724	120.00	3.217	81.72	1.083	27.50	1031.85	231.97	34.60	6.06
D23990X	2.677	68.00	0.197	5.00	7.087	180.00	4.720	119.90	1.476	37.50	1031.85	231.97	22.04	3.86
D24000X	2.677	68.00	0.197	5.00	10.827	275.00	7.159	181.84	2.067	52.50	1031.85	231.97	14.22	2.49
D24010X	2.677	68.00	0.197	5.00	15.551	395.00	10.147	257.74	2.854	72.50	1031.85	231.97	9.65	1.69
D24020X	2.677	68.00	0.197	5.00	23.031	585.00	15.020	381.52	4.035	102.50	1031.85	231.97	6.51	1.14

FOR INFORMATION ON ALTERNATIVE FINISHES, SEE PAGE 311

Part Numbers with an "*" are squared and not ground.

HEAVY DUTY COMPRESSION SPRINGS

Stock sizes in chrome alloy steel
The use of high-quality chrome alloy steel combines maximum load with long life.

Designed to work in pocket or over shaft, our SPEC heavy-duty springs are ideally suited for applications where high loads are needed, and limited space is available.

Material
Chrome Silicon per Associated Spring SV 9254 - rectangular wire with rounded corners.

Direction of Helix
Right hand.

Ends
Squared and ground.

Finish
Standard finish is that of the normal wire. Due to residual stresses induced during the manufacturing process, electroplating is not recommended. Other finishes available on request. See page 311 for alternative finishes.

Tolerances
Free length is for reference only. O.D. and I.D. are designed to fit in hole or over rod as specified in the table below. Outside diameters are dimensioned to allow a minimum of .020" (.51mm) clearance in the specified hole diameter when the spring is in the free state.

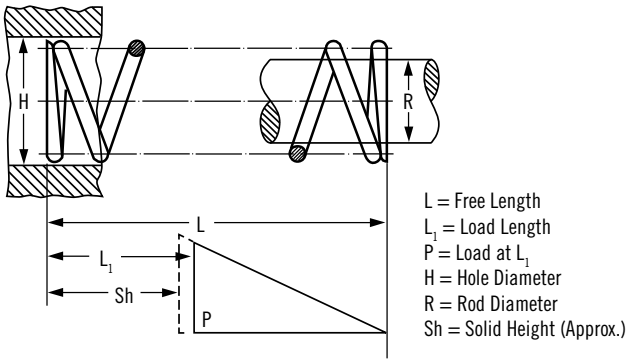

(OD) 0.375 - 0.500

STOCK HEAVY DUTY COMPRESSION SPRINGS

Catalog #	Fits in Hole (H)		Fits over Shaft (R)		Wire Size		Free Length (L)		Load @ Load Length (P) Reference		Load Length (L_1)		Solid Height (Sh) Approx		Spring Rate +/-15%	
	in	mm	in	mm	in	mm	in	mm	lb	N	in	mm	in	mm	lb/in	N/mm
CV0375-1000-039	0.375	9.53	0.188	4.78	0.039 X 0.07	0.99 X 1.78	1.00	25.40	15.00	66.72	0.75	19.05	0.50	12.70	60.00	10.51
CV0375-1250-039	0.375	9.53	0.188	4.78	0.039 X 0.07	0.99 X 1.78	1.25	31.75	15.60	69.39	0.94	23.83	0.63	16.00	50.00	8.76
CV0375-1500-039	0.375	9.53	0.188	4.78	0.039 X 0.07	0.99 X 1.78	1.50	38.10	15.80	70.28	1.13	28.58	0.75	19.05	42.00	7.36
CV0375-1750-039	0.375	9.53	0.188	4.78	0.039 X 0.07	0.99 X 1.78	1.75	44.45	16.20	72.06	1.31	33.35	0.88	22.35	37.00	6.48
CV0375-2000-039	0.375	9.53	0.188	4.78	0.039 X 0.07	0.99 X 1.78	2.00	50.80	15.50	68.95	1.50	38.10	1.00	25.40	31.00	5.43
CV0375-2500-039	0.375	9.53	0.188	4.78	0.039 X 0.07	0.99 X 1.78	2.50	63.50	16.30	72.51	1.88	47.63	1.25	31.75	26.00	4.55
CV0375-3000-039	0.375	9.53	0.188	4.78	0.039 X 0.07	0.99 X 1.78	3.00	76.20	15.80	70.28	2.25	57.15	1.50	38.10	21.00	3.68
CV0375-12000-039	0.375	9.53	0.188	4.78	0.039 X 0.07	0.99 X 1.78	12.00	304.80	18.00	80.07	9.00	228.60	6.00	152.40	6.00	1.05
CV0375-1000-046	0.375	9.53	0.188	4.78	0.046 X 0.073	1.17 X 1.85	1.00	25.40	21.00	93.41	0.75	19.05	0.63	16.00	84.00	14.71
CV0375-1250-046	0.375	9.53	0.188	4.78	0.046 X 0.073	1.17 X 1.85	1.25	31.75	22.80	101.42	0.94	23.83	0.79	20.07	73.00	12.78
CV0375-1500-046	0.375	9.53	0.188	4.78	0.046 X 0.073	1.17 X 1.85	1.50	38.10	25.10	111.65	1.13	28.58	0.95	24.13	67.00	11.73
CV0375-1750-046	0.375	9.53	0.188	4.78	0.046 X 0.073	1.17 X 1.85	1.75	44.45	25.30	112.54	1.31	33.35	1.10	27.94	58.00	10.16
CV0375-2000-046	0.375	9.53	0.188	4.78	0.046 X 0.073	1.17 X 1.85	2.00	50.80	25.00	111.21	1.50	38.10	1.26	32.00	50.00	8.76
CV0375-2500-046	0.375	9.53	0.188	4.78	0.046 X 0.073	1.17 X 1.85	2.50	63.50	23.10	102.75	1.88	47.63	1.58	40.13	37.00	6.48
CV0375-3000-046	0.375	9.53	0.188	4.78	0.046 X 0.073	1.17 X 1.85	3.00	76.20	22.50	100.08	2.25	57.15	1.89	48.01	30.00	5.25
CV0375-12000-046	0.375	9.53	0.188	4.78	0.046 X 0.073	1.17 X 1.85	12.00	304.80	24.00	106.76	9.00	228.60	7.56	192.02	8.00	1.40
CV0375-1000-054	0.375	9.53	0.188	4.78	0.054 X 0.072	1.37 X 1.83	1.00	25.40	17.40	77.40	0.85	21.59	0.70	17.78	116.00	20.31
CV0375-1250-054	0.375	9.53	0.188	4.78	0.054 X 0.072	1.37 X 1.83	1.25	31.75	18.30	81.40	1.06	27.00	0.88	22.35	98.00	17.16
CV0375-1500-054	0.375	9.53	0.188	4.78	0.054 X 0.072	1.37 X 1.83	1.50	38.10	18.00	80.07	1.28	32.39	1.05	26.67	80.00	14.01
CV0375-1750-054	0.375	9.53	0.188	4.78	0.054 X 0.072	1.37 X 1.83	1.75	44.45	19.70	87.63	1.49	37.80	1.23	31.24	75.00	13.13
CV0375-2000-054	0.375	9.53	0.188	4.78	0.054 X 0.072	1.37 X 1.83	2.00	50.80	18.60	82.74	1.70	43.18	1.40	35.56	62.00	10.86
CV0375-2500-054	0.375	9.53	0.188	4.78	0.054 X 0.072	1.37 X 1.83	2.50	63.50	18.80	83.63	2.13	53.98	1.75	44.45	50.00	8.76
CV0375-3000-054	0.375	9.53	0.188	4.78	0.054 X 0.072	1.37 X 1.83	3.00	76.20	18.50	82.29	2.55	64.77	2.10	53.34	41.00	7.18
CV0375-12000-054	0.375	9.53	0.188	4.78	0.054 X 0.072	1.37 X 1.83	12.00	304.80	19.80	88.07	10.20	259.08	8.40	213.36	11.00	1.93
CV0375-1000-059	0.375	9.53	0.188	4.78	0.059 X 0.08	1.5 X 2.03	1.00	25.40	31.50	140.12	0.85	21.59	0.75	19.05	210.00	36.78
CV0375-1250-059	0.375	9.53	0.188	4.78	0.059 X 0.08	1.5 X 2.03	1.25	31.75	27.30	121.44	1.06	27.00	0.94	23.88	146.00	25.57
CV0375-1500-059	0.375	9.53	0.188	4.78	0.059 X 0.08	1.5 X 2.03	1.50	38.10	28.10	124.99	1.28	32.39	1.13	28.70	125.00	21.89
CV0375-1750-059	0.375	9.53	0.188	4.78	0.059 X 0.08	1.5 X 2.03	1.75	44.45	27.50	122.33	1.49	37.80	1.31	33.27	105.00	18.39
CV0375-2000-059	0.375	9.53	0.188	4.78	0.059 X 0.08	1.5 X 2.03	2.00	50.80	27.00	120.10	1.70	43.18	1.50	38.10	90.00	15.76
CV0375-2500-059	0.375	9.53	0.188	4.78	0.059 X 0.08	1.5 X 2.03	2.50	63.50	28.10	124.99	2.13	53.98	1.88	47.75	75.00	13.13
CV0375-3000-059	0.375	9.53	0.188	4.78	0.059 X 0.08	1.5 X 2.03	3.00	76.20	28.40	126.33	2.55	64.77	2.25	57.15	63.00	11.03
CV0375-12000-059	0.375	9.53	0.188	4.78	0.059 X 0.08	1.5 X 2.03	12.00	304.80	27.00	120.10	10.20	259.08	9.00	228.60	15.00	2.63
CV0500-1000-052	0.500	12.70	0.281	7.14	0.052 X 0.093	1.32 X 2.36	1.00	25.40	27.50	122.33	0.75	19.05	0.50	12.70	110.00	19.26
CV0500-1250-052	0.500	12.70	0.281	7.14	0.052 X 0.093	1.32 X 2.36	1.25	31.75	25.60	113.87	0.94	23.83	0.63	16.00	82.00	14.36
CV0500-1500-052	0.500	12.70	0.281	7.14	0.052 X 0.093	1.32 X 2.36	1.50	38.10	25.50	113.43	1.13	28.58	0.75	19.05	68.00	11.91
CV0500-1750-052	0.500	12.70	0.281	7.14	0.052 X 0.093	1.32 X 2.36	1.75	44.45	26.20	116.54	1.31	33.35	0.88	22.35	60.00	10.51

STOCK HEAVY DUTY COMPRESSION SPRINGS

Catalog #	Fits in Hole (H)		Fits over Shaft (R)		Wire Size		Free Length (L)		Load @ Load Length (P) Reference		Load Length (L_1)		Solid Height (Sh) Approx		Spring Rate +/-15%	
	in	mm	in	mm	in	mm	in	mm	lb	N	in	mm	in	mm	lb/in	N/mm
CV0500-2000-052	0.500	12.70	0.281	7.14	0.052 X 0.093	1.32 X 2.36	2.00	50.80	27.50	122.33	1.50	38.10	1.00	25.40	55.00	9.63
CV0500-2500-052	0.500	12.70	0.281	7.14	0.052 X 0.093	1.32 X 2.36	2.50	63.50	28.10	124.99	1.88	47.63	1.25	31.75	45.00	7.88
CV0500-3000-052	0.500	12.70	0.281	7.14	0.052 X 0.093	1.32 X 2.36	3.00	76.20	26.30	116.99	2.25	57.15	1.50	38.10	35.00	6.13
CV0500-3500-052	0.500	12.70	0.281	7.14	0.052 X 0.093	1.32 X 2.36	3.50	88.90	26.30	116.99	2.63	66.68	1.75	44.45	30.00	5.25
CV0500-4500-052	0.500	12.70	0.281	7.14	0.052 X 0.093	1.32 X 2.36	4.50	114.30	25.90	115.21	3.38	85.73	2.25	57.15	23.00	4.03
CV0500-5500-052	0.500	12.70	0.281	7.14	0.052 X 0.093	1.32 X 2.36	5.50	139.70	27.50	122.33	4.13	104.78	2.75	69.85	20.00	3.50
CV0500-6500-052	0.500	12.70	0.281	7.14	0.052 X 0.093	1.32 X 2.36	6.50	165.10	22.80	101.42	4.88	123.83	3.25	82.55	14.00	2.45
CV0500-7500-052	0.500	12.70	0.281	7.14	0.052 X 0.093	1.32 X 2.36	7.50	190.50	22.50	100.08	5.63	142.88	3.75	95.25	12.00	2.10
CV0500-12000-052	0.500	12.70	0.281	7.14	0.052 X 0.093	1.32 X 2.36	12.00	304.80	21.00	93.41	9.00	228.60	6.00	152.40	7.00	1.23
CV0500-1000-061	0.500	12.70	0.281	7.14	0.061 X 0.094	1.55 X 2.39	1.00	25.40	38.80	172.59	0.75	19.05	0.63	16.00	155.00	27.14
CV0500-1250-061	0.500	12.70	0.281	7.14	0.061 X 0.094	1.55 X 2.39	1.25	31.75	38.10	169.48	0.94	23.83	0.79	20.07	122.00	21.37
CV0500-1500-061	0.500	12.70	0.281	7.14	0.061 X 0.094	1.55 X 2.39	1.50	38.10	36.80	163.69	1.13	28.58	0.95	24.13	98.00	17.16
CV0500-1750-061	0.500	12.70	0.281	7.14	0.061 X 0.094	1.55 X 2.39	1.75	44.45	37.10	165.03	1.31	33.35	1.10	27.94	85.00	14.89
CV0500-2000-061	0.500	12.70	0.281	7.14	0.061 X 0.094	1.55 X 2.39	2.00	50.80	37.50	166.81	1.50	38.10	1.26	32.00	75.00	13.13
CV0500-2500-061	0.500	12.70	0.281	7.14	0.061 X 0.094	1.55 X 2.39	2.50	63.50	37.50	166.81	1.88	47.63	1.58	40.13	60.00	10.51
CV0500-3000-061	0.500	12.70	0.281	7.14	0.061 X 0.094	1.55 X 2.39	3.00	76.20	38.30	170.37	2.25	57.15	1.89	48.01	51.00	8.93
CV0500-3500-061	0.500	12.70	0.281	7.14	0.061 X 0.094	1.55 X 2.39	3.50	88.90	35.00	155.69	2.63	66.68	2.21	56.13	40.00	7.01
CV0500-12000-061	0.500	12.70	0.281	7.14	0.061 X 0.094	1.55 X 2.39	12.00	304.80	33.00	146.79	9.00	228.60	7.56	192.02	11.00	1.93
CV0500-1000-072	0.500	12.70	0.281	7.14	0.072 X 0.095	1.83 X 2.41	1.00	25.40	33.80	150.35	0.85	21.59	0.70	17.78	225.00	39.40
CV0500-1250-072	0.500	12.70	0.281	7.14	0.072 X 0.095	1.83 X 2.41	1.25	31.75	34.20	152.13	1.06	26.97	0.88	22.35	182.00	31.87
CV0500-1500-072	0.500	12.70	0.281	7.14	0.072 X 0.095	1.83 X 2.41	1.50	38.10	33.30	148.13	1.28	32.39	1.05	26.67	148.00	25.92
CV0500-1750-072	0.500	12.70	0.281	7.14	0.072 X 0.095	1.83 X 2.41	1.75	44.45	33.10	147.24	1.49	37.77	1.23	31.24	126.00	22.07
CV0500-2000-072	0.500	12.70	0.281	7.14	0.072 X 0.095	1.83 X 2.41	2.00	50.80	33.00	146.79	1.70	43.18	1.40	35.56	110.00	19.26
CV0500-2500-072	0.500	12.70	0.281	7.14	0.072 X 0.095	1.83 X 2.41	2.50	63.50	32.30	143.68	2.13	53.98	1.75	44.45	86.00	15.06
CV0500-3000-072	0.500	12.70	0.281	7.14	0.072 X 0.095	1.83 X 2.41	3.00	76.20	33.30	148.13	2.55	64.77	2.10	53.34	74.00	12.96
CV0500-3500-072	0.500	12.70	0.281	7.14	0.072 X 0.095	1.83 X 2.41	3.50	88.90	31.50	140.12	2.98	75.57	2.45	62.23	60.00	10.51
CV0500-12000-072	0.500	12.70	0.281	7.14	0.072 X 0.095	1.83 X 2.41	12.00	304.80	30.60	136.12	10.20	259.08	8.40	213.36	17.00	2.98
CV0500-1000-084	0.500	12.70	0.281	7.14	0.084 X 0.097	2.13 X 2.46	1.00	25.40	46.50	206.84	0.85	21.59	0.75	19.05	310.00	54.29
CV0500-1250-084	0.500	12.70	0.281	7.14	0.084 X 0.097	2.13 X 2.46	1.25	31.75	45.10	200.61	1.06	26.97	0.94	23.88	240.00	42.03
CV0500-1500-084	0.500	12.70	0.281	7.14	0.084 X 0.097	2.13 X 2.46	1.50	38.10	43.20	192.16	1.28	32.39	1.13	28.70	192.00	33.62
CV0500-1750-084	0.500	12.70	0.281	7.14	0.084 X 0.097	2.13 X 2.46	1.75	44.45	44.70	198.84	1.49	37.77	1.31	33.27	170.00	29.77
CV0500-2000-084	0.500	12.70	0.281	7.14	0.084 X 0.097	2.13 X 2.46	2.00	50.80	42.00	186.83	1.70	43.18	1.50	38.10	140.00	24.52
CV0500-2500-084	0.500	12.70	0.281	7.14	0.084 X 0.097	2.13 X 2.46	2.50	63.50	43.10	191.72	2.13	53.98	1.88	47.75	115.00	20.14
CV0500-3000-084	0.500	12.70	0.281	7.14	0.084 X 0.097	2.13 X 2.46	3.00	76.20	42.30	188.16	2.55	64.77	2.25	57.15	94.00	16.46
CV0500-3500-084	0.500	12.70	0.281	7.14	0.084 X 0.097	2.13 X 2.46	3.50	88.90	42.00	186.83	2.98	75.57	2.63	66.80	80.00	14.01
CV0500-12000-084	0.500	12.70	0.281	7.14	0.084 X 0.097	2.13 X 2.46	12.00	304.80	43.20	192.16	10.20	259.08	9.00	228.60	24.00	4.20
CV0625-1000-069	0.625	15.88	0.344	8.74	0.069 X 0.109	1.75 X 2.77	1.00	25.40	41.00	182.38	0.75	19.05	0.53	13.46	164.00	28.72
CV0625-1250-069	0.625	15.88	0.344	8.74	0.069 X 0.109	1.75 X 2.77	1.25	31.75	38.80	172.59	0.94	23.80	0.68	17.27	124.00	21.72
CV0625-1500-069	0.625	15.88	0.344	8.74	0.069 X 0.109	1.75 X 2.77	1.50	38.10	40.50	180.15	1.13	28.58	0.75	19.05	108.00	18.91
CV0625-1750-069	0.625	15.88	0.344	8.74	0.069 X 0.109	1.75 X 2.77	1.75	44.45	42.00	186.83	1.31	33.32	0.88	22.35	96.00	16.81
CV0625-2000-069	0.625	15.88	0.344	8.74	0.069 X 0.109	1.75 X 2.77	2.00	50.80	43.00	191.27	1.50	38.10	1.00	25.40	86.00	15.06
CV0625-2500-069	0.625	15.88	0.344	8.74	0.069 X 0.109	1.75 X 2.77	2.50	63.50	40.60	180.60	1.88	47.63	1.25	31.75	65.00	11.38
CV0625-3000-069	0.625	15.88	0.344	8.74	0.069 X 0.109	1.75 X 2.77	3.00	76.20	43.50	193.50	2.25	57.15	1.50	38.10	58.00	10.16
CV0625-3500-069	0.625	15.88	0.344	8.74	0.069 X 0.109	1.75 X 2.77	3.50	88.90	43.80	194.83	2.63	66.68	1.75	44.45	50.00	8.76
CV0625-4000-069	0.625	15.88	0.344	8.74	0.069 X 0.109	1.75 X 2.77	4.00	101.60	44.00	195.72	3.00	76.20	2.00	50.80	44.00	7.71
CV0625-12000-069	0.625	15.88	0.344	8.74	0.069 X 0.109	1.75 X 2.77	12.00	304.80	45.00	200.17	9.00	228.60	6.00	152.40	15.00	2.63
CV0625-1000-081	0.625	15.88	0.344	8.74	0.081 X 0.123	2.06 X 3.12	1.00	25.40	75.00	333.62	0.75	19.05	0.63	16.00	300.00	52.54
CV0625-1250-081	0.625	15.88	0.344	8.74	0.081 X 0.123	2.06 X 3.12	1.25	31.75	67.30	299.37	0.94	23.80	0.79	20.07	215.00	37.65
CV0625-1500-081	0.625	15.88	0.344	8.74	0.081 X 0.123	2.06 X 3.12	1.50	38.10	71.30	317.16	1.13	28.58	0.95	24.13	190.00	33.27
CV0625-1750-081	0.625	15.88	0.344	8.74	0.081 X 0.123	2.06 X 3.12	1.75	44.45	73.60	327.39	1.31	33.32	1.10	27.94	168.00	29.42
CV0625-2000-081	0.625	15.88	0.344	8.74	0.081 X 0.123	2.06 X 3.12	2.00	50.80	77.50	344.74	1.50	38.10	1.26	32.00	155.00	27.14
CV0625-2500-081	0.625	15.88	0.344	8.74	0.081 X 0.123	2.06 X 3.12	2.50	63.50	71.90	319.83	1.88	47.63	1.58	40.13	115.00	20.14
CV0625-3000-081	0.625	15.88	0.344	8.74	0.081 X 0.123	2.06 X 3.12	3.00	76.20	75.00	333.62	2.25	57.15	1.89	48.01	100.00	17.51
CV0625-3500-081	0.625	15.88	0.344	8.74	0.081 X 0.123	2.06 X 3.12	3.50	88.90	74.40	330.95	2.63	66.68	2.21	56.13	85.00	14.89
CV0625-4000-081	0.625	15.88	0.344	8.74	0.081 X 0.123	2.06 X 3.12	4.00	101.60	76.00	338.06	3.00	76.20	2.52	64.01	76.00	13.31
CV0625-12000-081	0.625	15.88	0.344	8.74	0.081 X 0.123	2.06 X 3.12	12.00	304.80	78.00	346.96	9.00	228.60	7.56	192.02	26.00	4.55
CV0625-1000-093	0.625	15.88	0.344	8.74	0.093 X 0.125	2.36 X 3.18	1.00	25.40	63.60	282.91	0.85	21.59	0.70	17.78	424.00	74.25
CV0625-1250-093	0.625	15.88	0.344	8.74	0.093 X 0.125	2.36 X 3.18	1.25	31.75	61.10	271.79	1.06	26.97	0.88	22.35	325.00	56.92
CV0625-1500-093	0.625	15.88	0.344	8.74	0.093 X 0.125	2.36 X 3.18	1.50	38.10	63.00	280.24	1.28	32.39	1.05	26.67	280.00	49.04
CV0625-1750-093	0.625	15.88	0.344	8.74	0.093 X 0.125	2.36 X 3.18	1.75	44.45	63.10	280.68	1.49	37.77	1.23	31.24	240.00	42.03
CV0625-2000-093	0.625	15.88	0.344	8.74	0.093 X 0.125	2.36 X 3.18	2.00	50.80	62.40	277.57	1.70	43.18	1.40	35.56	208.00	36.43
CV0625-2500-093	0.625	15.88	0.344	8.74	0.093 X 0.125	2.36 X 3.18	2.50	63.50	63.80	283.80	2.13	53.98	1.75	44.45	170.00	29.77
CV0625-3000-093	0.625	15.88	0.344	8.74	0.093 X 0.125	2.36 X 3.18	3.00	76.20	63.00	280.24	2.55	64.77	2.10	53.34	140.00	24.52
CV0625-3500-093	0.625	15.88	0.344	8.74	0.093 X 0.125	2.36 X 3.18	3.50	88.90	64.10	285.13	2.98	75.57	2.45	62.23	122.00	21.37

FOR INFORMATION ON ALTERNATIVE FINISHES, SEE PAGE 311

STOCK HEAVY DUTY COMPRESSION SPRINGS

Catalog #	Fits in Hole (H)		Fits over Shaft (R)		Wire Size		Free Length (L)		Load @ Load Length (P) Reference		Load Length (L_1)		Solid Height (Sh) Approx		Spring Rate +/-15%	
	in	mm	in	mm	in	mm	in	mm	lb	N	in	mm	in	mm	lb/in	N/mm
CV0625-4000-093	0.625	15.88	0.344	8.74	0.093 X 0.125	2.36 X 3.18	4.00	101.60	64.80	288.24	3.40	86.36	2.80	71.12	108.00	18.91
CV0625-12000-093	0.625	15.88	0.344	8.74	0.093 X 0.125	2.36 X 3.18	12.00	304.80	54.00	240.20	10.20	259.08	8.40	213.36	30.00	5.25
CV0625-1000-110	0.625	15.88	0.344	8.74	0.11 X 0.126	2.79 X 3.2	1.00	25.40	94.50	420.36	0.85	21.59	0.75	19.05	630.00	110.33
CV0625-1250-110	0.625	15.88	0.344	8.74	0.11 X 0.126	2.79 X 3.2	1.25	31.75	82.30	366.09	1.06	26.97	0.94	23.88	438.00	76.71
CV0625-1500-110	0.625	15.88	0.344	8.74	0.11 X 0.126	2.79 X 3.2	1.50	38.10	83.30	370.54	1.28	32.39	1.13	28.70	370.00	64.80
CV0625-1750-110	0.625	15.88	0.344	8.74	0.11 X 0.126	2.79 X 3.2	1.75	44.45	81.50	362.53	1.49	37.77	1.31	33.27	310.00	54.29
CV0625-2000-110	0.625	15.88	0.344	8.74	0.11 X 0.126	2.79 X 3.2	2.00	50.80	84.00	373.65	1.70	43.18	1.50	38.10	280.00	49.04
CV0625-2500-110	0.625	15.88	0.344	8.74	0.11 X 0.126	2.79 X 3.2	2.50	63.50	82.50	366.98	2.13	53.98	1.88	47.75	220.00	38.53
CV0625-3000-110	0.625	15.88	0.344	8.74	0.11 X 0.126	2.79 X 3.2	3.00	76.20	85.50	380.32	2.55	64.77	2.25	57.15	190.00	33.27
CV0625-3500-110	0.625	15.88	0.344	8.74	0.11 X 0.126	2.79 X 3.2	3.50	88.90	80.90	359.86	2.98	75.57	2.63	66.80	154.00	26.97
CV0625-4000-110	0.625	15.88	0.344	8.74	0.11 X 0.126	2.79 X 3.2	4.00	101.60	81.00	360.31	3.40	86.36	3.00	76.20	135.00	23.64
CV0625-12000-110	0.625	15.88	0.344	8.74	0.11 X 0.126	2.79 X 3.2	12.00	304.80	81.00	360.31	10.20	259.08	9.00	228.60	45.00	7.88
CV0750-1000-075	0.750	19.05	0.375	9.53	0.075 X 0.165	1.91 X 4.19	1.00	25.40	80.00	355.86	0.75	19.05	0.50	12.70	320.00	56.04
CV0750-1250-075	0.750	19.05	0.375	9.53	0.075 X 0.165	1.91 X 4.19	1.25	31.75	80.10	356.30	0.94	23.80	0.65	16.51	256.00	44.83
CV0750-1500-075	0.750	19.05	0.375	9.53	0.075 X 0.165	1.91 X 4.19	1.50	38.10	75.00	333.62	1.13	28.58	0.78	19.81	200.00	35.03
CV0750-1750-075	0.750	19.05	0.375	9.53	0.075 X 0.165	1.91 X 4.19	1.75	44.45	77.10	342.96	1.31	33.32	0.88	22.35	176.00	30.82
CV0750-2000-075	0.750	19.05	0.375	9.53	0.075 X 0.165	1.91 X 4.19	2.00	50.80	75.00	333.62	1.50	38.10	1.00	25.40	150.00	26.27
CV0750-2500-075	0.750	19.05	0.375	9.53	0.075 X 0.165	1.91 X 4.19	2.50	63.50	75.00	333.62	1.88	47.63	1.25	31.75	120.00	21.02
CV0750-3000-075	0.750	19.05	0.375	9.53	0.075 X 0.165	1.91 X 4.19	3.00	76.20	75.80	337.18	2.25	57.15	1.50	38.10	101.00	17.69
CV0750-3500-075	0.750	19.05	0.375	9.53	0.075 X 0.165	1.91 X 4.19	3.50	88.90	72.60	322.94	2.63	66.68	1.75	44.45	83.00	14.54
CV0750-4000-075	0.750	19.05	0.375	9.53	0.075 X 0.165	1.91 X 4.19	4.00	101.60	75.00	333.62	3.00	76.20	2.00	50.80	75.00	13.13
CV0750-4500-075	0.750	19.05	0.375	9.53	0.075 X 0.165	1.91 X 4.19	4.50	114.30	72.00	320.27	3.38	85.73	2.25	57.15	64.00	11.21
CV0750-5000-075	0.750	19.05	0.375	9.53	0.075 X 0.165	1.91 X 4.19	5.00	127.00	75.00	333.62	3.75	95.25	2.50	63.50	60.00	10.51
CV0750-5500-075	0.750	19.05	0.375	9.53	0.075 X 0.165	1.91 X 4.19	5.50	139.70	75.60	336.29	4.13	104.78	2.75	69.85	55.00	9.63
CV0750-6000-075	0.750	19.05	0.375	9.53	0.075 X 0.165	1.91 X 4.19	6.00	152.40	75.00	333.62	4.50	114.30	3.00	76.20	50.00	8.76
CV0750-6500-075	0.750	19.05	0.375	9.53	0.075 X 0.165	1.91 X 4.19	6.50	165.10	76.40	339.84	4.88	123.83	3.25	82.55	47.00	8.23
CV0750-7500-075	0.750	19.05	0.375	9.53	0.075 X 0.165	1.91 X 4.19	7.50	190.50	71.30	317.16	5.63	142.88	3.75	95.25	38.00	6.65
CV0750-12000-075	0.750	19.05	0.375	9.53	0.075 X 0.165	1.91 X 4.19	12.00	304.80	72.00	320.27	9.00	228.60	6.00	152.40	24.00	4.20
CV0750-1000-093	0.750	19.05	0.375	9.53	0.093 X 0.156	2.36 X 3.96	1.00	25.40	125.00	556.03	0.75	19.05	0.63	16.00	500.00	87.56
CV0750-1250-093	0.750	19.05	0.375	9.53	0.093 X 0.156	2.36 X 3.96	1.25	31.75	118.90	528.89	0.94	23.80	0.79	20.07	380.00	66.55
CV0750-1500-093	0.750	19.05	0.375	9.53	0.093 X 0.156	2.36 X 3.96	1.50	38.10	116.30	517.33	1.13	28.58	0.95	24.13	310.00	54.29
CV0750-1750-093	0.750	19.05	0.375	9.53	0.093 X 0.156	2.36 X 3.96	1.75	44.45	118.30	526.22	1.31	33.32	1.10	27.94	270.00	47.28
CV0750-2000-093	0.750	19.05	0.375	9.53	0.093 X 0.156	2.36 X 3.96	2.00	50.80	120.00	533.79	1.50	38.10	1.26	32.00	240.00	42.03
CV0750-2500-093	0.750	19.05	0.375	9.53	0.093 X 0.156	2.36 X 3.96	2.50	63.50	117.50	522.67	1.88	47.63	1.58	40.13	188.00	32.92
CV0750-3000-093	0.750	19.05	0.375	9.53	0.093 X 0.156	2.36 X 3.96	3.00	76.20	111.80	497.31	2.25	57.15	1.89	48.01	149.00	26.09
CV0750-3500-093	0.750	19.05	0.375	9.53	0.093 X 0.156	2.36 X 3.96	3.50	88.90	112.00	498.20	2.63	66.68	2.21	56.13	128.00	22.42
CV0750-4000-093	0.750	19.05	0.375	9.53	0.093 X 0.156	2.36 X 3.96	4.00	101.60	110.00	489.30	3.00	76.20	2.52	64.01	110.00	19.26
CV0750-4500-093	0.750	19.05	0.375	9.53	0.093 X 0.156	2.36 X 3.96	4.50	114.30	112.50	500.42	3.38	85.73	2.84	72.14	100.00	17.51
CV0750-5000-093	0.750	19.05	0.375	9.53	0.093 X 0.156	2.36 X 3.96	5.00	127.00	112.50	500.42	3.75	95.25	3.15	80.01	90.00	15.76
CV0750-5500-093	0.750	19.05	0.375	9.53	0.093 X 0.156	2.36 X 3.96	5.50	139.70	110.00	489.30	4.13	104.78	3.47	88.14	80.00	14.01
CV0750-6000-093	0.750	19.05	0.375	9.53	0.093 X 0.156	2.36 X 3.96	6.00	152.40	112.50	500.42	4.50	114.30	3.78	96.01	75.00	13.13
CV0750-12000-093	0.750	19.05	0.375	9.53	0.093 X 0.156	2.36 X 3.96	12.00	304.80	105.00	467.06	9.00	228.60	7.56	192.02	35.00	6.13
CV0750-1000-125	0.750	19.05	0.375	9.53	0.125 X 0.165	3.18 X 4.19	1.00	25.40	162.00	720.61	0.85	21.59	0.73	18.54	1080.00	189.14
CV0750-1250-125	0.750	19.05	0.375	9.53	0.125 X 0.165	3.18 X 4.19	1.25	31.75	165.40	735.74	1.06	26.97	0.90	22.86	880.00	154.11
CV0750-1500-125	0.750	19.05	0.375	9.53	0.125 X 0.165	3.18 X 4.19	1.50	38.10	155.30	690.81	1.28	32.39	1.05	26.67	690.00	120.84
CV0750-1750-125	0.750	19.05	0.375	9.53	0.125 X 0.165	3.18 X 4.19	1.75	44.45	157.80	701.93	1.49	37.77	1.23	31.24	600.00	105.08
CV0750-2000-125	0.750	19.05	0.375	9.53	0.125 X 0.165	3.18 X 4.19	2.00	50.80	154.50	687.25	1.70	43.18	1.40	35.56	515.00	90.19
CV0750-2500-125	0.750	19.05	0.375	9.53	0.125 X 0.165	3.18 X 4.19	2.50	63.50	150.00	667.23	2.13	53.98	1.75	44.45	400.00	70.05
CV0750-3000-125	0.750	19.05	0.375	9.53	0.125 X 0.165	3.18 X 4.19	3.00	76.20	148.50	660.56	2.55	64.77	2.10	53.34	330.00	57.79
CV0750-3500-125	0.750	19.05	0.375	9.53	0.125 X 0.165	3.18 X 4.19	3.50	88.90	152.30	677.46	2.98	75.57	2.45	62.23	290.00	50.79
CV0750-4000-125	0.750	19.05	0.375	9.53	0.125 X 0.165	3.18 X 4.19	4.00	101.60	150.00	667.23	3.40	86.36	2.80	71.12	250.00	43.78
CV0750-4500-125	0.750	19.05	0.375	9.53	0.125 X 0.165	3.18 X 4.19	4.50	114.30	148.50	660.56	3.83	97.16	3.15	80.01	220.00	38.53
CV0750-5000-125	0.750	19.05	0.375	9.53	0.125 X 0.165	3.18 X 4.19	5.00	127.00	146.30	650.77	4.25	107.95	3.50	88.90	195.00	34.15
CV0750-5500-125	0.750	19.05	0.375	9.53	0.125 X 0.165	3.18 X 4.19	5.50	139.70	146.90	653.44	4.68	118.75	3.85	97.79	178.00	31.17
CV0750-6000-125	0.750	19.05	0.375	9.53	0.125 X 0.165	3.18 X 4.19	6.00	152.40	144.00	640.54	5.10	129.54	4.20	106.68	160.00	28.02
CV0750-12000-125	0.750	19.05	0.375	9.53	0.125 X 0.165	3.18 X 4.19	12.00	304.80	144.00	640.54	10.20	259.08	8.40	213.36	80.00	14.01
CV0750-1000-135	0.750	19.05	0.375	9.53	0.135 X 0.165	3.43 X 4.19	1.00	25.40	210.00	934.13	0.85	21.59	0.75	19.05	1400.00	245.18
CV0750-1250-135	0.750	19.05	0.375	9.53	0.135 X 0.165	3.43 X 4.19	1.25	31.75	206.80	919.89	1.06	26.97	0.94	23.88	1100.00	192.64
CV0750-1500-135	0.750	19.05	0.375	9.53	0.135 X 0.165	3.43 X 4.19	1.50	38.10	200.30	890.98	1.28	32.39	1.13	28.70	890.00	155.86
CV0750-1750-135	0.750	19.05	0.375	9.53	0.135 X 0.165	3.43 X 4.19	1.75	44.45	197.30	877.63	1.49	37.77	1.31	33.27	750.00	131.35
CV0750-2000-135	0.750	19.05	0.375	9.53	0.135 X 0.165	3.43 X 4.19	2.00	50.80	198.00	880.75	1.70	43.18	1.50	38.10	660.00	115.58
CV0750-2500-135	0.750	19.05	0.375	9.53	0.135 X 0.165	3.43 X 4.19	2.50	63.50	187.50	834.04	2.13	53.98	1.88	47.75	500.00	87.56
CV0750-3000-135	0.750	19.05	0.375	9.53	0.135 X 0.165	3.43 X 4.19	3.00	76.20	182.30	810.91	2.55	64.77	2.25	57.15	405.00	70.93
CV0750-3500-135	0.750	19.05	0.375	9.53	0.135 X 0.165	3.43 X 4.19	3.50	88.90	181.10	805.57	2.98	75.57	2.63	66.80	345.00	60.42

STOCK HEAVY DUTY COMPRESSION SPRINGS

Catalog #	Fits in Hole (H)		Fits over Shaft (R)		Wire Size		Free Length (L)		Load @ Load Length (P) Reference		Load Length (L_1)		Solid Height (Sh) Approx		Spring Rate +/-15%	
	in	mm	in	mm	in	mm	in	mm	lb	N	in	mm	in	mm	lb/in	N/mm
CV0750-4000-135	0.750	19.05	0.375	9.53	0.135 X 0.165	3.43 X 4.19	4.00	101.60	180.00	800.68	3.40	86.36	3.00	76.20	300.00	52.54
CV0750-4500-135	0.750	19.05	0.375	9.53	0.135 X 0.165	3.43 X 4.19	4.50	114.30	178.90	795.79	3.83	97.16	3.38	85.85	265.00	46.41
CV0750-5000-135	0.750	19.05	0.375	9.53	0.135 X 0.165	3.43 X 4.19	5.00	127.00	176.30	784.22	4.25	107.95	3.75	95.25	235.00	41.15
CV0750-5500-135	0.750	19.05	0.375	9.53	0.135 X 0.165	3.43 X 4.19	5.50	139.70	177.40	789.11	4.68	118.75	4.13	104.90	215.00	37.65
CV0750-6000-135	0.750	19.05	0.375	9.53	0.135 X 0.165	3.43 X 4.19	6.00	152.40	175.50	780.66	5.10	129.54	4.50	114.30	195.00	34.15
CV0750-12000-135	0.750	19.05	0.375	9.53	0.135 X 0.165	3.43 X 4.19	12.00	304.80	171.00	760.65	10.20	259.08	9.00	228.60	95.00	16.64
CV1000-1000-100	1.000	25.40	0.500	12.70	0.1 X 0.215	2.54 X 5.46	1.00	25.40	137.50	611.63	0.75	19.05	0.60	15.24	550.00	96.32
CV1000-1250-100	1.000	25.40	0.500	12.70	0.1 X 0.215	2.54 X 5.46	1.25	31.75	140.90	626.75	0.94	23.80	0.70	17.78	450.00	78.81
CV1000-1500-100	1.000	25.40	0.500	12.70	0.1 X 0.215	2.54 X 5.46	1.50	38.10	139.90	622.31	1.13	28.58	0.80	20.32	373.00	65.32
CV1000-1750-100	1.000	25.40	0.500	12.70	0.1 X 0.215	2.54 X 5.46	1.75	44.45	140.20	623.64	1.31	33.32	0.88	22.35	320.00	56.04
CV1000-2000-100	1.000	25.40	0.500	12.70	0.1 X 0.215	2.54 X 5.46	2.00	50.80	134.00	596.06	1.50	38.10	1.00	25.40	268.00	46.93
CV1000-2500-100	1.000	25.40	0.500	12.70	0.1 X 0.215	2.54 X 5.46	2.50	63.50	130.60	580.94	1.88	47.63	1.25	31.75	209.00	36.60
CV1000-3000-100	1.000	25.40	0.500	12.70	0.1 X 0.215	2.54 X 5.46	3.00	76.20	128.30	570.71	2.25	57.15	1.50	38.10	171.00	29.95
CV1000-3500-100	1.000	25.40	0.500	12.70	0.1 X 0.215	2.54 X 5.46	3.50	88.90	126.90	564.48	2.63	66.68	1.75	44.45	145.00	25.39
CV1000-4000-100	1.000	25.40	0.500	12.70	0.1 X 0.215	2.54 X 5.46	4.00	101.60	125.00	556.03	3.00	76.20	2.00	50.80	125.00	21.89
CV1000-4500-100	1.000	25.40	0.500	12.70	0.1 X 0.215	2.54 X 5.46	4.50	114.30	124.90	555.58	3.38	85.73	2.25	57.15	111.00	19.44
CV1000-5000-100	1.000	25.40	0.500	12.70	0.1 X 0.215	2.54 X 5.46	5.00	127.00	120.00	533.79	3.75	95.25	2.50	63.50	96.00	16.81
CV1000-5500-100	1.000	25.40	0.500	12.70	0.1 X 0.215	2.54 X 5.46	5.50	139.70	121.00	538.23	4.13	104.78	2.75	69.85	88.00	15.41
CV1000-6000-100	1.000	25.40	0.500	12.70	0.1 X 0.215	2.54 X 5.46	6.00	152.40	120.00	533.79	4.50	114.30	3.00	76.20	80.00	14.01
CV1000-7000-100	1.000	25.40	0.500	12.70	0.1 X 0.215	2.54 X 5.46	7.00	177.80	126.00	560.48	5.25	133.35	3.50	88.90	72.00	12.61
CV1000-8000-100	1.000	25.40	0.500	12.70	0.1 X 0.215	2.54 X 5.46	8.00	203.20	120.00	533.79	6.00	152.40	4.00	101.60	60.00	10.51
CV1000-12000-100	1.000	25.40	0.500	12.70	0.1 X 0.215	2.54 X 5.46	12.00	304.80	120.00	533.79	9.00	228.60	6.00	152.40	40.00	7.01
CV1000-1000-115	1.000	25.40	0.500	12.70	0.115 X 0.218	2.92 X 5.54	1.00	25.40	206.80	919.89	0.75	19.05	0.68	17.27	827.00	144.83
CV1000-1250-115	1.000	25.40	0.500	12.70	0.115 X 0.218	2.92 X 5.54	1.25	31.75	204.40	909.22	0.94	23.80	0.79	20.07	653.00	114.36
CV1000-1500-115	1.000	25.40	0.500	12.70	0.115 X 0.218	2.92 X 5.54	1.50	38.10	201.80	897.65	1.13	28.58	0.95	24.13	538.00	94.22
CV1000-1750-115	1.000	25.40	0.500	12.70	0.115 X 0.218	2.92 X 5.54	1.75	44.45	201.90	898.10	1.31	33.32	1.10	27.94	461.00	80.73
CV1000-2000-115	1.000	25.40	0.500	12.70	0.115 X 0.218	2.92 X 5.54	2.00	50.80	200.00	889.64	1.50	38.10	1.26	32.00	400.00	70.05
CV1000-2500-115	1.000	25.40	0.500	12.70	0.115 X 0.218	2.92 X 5.54	2.50	63.50	201.30	895.43	1.88	47.63	1.58	40.13	322.00	56.39
CV1000-3000-115	1.000	25.40	0.500	12.70	0.115 X 0.218	2.92 X 5.54	3.00	76.20	200.30	890.98	2.25	57.15	1.89	48.01	267.00	46.76
CV1000-3500-115	1.000	25.40	0.500	12.70	0.115 X 0.218	2.92 X 5.54	3.50	88.90	200.40	891.42	2.63	66.68	2.21	56.13	229.00	40.10
CV1000-4000-115	1.000	25.40	0.500	12.70	0.115 X 0.218	2.92 X 5.54	4.00	101.60	202.00	898.54	3.00	76.20	2.52	64.01	202.00	35.38
CV1000-4500-115	1.000	25.40	0.500	12.70	0.115 X 0.218	2.92 X 5.54	4.50	114.30	200.30	890.98	3.38	85.73	2.84	72.14	178.00	31.17
CV1000-5000-115	1.000	25.40	0.500	12.70	0.115 X 0.218	2.92 X 5.54	5.00	127.00	196.30	873.19	3.75	95.25	3.15	80.01	157.00	27.49
CV1000-5500-115	1.000	25.40	0.500	12.70	0.115 X 0.218	2.92 X 5.54	5.50	139.70	188.40	838.04	4.13	104.78	3.47	88.14	137.00	23.99
CV1000-6000-115	1.000	25.40	0.500	12.70	0.115 X 0.218	2.92 X 5.54	6.00	152.40	187.50	834.04	4.50	114.30	3.78	96.01	125.00	21.89
CV1000-7000-115	1.000	25.40	0.500	12.70	0.115 X 0.218	2.92 X 5.54	7.00	177.80	190.80	848.72	5.25	133.35	4.41	112.01	109.00	19.09
CV1000-8000-115	1.000	25.40	0.500	12.70	0.115 X 0.218	2.92 X 5.54	8.00	203.20	192.00	854.06	6.00	152.40	5.04	128.02	96.00	16.81
CV1000-12000-115	1.000	25.40	0.500	12.70	0.115 X 0.218	2.92 X 5.54	12.00	304.80	195.00	867.40	9.00	228.60	7.56	192.02	65.00	11.38
CV1000-1000-158	1.000	25.40	0.500	12.70	0.158 X 0.221	4.01 X 5.61	1.00	25.40	289.80	1289.09	0.85	21.59	0.73	18.54	1932.00	338.34
CV1000-1250-158	1.000	25.40	0.500	12.70	0.158 X 0.221	4.01 X 5.61	1.25	31.75	275.40	1225.04	1.06	26.97	0.88	22.35	1465.00	256.56
CV1000-1500-158	1.000	25.40	0.500	12.70	0.158 X 0.221	4.01 X 5.61	1.50	38.10	270.00	1201.02	1.28	32.39	1.05	26.67	1200.00	210.15
CV1000-1750-158	1.000	25.40	0.500	12.70	0.158 X 0.221	4.01 X 5.61	1.75	44.45	273.50	1216.59	1.49	37.77	1.23	31.24	1040.00	182.13
CV1000-2000-158	1.000	25.40	0.500	12.70	0.158 X 0.221	4.01 X 5.61	2.00	50.80	261.60	1163.65	1.70	43.18	1.40	35.56	872.00	152.71
CV1000-2500-158	1.000	25.40	0.500	12.70	0.158 X 0.221	4.01 X 5.61	2.50	63.50	249.40	1109.39	2.13	53.98	1.75	44.45	665.00	116.46
CV1000-3000-158	1.000	25.40	0.500	12.70	0.158 X 0.221	4.01 X 5.61	3.00	76.20	244.80	1088.92	2.55	64.77	2.10	53.34	544.00	95.27
CV1000-3500-158	1.000	25.40	0.500	12.70	0.158 X 0.221	4.01 X 5.61	3.50	88.90	239.40	1064.90	2.98	75.57	2.45	62.23	456.00	79.86
CV1000-4000-158	1.000	25.40	0.500	12.70	0.158 X 0.221	4.01 X 5.61	4.00	101.60	240.00	1067.57	3.40	86.36	2.80	71.12	400.00	70.05
CV1000-4500-158	1.000	25.40	0.500	12.70	0.158 X 0.221	4.01 X 5.61	4.50	114.30	237.60	1056.90	3.83	97.16	3.15	80.01	352.00	61.64
CV1000-5000-158	1.000	25.40	0.500	12.70	0.158 X 0.221	4.01 X 5.61	5.00	127.00	234.00	1040.88	4.25	107.95	3.50	88.90	312.00	54.64
CV1000-5500-158	1.000	25.40	0.500	12.70	0.158 X 0.221	4.01 X 5.61	5.50	139.70	237.60	1056.90	4.68	118.75	3.85	97.79	288.00	50.44
CV1000-6000-158	1.000	25.40	0.500	12.70	0.158 X 0.221	4.01 X 5.61	6.00	152.40	230.40	1024.87	5.10	129.54	4.20	106.68	256.00	44.83
CV1000-7000-158	1.000	25.40	0.500	12.70	0.158 X 0.221	4.01 X 5.61	7.00	177.80	235.20	1046.22	5.95	151.13	4.90	124.46	224.00	39.23
CV1000-8000-158	1.000	25.40	0.500	12.70	0.158 X 0.221	4.01 X 5.61	8.00	203.20	230.40	1024.87	6.80	172.72	5.60	142.24	192.00	33.62
CV1000-12000-158	1.000	25.40	0.500	12.70	0.158 X 0.221	4.01 X 5.61	12.00	304.80	230.40	1024.87	10.20	259.08	8.40	213.36	128.00	22.42
CV1000-1500-188	1.000	25.40	0.500	12.70	0.188 X 0.221	4.78 X 5.61	1.50	38.10	360.00	1601.36	1.28	32.39	1.13	28.70	1600.00	280.20
CV1000-2000-188	1.000	25.40	0.500	12.70	0.188 X 0.221	4.78 X 5.61	2.00	50.80	348.00	1547.98	1.70	43.18	1.50	38.10	1160.00	203.15
CV1000-2500-188	1.000	25.40	0.500	12.70	0.188 X 0.221	4.78 X 5.61	2.50	63.50	336.00	1494.60	2.13	53.98	1.88	47.75	896.00	156.91
CV1000-3000-188	1.000	25.40	0.500	12.70	0.188 X 0.221	4.78 X 5.61	3.00	76.20	331.20	1473.25	2.55	64.77	2.25	57.15	736.00	128.89
CV1000-3500-188	1.000	25.40	0.500	12.70	0.188 X 0.221	4.78 X 5.61	3.50	88.90	327.60	1457.24	2.98	75.57	2.63	66.80	624.00	109.28
CV1000-4000-188	1.000	25.40	0.500	12.70	0.188 X 0.221	4.78 X 5.61	4.00	101.60	331.20	1473.25	3.40	86.36	3.00	76.20	552.00	96.67
CV1000-4500-188	1.000	25.40	0.500	12.70	0.188 X 0.221	4.78 X 5.61	4.50	114.30	329.40	1465.24	3.83	97.16	3.38	85.85	488.00	85.46
CV1000-5000-188	1.000	25.40	0.500	12.70	0.188 X 0.221	4.78 X 5.61	5.00	127.00	324.00	1441.22	4.25	107.95	3.75	95.25	432.00	75.65
CV1000-6000-188	1.000	25.40	0.500	12.70	0.188 X 0.221	4.78 X 5.61	6.00	152.40	324.00	1441.22	5.10	129.54	4.50	114.30	360.00	63.05
CV1000-12000-188	1.000	25.40	0.500	12.70	0.188 X 0.221	4.78 X 5.61	12.00	304.80	316.80	1409.20	10.20	259.08	9.00	228.60	176.00	30.82

FOR INFORMATION ON ALTERNATIVE FINISHES, SEE PAGE 311

STOCK HEAVY DUTY COMPRESSION SPRINGS

Catalog #	Fits in Hole (H)		Fits over Shaft (R)		Wire Size		Free Length (L)		Load @ Load Length (P) Reference		Load Length (L_1)		Solid Height (Sh) Approx		Spring Rate +/-15%	
	in	mm	in	mm	in	mm	in	mm	lb	N	in	mm	in	mm	lb/in	N/mm
CV1250-1500-115	1.250	31.75	0.625	15.88	0.115 X 0.285	2.92 X 7.24	1.50	38.10	186.00	827.37	1.13	28.58	0.83	21.08	496.00	86.86
CV1250-1750-115	1.250	31.75	0.625	15.88	0.115 X 0.285	2.92 X 7.24	1.75	44.45	177.80	790.89	1.31	33.32	0.90	22.86	406.00	71.10
CV1250-2000-115	1.250	31.75	0.625	15.88	0.115 X 0.285	2.92 X 7.24	2.00	50.80	188.00	836.27	1.50	38.10	1.00	25.40	376.00	65.85
CV1250-2500-115	1.250	31.75	0.625	15.88	0.115 X 0.285	2.92 X 7.24	2.50	63.50	180.00	800.68	1.88	47.63	1.25	31.75	288.00	50.44
CV1250-3000-115	1.250	31.75	0.625	15.88	0.115 X 0.285	2.92 X 7.24	3.00	76.20	180.00	800.68	2.25	57.15	1.50	38.10	240.00	42.03
CV1250-3500-115	1.250	31.75	0.625	15.88	0.115 X 0.285	2.92 X 7.24	3.50	88.90	175.00	778.44	2.63	66.68	1.75	44.45	200.00	35.03
CV1250-4000-115	1.250	31.75	0.625	15.88	0.115 X 0.285	2.92 X 7.24	4.00	101.60	176.00	782.89	3.00	76.20	2.00	50.80	176.00	30.82
CV1250-4500-115	1.250	31.75	0.625	15.88	0.115 X 0.285	2.92 X 7.24	4.50	114.30	180.00	800.68	3.38	85.73	2.25	57.15	160.00	28.02
CV1250-5000-115	1.250	31.75	0.625	15.88	0.115 X 0.285	2.92 X 7.24	5.00	127.00	178.80	795.34	3.75	95.25	2.50	63.50	143.00	25.04
CV1250-5500-115	1.250	31.75	0.625	15.88	0.115 X 0.285	2.92 X 7.24	5.50	139.70	176.00	782.89	4.13	104.78	2.75	69.85	128.00	22.42
CV1250-6000-115	1.250	31.75	0.625	15.88	0.115 X 0.285	2.92 X 7.24	6.00	152.40	180.00	800.68	4.50	114.30	3.00	76.20	120.00	21.02
CV1250-7000-115	1.250	31.75	0.625	15.88	0.115 X 0.285	2.92 X 7.24	7.00	177.80	182.00	809.58	5.25	133.35	3.50	88.90	104.00	18.21
CV1250-8000-115	1.250	31.75	0.625	15.88	0.115 X 0.285	2.92 X 7.24	8.00	203.20	176.00	782.89	6.00	152.40	4.00	101.60	88.00	15.41
CV1250-10000-115	1.250	31.75	0.625	15.88	0.115 X 0.285	2.92 X 7.24	10.00	254.00	180.00	800.68	7.50	190.50	5.00	127.00	72.00	12.61
CV1250-12000-115	1.250	31.75	0.625	15.88	0.115 X 0.285	2.92 X 7.24	12.00	304.80	180.00	800.68	9.00	228.60	6.00	152.40	60.00	10.51
CV1250-1500-156	1.250	31.75	0.625	15.88	0.156 X 0.281	3.96 X 7.14	1.50	38.10	429.00	1908.29	1.13	28.58	0.98	24.89	1144.00	200.35
CV1250-1750-156	1.250	31.75	0.625	15.88	0.156 X 0.281	3.96 X 7.14	1.75	44.45	441.50	1963.89	1.31	33.32	1.10	27.94	1008.00	176.53
CV1250-2000-156	1.250	31.75	0.625	15.88	0.156 X 0.281	3.96 X 7.14	2.00	50.80	419.00	1863.80	1.50	38.10	1.26	32.00	838.00	146.76
CV1250-2500-156	1.250	31.75	0.625	15.88	0.156 X 0.281	3.96 X 7.14	2.50	63.50	390.00	1734.81	1.88	47.63	1.58	40.13	624.00	109.28
CV1250-3000-156	1.250	31.75	0.625	15.88	0.156 X 0.281	3.96 X 7.14	3.00	76.20	384.00	1708.12	2.25	57.15	1.89	48.01	512.00	89.66
CV1250-3500-156	1.250	31.75	0.625	15.88	0.156 X 0.281	3.96 X 7.14	3.50	88.90	385.00	1712.56	2.63	66.68	2.21	56.13	440.00	77.06
CV1250-4000-156	1.250	31.75	0.625	15.88	0.156 X 0.281	3.96 X 7.14	4.00	101.60	381.00	1694.77	3.00	76.20	2.52	64.01	381.00	66.72
CV1250-4500-156	1.250	31.75	0.625	15.88	0.156 X 0.281	3.96 X 7.14	4.50	114.30	370.10	1646.29	3.38	85.73	2.84	72.14	329.00	57.62
CV1250-5000-156	1.250	31.75	0.625	15.88	0.156 X 0.281	3.96 X 7.14	5.00	127.00	375.00	1668.08	3.75	95.25	3.15	80.01	300.00	52.54
CV1250-5500-156	1.250	31.75	0.625	15.88	0.156 X 0.281	3.96 X 7.14	5.50	139.70	363.00	1614.70	4.13	104.78	3.47	88.14	264.00	46.23
CV1250-6000-156	1.250	31.75	0.625	15.88	0.156 X 0.281	3.96 X 7.14	6.00	152.40	375.00	1668.08	4.50	114.30	3.78	96.01	250.00	43.78
CV1250-7000-156	1.250	31.75	0.625	15.88	0.156 X 0.281	3.96 X 7.14	7.00	177.80	367.50	1634.72	5.25	133.35	4.41	112.01	210.00	36.78
CV1250-8000-156	1.250	31.75	0.625	15.88	0.156 X 0.281	3.96 X 7.14	8.00	203.20	368.00	1636.94	6.00	152.40	5.04	128.02	184.00	32.22
CV1250-10000-156	1.250	31.75	0.625	15.88	0.156 X 0.281	3.96 X 7.14	10.00	254.00	362.50	1612.48	7.50	190.50	6.30	160.02	145.00	25.39
CV1250-12000-156	1.250	31.75	0.625	15.88	0.156 X 0.281	3.96 X 7.14	12.00	304.80	372.00	1654.74	9.00	228.60	7.56	192.02	124.00	21.72
CV1250-1500-200	1.250	31.75	0.625	15.88	0.2 X 0.286	5.08 X 7.26	1.50	38.10	495.00	2201.87	1.28	32.39	1.05	26.67	2200.00	385.28
CV1250-1750-200	1.250	31.75	0.625	15.88	0.2 X 0.286	5.08 X 7.26	1.75	44.45	477.60	2124.47	1.49	37.77	1.23	31.24	1816.00	318.03
CV1250-2000-200	1.250	31.75	0.625	15.88	0.2 X 0.286	5.08 X 7.26	2.00	50.80	448.80	1996.36	1.70	43.18	1.43	36.32	1496.00	261.99
CV1250-2500-200	1.250	31.75	0.625	15.88	0.2 X 0.286	5.08 X 7.26	2.50	63.50	441.00	1961.67	2.13	53.98	1.75	44.45	1176.00	205.95
CV1250-3000-200	1.250	31.75	0.625	15.88	0.2 X 0.286	5.08 X 7.26	3.00	76.20	428.40	1905.62	2.55	64.77	2.10	53.34	952.00	166.72
CV1250-3500-200	1.250	31.75	0.625	15.88	0.2 X 0.286	5.08 X 7.26	3.50	88.90	409.50	1821.55	2.98	75.57	2.45	62.23	780.00	136.60
CV1250-4000-200	1.250	31.75	0.625	15.88	0.2 X 0.286	5.08 X 7.26	4.00	101.60	398.40	1772.17	3.40	86.36	2.80	71.12	664.00	116.28
CV1250-4500-200	1.250	31.75	0.625	15.88	0.2 X 0.286	5.08 X 7.26	4.50	114.30	394.20	1753.49	3.83	97.16	3.15	80.01	584.00	102.27
CV1250-5000-200	1.250	31.75	0.625	15.88	0.2 X 0.286	5.08 X 7.26	5.00	127.00	397.50	1768.17	4.25	107.95	3.50	88.90	530.00	92.82
CV1250-5500-200	1.250	31.75	0.625	15.88	0.2 X 0.286	5.08 X 7.26	5.50	139.70	389.40	1732.14	4.68	118.75	3.85	97.79	472.00	82.66
CV1250-6000-200	1.250	31.75	0.625	15.88	0.2 X 0.286	5.08 X 7.26	6.00	152.40	405.00	1801.53	5.10	129.54	4.20	106.68	450.00	78.81
CV1250-7000-200	1.250	31.75	0.625	15.88	0.2 X 0.286	5.08 X 7.26	7.00	177.80	386.40	1718.79	5.95	151.13	4.90	124.46	368.00	64.45
CV1250-8000-200	1.250	31.75	0.625	15.88	0.2 X 0.286	5.08 X 7.26	8.00	203.20	393.60	1750.82	6.80	172.72	5.60	142.24	328.00	57.44
CV1250-10000-200	1.250	31.75	0.625	15.88	0.2 X 0.286	5.08 X 7.26	10.00	254.00	384.00	1708.12	8.50	215.90	7.00	177.80	256.00	44.83
CV1250-12000-200	1.250	31.75	0.625	15.88	0.2 X 0.286	5.08 X 7.26	12.00	304.80	396.00	1761.50	10.20	259.08	8.40	213.36	220.00	38.53
CV1250-2000-225	1.250	31.75	0.625	15.88	0.225 X 0.284	5.72 X 7.21	2.00	50.80	615.00	2735.66	1.70	43.18	1.50	38.10	2050.00	359.01
CV1250-2500-225	1.250	31.75	0.625	15.88	0.225 X 0.284	5.72 X 7.21	2.50	63.50	571.90	2543.94	2.13	53.98	1.88	47.75	1525.00	267.07
CV1250-3000-225	1.250	31.75	0.625	15.88	0.225 X 0.284	5.72 X 7.21	3.00	76.20	549.00	2442.07	2.55	64.77	2.25	57.15	1220.00	213.65
CV1250-3500-225	1.250	31.75	0.625	15.88	0.225 X 0.284	5.72 X 7.21	3.50	88.90	569.60	2533.71	2.98	75.57	2.63	66.80	1085.00	190.01
CV1250-4000-225	1.250	31.75	0.625	15.88	0.225 X 0.284	5.72 X 7.21	4.00	101.60	534.00	2375.35	3.40	86.36	3.00	76.20	890.00	155.86
CV1250-4500-225	1.250	31.75	0.625	15.88	0.225 X 0.284	5.72 X 7.21	4.50	114.30	563.60	2507.02	3.83	97.16	3.38	85.85	835.00	146.23
CV1250-5000-225	1.250	31.75	0.625	15.88	0.225 X 0.284	5.72 X 7.21	5.00	127.00	525.00	2335.32	4.25	107.95	3.75	95.25	700.00	122.59
CV1250-6000-225	1.250	31.75	0.625	15.88	0.225 X 0.284	5.72 X 7.21	6.00	152.40	517.50	2301.95	5.10	129.54	4.50	114.30	575.00	100.70
CV1250-8000-225	1.250	31.75	0.625	15.88	0.225 X 0.284	5.72 X 7.21	8.00	203.20	552.00	2455.42	6.80	172.72	6.00	152.40	460.00	80.56
CV1250-10000-225	1.250	31.75	0.625	15.88	0.225 X 0.284	5.72 X 7.21	10.00	254.00	517.20	2300.62	8.50	215.90	7.50	190.50	345.00	60.42
CV1250-12000-225	1.250	31.75	0.625	15.88	0.225 X 0.284	5.72 X 7.21	12.00	304.80	486.00	2161.83	10.20	259.08	9.00	228.60	270.00	47.28
CV1500-2000-135	1.500	38.10	0.750	19.05	0.135 X 0.345	3.43 X 8.76	2.00	50.80	265.00	1178.78	1.50	38.10	1.08	27.43	530.00	92.82
CV1500-2500-135	1.500	38.10	0.750	19.05	0.135 X 0.345	3.43 X 8.76	2.50	63.50	266.90	1187.23	1.88	47.63	1.25	31.75	427.00	74.78
CV1500-3000-135	1.500	38.10	0.750	19.05	0.135 X 0.345	3.43 X 8.76	3.00	76.20	270.00	1201.02	2.25	57.15	1.50	38.10	360.00	63.05
CV1500-3500-135	1.500	38.10	0.750	19.05	0.135 X 0.345	3.43 X 8.76	3.50	88.90	262.50	1167.66	2.63	66.68	1.75	44.45	300.00	52.54
CV1500-4000-135	1.500	38.10	0.750	19.05	0.135 X 0.345	3.43 X 8.76	4.00	101.60	249.00	1107.61	3.00	76.20	2.00	50.80	249.00	43.61
CV1500-4500-135	1.500	38.10	0.750	19.05	0.135 X 0.345	3.43 X 8.76	4.50	114.30	258.80	1151.20	3.38	85.73	2.25	57.15	230.00	40.28
CV1500-5000-135	1.500	38.10	0.750	19.05	0.135 X 0.345	3.43 X 8.76	5.00	127.00	262.50	1167.66	3.75	95.25	2.50	63.50	210.00	36.78
CV1500-5500-135	1.500	38.10	0.750	19.05	0.135 X 0.345	3.43 X 8.76	5.50	139.70	254.40	1131.63	4.13	104.78	2.75	69.85	185.00	32.40

STOCK HEAVY DUTY COMPRESSION SPRINGS

Catalog #	Fits in Hole (H)		Fits over Shaft (R)		Wire Size		Free Length (L)		Load @ Load Length (P) Reference		Load Length (L_1)		Solid Height (Sh) Approx		Spring Rate +/-15%	
	in	mm	in	mm	in	mm	in	mm	lb	N	in	mm	in	mm	lb/in	N/mm
CV1500-6000-135	1.500	38.10	0.750	19.05	0.135 X 0.345	3.43 X 8.76	6.00	152.40	255.00	1134.30	4.50	114.30	3.00	76.20	170.00	29.77
CV1500-7000-135	1.500	38.10	0.750	19.05	0.135 X 0.345	3.43 X 8.76	7.00	177.80	267.80	1191.23	5.25	133.35	3.50	88.90	153.00	26.79
CV1500-8000-135	1.500	38.10	0.750	19.05	0.135 X 0.345	3.43 X 8.76	8.00	203.20	264.00	1174.33	6.00	152.40	4.00	101.60	132.00	23.12
CV1500-10000-135	1.500	38.10	0.750	19.05	0.135 X 0.345	3.43 X 8.76	10.00	254.00	265.00	1178.78	7.50	190.50	5.00	127.00	106.00	18.56
CV1500-12000-135	1.500	38.10	0.750	19.05	0.135 X 0.345	3.43 X 8.76	12.00	304.80	255.00	1134.30	9.00	228.60	6.00	152.40	85.00	14.89
CV1500-2000-187	1.500	38.10	0.750	19.05	0.187 X 0.312	4.75 X 7.92	2.00	50.80	515.00	2290.83	1.50	38.10	1.26	32.00	1030.00	180.38
CV1500-2500-187	1.500	38.10	0.750	19.05	0.187 X 0.312	4.75 X 7.92	2.50	63.50	507.50	2257.47	1.88	47.63	1.58	40.13	812.00	142.20
CV1500-3000-187	1.500	38.10	0.750	19.05	0.187 X 0.312	4.75 X 7.92	3.00	76.20	468.00	2081.77	2.25	57.15	1.89	48.01	624.00	109.28
CV1500-3500-187	1.500	38.10	0.750	19.05	0.187 X 0.312	4.75 X 7.92	3.50	88.90	472.50	2101.78	2.63	66.68	2.21	56.13	540.00	94.57
CV1500-4000-187	1.500	38.10	0.750	19.05	0.187 X 0.312	4.75 X 7.92	4.00	101.60	465.00	2068.42	3.00	76.20	2.52	64.01	465.00	81.43
CV1500-4500-187	1.500	38.10	0.750	19.05	0.187 X 0.312	4.75 X 7.92	4.50	114.30	461.30	2051.96	3.38	85.73	2.84	72.14	410.00	71.80
CV1500-5000-187	1.500	38.10	0.750	19.05	0.187 X 0.312	4.75 X 7.92	5.00	127.00	460.00	2046.18	3.75	95.25	3.15	80.01	368.00	64.45
CV1500-5500-187	1.500	38.10	0.750	19.05	0.187 X 0.312	4.75 X 7.92	5.50	139.70	453.80	2018.60	4.13	104.78	3.47	88.14	330.00	57.79
CV1500-6000-187	1.500	38.10	0.750	19.05	0.187 X 0.312	4.75 X 7.92	6.00	152.40	442.50	1968.34	4.50	114.30	3.78	96.01	295.00	51.66
CV1500-7000-187	1.500	38.10	0.750	19.05	0.187 X 0.312	4.75 X 7.92	7.00	177.80	446.30	1985.24	5.25	133.35	4.41	112.01	255.00	44.66
CV1500-8000-187	1.500	38.10	0.750	19.05	0.187 X 0.312	4.75 X 7.92	8.00	203.20	440.00	1957.22	6.00	152.40	5.04	128.02	220.00	38.53
CV1500-10000-187	1.500	38.10	0.750	19.05	0.187 X 0.312	4.75 X 7.92	10.00	254.00	440.00	1957.22	7.50	190.50	6.30	160.02	176.00	30.82
CV1500-12000-187	1.500	38.10	0.750	19.05	0.187 X 0.312	4.75 X 7.92	12.00	304.80	432.00	1921.63	9.00	228.60	7.56	192.02	144.00	25.22
CV1500-2000-225	1.500	38.10	0.750	19.05	0.225 X 0.337	5.72 X 8.56	2.00	50.80	594.00	2642.24	1.70	43.18	1.40	35.56	1980.00	346.75
CV1500-2500-225	1.500	38.10	0.750	19.05	0.225 X 0.337	5.72 X 8.56	2.50	63.50	581.30	2585.75	2.13	53.98	1.75	44.45	1550.00	271.45
CV1500-3000-225	1.500	38.10	0.750	19.05	0.225 X 0.337	5.72 X 8.56	3.00	76.20	585.00	2602.21	2.55	64.77	2.10	53.34	1300.00	227.66
CV1500-3500-225	1.500	38.10	0.750	19.05	0.225 X 0.337	5.72 X 8.56	3.50	88.90	558.60	2484.78	2.98	75.57	2.45	62.23	1064.00	186.33
CV1500-4000-225	1.500	38.10	0.750	19.05	0.225 X 0.337	5.72 X 8.56	4.00	101.60	547.20	2434.07	3.40	86.36	2.80	71.12	912.00	159.72
CV1500-4500-225	1.500	38.10	0.750	19.05	0.225 X 0.337	5.72 X 8.56	4.50	114.30	550.80	2450.08	3.83	97.16	3.15	80.01	816.00	142.90
CV1500-5000-225	1.500	38.10	0.750	19.05	0.225 X 0.337	5.72 X 8.56	5.00	127.00	547.50	2435.40	4.25	107.95	3.50	88.90	730.00	127.84
CV1500-5500-225	1.500	38.10	0.750	19.05	0.225 X 0.337	5.72 X 8.56	5.50	139.70	552.80	2458.98	4.68	118.75	3.85	97.79	670.00	117.33
CV1500-6000-225	1.500	38.10	0.750	19.05	0.225 X 0.337	5.72 X 8.56	6.00	152.40	525.60	2337.98	5.10	129.54	4.20	106.68	584.00	102.27
CV1500-7000-225	1.500	38.10	0.750	19.05	0.225 X 0.337	5.72 X 8.56	7.00	177.80	520.80	2316.63	5.95	151.13	4.90	124.46	496.00	86.86
CV1500-8000-225	1.500	38.10	0.750	19.05	0.225 X 0.337	5.72 X 8.56	8.00	203.20	518.40	2305.96	6.80	172.72	5.60	142.24	432.00	75.65
CV1500-10000-225	1.500	38.10	0.750	19.05	0.225 X 0.337	5.72 X 8.56	10.00	254.00	543.00	2415.38	8.50	215.90	7.00	177.80	362.00	63.40
CV1500-12000-225	1.500	38.10	0.750	19.05	0.225 X 0.337	5.72 X 8.56	12.00	304.80	540.00	2402.04	10.20	259.08	8.40	213.36	300.00	52.54
CV1500-2000-300	1.500	38.10	0.750	19.05	0.3 X 0.346	7.62 X 8.79	2.00	50.80	1225.50	5451.29	1.70	43.18	1.55	39.37	4085.00	715.39
CV1500-2500-300	1.500	38.10	0.750	19.05	0.3 X 0.346	7.62 X 8.79	2.50	63.50	1231.90	5479.76	2.13	53.98	1.88	47.75	3285.00	575.29
CV1500-3000-300	1.500	38.10	0.750	19.05	0.3 X 0.346	7.62 X 8.79	3.00	76.20	1147.50	5104.33	2.55	64.77	2.25	57.15	2550.00	446.57
CV1500-3500-300	1.500	38.10	0.750	19.05	0.3 X 0.346	7.62 X 8.79	3.50	88.90	1120.90	4986.01	2.98	75.57	2.63	66.80	2135.00	373.90
CV1500-4000-300	1.500	38.10	0.750	19.05	0.3 X 0.346	7.62 X 8.79	4.00	101.60	1107.00	4924.18	3.40	86.36	3.00	76.20	1845.00	323.11
CV1500-4500-300	1.500	38.10	0.750	19.05	0.3 X 0.346	7.62 X 8.79	4.50	114.30	1096.90	4879.25	3.83	97.16	3.38	85.85	1625.00	284.58
CV1500-5000-300	1.500	38.10	0.750	19.05	0.3 X 0.346	7.62 X 8.79	5.00	127.00	1087.50	4837.44	4.25	107.95	3.75	95.25	1450.00	253.93
CV1500-6000-300	1.500	38.10	0.750	19.05	0.3 X 0.346	7.62 X 8.79	6.00	152.40	1084.50	4824.09	5.10	129.54	4.50	114.30	1205.00	211.03
CV1500-8000-300	1.500	38.10	0.750	19.05	0.3 X 0.346	7.62 X 8.79	8.00	203.20	1086.00	4830.77	6.80	172.72	6.00	152.40	905.00	158.49
CV1500-10000-300	1.500	38.10	0.750	19.05	0.3 X 0.346	7.62 X 8.79	10.00	254.00	1065.00	4737.35	8.50	215.90	7.50	190.50	710.00	124.34
CV1500-12000-300	1.500	38.10	0.750	19.05	0.3 X 0.346	7.62 X 8.79	12.00	304.80	999.00	4443.77	10.20	259.08	9.00	228.60	550.00	96.32
CV2000-2500-195	2.000	50.80	1.000	25.40	0.195 X 0.468	4.95 X 11.89	2.50	63.50	625.00	2780.14	1.88	47.63	1.40	35.56	1000.00	175.13
CV2000-3000-195	2.000	50.80	1.000	25.40	0.195 X 0.468	4.95 X 11.89	3.00	76.20	622.50	2769.02	2.25	57.15	1.60	40.64	830.00	145.36
CV2000-3500-195	2.000	50.80	1.000	25.40	0.195 X 0.468	4.95 X 11.89	3.50	88.90	592.40	2635.13	2.63	66.68	1.83	46.48	677.00	118.56
CV2000-4000-195	2.000	50.80	1.000	25.40	0.195 X 0.468	4.95 X 11.89	4.00	101.60	600.00	2668.93	3.00	76.20	2.05	52.07	600.00	105.08
CV2000-4500-195	2.000	50.80	1.000	25.40	0.195 X 0.468	4.95 X 11.89	4.50	114.30	596.30	2652.47	3.38	85.73	2.35	59.69	530.00	92.82
CV2000-5000-195	2.000	50.80	1.000	25.40	0.195 X 0.468	4.95 X 11.89	5.00	127.00	587.50	2613.33	3.75	95.25	2.55	64.77	470.00	82.31
CV2000-5500-195	2.000	50.80	1.000	25.40	0.195 X 0.468	4.95 X 11.89	5.50	139.70	556.90	2477.21	4.13	104.78	2.75	69.85	405.00	70.93
CV2000-6000-195	2.000	50.80	1.000	25.40	0.195 X 0.468	4.95 X 11.89	6.00	152.40	585.00	2602.21	4.50	114.30	3.00	76.20	390.00	68.30
CV2000-7000-195	2.000	50.80	1.000	25.40	0.195 X 0.468	4.95 X 11.89	7.00	177.80	546.00	2428.73	5.25	133.35	3.50	88.90	312.00	54.64
CV2000-8000-195	2.000	50.80	1.000	25.40	0.195 X 0.468	4.95 X 11.89	8.00	203.20	570.00	2535.49	6.00	152.40	4.00	101.60	285.00	49.91
CV2000-10000-195	2.000	50.80	1.000	25.40	0.195 X 0.468	4.95 X 11.89	10.00	254.00	540.00	2402.04	7.50	190.50	5.00	127.00	216.00	37.83
CV2000-12000-195	2.000	50.80	1.000	25.40	0.195 X 0.468	4.95 X 11.89	12.00	304.80	555.00	2468.76	9.00	228.60	6.00	152.40	185.00	32.40
CV2000-2500-225	2.000	50.80	1.000	25.40	0.225 X 0.437	5.72 X 11.1	2.50	63.50	740.00	3291.68	1.88	47.63	1.58	40.13	1184.00	207.35
CV2000-3000-225	2.000	50.80	1.000	25.40	0.225 X 0.437	5.72 X 11.1	3.00	76.20	697.50	3102.63	2.25	57.15	1.89	48.01	930.00	162.87
CV2000-3500-225	2.000	50.80	1.000	25.40	0.225 X 0.437	5.72 X 11.1	3.50	88.90	684.30	3043.92	2.63	66.68	2.21	56.13	782.00	136.95
CV2000-4000-225	2.000	50.80	1.000	25.40	0.225 X 0.437	5.72 X 11.1	4.00	101.60	664.00	2953.62	3.00	76.20	2.52	64.01	664.00	116.28
CV2000-4500-225	2.000	50.80	1.000	25.40	0.225 X 0.437	5.72 X 11.1	4.50	114.30	675.00	3002.55	3.38	85.73	2.84	72.14	600.00	105.08
CV2000-5000-225	2.000	50.80	1.000	25.40	0.225 X 0.437	5.72 X 11.1	5.00	127.00	667.50	2969.19	3.75	95.25	3.15	80.01	534.00	93.52
CV2000-5500-225	2.000	50.80	1.000	25.40	0.225 X 0.437	5.72 X 11.1	5.50	139.70	673.80	2997.21	4.13	104.78	3.47	88.14	490.00	85.81
CV2000-6000-225	2.000	50.80	1.000	25.40	0.225 X 0.437	5.72 X 11.1	6.00	152.40	675.00	3002.55	4.50	114.30	3.78	96.01	450.00	78.81
CV2000-7000-225	2.000	50.80	1.000	25.40	0.225 X 0.437	5.72 X 11.1	7.00	177.80	654.50	2911.36	5.25	133.35	4.41	112.01	374.00	65.50
CV2000-8000-225	2.000	50.80	1.000	25.40	0.225 X 0.437	5.72 X 11.1	8.00	203.20	660.00	2935.83	6.00	152.40	5.04	128.02	330.00	57.79

FOR INFORMATION ON ALTERNATIVE FINISHES, SEE PAGE 311

STOCK HEAVY DUTY COMPRESSION SPRINGS

Catalog #	Fits in Hole (H)		Fits over Shaft (R)		Wire Size		Free Length (L)		Load @ Load Length (P) Reference		Load Length (L_1)		Solid Height (Sh) Approx		Spring Rate +/-15%	
	in	mm	in	mm	in	mm	in	mm	lb	N	in	mm	in	mm	lb/in	N/mm
CV2000-10000-225	2.000	50.80	1.000	25.40	0.225 X 0.437	5.72 X 11.1	10.00	254.00	650.00	2891.34	7.50	190.50	6.30	160.02	260.00	45.53
CV2000-12000-225	2.000	50.80	1.000	25.40	0.225 X 0.437	5.72 X 11.1	12.00	304.80	645.00	2869.10	9.00	228.60	7.56	192.02	215.00	37.65
CV2000-2500-280	2.000	50.80	1.000	25.40	0.28 X 0.47	7.11 X 11.94	2.50	63.50	942.00	4190.22	2.13	53.98	1.75	44.45	2512.00	439.92
CV2000-3000-280	2.000	50.80	1.000	25.40	0.28 X 0.47	7.11 X 11.94	3.00	76.20	927.00	4123.50	2.55	64.77	2.10	53.34	2060.00	360.76
CV2000-3500-280	2.000	50.80	1.000	25.40	0.28 X 0.47	7.11 X 11.94	3.50	88.90	892.50	3970.04	2.98	75.57	2.45	62.23	1700.00	297.72
CV2000-4000-280	2.000	50.80	1.000	25.40	0.28 X 0.47	7.11 X 11.94	4.00	101.60	900.00	4003.40	3.40	86.36	2.80	71.12	1500.00	262.69
CV2000-4500-280	2.000	50.80	1.000	25.40	0.28 X 0.47	7.11 X 11.94	4.50	114.30	858.60	3819.24	3.83	97.16	3.15	80.01	1272.00	222.76
CV2000-5000-280	2.000	50.80	1.000	25.40	0.28 X 0.47	7.11 X 11.94	5.00	127.00	889.50	3956.69	4.25	107.95	3.50	88.90	1186.00	207.70
CV2000-5500-280	2.000	50.80	1.000	25.40	0.28 X 0.47	7.11 X 11.94	5.50	139.70	888.50	3952.24	4.68	118.75	3.85	97.79	1077.00	188.61
CV2000-6000-280	2.000	50.80	1.000	25.40	0.28 X 0.47	7.11 X 11.94	6.00	152.40	879.30	3911.32	5.10	129.54	4.20	106.68	977.00	171.10
CV2000-7000-280	2.000	50.80	1.000	25.40	0.28 X 0.47	7.11 X 11.94	7.00	177.80	861.00	3829.92	5.95	151.13	4.90	124.46	820.00	143.60
CV2000-8000-280	2.000	50.80	1.000	25.40	0.28 X 0.47	7.11 X 11.94	8.00	203.20	876.00	3896.64	6.80	172.72	5.60	142.24	730.00	127.84
CV2000-10000-280	2.000	50.80	1.000	25.40	0.28 X 0.47	7.11 X 11.94	10.00	254.00	858.00	3816.57	8.50	215.90	7.00	177.80	572.00	100.17
CV2000-12000-280	2.000	50.80	1.000	25.40	0.28 X 0.47	7.11 X 11.94	12.00	304.80	858.60	3819.24	10.20	259.08	8.40	213.36	477.00	83.54
CV2000-2500-365	2.000	50.80	1.000	25.40	0.365 X 0.46	9.27 X 11.68	2.50	63.50	1541.30	6856.04	2.13	53.98	1.90	48.26	4110.00	719.77
CV2000-3000-365	2.000	50.80	1.000	25.40	0.365 X 0.46	9.27 X 11.68	3.00	76.20	1435.50	6385.42	2.55	64.77	2.30	58.42	3190.00	558.65
CV2000-3500-365	2.000	50.80	1.000	25.40	0.365 X 0.46	9.27 X 11.68	3.50	88.90	1451.10	6454.81	2.98	75.57	2.63	66.80	2764.00	484.05
CV2000-4000-365	2.000	50.80	1.000	25.40	0.365 X 0.46	9.27 X 11.68	4.00	101.60	1386.60	6167.90	3.40	86.36	3.03	76.96	2311.00	404.72
CV2000-4500-365	2.000	50.80	1.000	25.40	0.365 X 0.46	9.27 X 11.68	4.50	114.30	1274.40	5668.81	3.83	97.16	3.38	85.85	1888.00	330.64
CV2000-5000-365	2.000	50.80	1.000	25.40	0.365 X 0.46	9.27 X 11.68	5.00	127.00	1353.00	6018.44	4.25	107.95	3.75	95.25	1804.00	315.93
CV2000-6000-365	2.000	50.80	1.000	25.40	0.365 X 0.46	9.27 X 11.68	6.00	152.40	1325.70	5897.01	5.10	129.54	4.50	114.30	1473.00	257.96
CV2000-8000-365	2.000	50.80	1.000	25.40	0.365 X 0.46	9.27 X 11.68	8.00	203.20	1339.20	5957.06	6.80	172.72	6.00	152.40	1116.00	195.44
CV2000-10000-365	2.000	50.80	1.000	25.40	0.365 X 0.46	9.27 X 11.68	10.00	254.00	1326.00	5898.34	8.50	215.90	7.50	190.50	884.00	154.81
CV2000-12000-365	2.000	50.80	1.000	25.40	0.365 X 0.46	9.27 X 11.68	12.00	304.80	1281.60	5700.84	10.20	259.08	9.00	228.60	712.00	124.69

CONICAL COMPRESSION SPRINGS

Stock sizes in stainless steel
SPEC conical springs are cone-shaped compression springs designed to provide a near constant spring rate and a solid height lower than a normal spring. Each spring features a variable pitch to achieve the constant spring rate and coils which nest during deflection to provide a solid height approximately equal to two wire diameters.

All springs are manufactured from stainless steel for use in a multitude of environments.

Material
Stainless Type 302 per ASTM A313 or AMS 5688 spring temper. (Chemical and physical only.)

Stainless steel springs are not recommended for applications where the temperature exceeds 500˚F (260˚C).

Certificate of chemical analysis available at additional charge.

Finish
Plain wire passivated. See page 311 for alternative finishes.

Direction of Helix
Right hand.

Ends
Squared ends, not ground.

Spring Rate
The spring rate is linear due to the variable pitch.

Coils
Springs are designed to permit active coils to nest within each other. This provides a solid height of approximately two wire diameters.

Solid Height
Due to coil nesting, the solid height is approximately equal to two wire diameters.

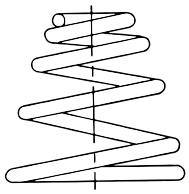
SIDE VIEW

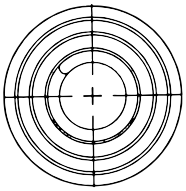
TOP VIEW

(OD) 0.360 - 0.600

CONICAL COMPRESSION SPRINGS

Catalog #	Outside Diameter Large End		Outside Diameter Small End		Wire Diameter		Free Height Approx		Load @ 50% of Free Length		Load @ Solid Approx		Spring Rate	
	in	mm	in	mm	in	mm	in	mm	lb	N	lb	N	lb/in	N/mm
A0360-029-0250-S*	0.360	9.14	0.125	3.18	0.029	0.74	0.250	6.35	3.450	15.35	5.29	23.53	27.58	4.83
A0420-029-0375-S*	0.420	10.67	0.156	3.96	0.029	0.74	0.375	9.53	2.500	11.12	4.23	18.82	13.35	2.34
A0420-029-0312-S*	0.420	10.67	0.187	4.75	0.029	0.74	0.312	7.92	2.260	10.05	3.68	16.37	14.48	2.54
A0420-029-0250-S*	0.420	10.67	0.218	5.54	0.029	0.74	0.250	6.35	2.040	9.07	3.14	13.97	16.38	2.87
A0420-032-0312-S*	0.420	10.67	0.156	3.96	0.032	0.81	0.312	7.92	3.630	16.15	5.77	25.67	23.25	4.07
A0420-032-0250-S*	0.420	10.67	0.187	4.75	0.032	0.81	0.250	6.35	3.190	14.19	4.74	21.08	25.49	4.46
A0420-035-0250-S*	0.420	10.67	0.187	4.75	0.035	0.89	0.250	6.35	5.090	22.64	7.33	32.61	40.80	7.15
A0480-029-0625-S*	0.480	12.19	0.187	4.75	0.029	0.74	0.625	15.88	2.150	9.56	3.90	17.35	6.88	1.2
A0480-029-0500-S*	0.480	12.19	0.218	5.54	0.029	0.74	0.500	12.7	1.930	8.59	3.40	15.12	7.70	1.35
A0480-029-0375-S*	0.480	12.19	0.25	6.35	0.029	0.74	0.375	9.53	1.590	7.07	2.70	12.01	8.50	1.49
A0480-029-0312-S*	0.480	12.19	0.281	7.14	0.029	0.74	0.312	7.92	1.530	6.81	2.49	11.08	9.79	1.71
A0480-032-0625-S*	0.480	12.19	0.156	3.96	0.032	0.81	0.625	15.88	3.420	15.21	6.13	27.27	10.93	1.91
A0480-032-0500-S*	0.480	12.19	0.187	4.75	0.032	0.81	0.500	12.7	2.880	12.81	5.02	22.33	11.51	2.02
A0480-032-0375-S*	0.480	12.19	0.218	5.54	0.032	0.81	0.375	9.53	2.560	11.39	4.24	18.86	13.63	2.39
A0480-032-0312-S*	0.480	12.19	0.25	6.35	0.032	0.81	0.312	7.92	2.370	10.54	3.78	16.81	15.21	2.66
A0480-035-0375-S*	0.480	12.19	0.187	4.75	0.035	0.89	0.375	9.53	3.920	17.44	6.37	28.34	20.91	3.66
A0480-035-0312-S*	0.480	12.19	0.218	5.54	0.035	0.89	0.312	7.92	3.480	15.48	5.39	23.98	22.26	3.9
A0480-038-0312-S*	0.480	12.19	0.187	4.75	0.038	0.97	0.312	7.92	5.020	22.33	7.60	33.81	32.13	5.63
A0480-038-0250-S*	0.480	12.19	0.218	5.54	0.038	0.97	0.250	6.35	4.750	21.13	6.61	29.4	38.02	6.66
A0600-026-1250-S*	0.600	15.24	0.312	7.92	0.026	0.66	1.250	31.75	1.000	4.45	1.92	8.54	1.61	0.28
A0600-026-1000-S*	0.600	15.24	0.343	8.71	0.026	0.66	1.000	25.4	0.840	3.74	1.58	7.03	1.67	0.29
A0600-026-0750-S*	0.600	15.24	0.375	9.53	0.026	0.66	0.750	19.05	0.730	3.25	1.36	6.05	1.94	0.34
A0600-029-1250-S*	0.600	15.24	0.25	6.35	0.029	0.74	1.250	31.75	1.560	6.94	2.97	13.21	2.49	0.44
A0600-029-1000-S*	0.600	15.24	0.281	7.14	0.029	0.74	1.000	25.4	1.390	6.18	2.61	11.61	2.77	0.49
A0600-029-0750-S*	0.600	15.24	0.343	8.71	0.029	0.74	0.750	19.05	1.180	5.25	2.19	9.74	3.16	0.55
A0600-029-0625-S*	0.600	15.24	0.375	9.53	0.029	0.74	0.625	15.88	1.120	4.98	2.03	9.03	3.57	0.63
A0600-032-0750-S*	0.600	15.24	0.281	7.14	0.032	0.81	0.750	19.05	1.800	8.01	3.30	14.68	4.81	0.84
A0600-032-0625-S*	0.600	15.24	0.343	8.71	0.032	0.81	0.625	15.88	1.640	7.3	2.95	13.12	5.25	0.92
A0600-032-0500-S*	0.600	15.24	0.375	9.53	0.032	0.81	0.500	12.7	1.530	6.81	2.67	11.88	6.13	1.07
A0600-035-0750-S*	0.600	15.24	0.218	5.54	0.035	0.89	0.750	19.05	2.720	12.1	4.93	21.93	7.25	1.27
A0600-035-0625-S*	0.600	15.24	0.281	7.14	0.035	0.89	0.625	15.88	2.410	10.72	4.28	19.04	7.70	1.35
A0600-035-0500-S*	0.600	15.24	0.312	7.92	0.035	0.89	0.500	12.7	2.160	9.61	3.72	16.55	8.64	1.51
A0600-038-0625-S*	0.600	15.24	0.25	6.35	0.038	0.97	0.625	15.88	3.570	15.88	6.27	27.89	11.42	2
A0600-038-0500-S*	0.600	15.24	0.281	7.14	0.038	0.97	0.500	12.7	3.220	14.32	5.45	24.24	12.88	2.26
A0600-038-0375-S*	0.600	15.24	0.312	7.92	0.038	0.97	0.375	9.53	2.620	11.65	4.18	18.59	13.99	2.45
A0600-040-0625-S*	0.600	15.24	0.218	5.54	0.04	1.02	0.625	15.88	4.560	20.28	7.95	35.36	14.59	2.56

FOR INFORMATION ON ALTERNATIVE FINISHES, SEE PAGE 311

Part Numbers with an "*" are squared and not ground.

CONICAL COMPRESSION SPRINGS

Catalog #	Outside Diameter Large End		Outside Diameter Small End		Wire Diameter		Free Height Approx		Load @ 50% of Free Length		Load @ Solid Approx		Spring Rate	
	in	mm	in	mm	in	mm	in	mm	lb	N	lb	N	lb/in	N/mm
A0600-040-0500-S*	0.600	15.24	0.25	6.35	0.04	1.02	0.500	12.7	4.070	18.1	6.83	30.38	16.28	2.85
A0600-040-0375-S*	0.600	15.24	0.312	7.92	0.04	1.02	0.375	9.53	3.560	15.84	5.61	24.95	18.98	3.32
A0600-042-0500-S*	0.600	15.24	0.218	5.54	0.042	1.07	0.500	12.7	5.130	22.82	8.53	37.94	20.49	3.59
A0600-042-0375-S*	0.600	15.24	0.281	7.14	0.042	1.07	0.375	9.53	4.350	19.35	6.75	30.03	23.19	4.06
A0600-045-0375-S*	0.600	15.24	0.25	6.35	0.045	1.14	0.375	9.53	6.090	27.09	9.25	41.15	32.49	5.69
A0720-035-1250-S*	0.720	18.29	0.343	8.71	0.035	0.89	1.250	31.75	2.040	9.07	3.86	17.17	3.27	0.57
A0720-035-1000-S*	0.720	18.29	0.375	9.53	0.035	0.89	1.000	25.4	1.800	8.01	3.34	14.86	3.59	0.63
A0720-035-0750-S*	0.720	18.29	0.438	11.13	0.035	0.89	0.750	19.05	1.620	7.21	2.94	13.08	4.33	0.76
A0720-038-1250-S*	0.720	18.29	0.281	7.14	0.038	0.97	1.250	31.75	2.990	13.3	5.61	24.95	4.78	0.84
A0720-038-1000-S*	0.720	18.29	0.343	8.71	0.038	0.97	1.000	25.4	2.640	11.74	4.88	21.71	5.29	0.93
A0720-038-0750-S*	0.720	18.29	0.375	9.53	0.038	0.97	0.750	19.05	2.190	9.74	3.94	17.53	5.84	1.02
A0720-038-0625-S*	0.720	18.29	0.438	11.13	0.038	0.97	0.625	15.88	2.100	9.34	3.69	16.41	6.72	1.18
A0720-040-1000-S*	0.720	18.29	0.281	7.14	0.04	1.02	1.000	25.4	3.310	14.72	6.08	27.05	6.61	1.16
A0720-040-0750-S*	0.720	18.29	0.343	8.71	0.04	1.02	0.750	19.05	2.760	12.28	4.92	21.89	7.35	1.29
A0720-040-0625-S*	0.720	18.29	0.375	9.53	0.04	1.02	0.625	15.88	2.450	10.9	4.27	18.99	7.84	1.37
A0720-040-0500-S*	0.720	18.29	0.438	11.13	0.04	1.02	0.500	12.7	2.370	10.54	3.98	17.7	9.47	1.66
A0720-042-1000-S*	0.720	18.29	0.281	7.14	0.042	1.07	1.000	25.4	4.190	18.64	7.67	34.12	8.37	1.47
A0720-042-0750-S*	0.720	18.29	0.343	8.71	0.042	1.07	0.750	19.05	3.440	15.3	6.11	27.18	9.17	1.61
A0720-042-0625-S*	0.720	18.29	0.375	9.53	0.042	1.07	0.625	15.88	3.250	14.46	5.62	25	10.39	1.82
A0720-045-0750-S*	0.720	18.29	0.281	7.14	0.045	1.14	0.750	19.05	4.830	21.48	8.49	37.77	12.87	2.25
A0720-045-0625-S*	0.720	18.29	0.343	8.71	0.045	1.14	0.625	15.88	4.350	19.35	7.44	33.09	13.91	2.44
A0720-045-0500-S*	0.720	18.29	0.375	9.53	0.045	1.14	0.500	12.7	3.890	17.3	6.37	28.34	15.55	2.72
A0720-049-0625-S*	0.720	18.29	0.281	7.14	0.049	1.24	0.625	15.88	6.460	28.74	10.90	48.49	20.67	3.62
A0720-049-0500-S*	0.720	18.29	0.343	8.71	0.049	1.24	0.500	12.7	5.730	25.49	9.21	40.97	22.92	4.01
A0720-049-0375-S*	0.720	18.29	0.375	9.53	0.049	1.24	0.375	9.53	4.840	21.53	7.15	31.8	25.82	4.52
A0720-055-0500-S*	0.720	18.29	0.281	7.14	0.055	1.4	0.500	12.7	10.120	45.02	15.78	70.19	40.50	7.09
A0720-055-0375-S*	0.720	18.29	0.312	7.92	0.055	1.4	0.375	9.53	8.340	37.1	11.78	52.4	44.49	7.79
A0850-042-1500-S*	0.850	21.59	0.343	8.71	0.042	1.07	1.500	38.1	3.080	13.7	5.82	25.89	4.11	0.72
A0850-042-1250-S*	0.850	21.59	0.375	9.53	0.042	1.07	1.250	31.75	2.700	12.01	5.04	22.42	4.32	0.76
A0850-042-1000-S*	0.850	21.59	0.438	11.13	0.042	1.07	1.000	25.4	2.350	10.45	4.31	19.17	4.71	0.82
A0850-042-0750-S*	0.850	21.59	0.56	14.22	0.042	1.07	0.750	19.05	2.360	10.5	4.19	18.64	6.28	1.1
A0850-045-1500-S*	0.850	21.59	0.343	8.71	0.045	1.14	1.500	38.1	4.190	18.64	7.88	35.05	5.59	0.98
A0850-045-1250-S*	0.850	21.59	0.375	9.53	0.045	1.14	1.250	31.75	3.750	16.68	6.96	30.96	6.00	1.05
A0850-045-1000-S*	0.850	21.59	0.438	11.13	0.045	1.14	1.000	25.4	3.280	14.59	5.97	26.56	6.56	1.15
A0850-045-0750-S*	0.850	21.59	0.5	12.7	0.045	1.14	0.750	19.05	3.000	13.34	5.27	23.44	7.99	1.4
A0850-049-1250-S*	0.850	21.59	0.312	7.92	0.049	1.24	1.250	31.75	5.680	25.27	10.47	46.57	9.09	1.59
A0850-049-0750-S*	0.850	21.59	0.438	11.13	0.049	1.24	0.750	19.05	4.260	18.95	7.40	32.92	11.35	1.99
A0850-049-0625-S*	0.850	21.59	0.5	12.7	0.049	1.24	0.625	15.88	4.040	17.97	6.82	30.34	12.93	2.26
A0850-055-1000-S*	0.850	21.59	0.281	7.14	0.055	1.4	1.000	25.4	8.500	37.81	15.14	67.35	17.01	2.98
A0850-055-0750-S*	0.850	21.59	0.343	8.71	0.055	1.4	0.750	19.05	7.180	31.94	12.25	54.49	19.14	3.35
A0850-055-0625-S*	0.850	21.59	0.438	11.13	0.055	1.4	0.625	15.88	6.580	29.27	10.84	48.22	21.05	3.69
A0850-059-0750-S*	0.850	21.59	0.312	7.92	0.059	1.5	0.750	19.05	10.000	44.48	16.85	74.95	26.67	4.67
A0850-059-0625-S*	0.850	21.59	0.375	9.53	0.059	1.5	0.625	15.88	8.860	39.41	14.37	63.92	28.36	4.97
A0850-063-0625-S*	0.850	21.59	0.312	7.92	0.063	1.6	0.625	15.88	12.220	54.36	19.51	86.78	39.07	6.84
A0850-063-0500-S*	0.850	21.59	0.375	9.53	0.063	1.6	0.500	12.7	11.090	49.33	16.60	73.84	44.33	7.76
A0850-067-0500-S*	0.850	21.59	0.375	9.53	0.067	1.7	0.500	12.7	14.850	66.06	21.74	96.7	59.45	10.41
A0975-049-1500-S*	0.975	24.77	0.438	11.13	0.049	1.24	1.500	38.1	3.880	17.26	7.26	32.29	5.18	0.91
A0975-049-1250-S*	0.975	24.77	0.5	12.7	0.049	1.24	1.250	31.75	3.560	15.84	6.56	29.18	5.69	1
A0975-049-1000-S*	0.975	24.77	0.56	14.22	0.049	1.24	1.000	25.4	3.290	14.63	5.93	26.38	6.58	1.15
A0975-049-0750-S*	0.975	24.77	0.625	15.88	0.049	1.24	0.750	19.05	2.930	13.03	5.09	22.64	7.81	1.37
A0975-055-1500-S*	0.975	24.77	0.375	9.53	0.055	1.4	1.500	38.1	6.880	30.6	12.76	56.76	9.18	1.61
A0975-055-1250-S*	0.975	24.77	0.438	11.13	0.055	1.4	1.250	31.75	6.090	27.09	11.10	49.38	9.74	1.71
A0975-055-1000-S*	0.975	24.77	0.5	12.7	0.055	1.4	1.000	25.4	5.400	24.02	9.61	42.75	10.79	1.89
A0975-055-0750-S*	0.975	24.77	0.56	14.22	0.055	1.4	0.750	19.05	4.830	21.48	8.24	36.65	12.87	2.25
A0975-059-1250-S*	0.975	24.77	0.343	8.71	0.059	1.5	1.250	31.75	8.470	37.68	15.34	68.24	13.55	2.37
A0975-059-1000-S*	0.975	24.77	0.438	11.13	0.059	1.5	1.000	25.4	7.400	32.92	13.06	58.09	14.81	2.59
A0975-059-0750-S*	0.975	24.77	0.5	12.7	0.059	1.5	0.750	19.05	6.440	28.65	10.85	48.26	17.18	3.01
A0975-063-1000-S*	0.975	24.77	0.343	8.71	0.063	1.6	1.000	25.4	10.020	44.57	17.51	77.89	20.03	3.51
A0975-063-0750-S*	0.975	24.77	0.438	11.13	0.063	1.6	0.750	19.05	8.590	38.21	14.29	63.57	22.92	4.01
A0975-067-0750-S*	0.975	24.77	0.375	9.53	0.067	1.7	0.750	19.05	11.440	50.89	18.78	83.54	30.51	5.34
A0975-067-0625-S*	0.975	24.77	0.438	11.13	0.067	1.7	0.625	15.88	10.270	45.68	16.14	71.79	32.85	5.75
A0975-072-0750-S*	0.975	24.77	0.375	9.53	0.072	1.83	0.750	19.05	16.110	71.66	26.03	115.79	42.98	7.53
A0975-072-0625-S*	0.975	24.77	0.438	11.13	0.072	1.83	0.625	15.88	14.850	66.06	22.85	101.64	47.49	8.32
A0975-074-0625-S*	0.975	24.77	0.438	11.13	0.074	1.88	0.625	15.88	16.850	74.95	25.71	114.36	53.94	9.45

Part Numbers with an "*" are squared and not ground.

MULTIWAVE COMPRESSION SPRINGS

Stock and custom sizes in stainless steel

Multiwave springs replace conventional round wire springs when space is critical; they will occupy only 1/3 to 1/2 of the compressed height space of a traditional round wire spring, while providing more deflection with the same load specifications.

SPEC Multiwave springs should be used for all applications requiring tight load deflection specifications where axial space is critical.

Material and Finish

Stainless steel commercial type 17-7 PH (slightly magnetic).
Maximum application temperature is 650˚F (340˚C).
Certificate of compliance available upon request.
Plain finish is standard. See page 311 for alternative finishes.

Unique manufacturing

A single filament of round-edged, pre-tempered flat wire is used to form the springs from a continuous coil. This results in uniform diameters and wave heights.

Design Comparison

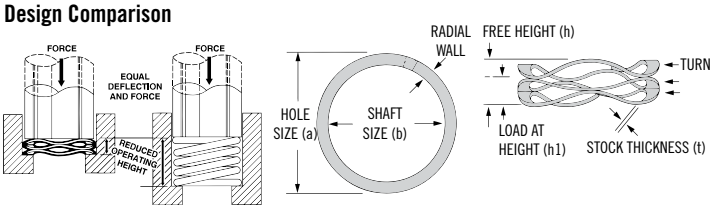

(OD) 0.375 - 0.875

MULTIWAVE COMPRESSION SPRINGS														
Catalog #	Fits in Hole Size (a)		Shaft (b)		Stock Thickness (t)		Free Height (h) Approx		Load Height (h1)		Nominal Load at Height		Spring Rate	
	in	mm	in	mm	in	mm	in	mm	in	mm	lb	N	lb/in	N/mm
MW0375-0150-04S	0.375	9.5	0.250	6.4	0.008	0.2	0.150	3.8	0.062	1.575	4	17.8	45	7.9
MW0375-0250-04S	0.375	9.5	0.250	6.4	0.008	0.2	0.250	6.4	0.108	2.743	4	17.8	28	4.9
MW0375-0350-04S	0.375	9.5	0.250	6.4	0.008	0.2	0.350	8.9	0.150	3.810	4	17.8	20	3.5
MW0375-0450-04S	0.375	9.5	0.250	6.4	0.008	0.2	0.450	11.4	0.195	4.953	4	17.8	16	2.8
MW0375-0150-07S	0.375	9.5	0.250	6.4	0.011	0.3	0.150	3.8	0.081	2.057	7	31.1	101	17.7
MW0375-0250-07S	0.375	9.5	0.250	6.4	0.011	0.3	0.250	6.4	0.145	3.683	7	31.1	67	11.7
MW0375-0350-07S	0.375	9.5	0.250	6.4	0.011	0.3	0.350	8.9	0.202	5.131	7	31.1	47	8.2
MW0375-0450-07S	0.375	9.5	0.250	6.4	0.011	0.3	0.450	11.4	0.262	6.655	7	31.1	37	6.5
MW0437-0165-04S	0.437	11.1	0.281	7.1	0.008	0.2	0.165	4.2	0.063	1.600	4	17.8	39	6.8
MW0437-0275-04S	0.437	11.1	0.281	7.1	0.008	0.2	0.275	7	0.109	2.769	4	17.8	24	4.2
MW0437-0385-04S	0.437	11.1	0.281	7.1	0.008	0.2	0.385	9.8	0.160	4.064	4	17.8	18	3.2
MW0437-0165-08S	0.437	11.1	0.281	7.1	0.011	0.3	0.165	4.2	0.082	2.083	8	35.6	96	16.8
MW0437-0275-08S	0.437	11.1	0.281	7.1	0.011	0.3	0.275	7	0.142	3.607	8	35.6	60	10.5
MW0437-0385-08S	0.437	11.1	0.281	7.1	0.011	0.3	0.385	9.8	0.198	5.029	8	35.6	43	7.5
MW0500-0180-05S	0.500	12.7	0.312	7.9	0.008	0.2	0.180	4.6	0.062	1.575	5	22.2	42	7.4
MW0500-0300-05S	0.500	12.7	0.312	7.9	0.008	0.2	0.300	7.6	0.107	2.718	5	22.2	26	4.6
MW0500-0420-05S	0.500	12.7	0.312	7.9	0.008	0.2	0.420	10.7	0.150	3.810	5	22.2	19	3.3
MW0500-0180-10S	0.500	12.7	0.312	7.9	0.010	0.3	0.180	4.6	0.065	1.651	10	44.5	87	15.2
MW0500-0300-10S	0.500	12.7	0.312	7.9	0.010	0.3	0.300	7.6	0.114	2.896	10	44.5	54	9.5
MW0500-0420-10S	0.500	12.7	0.312	7.9	0.010	0.3	0.420	10.7	0.162	4.115	10	44.5	39	6.8
MW0562-0195-05S	0.562	14.3	0.375	9.5	0.009	0.2	0.195	5	0.080	2.032	5	22.2	43	7.5
MW0562-0325-05S	0.562	14.3	0.375	9.5	0.009	0.2	0.325	8.3	0.135	3.429	5	22.2	26	4.6
MW0562-0455-05S	0.562	14.3	0.375	9.5	0.009	0.2	0.455	11.6	0.190	4.826	5	22.2	19	3.3
MW0562-0195-11S	0.562	14.3	0.375	9.5	0.012	0.3	0.195	5	0.086	2.184	11	48.9	101	17.7
MW0562-0325-11S	0.562	14.3	0.375	9.5	0.012	0.3	0.325	8.3	0.145	3.683	11	48.9	61	10.7
MW0562-0455-11S	0.562	14.3	0.375	9.5	0.012	0.3	0.455	11.6	0.209	5.309	11	48.9	45	7.9
MW0625-0180-06S	0.625	15.9	0.450	11.4	0.010	0.3	0.180	4.6	0.055	1.397	6	26.7	48	8.4
MW0625-0300-06S	0.625	15.9	0.450	11.4	0.010	0.3	0.300	7.6	0.085	2.159	6	26.7	28	4.9
MW0625-0420-06S	0.625	15.9	0.450	11.4	0.010	0.3	0.420	10.7	0.128	3.251	6	26.7	21	3.7
MW0625-0780-06S	0.625	15.9	0.450	11.4	0.010	0.3	0.780	19.8	0.238	6.045	6	26.7	11	1.9
MW0625-0180-12S	0.625	15.9	0.450	11.4	0.010	0.3	0.180	4.6	0.104	2.642	12	53.4	158	27.7
MW0625-0300-12S	0.625	15.9	0.450	11.4	0.010	0.3	0.300	7.6	0.175	4.445	12	53.4	96	16.8
MW0625-0420-12S	0.625	15.9	0.450	11.4	0.010	0.3	0.420	10.7	0.246	6.248	12	53.4	69	12.1
MW0625-0780-12S	0.625	15.9	0.450	11.4	0.010	0.3	0.780	19.8	0.454	11.532	12	53.4	37	6.5
MW0750-0250-07S	0.750	19.1	0.550	14	0.008	0.2	0.250	6.4	0.142	3.607	8	34.3	65	11.4
MW0750-0417-07S	0.750	19.1	0.550	14	0.008	0.2	0.417	10.6	0.246	6.248	8	34.3	41	7.2
MW0750-0250-13S	0.750	19.1	0.550	14	0.010	0.3	0.250	6.4	0.159	4.039	13	57.8	143	25.0
MW0750-0417-13S	0.750	19.1	0.550	14	0.010	0.3	0.417	10.6	0.270	6.858	13	57.8	88	15.4
MW0750-0250-22S	0.750	19.1	0.550	14	0.013	0.3	0.250	6.4	0.169	4.293	22	97.9	272	47.6
MW0750-0417-22S	0.750	19.1	0.550	14	0.013	0.3	0.417	10.6	0.291	7.391	22	97.9	175	30.6
MW0875-0250-12S	0.875	22.2	0.600	15.2	0.010	0.3	0.250	6.4	0.117	2.972	12	53.4	90	15.8
MW0875-0417-12S	0.875	22.2	0.600	15.2	0.010	0.3	0.417	10.6	0.207	5.258	12	53.4	57	10.0
MW0875-0250-18S	0.875	22.2	0.600	15.2	0.012	0.3	0.250	6.4	0.124	3.150	18	80.1	143	25.0
MW0875-0417-18S	0.875	22.2	0.600	15.2	0.012	0.3	0.417	10.6	0.214	5.436	18	80.1	89	15.6
MW0875-0250-25S	0.875	22.2	0.600	15.2	0.015	0.4	0.250	6.4	0.166	4.216	25	111.2	298	52.2
MW0875-0417-25S	0.875	22.2	0.600	15.2	0.015	0.4	0.417	10.6	0.278	7.061	25	111.2	180	31.5

FOR INFORMATION ON ALTERNATIVE FINISHES, SEE PAGE 311

MULTIWAVE COMPRESSION SPRINGS

Catalog #	Fits in Hole Size (a)		Shaft (b)		Stock Thickness (t)		Free Height (h) Approx		Load Height (h1)		Nominal Load at Height		Spring Rate	
	in	mm	in	mm	in	mm	in	mm	in	mm	lb	N	lb/in	N/mm
MW0875-0583-25S	0.875	22.2	0.600	15.2	0.015	0.4	0.583	14.8	0.395	10.033	25	111.2	133	23.3
MW1000-0250-12S	1.000	25.4	0.730	18.5	0.010	0.3	0.250	6.4	0.084	2.134	12	53.4	72	12.6
MW1000-0417-12S	1.000	25.4	0.730	18.5	0.010	0.3	0.417	10.6	0.145	3.683	12	53.4	44	7.7
MW1000-0583-12S	1.000	25.4	0.730	18.5	0.010	0.3	0.583	14.8	0.201	5.105	12	53.4	31	5.4
MW1000-0250-18S	1.000	25.4	0.730	18.5	0.012	0.3	0.250	6.4	0.087	2.210	18	80.1	110	19.3
MW1000-0417-18S	1.000	25.4	0.730	18.5	0.012	0.3	0.417	10.6	0.148	3.759	18	80.1	67	11.7
MW1000-0583-18S	1.000	25.4	0.730	18.5	0.012	0.3	0.583	14.8	0.212	5.385	18	80.1	49	8.6
MW1000-0250-25S	1.000	25.4	0.730	18.5	0.015	0.4	0.250	6.4	0.131	3.327	25	111.2	210	36.8
MW1000-0417-25S	1.000	25.4	0.730	18.5	0.015	0.4	0.417	10.6	0.227	5.766	25	111.2	132	23.1
MW1000-0583-25S	1.000	25.4	0.730	18.5	0.015	0.4	0.583	14.8	0.319	8.103	25	111.2	95	16.6
MW1125-0300-12S	1.125	28.6	0.850	21.6	0.012	0.3	0.300	7.6	0.146	3.708	12	53.4	78	13.7
MW1125-0500-12S	1.125	28.6	0.850	21.6	0.012	0.3	0.500	12.7	0.250	6.350	12	53.4	48	8.4
MW1125-0700-12S	1.125	28.6	0.850	21.6	0.012	0.3	0.700	17.8	0.344	8.738	12	53.4	34	6.0
MW1125-0300-20S	1.125	28.6	0.850	21.6	0.015	0.4	0.300	7.6	0.160	4.064	20	89.0	143	25.0
MW1125-0500-20S	1.125	28.6	0.850	21.6	0.015	0.4	0.500	12.7	0.270	6.858	20	89.0	87	15.2
MW1125-0700-20S	1.125	28.6	0.850	21.6	0.015	0.4	0.700	17.8	0.381	9.677	20	89.0	63	11.0
MW1125-0300-30S	1.125	28.6	0.850	21.6	0.018	0.5	0.300	7.6	0.178	4.521	30	133.4	246	43.1
MW1125-0500-30S	1.125	28.6	0.850	21.6	0.018	0.5	0.500	12.7	0.303	7.696	30	133.4	152	26.6
MW1125-0700-30S	1.125	28.6	0.850	21.6	0.018	0.5	0.700	17.8	0.421	10.693	30	133.4	108	18.9
MW1250-0300-12S	1.250	31.8	1.000	25.4	0.012	0.3	0.300	7.6	0.084	2.134	12	53.4	56	9.8
MW1250-0500-12S	1.250	31.8	1.000	25.4	0.012	0.3	0.500	12.7	0.149	3.785	12	53.4	34	6.0
MW1250-0700-12S	1.250	31.8	1.000	25.4	0.012	0.3	0.700	17.8	0.207	5.258	12	53.4	24	4.2
MW1250-0300-20S	1.250	31.8	1.000	25.4	0.015	0.4	0.300	7.6	0.124	3.150	20	89.0	114	20.0
MW1250-0500-20S	1.250	31.8	1.000	25.4	0.015	0.4	0.500	12.7	0.215	5.461	20	89.0	70	12.3
MW1250-0700-20S	1.250	31.8	1.000	25.4	0.015	0.4	0.700	17.8	0.303	7.696	20	89.0	50	8.8
MW1250-0300-30S	1.250	31.8	1.000	25.4	0.019	0.5	0.300	7.6	0.158	4.013	30	133.4	210	36.8
MW1250-0500-30S	1.250	31.8	1.000	25.4	0.019	0.5	0.500	12.7	0.272	6.909	30	133.4	132	23.1
MW1250-0700-30S	1.250	31.8	1.000	25.4	0.019	0.5	0.700	17.8	0.384	9.754	30	133.4	95	16.6
MW1375-0300-15S	1.375	34.9	1.030	26.2	0.012	0.3	0.300	7.6	0.075	1.905	15	66.7	67	11.7
MW1375-0500-15S	1.375	34.9	1.030	26.2	0.012	0.3	0.500	12.7	0.129	3.277	15	66.7	40	7.0
MW1375-0700-15S	1.375	34.9	1.030	26.2	0.012	0.3	0.700	17.8	0.179	4.547	15	66.7	29	5.1
MW1375-0300-25S	1.375	34.9	1.030	26.2	0.016	0.4	0.300	7.6	0.142	3.607	25	111.2	158	27.7
MW1375-0500-25S	1.375	34.9	1.030	26.2	0.016	0.4	0.500	12.7	0.240	6.096	25	111.2	96	16.8
MW1375-0700-25S	1.375	34.9	1.030	26.2	0.016	0.4	0.700	17.8	0.340	8.636	25	111.2	69	12.1
MW1375-0300-35S	1.375	34.9	1.030	26.2	0.018	0.5	0.300	7.6	0.149	3.785	35	155.7	232	40.6
MW1375-0500-35S	1.375	34.9	1.030	26.2	0.018	0.5	0.500	12.7	0.247	6.274	35	155.7	138	24.2
MW1375-0700-35S	1.375	34.9	1.030	26.2	0.018	0.5	0.700	17.8	0.343	8.712	35	155.7	98	17.2
MW1500-0300-20S	1.500	38.1	1.140	29	0.016	0.4	0.300	7.6	0.129	3.277	20	89.0	117	20.5
MW1500-0500-20S	1.500	38.1	1.140	29	0.016	0.4	0.500	12.7	0.213	5.410	20	89.0	70	12.3
MW1500-0700-20S	1.500	38.1	1.140	29	0.016	0.4	0.700	17.8	0.301	7.645	20	89.0	50	8.8
MW1500-0300-35S	1.500	38.1	1.140	29	0.018	0.5	0.300	7.6	0.122	3.099	35	155.7	197	34.5
MW1500-0500-35S	1.500	38.1	1.140	29	0.018	0.5	0.500	12.7	0.206	5.232	35	155.7	119	20.8
MW1500-0700-35S	1.500	38.1	1.140	29	0.018	0.5	0.700	17.8	0.291	7.391	35	155.7	86	15.1
MW1500-0300-60S	1.500	38.1	1.140	29	0.018	0.5	0.300	7.6	0.166	4.216	60	266.9	448	78.5
MW1500-0500-60S	1.500	38.1	1.140	29	0.018	0.5	0.500	12.7	0.278	7.061	60	266.9	270	47.3
MW1500-0700-60S	1.500	38.1	1.140	29	0.018	0.5	0.700	17.8	0.390	9.906	60	266.9	194	34.0
MW1750-0375-25S	1.750	44.5	1.340	34	0.018	0.5	0.375	9.5	0.155	3.937	25	111.2	114	20.0
MW1750-0625-25S	1.750	44.5	1.340	34	0.018	0.5	0.625	15.9	0.265	6.731	25	111.2	69	12.1
MW1750-0870-25S	1.750	44.5	1.340	34	0.018	0.5	0.870	22.1	0.367	9.322	25	111.2	50	8.8
MW1750-0375-50S	1.750	44.5	1.340	34	0.018	0.5	0.375	9.5	0.188	4.775	50	222.4	267	46.8
MW1750-0625-50S	1.750	44.5	1.340	34	0.018	0.5	0.625	15.9	0.315	8.001	50	222.4	161	28.2
MW1750-0870-50S	1.750	44.5	1.340	34	0.018	0.5	0.870	22.1	0.452	11.481	50	222.4	120	21.0
MW1750-0375-90S	1.750	44.5	1.340	34	0.024	0.6	0.375	9.5	0.232	5.893	90	400.3	629	110.2
MW1750-0625-90S	1.750	44.5	1.340	34	0.024	0.6	0.625	15.9	0.409	10.389	90	400.3	417	73.0
MW1750-0870-90S	1.750	44.5	1.340	34	0.024	0.6	0.870	22.1	0.577	14.656	90	400.3	307	53.8
MW2000-0375-25S	2.000	50.8	1.600	40.6	0.018	0.5	0.375	9.5	0.094	2.388	25	111.2	89	15.6
MW2000-0625-25S	2.000	50.8	1.600	40.6	0.018	0.5	0.625	15.9	0.158	4.013	25	111.2	54	9.5
MW2000-0870-25S	2.000	50.8	1.600	40.6	0.018	0.5	0.870	22.1	0.217	5.512	25	111.2	38	6.7
MW2000-0375-50S	2.000	50.8	1.600	40.6	0.018	0.5	0.375	9.5	0.140	3.556	50	222.4	213	37.3
MW2000-0625-50S	2.000	50.8	1.600	40.6	0.018	0.5	0.625	15.9	0.245	6.223	50	222.4	132	23.1
MW2000-0870-50S	2.000	50.8	1.600	40.6	0.018	0.5	0.870	22.1	0.345	8.763	50	222.4	95	16.6
MW2000-0375-90S	2.000	50.8	1.600	40.6	0.024	0.6	0.375	9.5	0.197	5.004	90	400.3	506	88.6
MW2000-0625-90S	2.000	50.8	1.600	40.6	0.024	0.6	0.625	15.9	0.332	8.433	90	400.3	307	53.8
MW2000-0870-90S	2.000	50.8	1.600	40.6	0.024	0.6	0.870	22.1	0.465	11.811	90	400.3	222	38.9

ALTERNATIVE FINISHES

Associated Spring RAYMOND - SPEC has the largest line of high-quality, precision-engineered stock springs and washers on the market today. They are all immediately available per the specifications indicated in these catalog pages. But our commitment to you does not stop here. We recognize that your application might include a special plating or even a secondary color coating – all available from Associated Spring RAYMOND - SPEC as well. We offer a variety of specific processes and treatments that we have summarized in the following tables.

FINISH	SUB-FINISH	CODE	NOTES
Electrodeposited Zinc	As Plated	01	Not recommended for: Heavy Duty Compression Springs, Belleville Spring Washers, Metric Disc Springs, Curved Spring Washers, Larger Wave Spring Washers (W3118-035 & up), MultiWave or Finger Washers
	w/ Clear Chromate	02	
	w/ Yellow Chromate	03	
Electrodeposited Cad	As Plated	04	
	w/ Clear Chromate	05	
	w/ Yellow Chromate	06	
Electrodeposited Nickel	As Plated	07	
Electroless Nickel	As Plated	08	
Electrodeposited Tin	As Plated	09	
Electrodeposited Zinc-Nickel	w/ Clear Chromate	10	
	w/ Yellow Chromate	11	
Mechanical Zinc	As Plated	12	Not recommended for: MultiWave or Finger Washers
	w/ Clear Chromate	13	
	w/ Yellow Chromate	14	
Mechanical Tin	As Plated	15	
	w/ Yellow Chromate	16	
Mechanical Zinc-Nickel	As Plated	17	
Vacuum Cad	As Plated	18	
	w/ Yellow Chromate	19	
Zinc Phosphate and Oil	As Plated	20	Not recommended for: Belleville Spring Washers, Metric Disc Springs, Curved Spring Washers, and Stainless MultiWave or Finger Washers
Black Oxide and Oil	As Plated	21	
Passivation		23	Not recommended for: Carbon Steel Parts (of all types), and MultiWave or Finger Washers
Thermadep® Paint		26	Not recommended for: Continuous length extension springs, Fasteners
Painted Finish for Color Coating		27	
Electrodeposited Cadmium Plate	(QQ-P-416)	28	Not recommended for: Heavy Duty Compression Springs, Belleville Spring Washers, Metric Disc Springs, Curved Spring Washers, Larger Wave Spring Washers (W3118-035 & up), MultiWave or Finger Washers
	With Yellow Chromate, supplementary Coating (QQ-P-416)	29	
Tacky Board		30	Not recommended for: Heavy Duty Compression Springs, Continuous Springs, and Fasteners
RoHs Electrodeposited Zinc Plate	As Plated	31	Not recommended for: Heavy Duty Compression Springs, Belleville Spring Washers, Metric Disc Springs, Curved Spring Washers, Larger Wave Spring Washers (W3118-035 & up), MultiWave or Finger Washers
	With Clear Chromate Supplementary Coating	32	
	With Yellow Chromate Supplementary Coating	33	
RoHs Electrodeposited Nickel	As Plated	34	
RoHs Passivation		35	Not recommended for: Steel Parts (of all types)
Dip and Spin Painting		36	
Passivation	ASTM A967-Citric	37	Not recommended for: Steel Parts (of all types)
RoHs Mechanical Zinc Plate	With Yellow Chromate Supplementary Coating	38	Not recommended for: Heavy Duty Compression Springs, MultiWave or Finger Washers
Geomet® 240	ASTM F1136 Grade 2 (NC)	39	240 hour salt spray; not recommended for: MultiWave or Finger Washers
RoHs Mechanical Zinc Plate	With Clear Chromate Supplementary Coating	40	Not recommended for: Heavy Duty Compression Springs, MultiWave or Finger Washers
Temperature Indicating Coating		41	Not recommended for: MultiWave Washers, and Retaining Rings
NADCAP Certified Passivation	AMS QQ-P-35	43	Not recommended for: Carbon Steel Parts (of all types), and MultiWave or Finger Washers
Geomet® 500	ASTM F1136 Grade 4 (NC)	44	500 hour salt spray; not recommended for MultiWave or Finger Washers
Geomet® 720	ASTM F1136 Grade 3 (NC)	45	720 hour salt spray; not recommended for MultiWave or Finger Washers

SPECIAL SPRINGS

Company:	
Address:	
City:	
State:	
Attn:	
Phone:	Fax:
Email:	

In Office Use Only
Date Received:
Date Quoted:
Quoted By:

Compression

Quantity Required
Wire Size
Type of Wire
Outside Diameter
Inside Diameter
Free Length
Hole Size
Rod Size
No. of Coils
Pitch
Rate
Solid Height
Direction of Coils
Type of Ends
Test Loads
Print Available?
Finish
Comments

Extension

Quantity Required
Wire Size
Type of Wire
Outside Diameter
Inside Diameter
Free Length
Initial Tension
No. of Coils
Pitch
Rate
Maximum Extension
Direction of Coils
Type of Loops
Test Loads
Print Available?
Finish
Comments

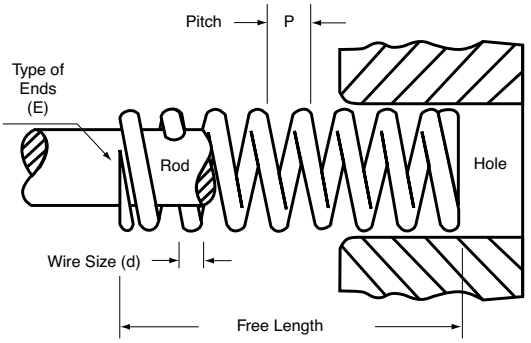

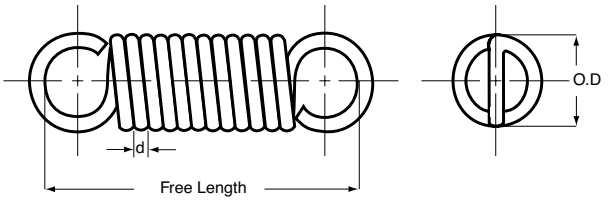

CUSTOM-ENGINEERED PARTS AND SPECIAL ORDERS

If you are looking for a special spring, spring washer, assembly or engineered component and cannot find it in this catalog, let us know, and we will design it for you, to your specifications. Our unique technical capabilities and resources allow us to provide custom-engineered parts and components to a multitude of industries and applications, ranging from aerospace to medical devices to food service.

Your special order is very important to us: When you deal with Associated Spring RAYMOND, you can be certain that we will assist you with high quality custom-engineered parts, from design right into production – at the right price and to your delivery requirements.

Give us a call at (800) 872-7732, and let our expertise work for you.

Below is a snapshot of our various capabilities:

Compression Springs
- Resists applied push forces
- Cylindrical, conical, and barrel-shaped
- Wire diameter: .004" to 3"
- Typical applications include transportation and medical equipment

Extension Springs
- Resists applied pull forces
- Various end types available
- Wire diameter: .004" to .625"
- Typical applications include dental furniture, attic door hatches, and playground equipment

Torsion Springs
- Resists applied torque
- Single or double wound
- Open or closed wound
- Various end types available
- Wire diameter: .005" to .625"
- Typical applications include truck doors, ATM machines and printers

Die Springs
- Resists applied compression forces
- Hole diameter: .375" to 4"
- Wire shapes: D, Square, Round, Rectangular
- Typical applications include stamping and molding dies

Constant Force Springs
- Used as counterbalance
- Inside diameter mounted on drum – self-contained outer diameter
- Typical applications include window shades and display racks

Power Springs
- Resists applied torque
- Contained by arbor and case
- Coils contact each other
- Typical applications include motors and retractor mechanisms

Spiral Torsion Springs
- Resists applied torque
- Self contained
- Coils do not contact each other
- Typical applications include motors and timing mechanisms

Garter Springs
- Garter springs are extension springs with ends connected
- Exerts radial forces
- Outside coil diameter: .039" to .250"
- Wire diameter: .006" to .034"
- Primary application is oil seals

Belleville Washers
- High forces in small deflections
- Also known as conical or disc washers
- OD up to 24"
- Linear and non-linear force/deflection curves
- Made to fit specified rod and/or hole fit
- Assembled in parallel or series to modify force and deflection
- Typical applications include stamping dies and clutches

Curved Washers
- Exert light thrust loads
- Made to fit specified rod and/or hole fit
- Often used to absorb axial end play

Wave Washers
- Exert moderate thrust loads
- Made to fit specified rod and/or hole fit
- Often used for bearing preload

Wire Forms
- Non-traditional force applications
- Wire diameter: .004" to .625"
- Typical applications include nozzles and clamps

Stampings
- Per customer specification
- Material thickness: .010" to .375"

Materials
- Carbon steels: Music wire, hard drawn, oil tempered
- Pre plated music wire: Tin and Zinc
- Alloy steels: Chrome silicon – commercial and valve quality
- Stainless Steels: 302, 316, 17-7
- Exotic: Inconel® 600, 718, and X750, Hastelloy®, Beryllium Copper, titanium, etc……
- Round, rectangular, and square wire available

Special Processing
- Passivation
- Zinc, cadmium, nickel, tin plating and black oxide
- Dacroseal, Geomet®, Dip and Spin
- Enamel, epoxy and temperature-indicator paint
- Shot peening
- Liquid penetrant and magnetic particle inspection
- Special packaging available (including tacky board)
- Mechanical Zinc Plate*

* Standard finish for high carbon steel is plain finish. Stainless steel is supplied in plain finish. On special order, high carbon steel washers may be mechanically plated, a process which substantially reduces the possibility of hydrogen embrittlement. Recommendations for specific applications will be made on request. See page 311 for alternative finishes.

NOTES

NOTES

NOTES

NOTES

NOTES

NOTES

NOTES

NOTES

NOTES

NOTES

TERMS OF SALE

1. With respect to goods purchased by Buyer from Seller ("Goods"), no contract exists until Buyer places order for delivery and such order is accepted by Seller's acknowledging receipt of the order, by Seller's commencement of work on the Goods ordered, or by Seller's shipment of the Goods, whichever occurs first. Any acceptance will be limited to the express terms contained on the face hereof. Additional or different terms in Buyer's form or any attempt by Buyer to vary in any degree any of the terms of this of this quotation shall be deemed material and are objected to and rejected, but this shall not prevent the formation of a contract between Buyer and Seller unless such variances are in the terms of the description, quantity, price or delivery schedule of the goods, and the order shall be deemed accepted by Seller without said additional or different terms.

2. All agreements are contingent upon strikes, accidents and other reasons for delay beyond Seller's control.

3. Where a separate charge is made for specially designed tools and dies, Seller will maintain such tools and dies without further cost to Buyer for the life of such tool or die so long as the part remains active and the design is not changed and Seller will not use such tools and dies for others without Buyer's permission, but Buyer acquires no right to remove any such tools or dies from Seller's factory.

4. Seller warrants to Buyer that the Goods purchased by Buyer from Seller shall be free from defects in material and workmanship. This warranty is the only warranty applicable to the Goods. THERE ARE NO OTHER WARRANTIES OF ANY KIND, EXPRESS OR IMPLIED, INCLUDING BUT NOT LIMITED TO THE IMPLIED WARRANTIES OF MERCHANTABILITY AND FITNESS FOR A PARTICULAR PURPOSE WHICH ARE HEREBY DISCLAIMED.

5. All Goods shall be inspected by Buyer when received and Seller shall not be liable for any defect unless notified in writing within 60 days after delivery.

6. Seller's liability for breach of warranty shall be limited solely and exclusively to repairing or replacing, at Seller's option, the defective Goods. In no event shall the liability of Seller for breach of any contractual provision relating to the Goods exceed the purchase price of the Goods quoted herein. In no event shall Seller be liable for any special, incidental or consequential damages arising out of Buyer's use or sale of the Goods or Seller's breach of any contractual provisions relating to the Goods, including but not limited to any loss of profits or production by Buyer. Any action resulting from any breach by Seller must be commenced within one year after the cause of action accrued.

7. Except to the extent caused by Seller's breach of warranty, Buyer shall indemnify and hold harmless Seller, its employees, officers and directors, and their respective successors and assigns, (collectively, "Indemnities") from and against any and all liability, damages, claims, causes of action, losses, costs and expenses (including attorneys' fees) of any kind (collectively, "Damages") arising out of injuries to any person (including death) or damage to any property caused by or related to the Goods or any negligent act or omission of Buyer, its employees or agents. Buyer shall indemnify and hold harmless each of the Indemnities from and against any and all Damages, royalties and license fees arising from or for infringement of any patent by reason of any sale or use of the Goods or the manufacture of the Goods to Buyer's specifications or sample. Upon the tendering of any of the foregoing suits or claims to Buyer, Buyer shall defend the same at Buyer's expense. The foregoing obligations of Buyer shall apply whether Seller or Buyer defends such suits or claim.

8. Seller reserves the right to over and under ship by not more than 10% of specified quantity.

9. Small quantities are considered prototype quantities and cannot be returned since the cost of re-inspecting and handling them is generally higher than the value of the parts. Larger quantities may not be returnable depending on the ability to re-sell these parts within a reasonable time period. Special runs are not returnable. All returns must be authorized and an Authorization Number is required. Please contact our Customer Service at springsales@asraymond.com or by phone at 419-891-9292. Unauthorized returns will be returned at customer's expense. All authorized returns must be in their original packaging and labeling to insure lot control integrity. Parts cannot be altered or used in any fashion. Parts from separate lots cannot be mixed. A restocking fee will be charged to authorized returns. Additional charges may be required for re-inspection, cleaning and repackaging. Credit for damaged parts will not be issued. All returns will be shipped to the authorized return center pre-paid by sender. Actual credit issued will be for the quantity of acceptable parts at the original piece price, less the restocking charge, less the original freight and any other charges that are necessary to return the parts to a saleable condition.

10. Please note that all indicated prices on our web site are in US$, and are for standard product shipped within the continental USA, including Alaska. For Canada orders, please call 1-800-263-4256 - Fax (419) 891-5979. For all other countries, please contact our Customer Service Department as indicated above or our International Distributors listed on page 319.

The product data reported in this catalog represents typical values and is not intended to duplicate any specific customers test results. For product-specific AQL's, contact your ASR sales representative, as indicated tolerances may not apply. The catalog data presented is intended to be used as a guide only. It is not intended to be used to determine the suitability of the product for any specific customer application. AS Raymond strongly suggests that each customer thoroughly test the AS Raymond product to determine the actual suitability of the AS Raymond product in their specific application. The customer is responsible for determining the suitability of AS Raymond products in their applications. For more detailed information about these catalog products please contact your AS Raymond sales representative.

FOR ADDITIONAL INFORMATION ON ASSOCIATED SPRING RAYMOND POLICIES, VISIT **WWW.ASRAYMOND.COM/FAQ**

Associated Spring RAYMOND, A WORLD CLASS SUPPLIER

Our International Locations. Associated Spring RAYMOND products are distributed throughout the world. To locate our local distributor, see the listing below.

ASR LOCATIONS

AMERICAS

United States
Associated Spring RAYMOND
Global Headquarters
370 W. Dussel Dr. - Suite A
Maumee, OH 43537
Phone: 419-891-9292
Fax: 419-891-9192
E-mail: springsales@asraymond.com
www.asraymond.com

Mexico
Raymond Distribution - Mexico SA de CV
Av. Concordia No. 4601-A
Col. Apodaca Centro
Apodaca, N.L. Mexico 66600
Phone: +52-81-81450680
Fax: +52-81-81450679
E-mail: ventas@asraymond.com
www.asraymond.com.mx

EUROPE & MIDDLE EAST

United Kingdom
Associated Spring SPEC Ltd.
European Headquarters
Unit 4 Grosvenor Business Centre
Vale Park
Evesham WR11 1GS
Phone: 01386 443366
E-mail: sales@assocspring.co.uk
www.assocspring.co.uk

France
Ressorts SPEC
Batiment HERMES 2
ZA de Pissaloup
4 rue Edouard Branly
78190 TRAPPES
Phone: 01 30 68 6363
Fax: 01 30 68 4050
E-mail: info@ressortsspec.com
www.resortsspec.com

Germany
Associated Spring RAYMOND GmbH
Heimrodstr. 10
64625 Bensheim, Deutschland
Phone: (49) 6251 93-3858-04
Fax: (49) 6021-44-566-46
E-mail: info@asraymond.de
www.asraymond.de

Spain
Barnes Group Spain, S.R.L.
La Peña 6 - Pab. 5
01013 Vitoria-Gasteiz
Phone: 0034 945 147542
Fax: 0034 945 137655
E-mail: ventas@bgespana.com
www.bgespana.com

ASIA/PACIFIC

Singapore
Associated Spring RAYMOND Asia
15A Tuas Road
Jurong
Singapore 638517
Phone: (65) 6863 5636
Fax: (65) 6863 6325
E-mail: sales@raymondasia.com
www.raymondasia.com

China
Associated Spring RAYMOND (Shanghai) Co., Ltd.
5th Floor (North)
No. 4 Building
No. 825 Ningqiao Road
Pudong New District
Shanghai 201206, China
E-mail: csr.cn@raymondasia.com
www.asraymond.cn

ASR DISTRIBUTORS

Canada
Producto
349 Bowes Rd. Unit 21
Vaughan, ON L4L-8A3
Phone: 905-856-9990
Fax: 905-856-9887
Email: sales@productodiemakers.com
www.productodiemakers.com

United States
DIECO
30600 Aurora Rd Ste 160
Solon, OH 44139
Phone: 1-800-237-1440
Fax: 1-440-542-0250
www.dieco.us

D-M-E
29111 Stephenson Hwy.
Madison Heights
MI 48071 USA
Phone: +248.398.6000
Fax: +248.398.6174
na.dmecompany.com

Fastenal
Phone: 877-507-7555
www.fastenal.com

W.W. Grainger, Inc.
Phone: 1-800-472-4643
www.grainger.com

Marathon Sales, Inc.
17599 Paxton Ave
Lansing, IL 60438
Phone: 1-800-221-7317
Fax : 1-800-726-3078
www.marathonsalesinc.com

MSC Industrial Supply Co.
Phone: 1-800-645-7270
www.mscdirect.com

Superior Die Set Corp.
900 W Drexel Ave,
Oak Creek, WI 53154
Phone (414) 764-4900
Fax (800) 657-0855
www.supdie.com

Czech Republic
Cecho – Bohumil Cempírek S.R.O
Polnicka 151
591 01 Zdár nad Sázavou
Phone: 00 420 566 620705
Fax: 00 420 566 620706
E-mail: pruziny@cecho.cz
www.cecho.cz

Denmark
Sodemann Industrifjedre A/S
Industrivej 21
DK 8260 Viby-J
Denmark
Phone: (45) 86 72 00 99
Fax: (45)86 29 97 86
E-mail: sif@fjedre.dk
www.fjedre.dk

Finland & Russia
Meconet Oy
Honkanummentie 8
FI-01260 Vantaa
Phone: +358 (0) 207 699 300
Fax: +358 (0) 207 699 335
E-mail: reino.heikkinen@meconet.net
www.meconet.net

Germany
Febrotec GmbH
Frankfurter Strasse 76
D-58553 Halver
Phone: (49) 2353 4866
Fax: (49) 2353 4301
E-mail: federn@febrotec.de
www.febrotec.de

Hungary
Biotek KFT
1165 Budapest
Bokenyfoldi UT 104 Hungary
Phone: (36) 1 434 2900
Fax: (36) 1 260 8635
Email: biotek@biotek.hu

Israel
Delta Elkon Mechanical Products Ltd.
P.O. Box 8262
New Industrial Zone
South Netaneya 42504
Phone: (972) 1 599 500 557
Fax: (972) 9 865 8492
E-mail: natasha@delta-elkon.co.il
www.delta-elkon.co.il

Italy
Metersprings Srl
Via Molino 64
13891 Camburzano (BI)
P.IVA C.F. 02132550027
Phone: (39) 015 23581
Fax: (39) 015 23646
E-mail: meter@meterspec.it
www.meterspec.it

The Netherlands
Amatec
Jac P Thijsseweg 14
NL-2408 ER Alphen Aan Den Rijn
The Netherlands
Phone: (31) 172 439359
Fax: (31) 172 440313
E-mail: info@amatec.nl
www.amatec.nl

Poland
FCPK-BYTÓW Sp. z.o.o.
ul.Le borska 26
77-100 Bytów
Phone: (48) 59 822 2026
Fax: (48) 59 822 9703
E-mail: fcpk@fcpk.com.pl
www.fcpk.com.pl

Sweden
EWES STÅLFJÄDER AB
Lundavagen 45
S-330 10 Bredaryd
Phone: (46) 370 86700
Fax: (46) 370 86249
E-mail: info@ewes.se
www.ewes.se

Switzerland
Ressor ts du Léman
Chemin de la Gravière 16
1225 Chêne-Bourg
Phone: +41 (0) 22 860 13 10
Fax: +41 (0) 22 860 13 12
E-mail: info@ressortsduleman.ch
www.ressortsduleman.ch

India
Star Circlips & Engineering Ltd
Hingna Industrial Estate
Nagpur-440 016
Phone: (91) 7104 234742
Fax: (91) 7104 237628
E-mail: sales@starcirclips.net
www.starcirclips.com

FOR INFORMATION ON ALTERNATIVE FINISHES, SEE PAGE 311

Printed in U.S.A. © 2019 Barnes Group Inc.

The Largest Selection of Engineered Spring Solutions in the World!

Associated Spring RAYMOND utilizes 135 years of spring design expertise to provide its customers with a solution for their industrial spring needs. With the largest and most comprehensive selection of catalog products ranging from mechanical wire springs and spring washers to mechanical die springs, gas springs and mechanical struts, Associated Spring RAYMOND can reduce the cost and lead time compared to custom designs. This allows customers to rapidly prototype their innovation or keep their operation lines in motion to better serve their customers and gain a competitive edge in their respective markets.

Raymond | m-Struts UNMATCHED PERFORMANCE | SPEC Stock Precision Engineered Components | n-Struts FLUID PERFORMANCE EVERYTIME | SPD | CloverDome

Associated Spring Raymond
www.asraymond.co.uk
Unit 4
Grosvenor Business Centre
Vale Park, Evesham
Worcs. WR11 1GS
Tel: +44 (0)1386 443366
Fax: +44 (0)1386 446669
E-mail: sales@assocspring.co.uk

Ressorts SPEC
www.ressortsspec.com
Bâtiment HERMES 2,
ZA de Pissaloup
4 rue Edouard Branly
78190 TRAPPES
Tel: (33) 01 30 68 6363
Fax: (33) 01 30 68 4050
E-mail: info@ressortsspec.com

Barnes Group Spain, S.R.L.
www.bgespana.com
La Peña 6 - Pab. 5
01013 Vitoria-Gasteiz
Tel: (34) 945 147542
Fax: (34) 945 137655
E-mail: ventas@bgespana.com

Associated Spring Raymond GmbH
www.asraymond.de
Heimrodstraße 10
64625 Bensheim,
Germany
E-mail: info@asraymond.de

asraymond.co.uk | asraymond.fr | asraymond.es | asraymond.de | asraymond.com