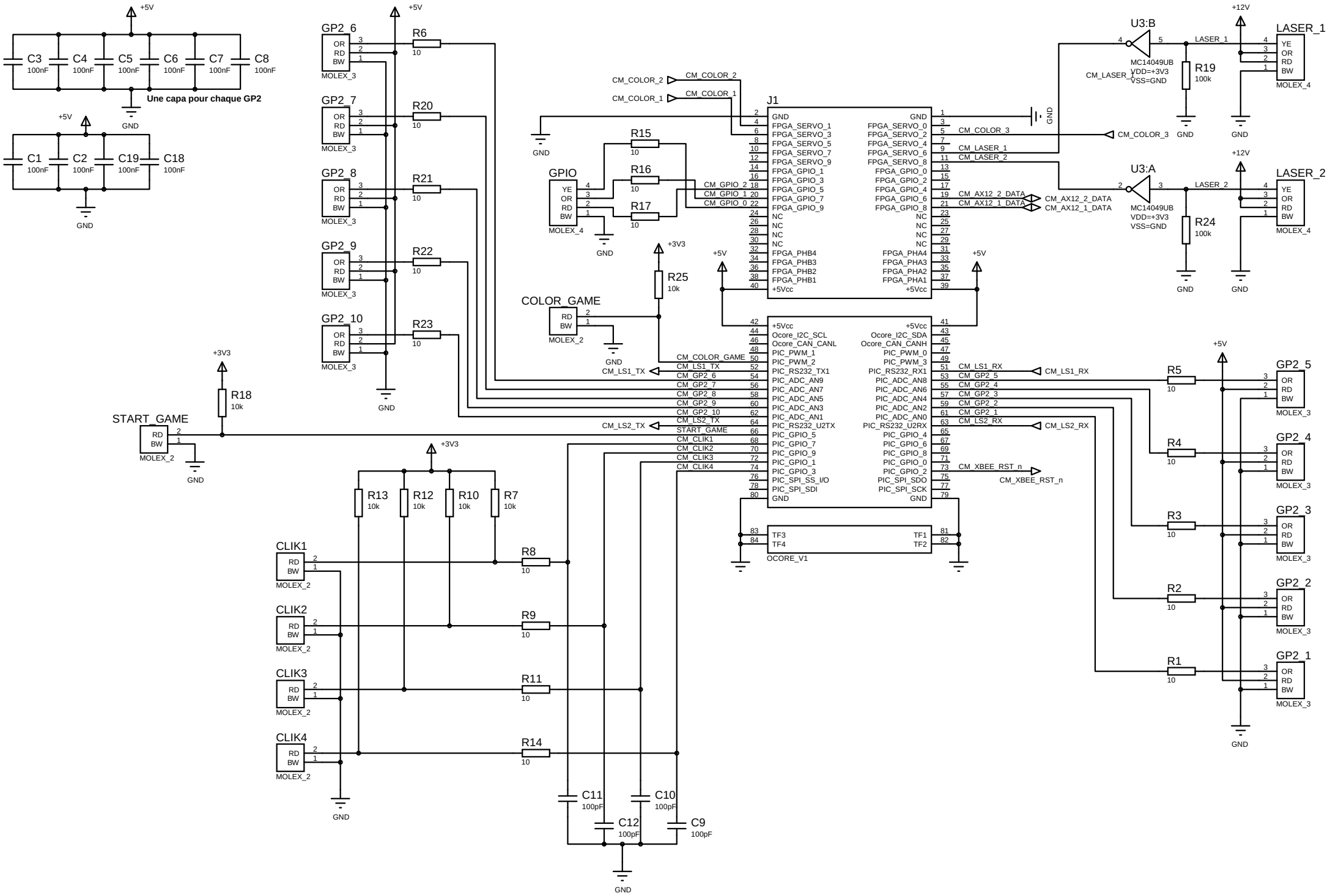
+5V
C3 100nF
C4 100nF
C5 100nF
C6 100nF
C7 100nF
C8 100nF
Une capa pour chaque GP2
GND
C1 100nF
C2 100nF
C19 100nF
C18 100nF
GP2_6
GP2_7
GP2_8
GP2_9
GP2_10
OR
RD
BW
MOLEX_3
R6
R20
R21
R22
R23
10
CM_COLOR_2
CM_COLOR_1
J1
GND
FPGA_SERVO_1
FPGA_SERVO_3
FPGA_SERVO_5
FPGA_SERVO_7
FPGA_SERVO_9
FPGA_GPIO_1
FPGA_GPIO_3
FPGA_GPIO_5
FPGA_GPIO_7
FPGA_GPIO_9
NC
FPGA_PHB4
FPGA_PHB3
FPGA_PHB2
FPGA_PHB1
+5Vcc
FPGA_SERVO_0
FPGA_SERVO_2
FPGA_SERVO_4
FPGA_SERVO_6
FPGA_SERVO_8
FPGA_GPIO_0
FPGA_GPIO_2
FPGA_GPIO_4
FPGA_GPIO_6
FPGA_GPIO_8
FPGA_PHA4
FPGA_PHA3
FPGA_PHA2
FPGA_PHA1
CM_COLOR_3
CM_LASER_1
CM_LASER_2
CM_AX12_2_DATA
CM_AX12_1_DATA
R15
R16
R17
GPIO
YE
OR
RD
BW
MOLEX_4
CM_GPIO_2
CM_GPIO_1
CM_GPIO_0
R25
10k
+3V3
COLOR_GAME
MOLEX_2
CM_COLOR_GAME
CM_LS1_TX
CM_GP2_6
CM_GP2_7
CM_GP2_8
CM_GP2_9
CM_GP2_10
CM_LS2_TX
START_GAME
CM_CLIK1
CM_CLIK2
CM_CLIK3
CM_CLIK4
+5Vcc
Ocore_I2C_SCL
Ocore_CAN_CANL
PIC_PWM_1
PIC_PWM_2
PIC_RS232_TX1
PIC_ADC_AN9
PIC_ADC_AN7
PIC_ADC_AN5
PIC_ADC_AN3
PIC_ADC_AN1
PIC_RS232_U2TX
PIC_GPIO_5
PIC_GPIO_7
PIC_GPIO_9
PIC_GPIO_1
PIC_GPIO_3
PIC_SPI_SS_I/O
PIC_SPI_SDI
Ocore_I2C_SDA
Ocore_CAN_CANH
PIC_PWM_0
PIC_PWM_3
PIC_RS232_RX1
PIC_ADC_AN8
PIC_ADC_AN6
PIC_ADC_AN4
PIC_ADC_AN2
PIC_ADC_AN0
PIC_RS232_U2RX
PIC_GPIO_4
PIC_GPIO_6
PIC_GPIO_8
PIC_GPIO_0
PIC_GPIO_2
PIC_SPI_SDO
PIC_SPI_SCK
CM_LS1_RX
CM_LS2_RX
CM_XBEE_RST_n
TF3
TF4
TF1
TF2
OCORE_V1
R18
10k
R13
R12
R10
R7
R8
R9
R11
R14
CLIK1
CLIK2
CLIK3
CLIK4
C11 100pF
C10 100pF
C12 100pF
C9 100pF
U3:B
U3:A
MC14049UB
VDD=+3V3
VSS=GND
LASER_1
LASER_2
R19 100k
R24 100k
+12V
R5
R4
R3
R2
R1
GP2_5
GP2_4
GP2_3
GP2_2
GP2_1

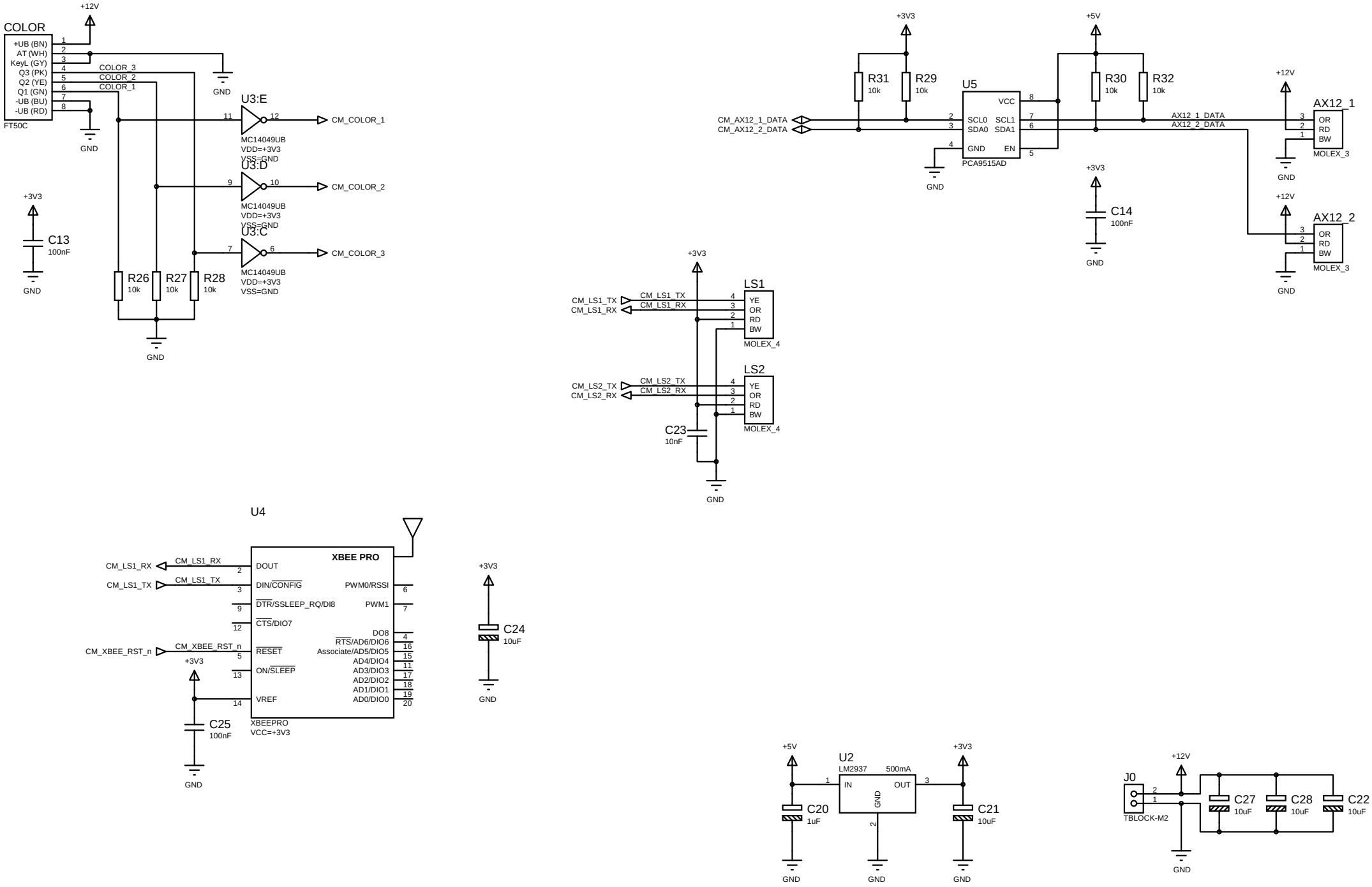
COLOR
+UB (BN)
AT (WH)
KeyL (GY)
Q3 (PK)
Q2 (YE)
Q1 (GN)
-UB (BU)
-UB (RD)
FT50C
+12V
GND
COLOR_3
COLOR_2
COLOR_1
U3:E
U3:D
U3:C
MC14049UB
VDD=+3V3
VSS=GND
CM_COLOR_1
CM_COLOR_2
CM_COLOR_3
+3V3
C13
100nF
R26
R27
R28
10k
R31
R29
R30
R32
U5
VCC
SCL0
SDA0
SCL1
SDA1
EN
PCA9515AD
CM_AX12_1_DATA
CM_AX12_2_DATA
AX12_1_DATA
AX12_2_DATA
AX12_1
AX12_2
OR
RD
BW
MOLEX_3
C14
LS1
LS2
YE
MOLEX_4
CM_LS1_TX
CM_LS1_RX
CM_LS2_TX
CM_LS2_RX
C23
10nF
U4
XBEE PRO
DOUT
DIN/CONFIG
DTR/SSLEEP_RQ/DI8
CTS/DIO7
RESET
ON/SLEEP
VREF
PWM0/RSSI
PWM1
DO8
RTS/AD6/DIO6
Associate/AD5/DIO5
AD4/DIO4
AD3/DIO3
AD2/DIO2
AD1/DIO1
AD0/DIO0
CM_XBEE_RST_n
XBEEPRO
VCC=+3V3
C24
10uF
C25
100nF
U2
LM2937
500mA
IN
OUT
C20
1uF
C21
10uF
J0
TBLOCK-M2
C27
C28
C22