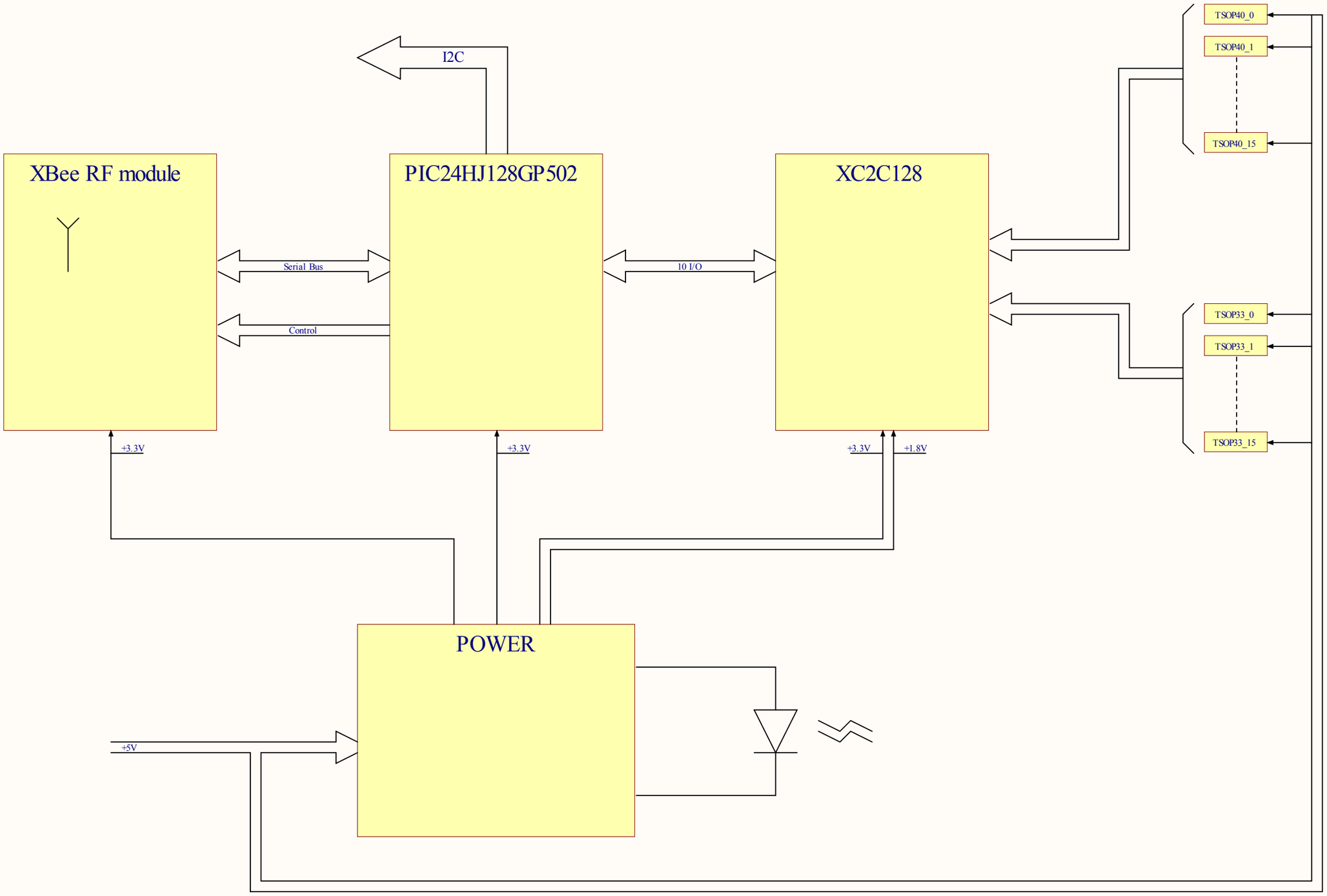

Title *Balise IR-Rx - Synoptique*			*Ouffteam* *3 place Camot* *26100* *Romans sur Isère* *ouffteam@gmail.com*
Size: A3	Number:	Revision: B	
Date: 22/01/2011	Time: 23:37:35	Sheet 1 of 5	
File: C:\Elec\ouffteam\2011\Balises IR\schematic\Rx_syno.SchDoc			

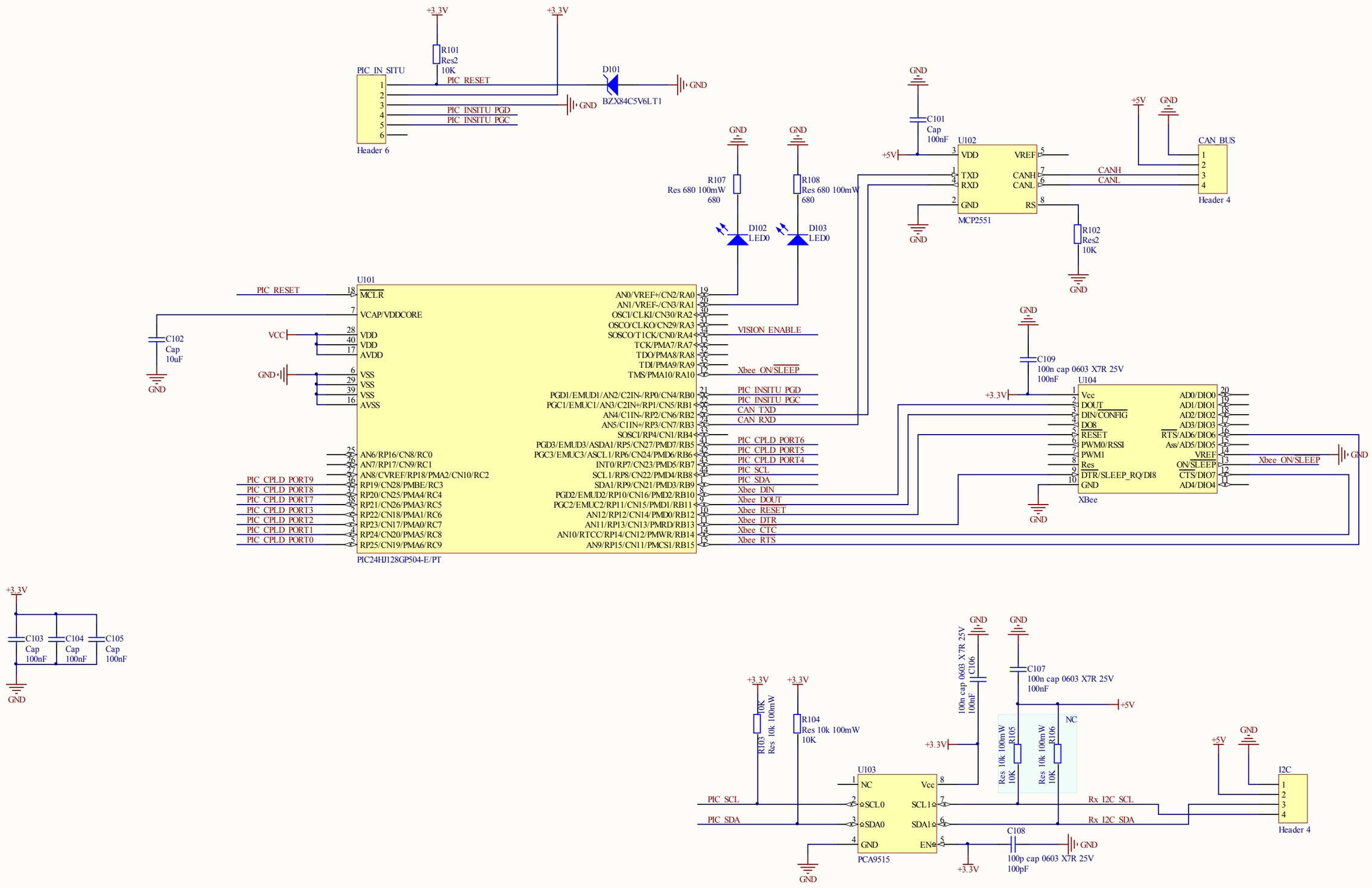

Title	*Balise IR-Rx - Controleur*		*Ouffteam* *3 place Camot* *26100* *Romans sur Isère* *ouffteam@gmail.com*
Size: A3	Number:	Revision: B	
Date: 22/01/2011	Time: 23:37:35	Sheet 2 of 5	
File: C:\Elec\ouffteam\2011\Balises IR\schematic\Rx_micro.SchDoc			

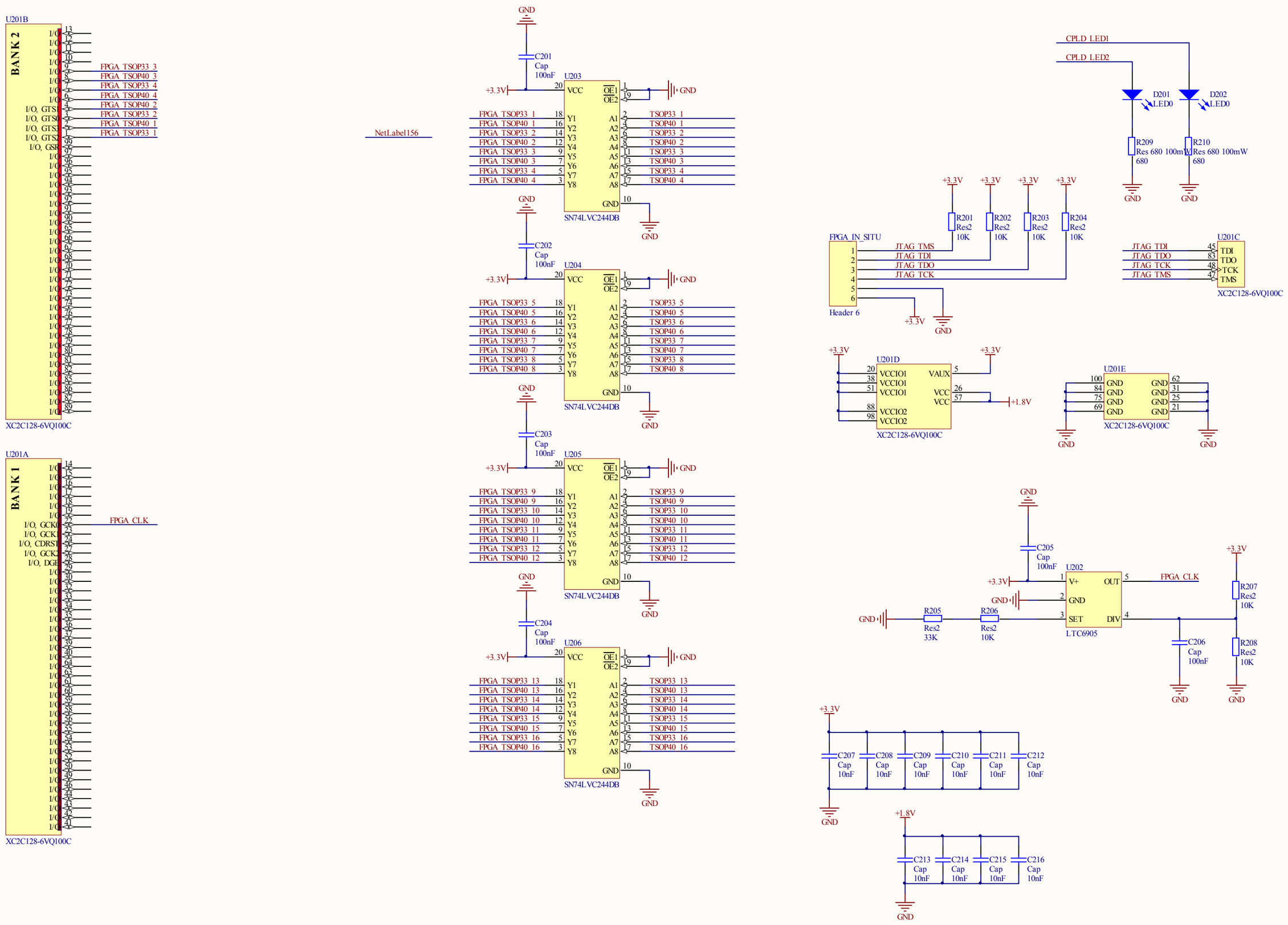

Title	Balise IR-Rx - Logic		Ouffteam 3 place Camot 26100 Romans sur Isère ouffteam@gmail.com
Size: A3	Number:	Revision: B	
Date: 22/01/2011	Time: 23:37:35	Sheet 3 of 5	
File: C:\Elec\ouffteam\2011\Balises IR\schematic\Rx_logic.SchDoc			

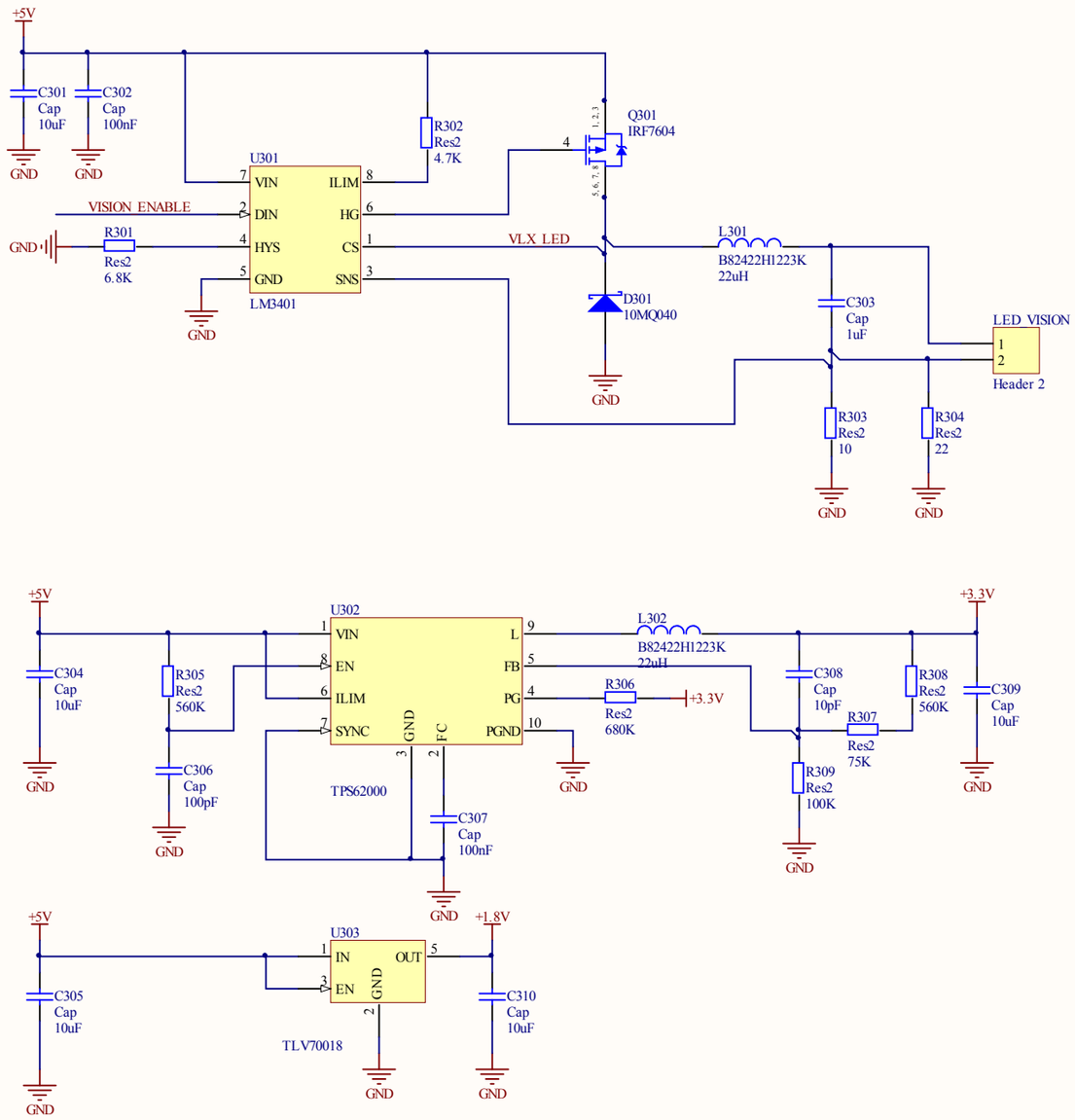

Title	*Balise IR-Rx - Power*		*Ouffteam* *3 place Carnot* *26100* *Romans sur Isère* *ouffteam@gmail.com*
Size: A3	Number:	Revision: B	
Date: 22/01/2011	Time: 23:37:35	Sheet 4 of 5	
File: C:\Elec\ouffteam\2011\Balises IR\schematic\Rx_power.SchDoc			

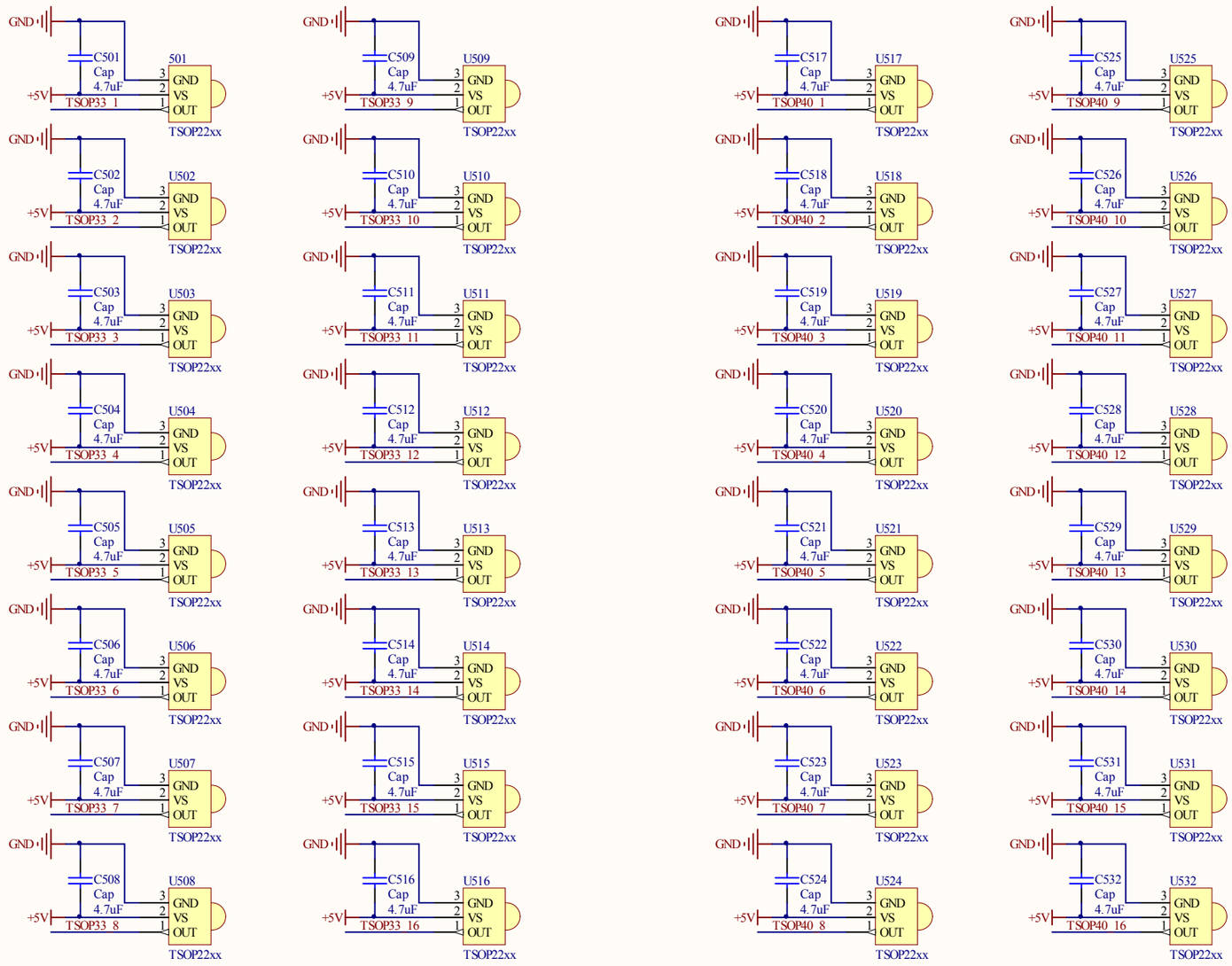

Title **Balise IR-Rx - TSOP**			*Ouffteam* *3 place Camot* *26100* *Romans sur Isère* *ouffteam@gmail.com*
Size: A3	Number:	Revision: B	
Date: 22/01/2011	Time: 23:37:35	Sheet 5 of 5	
File: C:\Elec\ouffteam\2011\Balises IR\schematic\Rx_TSOP.SchDoc			