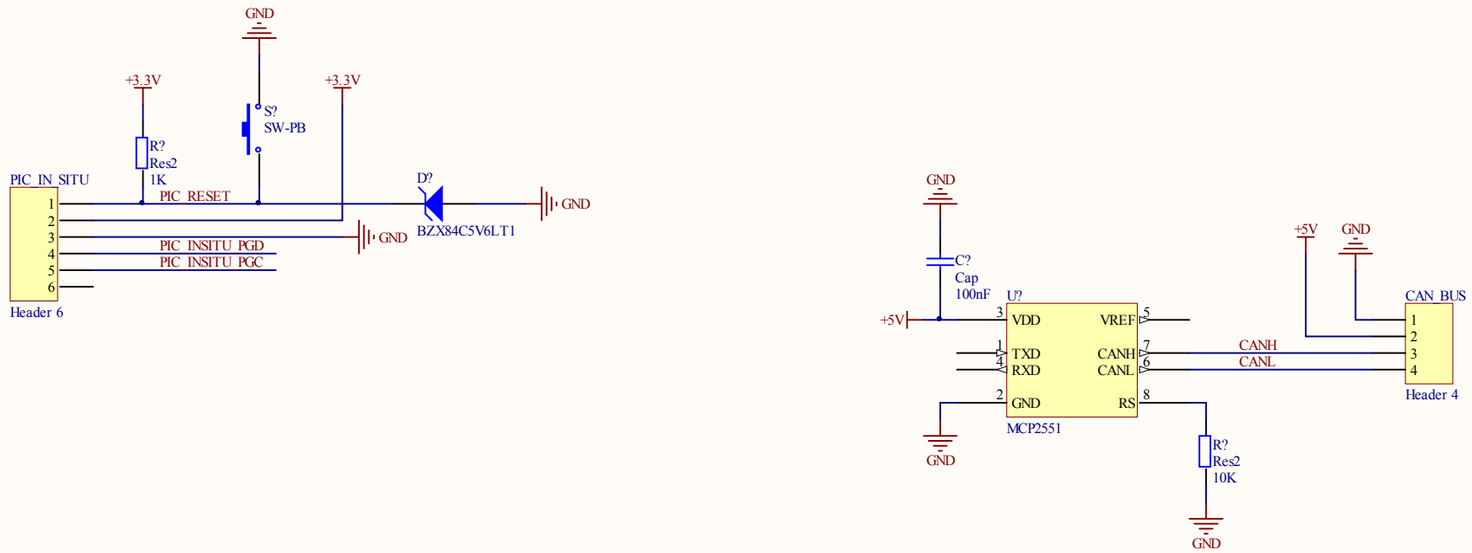

Title	*Balise IR-Rx - Controleur*		*Ouffteam* *3 place Camot* *26100* *Romans sur Isère* *ouffteam@gmail.com*
Size: A3	Number:	Revision: B	
Date: 20/01/2011	Time: 14:03:57	Sheet 1 of 4	
File: C:\Elec\ouffteam\2011\Balises IR\schematic\Rx_micro.SchDoc			

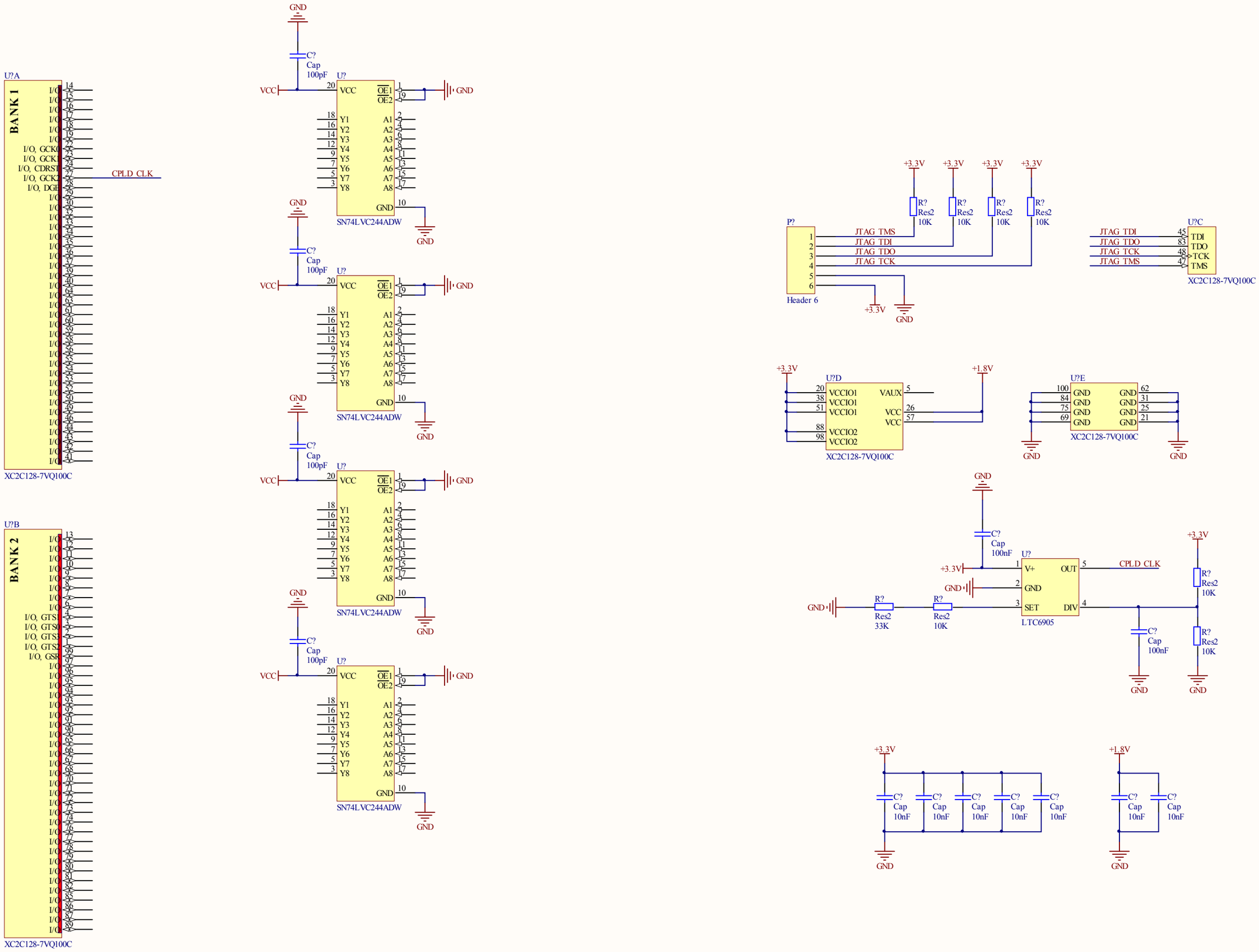

Title **Balise IR-Rx - Logic**			*Ouffteam* *3 place Camot* *26100* *Romans sur Isère* *ouffteam@gmail.com*
Size: A3	Number:	Revision: B	
Date: 20/01/2011	Time: 14:03:57	Sheet 2 of 4	
File: C:\Elec\ouffteam\2011\Balises IR\schematic\Rx_logic.SchDoc			

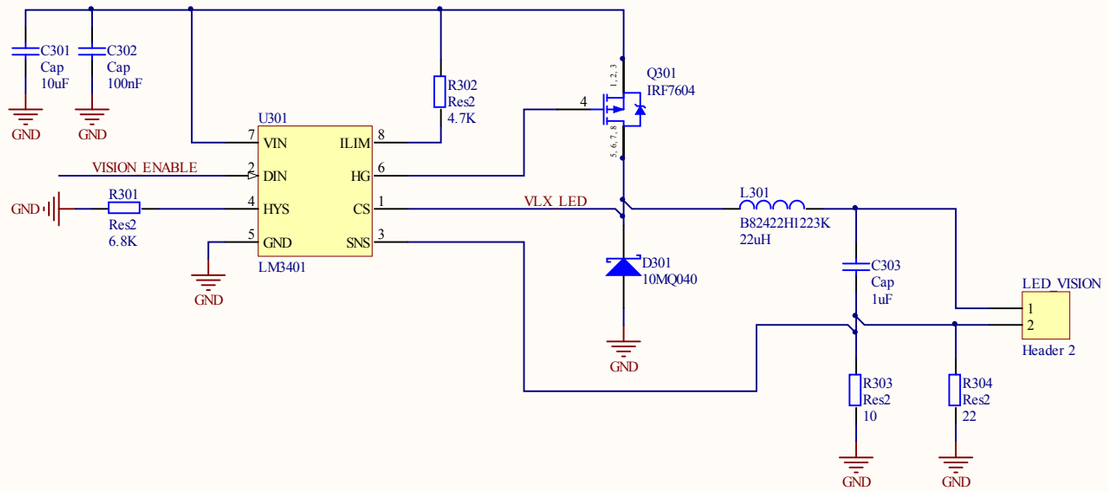

Title *Balise IR-Rx - Power*			*Ouffteam* *3 place Camot* *26100* *Romans sur Isère* *ouffteam@gmail.com*
Size: A3	Number:	Revision: B	
Date: 20/01/2011	Time: 14:03:57	Sheet 3 of 4	
File: C:\Elec\ouffteam\2011\Balises IR\schematic\Rx_power.SchDoc			