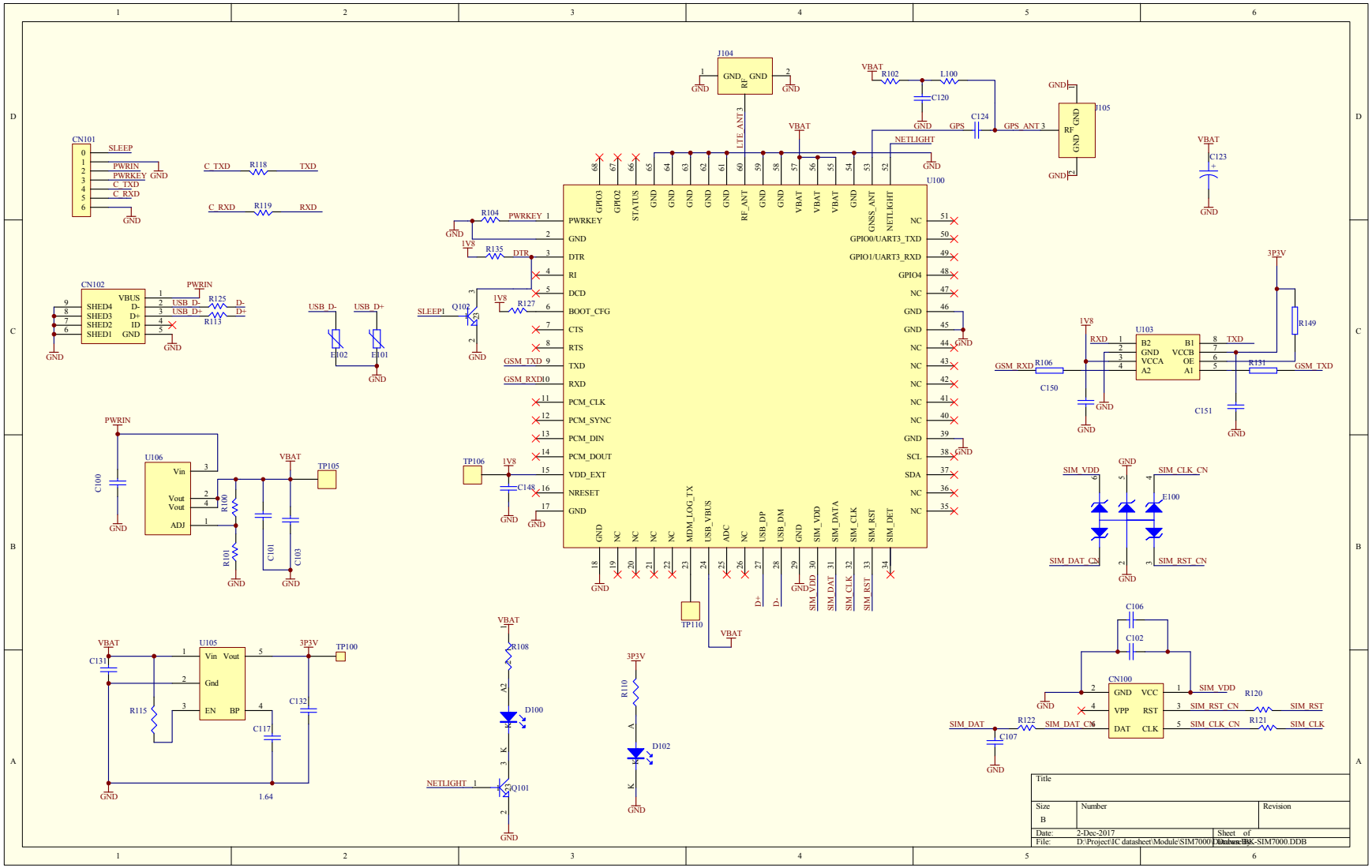
CN101
SLEEP
PWRIN
PWRKEY
C_TXD
C_RXD
GND
C_TXD
R118
TXD
C_RXD
R119
RXD
CN102
VBUS
SHED4
SHED3
SHED2
SHED1
D-
D+
ID
GND
USB_D-
USB_D+
R125
R113
E102
E101
PWRIN
C100
U106
Vin
Vout
ADJ
R100
R101
C101
C103
VBAT
TP105
U105
Gnd
EN
BP
3P3V
TP100
C131
R115
C117
C132
1.64
J104
RF
LTE_ANT 3
J105
GPS
GPS_ANT 3
C124
C120
R102
L100
NETLIGHT
C123
U100
PWRKEY
GND
DTR
RI
DCD
BOOT_CFG
CTS
RTS
TXD
RXD
PCM_CLK
PCM_SYNC
PCM_DIN
PCM_DOUT
VDD_EXT
NRESET
GPIO3
GPIO2
STATUS
RF_ANT
GNSS_ANT
GPIO0/UART3_TXD
GPIO1/UART3_RXD
GPIO4
NC
SCL
SDA
MDM_LOG_TX
USB_VBUS
ADC
USB_DP
USB_DM
SIM_VDD
SIM_DATA
SIM_CLK
SIM_RST
SIM_DET
R104
PWRKEY 1
R135
DTR
Q102
SLEEP1
R127
GSM_TXD 9
GSM_RXD10
TP106
C148
TP110
R108
D100
NETLIGHT 1
Q101
R10
D102
U103
B2
B1
VCCA
VCCB
A2
A1
OE
RXD
TXD
GSM_RXD
R106
C150
R131
GSM_TXD
R149
C151
3P3V
SIM_VDD
SIM_CLK_CN
SIM_DAT_CN
SIM_RST_CN
E100
C106
C102
CN100
VCC
VPP
RST
DAT
CLK
SIM_VDD
SIM_RST_CN
SIM_CLK_CN
R120
R121
SIM_RST
SIM_CLK
SIM_DAT
R122
SIM_DAT_CN
C107
Title
Size
B
Number
Revision
Date: 2-Dec-2017
Sheet of
File: D:\Project\JC datasheet\Module\SIM7000\Schematic\JC-SIM7000.DDB
Drawn By: