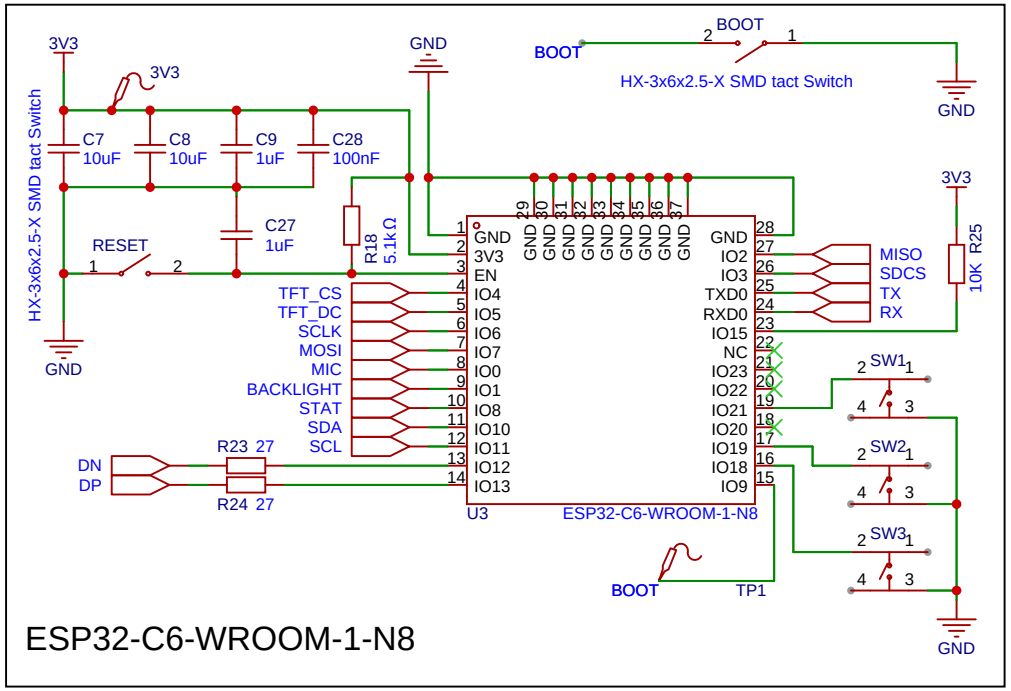

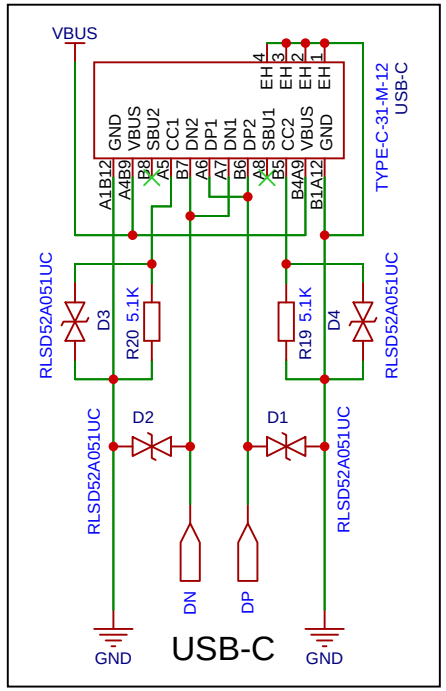

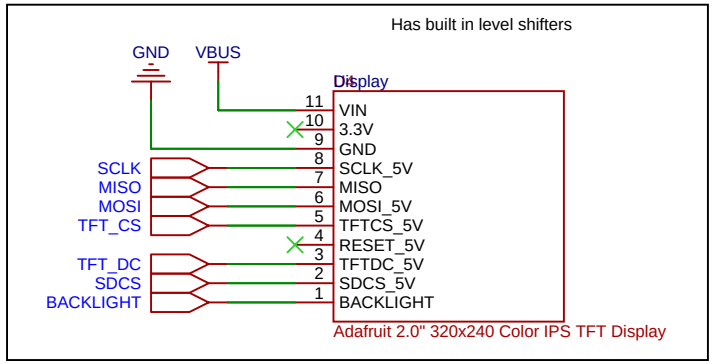

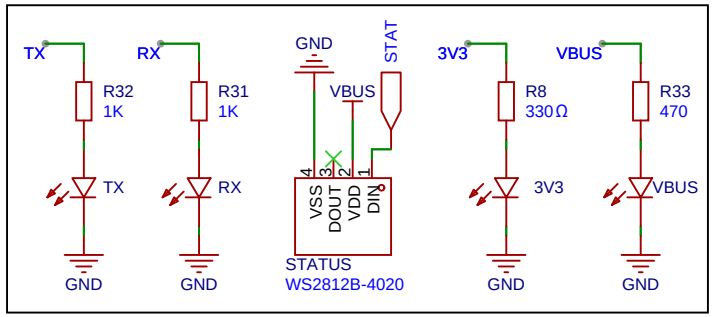

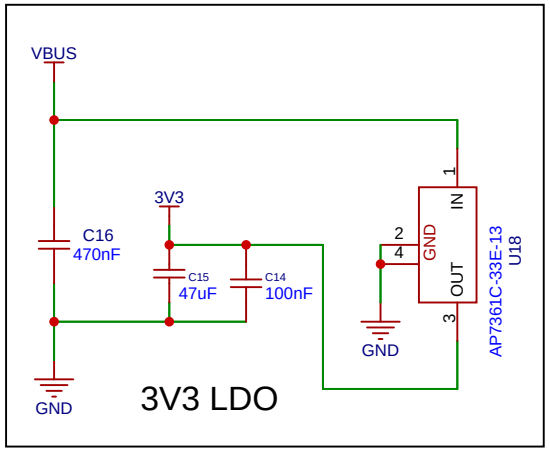

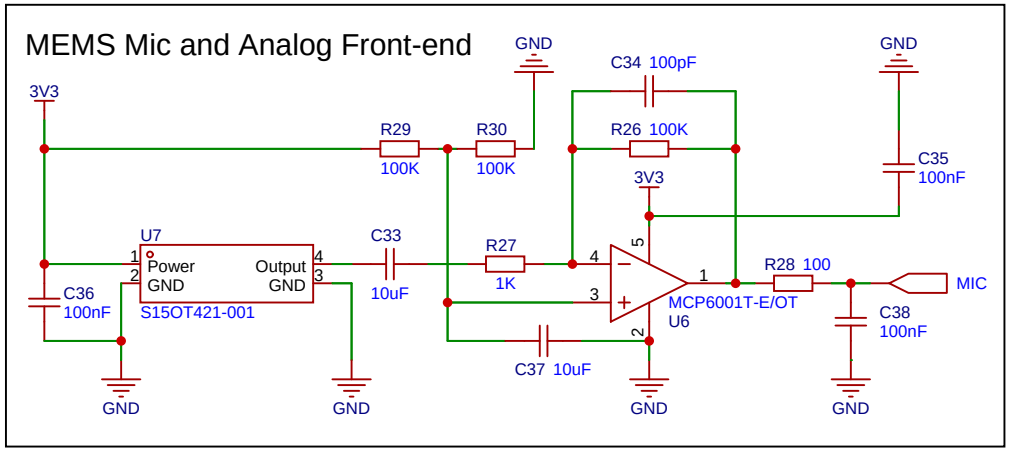

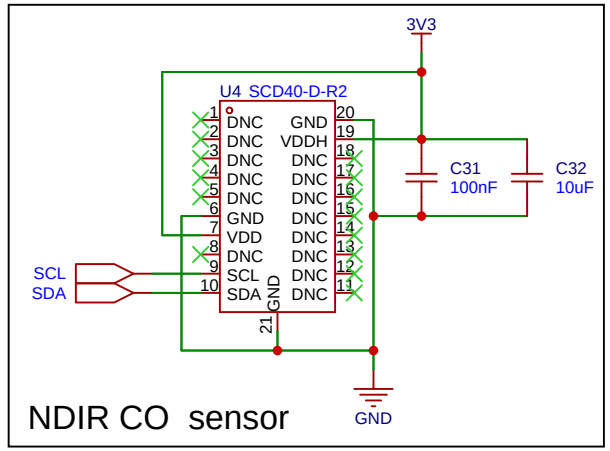

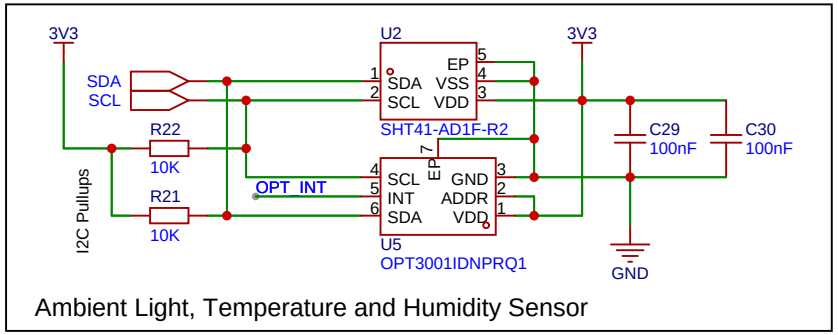

Schematic	Schematic1	Create at	2026-04-02
		Update at	2026-04-30
Board	Board1	Page	Room IQ
Drawn		ECE 4275 Project	
Reviewed			
		Version	Size	Page 1 Total 1
EasyEDA		V1.0	A4	EasyEDA.com