Device description

The SW6100-2/SW6100P-2 is a 3 nm process chip, with a next-generation Qualcomm® Snapdragon™ processor supporting 4G/5G sub-6 technologies designed exclusively for wearable designs. Key processor and memory characteristics include:

- 8.0 mm × 13.0 mm x 0.48 mm package-on-package (PoP) with 0.340 mm bottom pitch and 0.40 mm top pitch Top (PoP)
- Single Arm Cortex-A78 applications processor supporting up to 2.1 GHz, with 256 kB of L2 cache and 32 kB of dedicated L1 cache. Quad Core Arm Cortex-A55 applications processor supporting up to 1.95 GHz, with 64 kB of dedicated L2 cache and 32 kB of dedicated L1 cache per core
- 3 MB of shared L3 cache between all the cores
- Qualcomm® Adreno™ 621 graphics processing unit (GPU). Dedicated 2.5D LPI GPU for always-on display (AoD)
- Integrated wearable microcontroller (WM) system and ambient-mode microcontroller (AM) to handle low power display, audio, and sensor use cases with dual Arm Cortex-M55 core
- Display coprocessor (DCP) for always on display (AOD) support
- Dedicated digital signal processor (DSP) for Snapdragon sensor core and low-power audio subsystem
- Dedicated neural signal processor (NSP) for AI applications
- Dual-embedded neural processing units (e-NPU) for high-performance and always-on neural network (NN) applications
- Package-on-package (PoP) high-speed eMCP memory with 1 x 16 up to 4.2 GHz LPDDR5/5X SDRAM up to 4 GB and eMMC 5.1 up to 64 GB
- Always-on subsystem with RPM for power management

Key features

- Qualcomm® universal bandwidth compression (UBWC) with GPU
- 720 × 720 60 Hz, 4-layers, 1 × 4-lane DSI (D-PHY v1.2)
- 13 + 13 MP, 25 MP, 1080p60, 1 × 4-lane (D-PHY 1.2/C-PHY 1.2)
- 1 × eUSB2 support, with repeater integrated inside the PMIC
- PCIe Gen3 1-lane
- 1.2 V/1.8 V capable I/Os
- Multiple QUP engines to support I²C/UART/SPI/I³C
- Support for PSRAM with Hexadecimal/Octal SPI interface
- Supports 3GPP Rel. 17 RedCap with multimode 4G and 5G sub-6 SA transceiver SDR125
- QCC6100 chip attach to SoC offering:
  - WLAN IEEE 802.11a/b/g/n/ac/ax with Tri-band (2.4/5/6GHz)
  - Bluetooth® v5.4 with bluetooth low energy (BLE) audio
  - L1 and L5 GNSS support for navigation applications
  - UWB: 1 Tx + 1 Rx configuration

SW6100-2/SW6100P-2 high-level block diagram

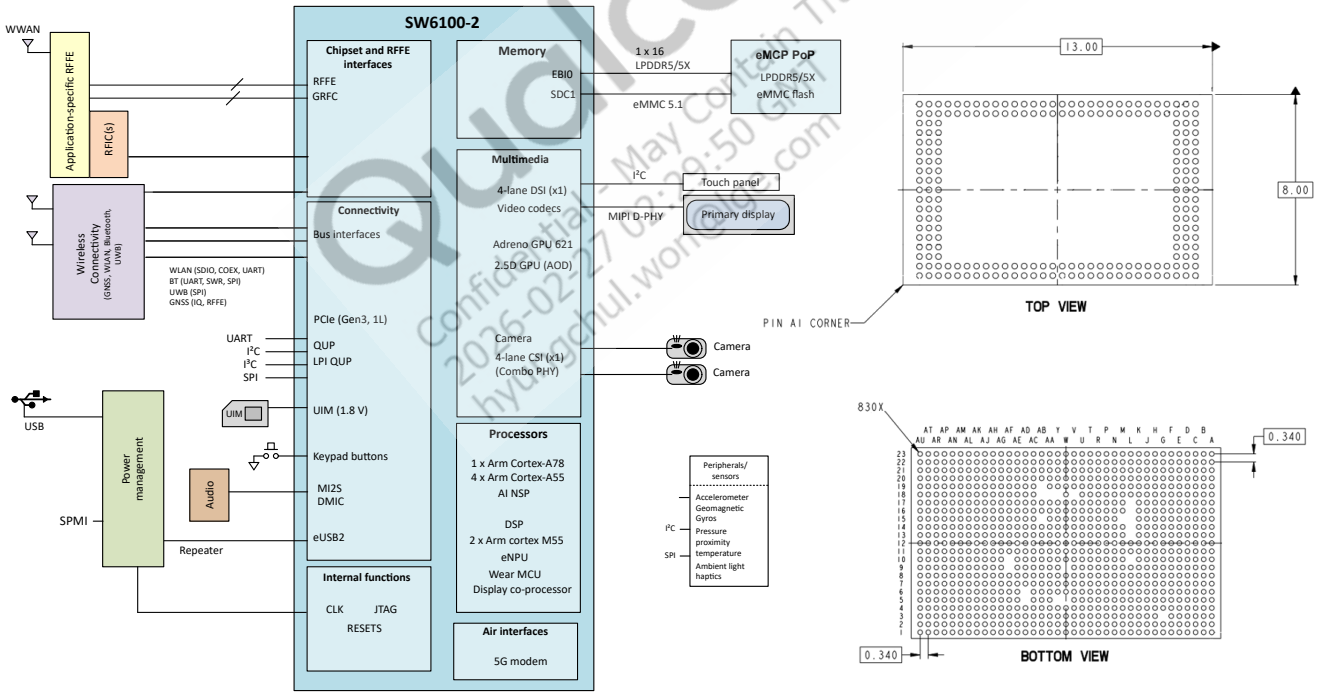

Confidential – Qualcomm Technologies, Inc. and/or its affiliated companies – May Contain Trade Secrets

NO PUBLIC DISCLOSURE PERMITTED: Please report postings of this document on public servers or websites to DocCtrlAgent@qualcomm.com.

© Qualcomm Technologies, Inc. and/or its subsidiaries. All rights reserved.

Contents

1 Introduction . . . 9
1.1 Functional block diagram . . . 9
1.2 Device variants . . . 10
1.3 SW6100-2/SW6100P-2 features . . . 11
2 Pin definitions . . . 14
2.1 I/O parameter definitions . . . 14
2.2 Pin assignments – bottom . . . 16
2.2.1 Pin map – bottom . . . 16
2.2.2 Pin descriptions – bottom . . . 18
2.3 Pin assignments – top . . . 32
2.3.1 Pin map – top . . . 32
2.3.2 Pin descriptions – top . . . 33
3 Electrical specifications . . . 36
3.1 Absolute maximum ratings . . . 36
3.2 Operating conditions . . . 38
3.3 Power delivery network specification . . . 42
3.4 DC power characteristics . . . 42
3.4.1 Average operating current . . . 42
3.4.2 Dhrystone and rock-bottom maximum power . . . 42
3.5 Power sequencing . . . 42
3.6 Digital-logic characteristics . . . 43
3.7 Timing characteristics . . . 47
3.7.1 Timing diagram conventions . . . 48
3.7.2 Rise and fall time specifications . . . 49
3.7.3 SDCC . . . 49
3.7.4 I^2S . . . 52
3.7.5 SoundWire . . . 54
3.7.6 SPMI . . . 56
3.7.7 SWD . . . 58
3.7.8 QUP . . . 59
3.8 Memory support . . . 62
3.9 Multimedia . . . 62
3.9.1 Camera interfaces . . . 62
3.9.2 Audio support . . . 63
3.9.3 Display support . . . 63
3.10 Connectivity . . . 63

Qualcomm
Confidential - May Contain Trade Secrets
2026-02-27 02:29:50 GMT
hyungchul.won@lge.com

3.10.1 USB interfaces . . . 63
3.10.2 UIM interface . . . 64
3.10.3 Digital microphone PDM interface . . . 64
3.10.4 SLIMbus interface . . . 64
3.10.5 PCM/TDM interfaces . . . 65
3.11 Internal functions . . . 66
3.11.1 Clocks . . . 66
3.11.2 Modes and resets . . . 68
3.11.3 JTAG . . . 68
3.11.4 SWD . . . 68
3.12 Power management interface . . . 69
3.12.1 RF and GRFC interfaces . . . 69
3.12.2 System power management interface (SPMI) . . . 69
4 Mechanical information . . . 70
4.1 Device physical dimensions . . . 70
4.2 Part marking . . . 71
4.3 Device ordering information . . . 72
4.4 Device identification for each sample type . . . 73
4.5 Thermal characteristics . . . 75
5 Carrier, storage, and handling information . . . 76
5.1 Manufacturers date code . . . 76
5.2 Carrier . . . 76
5.2.1 Tape and reel information . . . 76
5.2.2 Matrix tray information . . . 77
5.3 Device moisture sensitivity level . . . 78
5.4 Storage . . . 78
5.4.1 Bagged storage conditions . . . 78
5.4.2 Out-of-bag duration . . . 78
5.5 Handling . . . 78
5.5.1 Baking . . . 78
5.5.2 Electrostatic discharge . . . 79
5.6 Bar code label and packing for shipment . . . 79
6 PCB mounting guidelines . . . 80
6.1 RoHS compliance . . . 80
6.2 SMT assembly guidelines . . . 80
6.3 Daisy chain devices . . . 80
6.4 Board-level reliability . . . 80
6.5 High temperature warpage . . . 81

Qualcomm
Confidential - May Contain Trade Secrets
2026-02-27 02:29:50 GMT
hyungchul.won@lge.com

7 Part reliability 82
7.1 Reliability evaluation summary 82
7.2 Qualification sample description 83
8 Samples and known issues 85
8.1 Sample testing 85
8.1.1 Engineering samples (ES) 85
8.1.2 Commercial samples (CS) 85
8.2 Compatible software releases 85
8.3 Known issues 85
9 Revision history 86

Qualcomm
Confidential - May Contain Trade Secrets
2026-02-27 02:29:50 GMT
hyungchul.won@lge.com

Tables

Table 1-1: SW6100-2/SW6100P-2 device variants.... 10
Table 1-2: SW6100-2/SW6100P-2 features.... 11
Table 2-1: I/O description (pin type) parameters.... 14
Table 2-2: SW6100-2/SW6100P-2 bottom pin descriptions – General pins.... 18
Table 2-3: SW6100-2/SW6100P-2 bottom pin descriptions – General-purpose input/output ports.... 22
Table 2-4: SW6100-2/SW6100P-2 bottom pin descriptions – DNC, ground, and power-supply pins.... 28
Table 2-5: SW6100-2/SW6100P-2 top pin descriptions – General pins.... 33
Table 2-6: SW6100-2/SW6100P-2 top pin descriptions – NC, ground, and power-supply pins.... 34
Table 3-1: Absolute maximum ratings.... 36
Table 3-2: Operating conditions for voltage rails.... 38
Table 3-3: Operating conditions for voltage rails with AVS.... 40
Table 3-4: Dhrystone and rock bottom maximum power.... 42
Table 3-5: DC specification of eSPMI.... 43
Table 3-6: DC specification of 1.2 V GPIOs.... 44
Table 3-7: DC specification of 1.8 V GPIOs.... 45
Table 3-8: DC specification of I^2C 1.2 V/1.8 V.... 45
Table 3-9: DC specification of I^3C 1.2 V.... 46
Table 3-10: DC specification of SLIMbus.... 46
Table 3-11: DC specification of I^3C 1.8 V.... 47
Table 3-12: SDC1 timing specification with respect to controller – Regular mode.... 51
Table 3-13: SDC2 timing specification with respect to controller – Regular mode.... 51
Table 3-14: I^2S master AC specifications.... 52
Table 3-15: I^2S slave AC specifications.... 53
Table 3-16: SoundWire timing.... 55
Table 3-17: Primary mode (eSPMI0) SCLK output timing characteristics (38.4 MHz).... 56
Table 3-18: Primary mode (eSPMI0) SDATA output timing characteristics (38.4 MHz).... 57
Table 3-19: Primary mode (eSPMI0) Data receiver timing requirements (38.4 MHz).... 57
Table 3-20: Primary mode (eSPMI0) SDATA timing release parameters (38.4 MHz).... 58
Table 3-21: AC timing requirements.... 59

Qualcomm
Confidential - May Contain Trade Secrets
2026-02-27 02:29:50 GMT
hyungchul.won@lge.com

Table 3-22: SPI master TX modes of characterization.... 59
Table 3-23: SPI master RX modes of characterization.... 59
Table 3-24: SPI master timing (master at 50, 25 MHz).... 59
Table 3-25: SPI slave timing high performance (slave at 50 MHz).... 59
Table 3-26: SPI slave timing (slave at 25, 12.5 MHz).... 60
Table 3-27: AC timing parameters: I³C master timing except instances of SSC se8 and se9.... 62
Table 3-28: Supported MIPI_CSI standards and exceptions.... 62
Table 3-29: Supported MIPI_DSI standards and exceptions.... 63
Table 3-30: Supported USB standards and exceptions.... 63
Table 3-31: Supported UIM standards and exceptions.... 64
Table 3-32: Digital microphone timing.... 64
Table 3-33: Supported SLIMbus standards and exceptions.... 64
Table 3-34: PCM/TDM interface timing parameters.... 66
Table 3-35: CXO timing parameters.... 67
Table 3-36: Sleep-clock timing parameters.... 67
Table 3-37: JTAG interface timing characteristics.... 68
Table 3-38: AC timing parameters.... 69
Table 3-39: Supported RF and GRFC interfaces.... 69
Table 3-40: Supported SPMI standards and exceptions.... 69
Table 4-1: Device marking line definitions.... 71
Table 4-2: Example device identification code.... 72
Table 4-3: Device identification details.... 73
Table 4-4: Source configuration code.... 74
Table 5-1: Matrix tray key dimensions.... 77
Table 5-2: MSL ratings summary.... 78
Table 7-1: Silicon reliability results.... 82
Table 7-2: Package reliability results.... 82
Table 7-3: Device characteristics.... 83
Table 8-1: Software compatibility for each sample type (PRR value).... 85

Qualcomm
Confidential - May Contain Trade Secrets
2026-02-27 02:29:50 GMT
hyungchul.won@lge.com

Figures

Figure 1-1: SW6100-2 functional block diagram and example application.... 9
Figure 1-2: SW6100P-2 functional block diagram and example application.... 10
Figure 2-1: SW6100-2/SW6100P-2 bottom pin assignments.... 17
Figure 2-2: SW6100-2/SW6100P-2 top pin assignments.... 32
Figure 3-1: Timing diagram conventions.... 48
Figure 3-2: Rise and fall times under different load conditions.... 49
Figure 3-3: Single data rate – SDR mode.... 49
Figure 3-4: Double data rate – DDR mode.... 50
Figure 3-5: SDCC I/O AC characterization valid window.... 50
Figure 3-6: HS400 mode input timing.... 50
Figure 3-7: HS400 mode output timing.... 51
Figure 3-8: I^2S timing diagram.... 52
Figure 3-9: Duty cycle of clock output from the master.... 54
Figure 3-10: Setup and hold time.... 54
Figure 3-11: Output enable time (Toh), Hi-Z measurements (TZD and TDZ).... 55
Figure 3-12: Output valid time (Tov).... 55
Figure 3-13: Clock driver output waveform.... 56
Figure 3-14: Bus active data transmission timing.... 57
Figure 3-15: Bus active data receiver timing requirements.... 57
Figure 3-16: Bus handover timing.... 58
Figure 3-17: SWD timing requirements.... 58
Figure 3-18: SWD write and read AC timing diagram.... 58
Figure 3-19: Push Pull mode master SDR mode timing diagram.... 60
Figure 3-20: Push Pull mode master DDR mode timing diagram.... 61
Figure 3-21: I^3C slave out timing.... 61
Figure 3-22: Open Drain mode timing diagram.... 62
Figure 3-23: Digital microphone PDM interface timing.... 64
Figure 3-24: PCM/TDM audio format with different sync modes.... 65
Figure 3-25: PCM/TDM timing diagram.... 66

Qualcomm
Confidential - May contain Trade Secrets
2026-02-27 02:29:50 GMT
hyungchul.won@lge.com

Figure 3-26: XO timing parameters..... 67
Figure 3-27: Sleep-clock timing parameters..... 67
Figure 3-28: JTAG interface timing diagram..... 68
Figure 3-29: SWD write and read AC timing diagram..... 68
Figure 4-1: MPSP830 outline drawing..... 70
Figure 5-1: Carrier tape drawing with part orientation..... 76
Figure 5-2: Tape handling..... 77
Figure 5-3: Matrix-tray key attributes and dimensions..... 77

Qualcomm
Confidential - May Contain Trade Secrets
2026-02-27 02:29:50 GMT
hyungchul.won@lge.com

1 Introduction

See the Revision history for details on the changes included in this revision.

1.1 Functional block diagram

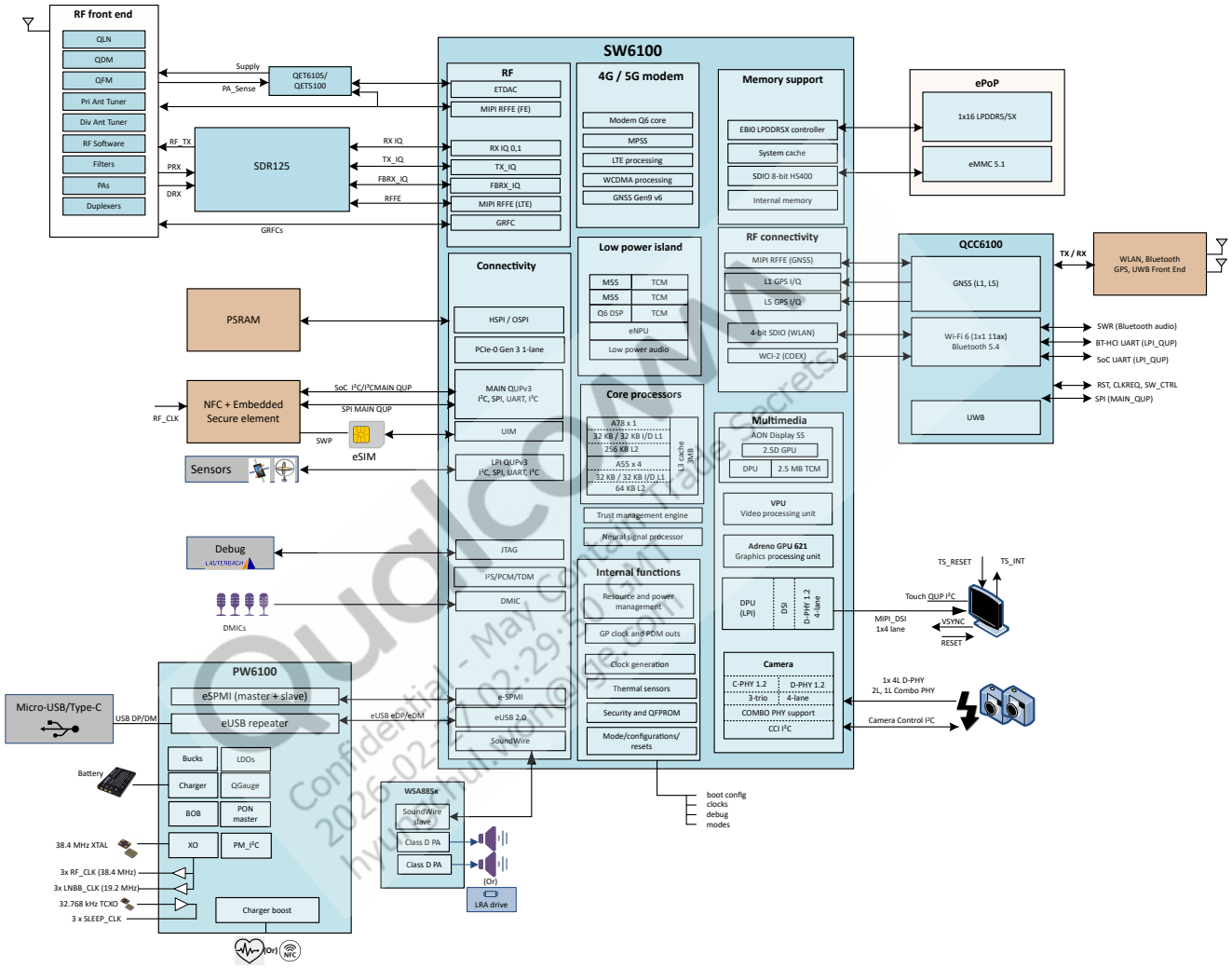

Figure 1-1 SW6100-2 functional block diagram and example application

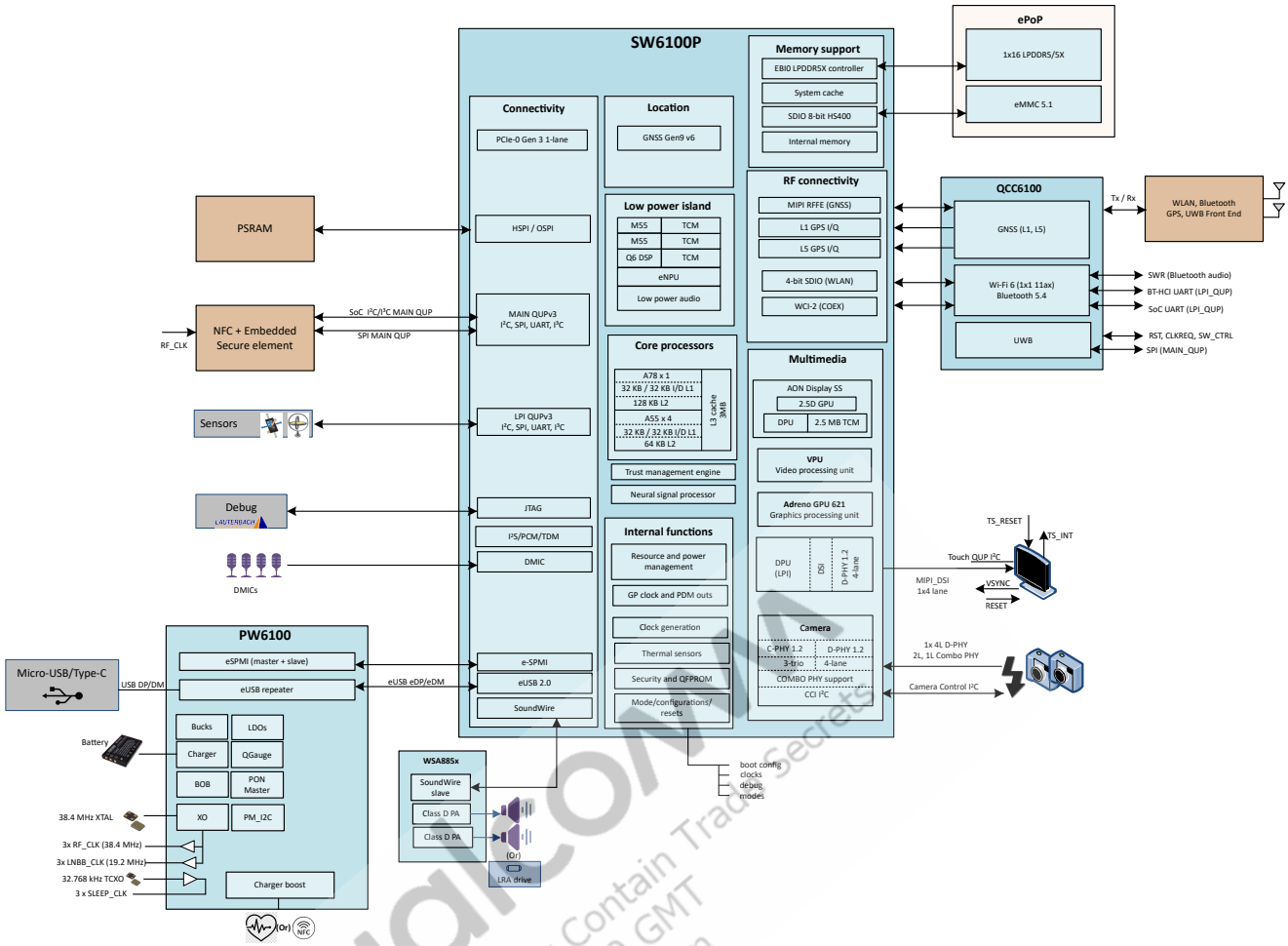

Figure 1-2 SW6100P-2 functional block diagram and example application

1.2 Device variants

The following table summarizes the SW6100-2/SW6100P-2 device variants.

Table 1-1 SW6100-2/SW6100P-2 device variants

Device	SKU	Modem	Connectivity	AI core	Satellite	Camera	Peripherals
SW6100-2	AD	5G RedCap/4G/3G	Wi-Fi/BT/GNSS/UWB	WearAI	NB-NTN	No camera	No PCIe
SW6100-2	AE	4G/3G	WIFI/BT/GNSS	No WearAI	NB-NTN	No camera	No PCIe
SW6100P-2	AD	No modem	WIFI/BT/GNSS/UWB	WearAI	No NB-NTN	No camera	No PCIe
SW6100P-2	AE	No modem	WIFI/BT/GNSS	No WearAI	No NB-NTN	No camera	No PCIe

Qualcomm Confidential May Contain Trade Secrets 2026-02-27 02:09:50 GMT hyungchul.won@lge.com

1.3 SW6100-2/SW6100P-2 features

Table 1-2 SW6100-2/SW6100P-2 features

Feature	SW6100-2/SW6100P-2 capability
Processors	
Applications	64-bit applications processor ▪ Single Arm Cortex-A78 applications processor up to 2.1 GHz, with 256 kB L2 cache ▪ Quad Core Arm Cortex-A55 applications processor up to 1.95 GHz, with 64 kB L2 dedicated cache per core ▪ 3 MB of shared L3 cache between all the cores
Supported OS	Android, Wear OS
Always-on system	Always-on subsystem with modem power management unit
Co-processor	
Low-power audio island and sensors	▪ Q6 V79 digital signal processor (DSP) ▪ Wear microcontroller (WM) and ambient mode microcontroller (AM) subsystem each equipped with Arm Cortex-M55 low power ▪ Dual-embedded neural processing units (e-NPU) for high-performance and always-on neural network (NN) use cases ▪ Low-power audio island (LPAI) to handle audio use cases ▪ Snapdragon sensor core (SSC) for low power sensor use cases
Memory support	
EBI	▪ Package on package (PoP) ▪ 1 × 16-bit LPDDR5/5X with 3200/4266 MHz up to 4 GB ▪ 128 kB LLC dedicated for DARE, MACH9
eMMC	eMMC 5.1 up to 64 GB
PSRAM	OSPI/HSPI with 266 MHz DDR
RF support	
RF operating bands	▪ Defined by the RF transceiver SDR125 ▪ 5G NR sub-6 (FR1) SA and multimode 4G LTE
CA support	Not supported
3GPP release	3GPP Rel. 17 with 5G reduced capability (RedCap) support
GRFC and RFFE interfaces	13 GRFC and 7 RFFE interfaces
WLAN	▪ IEEE 802.11a/b/g/n/ac/ax [a] ▪ Tri-band 2 GHz/5 GHz/6 GHz [a] ▪ 1 × 1 2.4 GHz/5 GHz/6 GHz 20/40 MHz with 11ac [a] ▪ 1 × 1 2.4 GHz/5 GHz/6 GHz 20 MHz with 11ax [a]
Bluetooth	▪ Compliant with Bluetooth v5.4 support [a] ▪ SoundWire (SWR) interface for bluetooth low energy (BLE) audio [a]
UWB	▪ 1Tx + 1Rx configuration[a]
GNSS	▪ Concurrent support for L1 and L5 bands [a] ▪ Dedicated I/Q interfaces for communication [a]

Qualcomm Confidential – May Contain Trade Secrets 2026-02-27 02:39:50 GMT hwangchul.kwon@lge.com

Table 1-2 SW6100-2/SW6100P-2 features (cont.)

Feature	SW6100-2/SW6100P-2 capability
Multimedia	
Display support	
Mobile display processor	Adreno DPU 1122
MIPI DSI	1 × DSI 4 lanes (D-PHY 1.2)
General display features	▪ 720 × 720 60 fps, 4-layers ▪ Supports UBWC4
Wear display sub-system (WDSS)	▪ Display control processor (DCP) with 2.25 MB TCM [b] ▪ 2.5D GPU with 3.75 MB TCM
Camera support	
Camera interfaces	13MP + 13MP (dual), 25 MP (single) with 1080p60
MIPI CSI	▪ 1 × CSI D-PHY with 4-lane (1.2)/C-PHY (1.2) with 3-Trio ▪ Supports combo-mode (C-PHY + D-PHY) on the same port
Video applications performance	
Encode	AR50LT 1080p60e
Decode	AR50LT 1080p60d
Concurrency	Supports concurrent 1080p60e + 1080p60d
Graphics performance	
Graphics	Adreno A621 GPU with: ▪ 701 MHz nominal ▪ 843 MHz turbo ▪ 3D graphics accelerator with 64-bit addressing
Audio	
Codec/Amplifier	Through WSA885x attach
Attaches	▪ PW6100: Only PMIC, no amplifier/haptics
Voice UI	▪ Support for 2 voice activation engines ▪ Supports always-on noise suppression
Low-power voice activation	Supported
Audio interfaces	▪ 3 × MI^{2}S interface with 2-data lanes each ▪ 3 × DMIC interface with CLK, DATA ▪ 2 × 2-lane SWR (SoundWire) for the dual WSA amplifiers ▪ 1 × 2-lane SWR (SoundWire) for QCC6100 BLE audio ▪ 1 × 6-lane SWR (3-Tx, 1-Rx, CLK, DATA) Some features may not be simultaneously available due to multiplexing. For more information, see the *SW6100/SW6100P Pin Assignment and GPIO Specification Spreadsheet* (80-83950-1A)
Voice codec	Fluence AI, 32 kHz EVS, Stereo-MIC, Speaker protection alert
Voice processing	Qualcomm® Noise and Echo Cancellation and Qualcomm® Voice Suite
Audio codec support	High resolution 192 kHz audio, AAC family (HE-AAC, HEAAC v2), WMA family (WMA and WMA Pro+)
Enhanced audio	DSP-offload for low-power audio playback

Qualcomm Confidential - May Contain Trade Secrets 2026-02-27 02:29:59 GMT hyungchul.kim@lge.com

Table 1-2 SW6100-2/SW6100P-2 features (cont.)

Feature	SW6100-2/SW6100P-2 capability
Connectivity	
Qualcomm universal peripheral (QUP) ports	▪ 11 serial engines on TLMM Main QUP ▪ 14 serial engines on LPASS QUP
CCI I²C	2 dedicated I²C interfaces for the camera: ▪ CCI0_I2C: 1.2 V only ▪ CCI1_I2C: 1.2 V/1.8 V
UIM	1 × 1.8 V UIM interface (supports eSIM and Class-C nano-SIM)
eUSB2	Embedded USB2 (eUSB2) standard support with repeater integrated inside PW6100 attach
PWM	10 GPIOs support PWM functionality
Secure digital interfaces	▪ 1 × 8-bit 1.8 V only SD 3.0 for eMMC 5.1 over PoP ▪ 1 × 4-bit 1.2 V only SD 3.0 for interface with QCC6100 for WLAN (multiplexed with GPIO)
Touchscreen support	Capacitive panels via external IC (I²C and interrupts)
PCIe	1 × PCIe Gen3, 1-Lane
PSRAM	For PSRAM support, 266 MHz DDR over OSPI/HSPI
Configurable GPIOs	
Number of GPIO ports	▪ 150 overall with 13 (LPASS), 44 (SSC) ▪ Some features may not be simultaneously available due to multiplexing. For more information, see the *SW6100/SW6100P Pin Assignment and GPIO Specification Spreadsheet*
Top-level mode multiplexer	Provides a convenient way to program groups of GPIOs
Internal functions	
Security	TME 2.2, ICE 4.0, LCP-DARE, QTEE5.x, QRNG, QFPROM
PLLs and clocks	▪ Multiple clock regimes; watchdog and sleep timers input: 19.2 MHz CXO ▪ General-purpose outputs
Debug	JTAG, embedded USB debug (EUD), and ETM
Others	Thermal sensors, modes and resets, and peripheral subsystem
Fabrication technology and package	
PoP, thermally efficient package	8.0 mm × 13.0 mm × 0.48 mm package-on-package (PoP)

[a] Provided through QCC6100 chip attach.
[b] For always-ON (AON) use cases.

Qualcomm Confidential – May Contain Trade Secrets 2026-02-23 02:25:50 GMT hyungchul.wen@lge.com

2 Pin definitions

2.1 I/O parameter definitions

Table 2-1 I/O description (pin type) parameters

Symbol	Description
Pin attribute	
AI	Analog input (does not include pin circuitry)
AO	Analog output (does not include pin circuitry)
B	Bidirectional digital with CMOS input
DI	Digital input (CMOS)
DO	Digital output (CMOS)
H	High-voltage tolerant
S	Schmitt trigger input
Z	High-impedance (Hi-Z) output
Pin pull details for digital I/Os	
nppdpukp	Programmable pull resistor. The default pull direction is indicated using capital letters, and is a prefix to other programmable options: ▪ NP: pdpukp = default no-pull, with programmable options following the colon (:) ▪ PD: nppukp = default pull-down, with programmable options following the colon (:) ▪ PU: nppdkp = default pull-up, with programmable options following the colon (:) ▪ KP: nppdpu = default keeper, with programmable options following the colon (:)
KP	Contains an internal weak keeper device (keepers cannot drive external buses)
NP	Contains no internal pull
PU	Contains an internal pull-up device
PD	Contains an internal pull-down device
Pin-voltage groupings for baseband circuits	
PX0	Pin group 0 (Deep sleep, Reset, SPMI)
PX1	Pin group 1 (DDR RESET)
PX3	Pin group 3 (Reset Out)
PX11	Pin group 11 (CXO)
PX14	Pin group 14 (PS_HOLD, Sleep clock, some GPIOs)
PX701	Pin group (I/O pad) 701: 1.2 V/1.8 V
PX702	Pin group (I/O pad) 702: 1.2 V/1.8 V
PX703	Pin group (I/O pad) 703: 1.2 V/1.8 V
PX704	Pin group (I/O pad) 704: 1.2 V/1.8 V
PX705	Pin group (I/O pad) 705: 1.2 V/1.8 V
PX706	Pin group (I/O pad) 706: 1.2 V/1.8 V
PX707	Pin group (I/O pad) 707: 1.2 V/1.8 V
PX709	Pin group (I/O pad) 709: 1.2 V/1.8 V

Qualcomm Confidential - May Contain Trade Secrets 2026-02-27 02:26:50 GMT hyunchul.won@lge.com

Table 2-1 I/O description (pin type) parameters (cont.)

Symbol	Description
PX711	Pin group (I/O pad) 711: 1.2 V/1.8 V
PX712	Pin group (I/O pad) 712: 1.2 V/1.8 V
PX714	Pin group (I/O pad) 714: 1.2 V/1.8 V
PX715	Pin group (I/O pad) 715: 1.2 V/1.8 V

Qualcomm
Confidential - May Contain Trade Secrets
2026-02-27 02:29:50 GMT
hyungchul.won@lge.com

2.2 Pin assignments – bottom

2.2.1 Pin map – bottom

The SW6100-2/SW6100P-2 is available in the MPSP830. Its bottom surface is equivalent to a MPSP830 that includes several ground pins for electrical grounding, mechanical strength, and thermal continuity. See Mechanical information for package details and Pin assignments – top for information about the top pin assignments.

A high-level view of the bottom pin assignments is shown in Figure 2-1.

The text within Figure 2-1 is difficult to read when viewing an 8½ inch × 11 inch hard copy. Other viewing options are available:

- Print that one page on an 11 inch × 17 inch sheet.
- View the graphic's PDF soft copy and zoom in — the resolution is sufficient for comfortable reading.
- Download the *SW6100 Pin Assignment/GPIO Configuration Spreadsheet (80-83950-1A)*. This Microsoft Excel spreadsheet lists all SW6100 pin numbers, pin names, pin voltages, pin types, and functional descriptions.

NOTE Click the following link to download the pin assignment and GPIO configuration spreadsheet.

SW6100/SW6100P Pin Assignment and GPIO Configuration Specification Spreadsheet (80-83950-1A).

After successfully logging in, the document is downloaded. Make this document a favorite to be notified of any changes.

Qualcomm Confidential - May Contain Trade Secrets 2026-02-27 02:29:50 GMT hyungchul.won@lge.com

	1	2	3	4	5	6	7	8	9	10	11	12	13	14	15	16	17	18	19	20	21	22	23
A	GND	GND	GND	GND	GND	GND	GND	GND	GND	GND	GND	GND	GND	GND	GND	GND	GND	GND	GND	GND	GND	GND	GND
B	GND	GND	GND	GND	GND	GND	GND	GND	GND	GND	GND	GND	GND	GND	GND	GND	GND	GND	GND	GND	GND	GND	GND
C	GND	GND	GND	GND	GND	GND	GND	GND	GND	GND	GND	GND	GND	GND	GND	GND	GND	GND	GND	GND	GND	GND	GND
D	GND	GND	GND	GND	GND	GND	GND	GND	GND	GND	GND	GND	GND	GND	GND	GND	GND	GND	GND	GND	GND	GND	GND
E	GND	GPIO_123	GPIO_15	GPIO_14	GPIO_72	GPIO_86	GPIO_82	DNC	DNC	GND	GND	GND	GND	GND	GND	VSSA_BBRX_FBRX	BBRX1_I_P	GND	VCCI_EMMC	GND	VCCQ_EMMC	VCC_EMMC	GND
F	GPIO_121	GPIO_124	GPIO_102	GPIO_40	GPIO_97	GPIO_84	GPIO_80	RESOUT_N	GND	GNSS_L5_I	GND	TXDAC_Q_M	GND	TXDAC_I_P	GND	BBRX0_Q_P	BBRX1_I_M	GND	GND	GPIO_49	GPIO_54	GPIO_59	GPIO_56
G	GPIO_111	GPIO_122		GPIO_96	GND	GPIO_85	GPIO_81	GPIO_83	GND	GNSS_L5_Q	GND	TXDAC_Q_P	GND	TXDAC_I_M	GND	BBRX0_Q_M	GND	GND	FBRX_I	GND	GPIO_55	GPIO_58	GPIO_57
H	GPIO_116	GPIO_112	GPIO_98	GPIO_94	GPIO_44	GPIO_43	SLEEP_CLK	GND	GND	GNSS_L1_Q	GND	GND	GND	TXDAC_REF	BBRX0_I_P	GND	BBRX1_Q_P	GND	FBRX_Q	GND	GPIO_61	GND	GPIO_63
J	GPIO_115	GPIO_99	GPIO_95	GPIO_41	GPIO_42	GPIO_117	GPIO_78	MODE_1	GND	GNSS_L1_I	GND	ETDAC_P	ETDAC_M	GND	BBRX0_I_M	GND	BBRX1_Q_M	GND	GND	GPIO_50	GPIO_60	GPIO_67	GPIO_62
K	GPIO_106	GND	GPIO_126	GPIO_100	GPIO_118	GPIO_29	GPIO_149	MODE_0	GND	GND	GND	GND	GND	GND	GND	VDD_AL_BBRX	VDD_AL_FBRX	GND	GPIO_51	GPIO_52	GPIO_66	GPIO_64	GPIO_65
L	GPIO_114	GPIO_105	GPIO_125	GPIO_101	GPIO_28	GND	VDD_LPI_CX	VDD_PX701	PS_HOLD		VDD_A_GNSS_ADC	VDD_MX_A_TXDAC_ETDAC						VDD_GFX	GND	GPIO_53	GPIO_147	GPIO_45	GPIO_46
M	REFGEN_ATB0	GPIO_104	GPIO_103	VDD_PX703	VDD_PX14_A	GND	VDD_LPI_CX	VDD_LPI_MX_0	VDD_PX3	VDD_LPI_CX	GND	VDD_MX_A	VDD_AH_TXDAC_ETDAC	GND		VDD_GFX	GND	VDD_GFX	GND	GPIO_47	GPIO_48	GPIO_148	GPIO_16
N	REFGEN_REXT0	GPIO_107	GPIO_109	GPIO_119	VDD_LPI_CX	GND	VDD_LPI_CX	VDD_LPI_MX_0	GND	VDD_LPI_CX	GND	VDD_MX_A	VDD_CX	GND	VDD_MX_C	VDD_GFX	GND	VDD_GFX	VDD_PX705	GPIO_19	GPIO_17	GPIO_18	GND
P	GND	GND	GPIO_113	GPIO_110	GPIO_120	VDD_PX704	VDD_LPI_CX	VDD_LPI_MX_0	GND	VDD_LPI_CX	GND	VDD_MX_A	VDD_CX	GND	VDD_MX_C	VDD_GFX	GND	VDD_GFX	VDD_PX706	GND	GPIO_79	GPIO_68	GPIO_32
R	PCIE0_RX0_P	PCIE0_REFCLK_P	GND	GPIO_108	GPIO_93	GND	VDD_LPI_CX	VDD_LPI_MX_0	GND	VDD_LPI_CX	GND	VDD_MX_A	VDD_CX	GND	VDD_MX_C	VDD_GFX	GND	VDD_GFX	VDD_PX14_B	GPIO_70	GPIO_71	GPIO_69	GPIO_34
T	PCIE0_REFCLK_M	PCIE0_RX0_M	GND	GPIO_92	VDD_IX_A	VDD_PX14_E	VDD_LPI_CX	VDD_LPI_MX_0	GND	VDD_LPI_CX	GND	VDD_MX_A	VDD_CX	GND	VDD_MX_C	VDD_CX	GND	VDD_QFPROM	VDD_IX_B	GPIO_33	GPIO_38	GPIO_35	GPIO_37
U	LPDDR5_VDD2H	GND	GPIO_90	GPIO_91	VDD_PX702	PLL_TEST_SE	GND	VDD_LPI_MX_0	GND	VDD_LPI_CX	GND	VDD_MX_A	VDD_CX	GND	VDD_MX_C	VDD_CX	GND	SPMI0_CLK	VDD_PX709	JTAG_TCK	JTAG_TDI	GPIO_39	GPIO_36
V	PCIE0_TX0_M	PCIE0_TX0_P	GND	GND	VDD_PX11	CXO	VDD_A_REFGEN_0_P875_0	VDD_LPI_MX_0	GND	VDD_LPI_CX	GND	VDD_MX_A	VDD_CX	GND	VDD_MX_C	VDD_CX	SPMI0_DATA		GND	JTAG_TRST_N	JTAG_TMS	JTAG_TDO	JTAG_SRST_N
W	LPDDR5_VDD2L	GND	EUSB0_EDM	EUSB0_EDP		VDD_A_PCIE_0_0P9	VDD_A_REFGEN_1_P2_0	VDD_LPI_MX_0		VDD_LPI_CX	GND	VDD_MX_A	VDD_CX	GND	VDD_MX_C	GND	VDD_PX0_B	GND	VDD_PX707	REFGEN_ATB1	GND	REFGEN_REXT1	GND
Y	DSI0_LN3_P	DSI0_LN3_M	GND	VDD_ADSI_0_0P9		VDD_A_EUSB_0_0P9	GND	VDD_LPI_MX_0	GND	VDD_LPI_CX	GND	VDD_MX_A	VDD_CX	GND	VDD_MX_C	GND	VDD_LPI_MX_1		VDD_PX711	GND	CSI0_A0_CLK_M	CSI0_NC_CLK_P	LPDDR5_VDD2L
AA	GND	DSI0_LN2_M	DSI0_LN2_P	GND	VDD_ADSI_0_PLL_0P9	VDD_A_PCIE_0_1P2	VDD_A_EUSB_0_1P2	VDD_LPI_MX_0	GND	VDD_LPI_CX	GND	VDD_MX_A	VDD_CX	GND	VDD_MX_C	GND	VDD_A_REFGEN_1_P2_1		VDD_A_REFGEN_0_P875_1	CSI0_B0_LN0_P	CSI0_C0_LN0_M	GND	LPDDR5_VDD2H
AB	DSI0_CLK_P	DSI0_CLK_M	DSI0_LN0_P	DSI0_LN0_M	GND	VDD_ADSI_0_1P2	GND	VDD_LPI_MX_0	GND	VDD_CX	GND	VDD_MX_A	VDD_CX	GND		GND	VDD_NSP			GND	CSI0_A1_LN1_P	CSI0_B1_LN1_M	GND
AC	GND	DSI0_LN1_M	DSI0_LN1_P	VDD_IX_D	VDD_PX715	GND	VDD_APC0	VDD_APC0	GND	VDD_CX	GND	VDD_MX_A	VDD_CX	GND	VDD_MX_C	GND	VDD_NSP	VDD_ACSI_0_0P9	VDD_ACSI_0_1P2	CSI0_C1_LN2_P	CSI0_A2_LN2_M	GND	LPDDR5_VDD1
AD	LPDDR5_VDD1	GPIO_146	GND	GPIO_145		VDD_MX_C	VDD_APC0	GND	VDD_CX	GND	VDD_MX_A	VDD_CX	GND	VDD_MX_C	GND	VDD_NSP	VDD_NSP	VDD_PX14_C	GND	CSI0_C2_LN3_M	CSI0_B2_LN3_P	GND	
AE	LPDDR5_VDDQ	GPIO_144	GPIO_143	VDD_PX14_D	VDD_APC0	GND	VDD_MX_C	VDD_APC0	GND	VDD_CX	GND	VDD_MX_A	VDD_CX	GND	VDD_MX_C	GND	VDD_NSP	GND	VDD_PX712	GPIO_20	GPIO_21	GPIO_22	LPDDR5_VDDQ
AF	GND	GPIO_141	GPIO_142	VDD_PX714	VDD_APC0	GND	VDD_MX_C	VDD_APC0			GND	VDD_MX_A	GND	VDD_NSP	VDD_MX_C	GND	VDD_NSP	GND	VDD_IX_C	GPIO_23	GPIO_1	GPIO_0	GND
AG	GND	GPIO_140	GPIO_138	VDD_PX0_A	VDD_APC0	GND	VDD_MX_C	VDD_APC1	GND	VDD_APC1	VDD_A_EBI_0	VDD_A_EBI_0	GND	VDD_A_EBI_0	VDD_A_EBI_0	GND	VDD_NSP	GND	VDD_NSP	GPIO_4	GPIO_6	GPIO_2	GND
AH	GND	GPIO_139	GPIO_136	VDD_PX1_A	VDD_APC0	GND	VDD_MX_C	VDD_APC1	GND	VDD_APC1	GND	VDD_A_EBI_0_PLL_0P9	VDD_D_EBI_0	GND	GND	GND	VDD_NSP	GND	VDD_NSP	GPIO_5	GPIO_8	GPIO_3	GND
AJ	GND	GPIO_137	GPIO_135	GPIO_130	VDD_APC0	GND	VDD_MX_C	VDD_APC1	GND	GND	VDD_IO_EBI_0	VDD_IO_EBI_0	VDD_IO_EBI_0	VDD_IO_EBI_0	GND	GND	VDD_NSP	GPIO_87	GPIO_76	GPIO_11	GPIO_10	GPIO_7	GND
AK	GND	GPIO_134	GPIO_133	GPIO_127	VDD_APC0	VDD_MX_C	GND	VDD_MX_C	VDD_APC1	GND	GND	VDD_IO_EBI_0	VDD_A_EBI_0	VDD_PX1_B	GND	VDD_MX_C	VDD_NSP	GPIO_77	GPIO_31	GPIO_9	GPIO_25	GPIO_24	GND
AL	GND	GPIO_132	GPIO_129	DS_EN	GND	GND	GND	GND	GND	GND	GND	VDD_IO_EBI_0	VDD_A_EBI_0	GND	GND	GND	GND	GPIO_89	GPIO_74	GPIO_27	GPIO_30	GPIO_26	GND
AM	GND	GPIO_131	GPIO_128	RESIN_N	VDD_APC0	VDD_MX_C	GND	VDD_MX_C	VDD_APC1	GND	GND	GND	GND	GND	GND	VDD_MX_C	VDD_NSP	GPIO_88	GPIO_75	GPIO_73	GPIO_12	GPIO_13	ZQ0
AN	GND	GND	LPDDR5_VDD2H	LPDDR5_VDD1	GND	LPDDR5_VDDQ	GND	GND	GND	LPDDR5_VDD2H	DNC	LPDDR5_VDD2L	EBI0_CAL	LPDDR5_VDD2H	GND	GND	GND	LPDDR5_VDDQ	GND	GND	LPDDR5_VDD1	LPDDR5_VDD2H	GND
AP	GND	GND	GND	GND	GND	GND	GND	GND	GND	GND	GND	GND	GND	GND	GND	GND	GND	GND	GND	GND	GND	GND	GND
AR	GND	GND	GND	GND	GND	GND	GND	GND	GND	GND	GND	GND	GND	GND	GND	GND	GND	GND	GND	GND	GND	GND	GND
AT	GND	GND	GND	GND	GND	GND	GND	GND	GND	GND	GND	GND	GND	GND	GND	GND	GND	GND	GND	GND	GND	GND	GND
AU	GND	GND	GND	GND	GND	GND	GND	GND	GND	GND	GND	GND	GND	GND	GND	GND	GND	GND	GND	GND	GND	GND	GND

Net Legend

- PWR
- GND
- PCIE
- USB
- CSI
- DSI
- DNC
- Other

Qualcomm
Confidential – May Contain Trade Secrets
2025-09-27 02:29:50 GMT
hyungchul.won@ute.com

Figure 2-1 SW6100-2/SW6100P-2 bottom pin assignments

2.2.2 Pin descriptions – bottom

The pins are described in Table 2-2 to Table 2-4.

Table 2-2 SW6100-2/SW6100P-2 bottom pin descriptions – General pins

Pin no.	Pin name	Pin characteristics		Functional description
		Voltage	Type	
J15	BBRX0_I_M	–	AI, AO	Baseband receiver input, channel 0, in-phase – minus
H15	BBRX0_I_P	–	AI, AO	Baseband receiver input, channel 0, in-phase – plus
G16	BBRX0_Q_M	–	AI, AO	Baseband receiver input, channel 0, quadrature-phase – minus
F16	BBRX0_Q_P	–	AI, AO	Baseband receiver input, channel 0, quadrature-phase – plus
F17	BBRX1_I_M	–	AI, AO	Baseband receiver input, channel 1, in-phase – minus
E17	BBRX1_I_P	–	AI, AO	Baseband receiver input, channel 1, in-phase – plus
J17	BBRX1_Q_M	–	AI, AO	Baseband receiver input, channel 1, quadrature-phase – minus
H17	BBRX1_Q_P	–	AI, AO	Baseband receiver input, channel 1, quadrature-phase – plus
Y21	CSI0_A0_CLK_M	CSI	AI	MIPI CSI 0 (DPHY), differential clock – minus MIPI CSI 0 (CPHY), trio lane 0 – A
AB21	CSI0_A1_LN1_P	CSI	AI	MIPI CSI 0 (DPHY), differential lane 1 – plus MIPI CSI 0 (CPHY), trio lane 1 – A
AC21	CSI0_A2_LN2_M	CSI	AI	MIPI CSI 0 (DPHY), differential lane 2 – minus MIPI CSI 0 (CPHY), trio lane 2 – A
AA20	CSI0_B0_LN0_P	CSI	AI	MIPI CSI 0 (DPHY), differential lane 0 – plus MIPI CSI 0 (CPHY), trio lane 0 – B
AB22	CSI0_B1_LN1_M	CSI	AI	MIPI CSI 0 (DPHY), differential lane 1 – minus MIPI CSI 0 (CPHY), trio lane 1 – B
AD22	CSI0_B2_LN3_P	CSI	AI	MIPI CSI 0 (DPHY), differential lane 3 – plus MIPI CSI 0 (CPHY), trio lane 2 – B
AA21	CSI0_C0_LN0_M	CSI	AI	MIPI CSI 0 (DPHY), differential lane 0 – minus MIPI CSI 0 (CPHY), trio lane 0 – C
AC20	CSI0_C1_LN2_P	CSI	AI	MIPI CSI 0 (DPHY), differential lane 2 – plus MIPI CSI 0 (CPHY), trio lane 1 – C
AD21	CSI0_C2_LN3_M	CSI	AI	MIPI CSI 0 (DPHY), differential lane 3 – minus MIPI CSI 0 (CPHY), trio lane 2 – C
Y22	CSI0_NC_CLK_P	CSI	AI	MIPI CSI 0 (D-PHY), differential clock – positive MIPI CSI 0 (CPHY), no connect
V6	CXO	PX11	DI	19.2 MHz clock input. (sourced from PMIC)
AL4	DS_EN	PX_0	DI, PD	PMIC sleep status from PMIC to SoC Active-high input 1: PMIC is in deep sleep mode 0: PMIC in active mode
AB2	DSI0_CLK_M	DSI	AO	MIPI DSI 0 (DPHY), differential lane clock – minus
AB1	DSI0_CLK_P	DSI	AO	MIPI DSI 0 (DPHY), differential lane clock – plus

Qualcomm Confidential - May Contain Trade Secrets 2026-02-27 02:29:50 GMT hyungchul.won@lge.com

Table 2-2 SW6100-2/SW6100P-2 bottom pin descriptions – General pins (cont.)

Pin no.	Pin name	Pin characteristics		Functional description
		Voltage	Type	
AB4	DSI0_LN0_M	DSI	AO	MIPI DSI 0 (DPHY), differential lane 0 – minus
AB3	DSI0_LN0_P	DSI	AO	MIPI DSI 0 (DPHY), differential lane 0 – plus
AC2	DSI0_LN1_M	DSI	AO	MIPI DSI 0 (DPHY), differential lane 1 – minus
AC3	DSI0_LN1_P	DSI	AO	MIPI DSI 0 (DPHY), differential lane 1 – plus
AA2	DSI0_LN2_M	DSI	AO	MIPI DSI 0 (DPHY), differential lane 2 – minus
AA3	DSI0_LN2_P	DSI	AO	MIPI DSI 0 (DPHY), differential lane 2 – plus
Y2	DSI0_LN3_M	DSI	AO	MIPI DSI 0 (DPHY), differential lane 3 – minus
Y1	DSI0_LN3_P	DSI	AO	MIPI DSI 0 (DPHY), differential lane 3 – plus
AN13	EBI0_CAL	VDDQ_LPDDR5	AI	LPDDR calibration pad for external resistor connection
J13	ETDAC_M	–	AI, AO	Envelope tracker DAC pin – minus
J12	ETDAC_P	–	AI, AO	Envelope tracker DAC pin – plus
W3	EUSB0_EDM	–	AI, AO	Embedded USB2 port – minus
W4	EUSB0_EDP	–	AI, AO	Embedded USB2 port – plus
G19	FBRX_I	–	AI, AO	Tx transmit feedback receiver baseband in-phase output
H19	FBRX_Q	–	AI, AO	Tx transmit feedback receiver baseband quadrature output
J10	GNSS_L1_I	–	AI	GNSS receiver baseband input, in-phase for L1 band
H10	GNSS_L1_Q	–	AI	GNSS receiver baseband input, quadrature for L1 band
F10	GNSS_L5_I	–	AI	GNSS receiver baseband input, in-phase for L5 band
G10	GNSS_L5_Q	–	AI	GNSS receiver baseband input, quadrature for L5 band
V23	JTAG_SRST_N	PX14	DI, PU	JTAG reset for debug
U20	JTAG_TCK	PX14	DI, PU	JTAG clock input
U21	JTAG_TDI	PX14	DI, PU: nppdkp	JTAG data input
V22	JTAG_TDO	PX14	DO–Z	JTAG data output
V21	JTAG_TMS	PX14	DI, PU: nppdkp	JTAG mode select input
V20	JTAG_TRST_N	PX14	DI, PU: nppdkp	JTAG reset
K8	MODE_0	PX14	DI, PD: nppukp	Mode control bit 0
J8	MODE_1	PX14	DI, PD: nppukp	Mode control bit 1
T1	PCIE0_REFCLK_M	–	AI, AO	PCIe0 Gen 3 reference clock – negative
R2	PCIE0_REFCLK_P	–	AI, AO	PCIe0 Gen 3 reference clock – positive
T2	PCIE0_RX0_M	–	AI, AO	PCIe0 Gen 3 receive – negative
R1	PCIE0_RX0_P	–	AI, AO	PCIe0 Gen 3 receive – positive
V1	PCIE0_TX0_M	–	AI, AO	PCIe0 Gen 3 transmit – negative
V2	PCIE0_TX0_P	–	AI, AO	PCIe0 Gen 3 transmit – positive

Qualcomm Confidential - May Contain Trade Secrets 2025-02-27 02:22:50 GMT hyungchul.wonde@qc.com

Table 2-2 SW6100-2/SW6100P-2 bottom pin descriptions – General pins (cont.)

Pin no.	Pin name	Pin characteristics		Functional description
		Voltage	Type	
L9	PS_HOLD	PX14	DO	SoC boot status and power supply hold output from SoC to PMIC. Active-high pin with internal weak PD. 1: Successful SoC boot, PMIC to hold the power supplies. 0: PMIC to reset or shutdown the power supplies.
N1	REFGEN_REXT0	–	AI, AO	External calibration resistor for the reference PHY 0
W22	REFGEN_REXT1	–	AI, AO	External calibration resistor for the reference PHY 1
AM4	RESIN_N	PX0	DI	Hardware reset input to SoC (driven by PMIC) Active: Low input 0: SoC in reset state 1: SoC in active state
F8	RESOUT_N	PX3	DO	Reset output pin from SOC to external circuitry. Active-Low output pin, follows RESIN_N pin This signal is asserted or de-asserted a few clock cycles after a change on RESIN_N or after a watchdog expiration 0: SoC asserting a reset to peripheral devices 1: SoC deasserting reset to peripheral devices
H7	SLEEP_CLK	PX14	DI	32.768 kHz sleep clock input (sourced from PMIC)
U18	SPMI0_CLK	PX0	B, PD: nppukp	SPMI interface CLK
V17	SPMI0_DATA	PX0	B, PD: nppukp	SPMI interface DATA
G14	TXDAC_I_M	–	AI, AO	TXDAC in-phase – minus
F14	TXDAC_I_P	–	AI, AO	TXDAC in-phase – plus
F12	TXDAC_Q_M	–	AI, AO	TXDAC quadrature – minus
G12	TXDAC_Q_P	–	AI, AO	TXDAC quadrature – plus
H14	TXDAC_REF	–	AI	Reference voltage for TXDAC circuits
AM23	ZQ0	VDDQ_LPDDR5	AI	Pin for ZQ0 calibration

NOTE GPIO pins can support multiple functions. To assign GPIOs to particular functions (such as the options listed in the preceding table), designers must identify all their application's requirements and map each GPIO to its function carefully avoiding conflicts in GPIO assignments. For detailed information about GPIO multiplexing, see *SW6100/SW6100P Pin Assignment and GPIO Configuration Specification Spreadsheet (80-83950-1A)*.

NOTE Device designers must examine each GPIO's external connection and programmed configuration, and take steps necessary to avoid excessive leakage current. Combinations of the following factors must be controlled properly:

- GPIO configuration
  - Input vs. output
  - Pull-up or pull-down

Qualcomm Confidential - May Contain Trade Secrets 2026-02-27 02:29:24 GMT hyungchul.wonglge.com

- External connections
  - Unused inputs
  - Connections to high-impedance (tri-state) outputs
  - Connections to external devices that may not be attached

Qualcomm
Confidential - May Contain Trade Secrets
2026-02-27 02:29:50 GMT
hyungchul.won@lge.com

Table 2-3 SW6100-2/SW6100P-2 bottom pin descriptions – General-purpose input/output ports

Pin no.	Pin name	Wakeup function	Pin characteristics		Functional description		
			Voltage	Type	General purpose	SSC	LPASS
AF22	GPIO_0	Yes	PX14	PD: nppukp	Configurable GPIO 0	–	–
AF21	GPIO_1	–	PX14	PD: nppukp	Configurable GPIO 1	–	–
AG22	GPIO_2	–	PX14	PD: nppukp	Configurable GPIO 2	–	–
AH22	GPIO_3	Yes	PX14	PD: nppukp	Configurable GPIO 3	–	–
AG20	GPIO_4	Yes	PX14	PD: nppukp	Configurable GPIO 4	–	–
AH20	GPIO_5	No	PX14	PD: nppukp	Configurable GPIO 5	–	–
AG21	GPIO_6	–	PX14	PD: nppukp	Configurable GPIO 6	–	–
AJ22	GPIO_7	Yes	PX14	PD: nppukp	Configurable GPIO 7	–	–
AH21	GPIO_8	Yes	PX14	PD: nppukp	Configurable GPIO 8	–	–
AK20	GPIO_9	–	PX14	PD: nppukp	Configurable GPIO 9	–	–
AJ21	GPIO_10	–	PX14	PD: nppukp	Configurable GPIO 10	–	–
AJ20	GPIO_11	Yes	PX14	PD: nppukp	Configurable GPIO 11	–	–
AM21	GPIO_12	–	PX712	PD: nppukp	Configurable GPIO 12	–	–
AM22	GPIO_13	Yes	PX712	PD: nppukp	Configurable GPIO 13	–	–
E4	GPIO_14	Yes	PX703	PD: nppukp	Configurable GPIO 14	–	–
E3	GPIO_15	Yes	PX703	PD: nppukp	Configurable GPIO 15	–	–
M23	GPIO_16	Yes	PX14	PD: nppukp	Configurable GPIO 16	–	–
N21	GPIO_17	–	PX14	PD: nppukp	Configurable GPIO 17	–	–
N22	GPIO_18	Yes	PX14	PD: nppukp	Configurable GPIO 18	–	–
N20	GPIO_19	Yes	PX14	PD: nppukp	Configurable GPIO 19	–	–
AE20	GPIO_20	Yes	PX14	PD: nppukp	Configurable GPIO 20	–	–
AE21	GPIO_21	–	PX14	PD: nppukp	Configurable GPIO 21	–	–
AE22	GPIO_22	–	PX14	PD: nppukp	Configurable GPIO 22	–	–
AF20	GPIO_23	Yes	PX14	PD: nppukp	Configurable GPIO 23	–	–
AK22	GPIO_24	Yes	PX712	PD: nppukp	Configurable GPIO 24	–	–
AK21	GPIO_25	Yes	PX712	PD: nppukp	Configurable GPIO 25	–	–
AL22	GPIO_26	–	PX712	PD: nppukp	Configurable GPIO 26	–	–

Qualcomm Confidential - May Contain Trade Secrets 2026-03-27 02:25:50 GMT hyungchul.wonne@gmail.com

Table 2-3 SW6100-2/SW6100P-2 bottom pin descriptions – General-purpose input/output ports (cont.)

Pin no.	Pin name	Wakeup function	Pin characteristics		Functional description		
			Voltage	Type	General purpose	SSC	LPASS
AL20	GPIO_27	Yes	PX712	PD: nppukp	Configurable GPIO 27	–	–
L5	GPIO_28	Yes	PX14	PD: nppukp	Configurable GPIO 28	SSC_30	–
K6	GPIO_29	–	PX14	PD: nppukp	Configurable GPIO 29	SSC_31	–
AL21	GPIO_30	Yes	PX712	PD: nppukp	Configurable GPIO 30	–	–
AK19	GPIO_31	Yes	PX712	PD: nppukp	Configurable GPIO 31	–	–
P23	GPIO_32	Yes	PX14	PD: nppukp	Configurable GPIO 32	–	–
T20	GPIO_33	Yes	PX711	PD: nppukp	Configurable GPIO 33	–	–
R23	GPIO_34	Yes	PX14	PD: nppukp	Configurable GPIO 34	–	–
T22	GPIO_35	Yes	PX711	PD: nppukp	Configurable GPIO 35	–	–
U23	GPIO_36	Yes	PX14	PD: nppukp	Configurable GPIO 36	–	–
T23	GPIO_37	Yes	PX14	PD: nppukp	Configurable GPIO 37	–	–
T21	GPIO_38	Yes	PX711	PU: nppdkp	Configurable GPIO 38	–	–
U22	GPIO_39	Yes	PX711	PD: nppukp	Configurable GPIO 39	–	–
F4	GPIO_40	Yes	PX703	PD: nppukp	Configurable GPIO 40	SSC_25	–
J4	GPIO_41	Yes	PX14	PD: nppukp	Configurable GPIO 41	–	–
J5	GPIO_42	Yes	PX14	PD: nppukp	Configurable GPIO 42	–	–
H6	GPIO_43	–	PX14	PD: nppukp	Configurable GPIO 43	–	–
H5	GPIO_44	–	PX14	PD: nppukp	Configurable GPIO 44	–	–
L22	GPIO_45	Yes	PX14	PD: nppukp	Configurable GPIO 45	–	–
L23	GPIO_46	–	PX14	PD: nppukp	Configurable GPIO 46	–	–
M20	GPIO_47	Yes	PX14	PD: nppukp	Configurable GPIO 47	–	–
M21	GPIO_48	Yes	PX14	PD: nppukp	Configurable GPIO 48	–	–
F20	GPIO_49	Yes	PX707	PD: nppukp	Configurable GPIO 49	–	–
J20	GPIO_50	–	PX707	PD: nppukp	Configurable GPIO 50	–	–
K19	GPIO_51	Yes	PX707	PD: nppukp	Configurable GPIO 51	–	–
K20	GPIO_52	Yes	PX707	PD: nppukp	Configurable GPIO 52	–	–
L20	GPIO_53	Yes	PX707	PD: nppukp	Configurable GPIO 53	–	–

Qualcomm Confidential - May Contain Trade Secrets 2026-03-27 02:25:50 GMT hyungchul.wonne@gmail.com

Table 2-3 SW6100-2/SW6100P-2 bottom pin descriptions – General-purpose input/output ports (cont.)

Pin no.	Pin name	Wakeup function	Pin characteristics		Functional description		
			Voltage	Type	General purpose	SSC	LPASS
F21	GPIO_54	–	PX14	PD: nppukp	Configurable GPIO 54	–	–
G21	GPIO_55	Yes	PX14	PD: nppukp	Configurable GPIO 55	–	–
F23	GPIO_56	Yes	PX14	PD: nppukp	Configurable GPIO 56	–	–
G23	GPIO_57	–	PX14	PD: nppukp	Configurable GPIO 57	–	–
G22	GPIO_58	Yes	PX14	PD: nppukp	Configurable GPIO 58	–	–
F22	GPIO_59	–	PX14	PD: nppukp	Configurable GPIO 59	–	–
J21	GPIO_60	Yes	PX14	PD: nppukp	Configurable GPIO 60	–	–
H21	GPIO_61	–	PX14	PD: nppukp	Configurable GPIO 61	–	–
J23	GPIO_62	Yes	PX705	PD: nppukp	Configurable GPIO 62	–	–
H23	GPIO_63	–	PX705	PD: nppukp	Configurable GPIO 63	–	–
K22	GPIO_64	Yes	PX706	PD: nppukp	Configurable GPIO 64	–	–
K23	GPIO_65	–	PX706	PD: nppukp	Configurable GPIO 65	–	–
K21	GPIO_66	Yes	PX706	PD: nppukp	Configurable GPIO 66	–	–
J22	GPIO_67	–	PX706	PD: nppukp	Configurable GPIO 67	–	–
P22	GPIO_68	–	PX709	PD: nppukp	Configurable GPIO 68	–	–
R22	GPIO_69	Yes	PX709	PD: nppukp	Configurable GPIO 69	–	–
R20	GPIO_70	–	PX709	PD: nppukp	Configurable GPIO 70	–	–
R21	GPIO_71	–	PX709	PD: nppukp	Configurable GPIO 71	–	–
E5	GPIO_72	–	PX703	PD: nppukp	Configurable GPIO 72	SSC_24	–
AM20	GPIO_73	–	PX14	PD: nppukp	Configurable GPIO 73	–	–
AL19	GPIO_74	Yes	PX14	PD: nppukp	Configurable GPIO 74	–	–
AM19	GPIO_75	Yes	PX14	PD: nppukp	Configurable GPIO 75	–	–
AJ19	GPIO_76	Yes	PX14	PD: nppukp	Configurable GPIO 76	–	–
AK18	GPIO_77	–	PX14	PD: nppukp	Configurable GPIO 77	–	–
J7	GPIO_78	Yes	PX14	PD: nppukp	Configurable GPIO 78	SSC_43	–
P21	GPIO_79	Yes	PX14	PD: nppukp	Configurable GPIO 79	–	–
F7	GPIO_80	Yes	PX14	PD: nppukp	Configurable GPIO 80	–	–

Qualcomm Confidential - May Contain Trade Secrets 2026-03-27 02:25:50 GMT hyunghul.wonne@gmail.com

Table 2-3 SW6100-2/SW6100P-2 bottom pin descriptions – General-purpose input/output ports (cont.)

Pin no.	Pin name	Wakeup function	Pin characteristics		Functional description		
			Voltage	Type	General purpose	SSC	LPASS
G7	GPIO_81	Yes	PX14	PU: nppdkp	Configurable GPIO 81	–	–
E7	GPIO_82	Yes	PX14	PD: nppukp	Configurable GPIO 82	–	–
G8	GPIO_83	–	PX14	PD: nppukp	Configurable GPIO 83	–	–
F6	GPIO_84	Yes	PX14	PD: nppukp	Configurable GPIO 84	–	–
G6	GPIO_85	–	PX14	PD: nppukp	Configurable GPIO 85	–	–
E6	GPIO_86	Yes	PX14	PD: nppukp	Configurable GPIO 86	–	–
AJ18	GPIO_87	–	PX14	PD: nppukp	Configurable GPIO 87	–	–
AM18	GPIO_88	–	PX14	PD: nppukp	Configurable GPIO 88	–	–
AL18	GPIO_89	Yes	PX14	PD: nppukp	Configurable GPIO 89	–	–
U3	GPIO_90	–	PX14	PD: nppukp	Configurable GPIO 90	–	LPASS_0
U4	GPIO_91	Yes	PX14	PD: nppukp	Configurable GPIO 91	–	LPASS_1
T4	GPIO_92	–	PX14	PD: nppukp	Configurable GPIO 92	–	LPASS_2
R5	GPIO_93	Yes	PX14	PD: nppukp	Configurable GPIO 93	–	LPASS_3
H4	GPIO_94	–	PX701	PD: nppukp	Configurable GPIO 94	–	LPASS_4
J3	GPIO_95	Yes	PX701	PD: nppukp	Configurable GPIO 95	–	LPASS_5
G4	GPIO_96	–	PX701	PD: nppukp	Configurable GPIO 96	–	LPASS_6
F5	GPIO_97	–	PX701	PD: nppukp	Configurable GPIO 97	–	LPASS_7
H3	GPIO_98	Yes	PX701	PD: nppukp	Configurable GPIO 98	–	LPASS_8
J2	GPIO_99	Yes	PX701	PD: nppukp	Configurable GPIO 99	–	LPASS_9
K4	GPIO_100	–	PX14	PD: nppukp	Configurable GPIO 100	–	LPASS_10
L4	GPIO_101	Yes	PX14	PD: nppukp	Configurable GPIO 101	–	LPASS_11
F3	GPIO_102	Yes	PX703	PD: nppukp	Configurable GPIO 102	SSC_42	–
M3	GPIO_103	Yes	PX702	PD: nppukp	Configurable GPIO 103	SSC_0	–
M2	GPIO_104	–	PX702	PD: nppukp	Configurable GPIO 104	SSC_1	–
L2	GPIO_105	Yes	PX702	PD: nppukp	Configurable GPIO 105	SSC_2	–
K1	GPIO_106	–	PX702	PD: nppukp	Configurable GPIO 106	SSC_3	–
N2	GPIO_107	Yes	PX14	PD: nppukp	Configurable GPIO 107	SSC_4	–

Qualcomm Confidential - May Contain Trade Secrets 2025-03-27 02:25:50 GMT hyungchul.wonne@gmail.com

Table 2-3 SW6100-2/SW6100P-2 bottom pin descriptions – General-purpose input/output ports (cont.)

Pin no.	Pin name	Wakeup function	Pin characteristics		Functional description		
			Voltage	Type	General purpose	SSC	LPASS
R4	GPIO_108	–	PX14	PD: nppukp	Configurable GPIO 108	SSC_5	–
N3	GPIO_109	–	PX14	PD: nppukp	Configurable GPIO 109	SSC_6	–
P4	GPIO_110	Yes	PX14	PD: nppukp	Configurable GPIO 110	SSC_7	–
G1	GPIO_111	Yes	PX704	PD: nppukp	Configurable GPIO 111	SSC_8	–
H2	GPIO_112	–	PX704	PD: nppukp	Configurable GPIO 112	SSC_9	–
P3	GPIO_113	Yes	PX702	PD: nppukp	Configurable GPIO 113	SSC_10	–
L1	GPIO_114	Yes	PX702	PD: nppukp	Configurable GPIO 114	SSC_11	–
J1	GPIO_115	–	PX702	PD: nppukp	Configurable GPIO 115	SSC_12	–
H1	GPIO_116	Yes	PX702	PD: nppukp	Configurable GPIO 116	SSC_13	–
J6	GPIO_117	Yes	PX14	PD: nppukp	Configurable GPIO 117	SSC_14	–
K5	GPIO_118	Yes	PX14	PD: nppukp	Configurable GPIO 118	SSC_15	–
N4	GPIO_119	Yes	PX14	PD: nppukp	Configurable GPIO 119	SSC_16	–
P5	GPIO_120	Yes	PX14	PD: nppukp	Configurable GPIO 120	SSC_17	–
F1	GPIO_121	Yes	PX703	PD: nppukp	Configurable GPIO 121	SSC_18	–
G2	GPIO_122	Yes	PX703	PD: nppukp	Configurable GPIO 122	SSC_19	–
E2	GPIO_123	Yes	PX703	PD: nppukp	Configurable GPIO 123	SSC_20	–
F2	GPIO_124	–	PX703	PD: nppukp	Configurable GPIO 124	SSC_21	–
L3	GPIO_125	Yes	PX14	PD: nppukp	Configurable GPIO 125	SSC_22	–
K3	GPIO_126	–	PX14	PD: nppukp	Configurable GPIO 126	SSC_23	–
AK4	GPIO_127	Yes	PX714	PD: nppukp	Configurable GPIO 127	SSC_32	–
AM3	GPIO_128	–	PX714	PD: nppukp	Configurable GPIO 128	SSC_33	–
AL3	GPIO_129	–	PX714	PD: nppukp	Configurable GPIO 129	SSC_34	–
AJ4	GPIO_130	Yes	PX714	PD: nppukp	Configurable GPIO 130	SSC_35	–
AM2	GPIO_131	Yes	PX714	PD: nppukp	Configurable GPIO 131	SSC_29	–
AL2	GPIO_132	–	PX714	PD: nppukp	Configurable GPIO 132	SSC_28	–
AK3	GPIO_133	–	PX714	PD: nppukp	Configurable GPIO 133	SSC_27	–
AK2	GPIO_134	Yes	PX715	PD: nppukp	Configurable GPIO 134	SSC_26	–

Qualcomm Confidential - May Contain Trade Secrets 2025-03-27 02:25:50 GMT hyungchul.wonne@gmail.com

Table 2-3 SW6100-2/SW6100P-2 bottom pin descriptions – General-purpose input/output ports (cont.)

Pin no.	Pin name	Wakeup function	Pin characteristics		Functional description		
			Voltage	Type	General purpose	SSC	LPASS
AJ3	GPIO_135	Yes	PX715	PD: nppukp	Configurable GPIO 135	SSC_37	–
AH3	GPIO_136	Yes	PX715	PD: nppukp	Configurable GPIO 136	–	–
AJ2	GPIO_137	Yes	PX715	PD: nppukp	Configurable GPIO 137	–	–
AG3	GPIO_138	Yes	PX715	PD: nppukp	Configurable GPIO 138	–	–
AH2	GPIO_139	Yes	PX715	PD: nppukp	Configurable GPIO 139	SSC_38	–
AG2	GPIO_140	Yes	PX715	PD: nppukp	Configurable GPIO 140	SSC_39	–
AF2	GPIO_141	Yes	PX715	PD: nppukp	Configurable GPIO 141	SSC_40	–
AF3	GPIO_142	Yes	PX715	PD: nppukp	Configurable GPIO 142	SSC_41	–
AE3	GPIO_143	–	PX715	PD: nppukp	Configurable GPIO 143	–	–
AE2	GPIO_144	–	PX715	PD: nppukp	Configurable GPIO 144	–	–
AD4	GPIO_145	Yes	PX715	PD: nppukp	Configurable GPIO 145	SSC_36	–
AD2	GPIO_146	–	PX715	PD: nppukp	Configurable GPIO 146	–	–
L21	GPIO_147	–	PX707	PD: nppukp	Configurable GPIO 147	–	–
M22	GPIO_148	–	PX14	PD: nppukp	Configurable GPIO 148	–	–
K7	GPIO_149	–	PX14	PD: nppukp	Configurable GPIO 149	–	LPASS_12

NOTE For detailed information about GPIO multiplexing, see *SW6100/SW6100P Pin Assignment and GPIO Configuration Specification Spreadsheet (80-83950-1A)*.

Qualcomm Confidential - May Contain Trade Secrets 2026-02-27 02:25:50 GMT hyungchul.won@lge.com

Table 2-4 SW6100-2/SW6100P-2 bottom pin descriptions – DNC, ground, and power-supply pins

Pin no.	Pin name	Functional description
E22	VCC_EMMC	Power for eMMC – control
E19	VCCI_EMMC	Power for eMMC – core I/O
E21	VCCQ_EMMC	Power for memory I/O
L11	VDD_A_GNSS_ADC_0P9	Power for the GPS ADC circuits – 0.9 V
AC18	VDD_A_CSI_0_0P9	Power for the camera serial interface (CSI) – 0.9 V circuits
AC19	VDD_A_CSI_0_1P2	Power for the camera serial interface (CSI) – 1.2 V circuits
Y4	VDD_A_DSI_0_0P9	Power for the display serial interface (DSI) – 0.9 V circuits
AB6	VDD_A_DSI_0_1P2	Power for the display serial interface (DSI) – 1.2 V circuits
AA5	VDD_A_DSI_0_PLL_0P9	Power for the PLL circuits of display interface
AG11, AG12, AG14, AG15, AK13, AL13	VDD_A_EBI_0	Power for EBI circuits (DDR memory controller of SoC)
AH12	VDD_A_EBI_0_PLL_0P9	Power for EBI PLL in DDR memory controller of SoC
Y6	VDD_A_EUSB_0_0P9	Power for EUSB2 core circuitry
AA7	VDD_A_EUSB_0_1P2	Power for EUSB2 1.2 V circuitry
W6	VDD_A_PCIE_0_0P9	Power for internal 0.9 V PCIe controller circuitry
AA6	VDD_A_PCIE_0_1P2	Power for internal 1.2 V PCIe controller circuitry
V7	VDD_A_REFGEN_0P875_0	Reference voltage for the circuitry to transmit clocks across the SoC – 0.875 V
AA19	VDD_A_REFGEN_0P875_1	Reference voltage for the circuitry to transmit clocks across the SoC – 0.875 V
W7	VDD_A_REFGEN_1P2_0	Reference voltage for the circuitry to transmit clocks across the SoC – 1.2 V
AA17	VDD_A_REFGEN_1P2_1	Reference voltage for the circuitry to transmit clocks across the SoC – 1.2 V
K16	VDD_AL_BBRX	Power for analog circuits: Low voltage for BBRX
K17	VDD_AL_FBRX	Power for analog circuits: Low voltage for FBRX
AE5, AE8, AF5, AF8, AG5, AH5, AJ5, AK5, AM5, AC7, AC8, AD8	VDD_APC0	Power for the application processor – Arm Cortex-A55
AG10, AG8, AH10, AH8, AJ8, AK9, AM9	VDD_APC1	Power for the application processor – single Arm Cortex-A78
AE10, AE13, N13, P13, R13, T13, T16, U13, U16, V13, V16, W13, Y13, AA13, AB10, AB13, AC10, AC13, AD10, AD13	VDD_CX	Power for SoC core logic domain
L7, M10, M7, N10, N5, N7, P10, P7, R10, R7, T10, T7, U10, V10, W10, Y10, AA10	VDD_LPI_CX	Sensor and LPASS island logic domain core power supply
AH13	VDD_D_EBI_0	Power for EBI circuits digital core (DDR memory controller of SoC)

Qualcomm Confidential - May Contain Trade Secrets 2026-02-27 02:29:50 GMT hyungchul.wonelde.com

Table 2-4 SW6100-2/SW6100P-2 bottom pin descriptions – DNC, ground, and power-supply pins (cont.)

Pin no.	Pin name	Functional description
L18, M16, M18, N16, N18, P16, P18, R16, R18	VDD_GFX	Power for graphical processing unit
AJ11, AJ12, AJ13, AJ14, AK12, AL12	VDD_IO_EBI_0	Power for the EBI I/O circuits
T5, T19, AF19, AC4	VDD_IX	Power for intermediate circuits
AE12, AF12, M12, N12, P12, R12, T12, U12, V12, W12, Y12, AA12, AB12, AC12, AD12	VDD_MX_A	Power rail for always ON memory
AE15, AE7, AF15, AF7, AG7, AH7, AJ7, AK16, AK6, AK8, AM16, AM6, AM8, N15, P15, R15, T15, U15, V15, W15, Y15, AA15, AC15, AD15, AD7	VDD_MX_C	Collapsible memory power rail for GPU/ Camera/Video/APC/Modem
M8, N8, P8, R8, T8, U8, V8, W8, Y8, AA8, AB8, Y17	VDD_LPI_MX	Power for sensor and LPASS island memory domain
L12	VDD_MX_A_TXDAC_ETDAC	Power for circuits related to envelope tracker DAC and TXDAC of RF – memory domain
AE17, AF14, AF17, AG17, AG19, AH17, AH19, AJ17, AK17, AM17, AB17, AC17, AD17, AD18	VDD_NSP	Power for the internal neural signal processor
AG4, W17	VDD_PX0	Special pads for the RESET IN, deep sleep and SPMI
AH4, AK14	VDD_PX1	Power for the pad group 1: DDR controller RESET circuitry
M9	VDD_PX3	Power for the pad group 3: SDIO RESETs
V5	VDD_PX11	Power for the pad group 11: CXO pads
M5, R19, AD19, AE4, T6	VDD_PX14	Power for the pad group 14: 1.2 V GPIOs, JTAG, PS_HOLD, SLEEP_CLK
L8	VDD_PX701	Power for the pad group 701: 1.2 V/1.8 V dual pads
U5	VDD_PX702	Power for the pad group 702: 1.2 V/1.8 V dual pads
M4	VDD_PX703	Power for the pad group 703: 1.2 V/1.8 V dual pads
P6	VDD_PX704	Power for the pad group 704: 1.2 V/1.8 V dual pads
N19	VDD_PX705	Power for the pad group 705: 1.2 V/1.8 V dual pads
P19	VDD_PX706	Power for the pad group 706: 1.2 V/1.8 V dual pads
W19	VDD_PX707	Power for the pad group 707: 1.2 V/1.8 V dual pads
U19	VDD_PX709	Power for the pad group 709: 1.2 V/1.8 V dual pads
Y19	VDD_PX711	Power for the pad group 711: 1.2 V/1.8 V dual pads
AE19	VDD_PX712	Power for the pad group 712: 1.2 V/1.8 V dual pads
AF4	VDD_PX714	Power for the pad group 714: 1.2 V/1.8 V dual pads

Qualcomm Confidential – May Contain Trade Secrets 2026-02-27 02:09:50 GMT hyungchul.yun@lge.com

Table 2-4 SW6100-2/SW6100P-2 bottom pin descriptions – DNC, ground, and power-supply pins (cont.)

Pin no.	Pin name	Functional description
AC5	VDD_PX715	Power for the pad group 715: 1.2 V/1.8 V dual pads
T18	VDD_QFPROM	Power for programming the internal QFPROM
M13	VDD_AH_TXDAC_ETDAC	Power for circuits related to envelope tracker DAC and TXDAC of RF – core domain
AN21, AN4, AC23, AD1	LPDDR5_VDD1	Power for DDR memory core – 1.8 V
AN10, AN14, AN22, AN3, U1, AA23	LPDDR5_VDD2H	Power for VDD2H (high voltage) rail for LPDDR5X memory controller
AN12, W1, Y23	LPDDR5_VDD2L	Power for VDD2H (low voltage) rail for LPDDR5X memory controller
AE1, AE23, AN18, AN6	LPDDR5_VDDQ	Power for memory I/O

Qualcomm
Confidential - May Contain Trade Secrets
2026-02-27 02:29:50 GMT
hyungchul.won@lge.com

Table 2-4 SW6100-2/SW6100P-2 bottom pin descriptions – DNC, ground, and power-supply pins (cont.)

Pin no.	Pin name	Functional description
E8, E9, AN11, M1, U6, W20	DNC	Do not connect
A1, A2, A3, A4, A5, A6, A7, A8, A9, A10, A11, A12, A13, A14, A15, A16, A17, A18, A19, A20, A21, A22, A23, B1, B2, B3, B4, B5, B6, B7, B8, B9, B10, B11, B12, B13, B14, B15, B16, B17, B18, B19, B20, B21, B22, B23, C1, C2, C3, C4, C5, C6, C7, C8, C9, C10, C11, C12, C13, C14, C15, C16, C17, C18, C19, C20, C21, C22, C23, D1, D2, D3, D4, D5, D6, D7, D8, D9, D10, D11, D12, D13, D14, D15, D16, D17, D18, D19, D20, D21, D22, D23, E1, E10, E11, E12, E13, E14, E15, E16, E18, E20, E23, AE6, AE9, AE11, AE14, AE16, AE18, AF1, AF6, AF11, AF13, AF16, AF18, AF23, AG1, AG6, AG9, AG13, AG16, AG18, AG23, AH1, AH6, AH9, AH11, AH14, AH15, AH16, AH18, AH23, AJ1, AJ6, AJ9, AJ10, AJ15, AJ16, AJ23, AK1, AK7, AK10, AK11, AK15, AK23, AL1, AL5, AL6, AL7, AL8, AL9, AL10, AL11, AL14, AL15, AL16, AL17, AL23, AM1, AM7, AM10, AM11, AM12, AM13, AM14, AM15, AN1, AN2, AN5, AN7, AN8, AN9, AN15, AN16, AN17, AN19, AN20, AN23, F9, F11, F13, F15, F18, F19, G5, G9, G11, G13, G15, G17, G18, G20, H8, H9, H11, H12, H13, H16, H18, H20, H22, J9, J11, J14, J16, J18, J19, K2, K9, K10, K11, K12, K13, K14, K15, K18, L6, L19, M6, M11, M14, M17, M19, N6, N9, N11, N14, N17, N23, P1, P2, P9, P11, P14, P17, P20, R3, R6, R9, R11, R14, R17, T3, T9, T11, T14, T17, U2, U7, U9, U11, U14, U17, V3, V4, V9, V11, V14, V19, W2, W11, W14, W16, W18, W21, W23, Y3, Y7, Y9, Y11, Y14, Y16, Y20, AA1, AA4, AA9, AA11, AA14, AA16, AA22, AB5, AB7, AB9, AB11, AB14, AB16, AB20, AB23, AC1, AC6, AC9, AC11, AC14, AC16, AC22, AD3, AD9, AD11, AD14, AD16, AD20, AD23, AP1, AP2, AP3, AP4, AP5, AP6, AP7, AP8, AP9, AP10, AP11, AP12, AP13, AP14, AP15, AP16, AP17, AP18, AP19, AP20, AP21, AP22, AP23, AR1, AR2, AR3, AR4, AR5, AR6, AR7, AR8, AR9, AR10, AR11, AR12, AR13, AR14, AR15, AR16, AR17, AR18, AR19, AR20, AR21, AR22, AR23, AT1, AT2, AT3, AT4, AT5, AT6, AT7, AT8, AT9, AT10, AT11, AT12, AT13, AT14, AT15, AT16, AT17, AT18, AT19, AT20, AT21, AT22, AT23, AU1, AU2, AU3, AU4, AU5, AU6, AU7, AU8, AU9, AU10, AU11, AU12, AU13, AU14, AU15, AU16, AU17, AU18, AU19, AU20, AU21, AU22, AU23	GND	SoC GND bottom

Qualcomm Confidential - May Contain Trade Secrets 2026-02-27 02:29:50 GMT yungchul.won@lge.com

2.3 Pin assignments – top

2.3.1 Pin map – top

A high-level view of the top pin assignments is shown in the following figure. The text within the following figure is difficult to read when viewing an 8½ inch × 11 inch hard copy. Other viewing options are available and defined in Pin map – bottom.

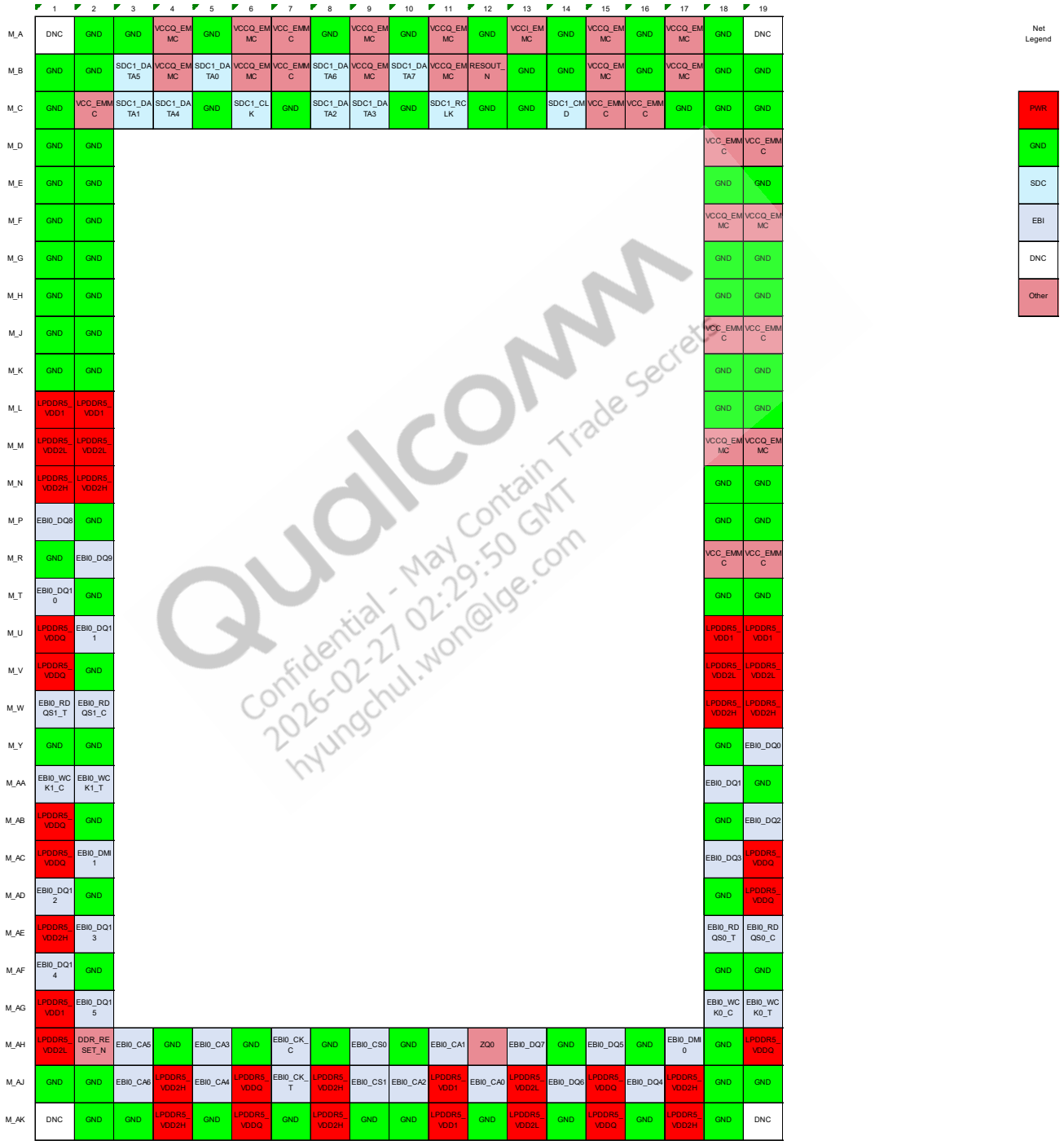

Figure 2-2 SW6100-2/SW6100P-2 top pin assignments

2.3.2 Pin descriptions – top

The top pins are described in Table 2-5 and Table 2-6.

Table 2-5 SW6100-2/SW6100P-2 top pin descriptions – General pins

Pin no.	Pin name	Pin characteristics		Functional description
		Voltage	Type	
M_B12	RESOUT_N	PX3	DO	Reset output from SoC for eMMC
M_C6	SDC1_CLK	PX3	DO, NP: pdpukp	eMMC secure digital controller clock
M_C14	SDC1_CMD	PX3	B, NP: pdpukp	eMMC secure digital controller command
M_B5	SDC1_DATA0	PX3	B, NP: pdpukp	eMMC secure digital controller data bit 0
M_C3	SDC1_DATA1	PX3	B, NP: pdpukp	eMMC secure digital controller data bit 1
M_C8	SDC1_DATA2	PX3	B, NP: pdpukp	eMMC secure digital controller data bit 2
M_C9	SDC1_DATA3	PX3	B, NP: pdpukp	eMMC secure digital controller data bit 3
M_C4	SDC1_DATA4	PX3	B, NP: pdpukp	eMMC secure digital controller data bit 4
M_B3	SDC1_DATA5	PX3	B, NP: pdpukp	eMMC secure digital controller data bit 5
M_B8	SDC1_DATA6	PX3	B, NP: pdpukp	eMMC secure digital controller data bit 6
M_B10	SDC1_DATA7	PX3	B, NP: pdpukp	eMMC secure digital controller data bit 7
M_C11	SDC1_RCLK	PX3	DI, NP: pdpukp	eMMC secure digital controller return clock
M_AH2	DDR_RESET_N	PX1	DO, PU	LPDDR5 reset
M_AJ12	EBI0_CA0	EBI	DO	EBI0 LPDDR5 command/address bit 0
M_AH11	EBI0_CA1	EBI	DO	EBI0 LPDDR5 command/address bit 1
M_AJ10	EBI0_CA2	EBI	DO	EBI0 LPDDR5 command/address bit 2
M_AH5	EBI0_CA3	EBI	DO	EBI0 LPDDR5 command/address bit 3
M_AJ5	EBI0_CA4	EBI	DO	EBI0 LPDDR5 command/address bit 4
M_AH3	EBI0_CA5	EBI	DO	EBI0 LPDDR5 command/address bit 5
M_AJ3	EBI0_CA6	EBI	DO	EBI0 LPDDR5 command/address bit 6
M_AH7	EBI0_CK_C	EBI	DO	EBI0 LPDDR5 differential clock (C)
M_AJ7	EBI0_CK_T	EBI	DO	EBI0 LPDDR5 differential clock (T)
M_AH9	EBI0_CS0	EBI	DO	EBI0 LPDDR5 chip – select 0
M_AJ9	EBI0_CS1	EBI	DO	EBI0 LPDDR5 chip – select 1
M_AH17	EBI0_DMI0	EBI	DO	EBI0 LPDDR5 data mask for byte 0
M_AC2	EBI0_DMI1	EBI	DO	EBI0 LPDDR5 data mask for byte 1
M_Y19	EBI0_DQ0	EBI	B	EBI0 LPDDR5 data bit 0
M_AA18	EBI0_DQ1	EBI	B	EBI0 LPDDR5 data bit 1
M_T1	EBI0_DQ10	EBI	B	EBI0 LPDDR5 data bit 10
M_U2	EBI0_DQ11	EBI	B	EBI0 LPDDR5 data bit 11
M_AD1	EBI0_DQ12	EBI	B	EBI0 LPDDR5 data bit 12
M_AE2	EBI0_DQ13	EBI	B	EBI0 LPDDR5 data bit 13
M_AF1	EBI0_DQ14	EBI	B	EBI0 LPDDR5 data bit 14
M_AG2	EBI0_DQ15	EBI	B	EBI0 LPDDR5 data bit 15

Qualcomm Confidential - May Contain Trade Secrets 2026-02-27 02:29:50 GMT hyungchul.wonedge.com

Table 2-5 SW6100-2/SW6100P-2 top pin descriptions – General pins (cont.)

Pin no.	Pin name	Pin characteristics		Functional description
		Voltage	Type	
M_AB19	EBI0_DQ2	EBI	B	EBI0 LPDDR5 data bit 2
M_AC18	EBI0_DQ3	EBI	B	EBI0 LPDDR5 data bit 3
M_AJ16	EBI0_DQ4	EBI	B	EBI0 LPDDR5 data bit 4
M_AH15	EBI0_DQ5	EBI	B	EBI0 LPDDR5 data bit 5
M_AJ14	EBI0_DQ6	EBI	B	EBI0 LPDDR5 data bit 6
M_AH13	EBI0_DQ7	EBI	B	EBI0 LPDDR5 data bit 7
M_P1	EBI0_DQ8	EBI	B	EBI0 LPDDR5 data bit 8
M_R2	EBI0_DQ9	EBI	B	EBI0 LPDDR5 data bit 9
M_AE19	EBI0_RDQS0_C	EBI	DI	EBI0 LPDDR5 differential read data strobe for byte 0 (C)
M_AE18	EBI0_RDQS0_T	EBI	B	EBI0 LPDDR5 differential read data strobe for byte 0 (T)
M_W2	EBI0_RDQS1_C	EBI	DI	EBI0 LPDDR5 differential read data strobe for byte 1 (C)
M_W1	EBI0_RDQS1_T	EBI	B	EBI0 LPDDR5 differential read data strobe for byte 1 (T)
M_AG19	EBI0_WCK0_C	EBI	DO	EBI0 LPDDR5 differential data clock for byte 0 (C)
M_AG18	EBI0_WCK0_T	EBI	DO	EBI0 LPDDR5 differential data clock for byte 0 (T)
M_AA2	EBI0_WCK1_C	EBI	DO	EBI0 LPDDR5 differential data clock for byte 1 (C)
M_AA1	EBI0_WCK1_T	EBI	DO	EBI0 LPDDR5 differential data clock for byte 1 (T)
M_AH12	ZQ0	VDDQ_LPDDR5	AI	Pin for ZQ0 calibration

Table 2-6 SW6100-2/SW6100P-2 top pin descriptions – NC, ground, and power-supply pins

Pin no.	Pin name	Functional description
M_AJ11, M_AK11, M_L1, M_L2, M_U18, M_U19, M_AG1	LPDDR5_VDD1	Power for PoP LPDDR5 memory core 1 – VDD1
M_AE1, M_AJ17, M_AJ4, M_AJ8, M_AK17, M_AK4, M_AK8, M_N1, M_N2, M_W18, M_W19	LPDDR5_VDD2H	Power for PoP LPDDR5 memory core 2 – VDD2H (High) – 1.05 V typical
M_AH1, M_AJ13, M_AK13, M_M1, M_M2, M_V18, M_V19	LPDDR5_VDD2L	Power for PoP LPDDR5 memory core 2 – VDD2L (Low) – 0.9 V typical
M_AB1, M_AC1, M_AC19, M_AD19, M_AH19, M_AJ15, M_AJ6, M_AK15, M_AK6, M_U1, M_V1	LPDDR5_VDDQ	Power for PoP LPDDR5 memory IPO power – VDDQ – 0.6 V typical
M_A13	VCCI_EMMC	Power for eMMC – core I/O
M_A11, M_A15, M_A17, M_A4, M_A6, M_A9, M_B11, M_B15, M_B17, M_B4, M_B6, M_B9, M_F18, M_F19, M_M18, M_M19	VCCQ_EMMC	Power for memory I/O
M_A7, M_B7, M_C15, M_C16, M_C2, M_D18, M_D19, M_J18, M_J19, M_R18, M_R19	VCC_EMMC	Power for eMMC – control

Qualcomm Confidential – May Contain Trade Secrets 2026-02-27 02:09:50 GMT sungchul.wan@lge.com

Table 2-6 SW6100-2/SW6100P-2 top pin descriptions – NC, ground, and power-supply pins (cont.)

Pin no.	Pin name	Functional description
M_A1, M_A19, M_AK1, M_AK19	DNC	Do not connect
M_AJ18, M_AJ19, M_AJ2, M_AK10, M_AK12, M_AK14, M_AK16, M_AK18, M_AK2, M_AK3, M_AK5, M_AK7, M_AK9, M_B1, M_B13, M_B14, M_B16, M_B18, M_B19, M_B2, M_C1, M_C10, M_C12, M_C13, M_C17, M_C18, M_C19, M_C5, M_C7, M_D1, M_D2, M_E1, M_E18, M_E19, M_E2, M_F1, M_F2, M_G1, M_G18, M_G19, M_G2, M_H1, M_H18, M_H19, M_H2, M_J1, M_J2, M_K1, M_K18, M_K19, M_K2, M_L18, M_L19, M_N18, M_N19, M_P18, M_P19, M_P2, M_R1, M_T18, M_T19, M_T2, M_V2, M_Y1, M_Y18, M_Y2, M_A10, M_A12, M_A14, M_A16, M_A18, M_A2, M_A3, M_A5, M_A8, M_AA19, M_AB18, M_AB2, M_AD18, M_AD2, M_AF18, M_AF19, M_AF2, M_AH10, M_AH14, M_AH16, M_AH18, M_AH4, M_AH6, M_AH8, M_AJ1	GND	SoC GND top

Qualcomm
Confidential - May Contain Trade Secrets
2026-02-27 02:29:50 GMT
hyungchul.won@lge.com

3 Electrical specifications

3.1 Absolute maximum ratings

The absolute maximum ratings (Table 3-1) reflect the stress levels that, if exceeded, may cause permanent damage to the device. No functionality is guaranteed outside the operating specifications. Functionality and reliability are only guaranteed within the operating conditions described in Operating conditions.

Table 3-1 Absolute maximum ratings

Power supply	Description	Min	Max	Unit
VDD_A_GNSS_ADC_0P9	Power for the GPS ADC circuits – 0.9 V	-0.3	1.01	V
VDD_A_CSI_0_0P9	Power for the camera serial interface (CSI) – 0.9 V circuits	-0.3	1.01	V
VDD_A_CSI_0_1P2	Power for the camera serial interface (CSI) – 1.2 V circuits	-0.3	1.39	V
VDD_A_DSI_0_0P9	Power for the display serial interface (DSI) – 0.9 V circuits	-0.3	1.01	V
VDD_A_DSI_0_1P2	Power for the display serial interface (DSI) – 1.2 V circuits	-0.3	1.39	V
VDD_A_DSI_0_PLL_0P9	Power for the PLL circuits of display interface	-0.3	1.01	V
VDD_A_EBI_0	Power for EBI circuits (DDR memory controller of SoC)	-0.3	1.16	V
VDD_A_EBI_0_PLL_0P9	Power for EBI PLL in DDR memory controller of SoC	-0.3	1.16	V
VDD_A_EUSB_0_0P9	Power for EUSB2 core circuitry	-0.3	1.05	V
VDD_A_EUSB_0_1P2	Power for EUSB2 1.2 V circuitry	-0.3	1.45	V
VDD_A_PCIE_0_0P9	Power for internal 0.9 V PCIe controller circuitry	-0.3	1.02	V
VDD_A_PCIE_0_1P2	Power for internal 1.2 V PCIe controller circuitry	-0.3	1.43	V
VDD_A_REFGEN_0P875_0	Reference voltage for the circuitry to transmit clocks across the SoC – 0.875 V	-0.3	1.02	V
VDD_A_REFGEN_0P875_1	Reference voltage for the circuitry to transmit clocks across the SoC – 0.875 V	-0.3	1.02	V
VDD_A_REFGEN_1P2_0	Reference voltage for the circuitry to transmit clocks across the SoC – 1.2 V	-0.3	1.38	V
VDD_A_REFGEN_1P2_1	Reference voltage for the circuitry to transmit clocks across the SoC – 1.2 V	-0.3	1.38	V
VDD_AL_BBRX	Power for analog circuits: Low voltage for BBRX	-0.3	1.43	V
VDD_AL_FBRX	Power for analog circuits: Low voltage for FBRX	-0.3	1.43	V
VDD_APC0	Power for the application processor – Arm Cortex-A55	-0.3	1.38	V
VDD_APC1	Power for the application processor – single Arm Cortex-A78	-0.3	1.38	V
VDD_CX	Power for SoC core logic domain	-0.3	1.27	V
VDD_LPI_CX	Sensor and LPASS island logic domain core power supply	-0.3	1.16	V
VDD_D_EBI_0	Power for EBI circuits digital core (DDR memory controller of SoC)	-0.3	0.99	V
VDD_GFX	Power for graphical processing unit	-0.3	1.27	V
VDD_IO_EBI_0	Power for the EBI I/O circuits	-0.3	0.63	V
VDD_IX	Power for intermediate circuits	-0.3	1.04	V
VDD_MX_A	Power rail for always ON memory	-0.3	1.16	V
VDD_MX_C	Collapsible memory power rail for GPU/Camera/Video/APC/Modem	-0.3	1.16	V

Qualcomm Confidential - May Contain Trade Secrets 2026-03-27 07:29:57 GMT hyunchulwon@lge.com

Table 3-1 Absolute maximum ratings (cont.)

Power supply	Description	Min	Max	Unit
VDD_LPI_MX	Power for sensor and LPASS island memory domain	-0.3	1.16	V
VDD_MX_A_TXDAC_ETDAC	Power for circuits related to Envelope tracker DAC and TXDAC of RF – memory domain	-0.3	1.16	V
VDD_NSP	Power for the internal neural signal processor	-0.3	1.27	V
VDD_PX0	Special pads for the RESET IN, deep sleep and SPMI	-0.3	1.45	V
VDD_PX1	Power for the pad group 1: DDR controller RESET circuitry	-0.3	1.29	V
VDD_PX3	Power for the pad group 3: SDIO RESETs	-0.3	2.15	V
VDD_PX11	Power for the pad group 11: CXO pads	-0.3	1.45	V
VDD_PX14	Power for the pad group 14: 1.2 V GPIOs, JTAG, PS_HOLD, SLEEP_CLK	-0.3	1.45	V
VDD_PX701	Power for the pad group 701: 1.2 V/1.8 V dual pads	-0.3	1.45	V
		-0.3	2.18	V
VDD_PX702	Power for the pad group 702: 1.2 V/1.8 V dual pads	-0.3	1.45	V
		-0.3	2.18	V
VDD_PX703	Power for the pad group 703: 1.2 V/1.8 V dual pads	-0.3	1.45	V
		-0.3	2.18	V
VDD_PX704	Power for the pad group 704: 1.2 V/1.8 V dual pads	-0.3	1.45	V
		-0.3	2.18	V
VDD_PX705	Power for the pad group 705: 1.2 V/1.8 V dual pads	-0.3	1.45	V
		-0.3	2.18	V
VDD_PX706	Power for the pad group 706: 1.2 V/1.8 V dual pads	-0.3	1.45	V
		-0.3	2.18	V
VDD_PX707	Power for the pad group 707: 1.2 V/1.8 V dual pads	-0.3	1.45	V
		-0.3	2.18	V
VDD_PX709	Power for the pad group 709: 1.2 V/1.8 V dual pads	-0.3	1.45	V
		-0.3	2.18	V
VDD_PX711	Power for the pad group 711: 1.2 V/1.8 V dual pads	-0.3	1.45	V
		-0.3	2.18	V
VDD_PX712	Power for the pad group 712: 1.2 V/1.8 V dual pads	-0.3	1.45	V
		-0.3	2.18	V
VDD_PX714	Power for the pad group 714: 1.2 V/1.8 V dual pads	-0.3	1.45	V
		-0.3	2.18	V
VDD_PX715	Power for the pad group 715: 1.2 V/1.8 V dual pads	-0.3	1.45	V
		-0.3	2.18	V
VDD_QFPROM	Power for programming the internal QFPROM	-0.3	2.15	V
VDD_AH_TXDAC_ETDAC	Power for circuits related to envelope tracker DAC and TXDAC of RF – core domain	-0.3	2.09	V

Qualcomm Confidential – May Contain Trade Secrets 2026-02-27 02:29:50 GMT hyungchul.yon@lge.com

3.2 Operating conditions

Operating conditions include design team-controlled parameters such as power supply voltage, power distribution impedances, and thermal conditions. The SW6100-2/SW6100P-2 meets the performance specifications, when used within the operating conditions, unless otherwise noted in those sections (provided the absolute maximum ratings have never been exceeded).

Customers should keep the thermal mitigation algorithm enabled with **default limits** to ensure that the operating temperature range is kept within the specification.

Table 3-2 Operating conditions for voltage rails

Power supply	Description	Min	Typ	Max	Unit
VDD_A_GNSS_ADC_0P9	Power for the GPS ADC circuits – 0.9 V	0.83	0.875	0.92	V
VDD_A_CSI_0_0P9	Power for the camera serial interface (CSI) – 0.9 V circuits	0.83	0.875	0.92	V
VDD_A_CSI_0_1P2	Power for the camera serial interface (CSI) – 1.2 V circuits	1.14	1.2	1.26	V
VDD_A_DSI_0_0P9	Power for the display serial interface (DSI) – 0.9 V circuits	0.83	0.875	0.92	V
VDD_A_DSI_0_1P2	Power for the display serial interface (DSI) – 1.2 V circuits	1.14	1.2	1.26	V
VDD_A_DSI_0_PLL_0P9	Power for the PLL circuits of display interface	0.83	0.875	0.92	V
VDD_A_EBI_0	Power for EBI circuits (DDR memory controller of SoC)	0.352	0.712	1.05	V
VDD_A_EBI_0_PLL_0P9	Power for EBI PLL in DDR memory controller of SoC	0.352	0.712	1.05	V
VDD_A_EUSB_0_0P9	Power for EUSB2 core circuitry	0.72	0.75	0.95	V
VDD_A_EUSB_0_1P2	Power for EUSB2 1.2 V circuitry	1.08	1.2	1.32	V
VDD_A_PCIE_0_0P9	Power for internal 0.9 V PCIe controller circuitry	0.83	0.875	0.92	V
VDD_A_PCIE_0_1P2	Power for internal 1.2 V PCIe controller circuitry	1.14	1.2	1.26	V
VDD_A_REFGEN_0P875_0	Reference voltage for the circuitry to transmit clocks across the SoC – 0.875 V	0.825	0.875	0.925	V
VDD_A_REFGEN_0P875_1	Reference voltage for the circuitry to transmit clocks across the SoC – 0.875 V	0.825	0.875	0.925	V
VDD_A_REFGEN_1P2_0	Reference voltage for the circuitry to transmit clocks across the SoC – 1.2 V	1.14	1.2	1.26	V
VDD_A_REFGEN_1P2_1	Reference voltage for the circuitry to transmit clocks across the SoC – 1.2 V	1.14	1.2	1.26	V
VDD_AL_BBRX	Power for analog circuits: Low voltage for BBRX	1.1	1.225	1.3	V
VDD_AL_FBRX	Power for analog circuits: Low voltage for FBRX	1.1	1.225	1.3	V
VDD_APC0	Power for the application processor – Arm Cortex-A55	0.352	0.728	1.25	V
VDD_APC1	Power for the application processor - Arm Cortex-A78	0.352	0.728	1.25	V
VDD_CX	Power for SoC core logic domain	0.352	0.728	1.155	V
VDD_LPI_CX	Sensor and LPASS island logic domain core power supply	0.352	0.728	1.05	V

Qualcomm Confidential – May Contain Trade Secrets

Table 3-2 Operating conditions for voltage rails (cont.)

Power supply	Description	Min	Typ	Max	Unit
VDD_D_EBI_0	Power for EBI circuits digital core (DDR memory controller of SoC)	0.352	0.728	1.155	V
VDD_GFX	Power for graphical processing unit	0.352	0.728	1.155	V
VDD_IO_EBI_0	Power for the EBI I/O circuits	0.27	0.5	0.57	V
VDD_IX	Power for intermediate circuits	0.855	0.9	0.945	V
VDD_MX_A	Power rail for always-ON memory	0.504	0.752	1.05	V
VDD_MX_C	Collapsible memory power rail for GPU/Camera/ Video/APC/Modem	0.504	0.752	1.05	V
VDD_LPI_MX	Power for sensor and LPASS island memory domain	0.504	0.752	1.05	V
VDD_MX_A_TXDAC_ETDAC	Power for circuits related to envelope tracker DAC and TXDAC of RF – memory domain	0.504	0.752	1.05	V
VDD_NSP	Power for the internal neural signal processor	0.352	0.728	1.155	V
VDD_PX0	Special pads for the RESET IN, deep sleep and SPMI	1.1	1.2	1.3	V
VDD_PX1	Power for the pad group 1: DDR controller RESET circuitry	1.01	1.1	1.17	V
VDD_PX3	Power for the pad group 3: SDIO RESETs	1.65	1.8	1.95	V
VDD_PX11	Power for the pad group 11: CXO pads	1.1	1.2	1.3	V
VDD_PX14	Power for the pad group 14: 1.2 V GPIOs, JTAG, PS_HOLD, SLEEP_CLK	1.1	1.2	1.3	V
VDD_PX701	Power for the pad group 701: 1.2 V/1.8 V dual pads	1.1	1.2	1.3	V
		1.65	1.8	1.95	V
VDD_PX702	Power for the pad group 702: 1.2 V/1.8 V dual pads	1.1	1.2	1.3	V
		1.65	1.8	1.95	V
VDD_PX703	Power for the pad group 703: 1.2 V/1.8 V dual pads	1.1	1.2	1.3	V
		1.65	1.8	1.95	V
VDD_PX704	Power for the pad group 704: 1.2 V/1.8 V dual pads	1.1	1.2	1.3	V
		1.65	1.8	1.95	V
VDD_PX705	Power for the pad group 705: 1.2 V/1.8 V dual pads	1.1	1.2	1.3	V
		1.65	1.8	1.95	V
VDD_PX706	Power for the pad group 706: 1.2 V/1.8 V dual pads	1.1	1.2	1.3	V
		1.65	1.8	1.95	V
VDD_PX707	Power for the pad group 707: 1.2 V/1.8 V dual pads	1.2	1.2	1.3	V
		1.65	1.8	1.95	V
VDD_PX709	Power for the pad group 709: 1.2 V/1.8 V dual pads	1.1	1.2	1.3	V
		1.65	1.8	1.95	V
VDD_PX711	Power for the pad group 711: 1.2 V/1.8 V dual pads	1.1	1.2	1.3	V
		1.65	1.8	1.95	V
VDD_PX712	Power for the pad group 712: 1.2 V/1.8 V dual pads	1.1	1.2	1.3	V
		1.65	1.8	1.95	V

Qualcomm Confidential - May Contain Trade Secrets 2025-02-27 02:29:50 GMT hyungdwl.woo@lge.com

Table 3-2 Operating conditions for voltage rails (cont.)

Power supply	Description	Min	Typ	Max	Unit
VDD_PX714	Power for the pad group 714: 1.2 V/1.8 V dual pads	1.1	1.2	1.3	V
		1.65	1.8	1.95	V
VDD_PX715	Power for the pad group 715: 1.2 V/1.8 V dual pads	1.1	1.2	1.3	V
		1.65	1.8	1.95	V
VDD_QFPROM	Power for programming the internal QFPROM	1.65	1.8	1.95	V
VDD_AH_TXDAC_ETDAC	Power for circuits related to envelope tracker DAC and TXDAC of RF – core domain	1.7	1.8	1.9	V
Thermal condition					
T	Device operating conditions	Tambient = -30	–	Tjunction = 95	℃

Table 3-3 Operating conditions for voltage rails with AVS

VDD rail	Mode	Min	Max	Unit
CX	Turbo_L1	0.65	0.964	V
	Turbo	0.61	0.907	V
	Nominal	0.56	0.823	V
	SVS_L1	0.525	0.797	V
	SVS	0.495	0.784	V
	LowSVS	0.495	0.713	V
	LowSVS_D1	0.495	0.678	V
MXA/MXC	Turbo_L1	0.75	0.942	V
	Turbo	0.75	0.907	V
	Nominal_L1	0.705	0.863	V
	Nominal	0.705	0.854	V
	SVS_L1	0.705	0.797	V
	SVS	0.675	0.797	V
	LowSVS	0.675	0.757	V
	LowSVS_D1	0.675	0.757	V
	LowSVS_D2	0.675	0.757	V
	LowSVS_D3	0.675	0.757	V
VDD_GFX	Turbo_L1	0.65	0.964	V
	Turbo	0.61	0.902	V
	Nominal_L1	0.59	0.858	V
	Nominal	0.56	0.818	V
	SVS_L1	0.525	0.790	V
	SVS	0.49	0.772	V
	LowSVS	0.465	0.703	V
	LowSVS_D1	0.465	0.668	V
	LowSVS_D2	0.45	0.637	V

Qualcomm Confidential – May Contain Trade Secrets 2022-01-27 02:29:50 GMT hyungchul.won@lge.com

Table 3-3 Operating conditions for voltage rails with AVS (cont.)

VDD rail	Mode	Min	Max	Unit
	LowSVS_D3	0.45	0.602	V
VDD_NSP	Turbo_L1	0.65	0.991	V
	Turbo	0.61	0.948	V
	Nominal_L1	0.59	0.897	V
	Nominal	0.56	0.843	V
	SVS_L1	0.525	0.79	V
	SVS	0.495	0.768	V
	LowSVS	0.495	0.707	V
	LowSVS_D1	0.495	0.672	V
	LowSVS_D2	0.495	0.638	V
VDD_LPI_CX	Turbo	0.61	0.902	V
	Nominal	0.56	0.823	V
	SVS_L1	0.525	0.7972	V
	SVS	0.495	0.7796	V
	LowSVS	0.495	0.718	V
	LowSVS_D1	0.495	0.6828	V
VDD_LPI_MX	Turbo	0.75	0.902	V
	Nominal	0.705	0.858	V
	SVS_L1	0.705	0.797	V
	SVS	0.705	0.797	V
	LowSVS	0.705	0.797	V
	LowSVS_D1	0.705	0.797	V
VDDA_EBI	Turbo_L1	0.77	0.920	V
	Turbo	0.77	0.920	V
	Nominal	0.67	0.841	V
	SVS	0.62	0.823	V
	LowSVS	0.55	0.744	V
	LowSVS_D1	0.55	0.744	V
VDD_APC0	Turbo_L1	0.75	0.894	V
	Turbo	0.654	0.842	V
	Nominal_L1	0.59	0.802	V
	Nominal	0.56	0.766	V
	SVS_L1	0.525	0.742	V
	SVS	0.495	0.73	V
	LowSVS	0.48	0.666	V
	LowSVS_D1	0.48	0.634	V
	LowSVS_D2	0.48	0.606	V
VDD_APC1	Turbo_L1	0.774	0.894	V
	Turbo	0.774	0.842	V

Qualcomm Confidential – May Contain Trade Secrets 2020-02-27 02:29:50 GMT hyungchul.won@lge.com

Table 3-3 Operating conditions for voltage rails with AVS (cont.)

VDD rail	Mode	Min	Max	Unit
	Nominal_L1	0.61	0.802	V
	Nominal	0.582	0.766	V
	SVS_L1	0.546	0.742	V
	SVS	0.51	0.73	V
	LowSVS	0.51	0.666	V
	LowSVS_D1	0.51	0.634	V
	LowSVS_D2	0.51	0.606	V

3.3 Power delivery network specification

A detailed power delivery network specification is available in the *SW6100/SW6100P Hardware Design Guide* (80-83950-5) document.

3.4 DC power characteristics

3.4.1 Average operating current

Detailed current consumption information and details about the operating modes tested are available in the *SW6100 Linux Wear (LW1.0) Current Consumption Data Application Note* (80-83950-7) document.

3.4.2 Dhrystone and rock-bottom maximum power

Table 3-4 Dhrystone and rock bottom maximum power

SoC Designation	1 × Arm Cortex-A78 (Kyro Gold) + 4 × A55 (Kyro Silver) 95℃ (Tj) [a b c]	Rock bottom mW 30°C (Tj) [d]
SW6100	1.1 W at Rail	6 mW at Rail

[a] Dhrystone specification applies to SW6100 CS devices that run at 2100 MHz (1 × Arm Cortex-A78 Gold), and 1950 MHz (4 × A55 Silver).
[b] Dhrystone power should be measured on VDD_APC0 and VDD_APC1 rails, at the point right before PDN capacitors (with a small resistor in serial inserted, if necessary).
[c] Measurement sampling rate should be > 1.25 Msps (or < 0.8 µS), and average window should be > 1 ms (or > 1250 samples).
[d] Rock Bottom (VDD_LPI_CX, VDD_LPI_MX, VDD_MXA) should be measured at the VDD_LPI_CX, VDD_LPI_MX, VDD_MXA rails. See *SW6100 Linux Wear (LW1.0) Current Consumption Data Application Note* (80-83950-7) for the test setup.

3.5 Power sequencing

The PMIC includes power-on circuits that provide the proper power sequencing for the entire SW6100 chipset. The supplies are turned on as groups of regulators that are selected by the hardware configuration of certain PMIC pins. For more information, see the PMIC Data sheets, *PW6100-1 Power Management IC Data Sheet (80-83961-1)* and *PW6100-0 Power Management IC Data Sheet (80-83960-1)*.

A high-level summary of the required power-on sequence:

- VDD_PX0, VDD_EUSB_1P2
- VDD_MX_A
- VDD_MX_C

- VDD_LPI_MX
- VDD_A_EBI_0, VDD_A_EBI_0_PLL_0P9
- VDD_CX, VDD_D_EBI_0
- VDD_LPI_CX
- VDD_PX14, VDD_PX709_1P2
- VDD_IX
- VDD_PX7xx_1P8, VDD_PX3
- VDD_PX11, VDD_A_CSI_0_1P2, VDD_A_DSI_0_1P2, VDD_A_PCIE_0_1P2, VDD_A_EUSB_0_1P2, VDD_A_REFGEN_1P2_0/1
- LPDDR5_VDD1
- VDD_PX1, LPDDR5_VDD2H
- LPDDR5_VDD2L
- VDD_IO_EBI_0, LPDDR5_VDDQ
- VDD_A_CSI_0_0P9, VDD_A_DSI_0_0P9, VDD_A_DSI_0_PLL_0P9, VDD_A_PCIE_0_0P9, VDD_A_EUSB_0_0P9, VDD_A_REFGEN_0P875_0/1, VDD_A_GNSS_ADC_0P9
- VDD_EUSB_3P0
- VCC_EMMC
- VCCQ_EMMC
- VDD_APC0

Comments regarding this sequence:

- Other noncritical supplies are included within the power-on sequence. Any other supplies can be powered on by software after the sequence is completed.
- Each domain must reach its 90% value before the next domain starts ramping up. For example, when VDD_CX reaches 90% of its value, the VDD_PX supply can start ramping up.

Qualcomm Confidential – May Contain Trade Secrets 2026-02-27 02:29:50 GMT hyungchul.workplace.com

3.6 Digital-logic characteristics

A digital I/Os performance specification depends on its pad type, its usage, and/or its supply voltage:

- Some digital I/Os are dedicated for interconnections between the SW6100-2/SW6100P-2 and other ICs within the QTI chipset; therefore, specifications are not required.
- Some digital I/Os are defined by existing standards, such as I²C and SPI. QTI devices comply with those standards; therefore, additional specifications are not required.
- All other digital I/Os require performance specifications.

Table 3-5 DC specification of eSPMI

Parameter	Description	Min	Max	Unit
V_{IH}	High-level input voltage, CMOS/Schmitt (HIHYS_EN = low)	0.35 × VDD_PX	0.65 × VDD_PX	V
V_{IL}	Low-level input voltage, CMOS/Schmitt (HIHYS_EN = low)	0.35 × VDD_PX	0.65 × VDD_PX	V
V_{IH}	High-level input voltage, CMOS/Schmitt (HIHYS_EN = high)	0.3 × VDD_PX	0.7 × VDD_PX	V
V_{IL}	Low-level input voltage, CMOS/Schmitt (HIHYS_EN = high)	0.3 × VDD_PX	0.7 × VDD_PX	V

Table 3-5 DC specification of eSPMI (cont.)

Parameter	Description	Min	Max	Unit
V_{SHYS}	Schmitt hysteresis voltage (HIHYS_EN = low)	100	–	mV
V_{SHYS}	Schmitt hysteresis voltage (HIHYS_EN = high)	200	–	mV
I_{IH}	Input high leakage current	–	–	µA
I_{IL}	Input low leakage current	–	–	µA
IOZH	High-level, tri-state leakage current	–	–	µA
I_{OZL}	Low-level, tri-state leakage current	–	–	µA
R_{PD}	Pull-down resistance	10	50	kΩ
R_{PU}	Pull-up resistance	10	50	kΩ
R_{KP}	Bus keeper resistance	10	50	kΩ
V_{OH}	High-level output voltage, CMOS	0.8 × VDD_PX	0.2 × VDD_PX	V
V_{OL}	Low-level output voltage, CMOS	0.8 × VDD_PX	0.2 × VDD_PX	V
I_{OLH}	Output current drive (programmable HDRIVE: 000 to 111)	2	2	mA

Table 3-6 DC specification of 1.2 V GPIOs

Parameter	Description	Min	Max	Unit
V_{IH}	High-level input voltage, CMOS/Schmitt (HIHYS_EN = low)	0.35 × VDD_PX	0.65 × VDD_PX	V
V_{IL}	Low-level input voltage, CMOS/Schmitt (HIHYS_EN = low)	0.35 × VDD_PX	0.65 × VDD_PX	V
V_{IH}	High-level input voltage, CMOS/Schmitt (HIHYS_EN = high)	0.3 × VDD_PX	0.7 × VDD_PX	V
V_{IL}	Low-level input voltage, CMOS/Schmitt (HIHYS_EN = high)	0.3 × VDD_PX	0.7 × VDD_PX	V
V_{SHYS}	Schmitt hysteresis voltage (HIHYS_EN = low)	100	–	mV
V_{SHYS}	Schmitt hysteresis voltage (HIHYS_EN = high)	300	–	mV
I_{IH}	Input high leakage current	–	5	µA
I_{IL}	Input low leakage current	-5	–	µA
I_{OZH}	High-level, tri-state leakage current	–	–	µA
I_{OZL}	Low-level, tri-state leakage current	–	–	µA
R_{PD}	Pull-down resistance	10	50	kΩ
R_{PU}	Pull-up resistance	10	50	kΩ
R_{KP}	Bus keeper resistance	10	50	kΩ
V_{OH}	High-level output voltage, CMOS	0.75 × VDDPX	0.25 × VDDPX	V
V_{OL}	Low-level output voltage, CMOS	0.75 × VDDPX	0.25 × VDDPX	V
I_{OLH}	Output current drive (programmable HDRIVE: 000 to 111)	1.33	10.66	mA

Qualcomm Confidential – May Contain Trade Secrets 2026-02-27 02:29:50 GMT hyungchul.won@ige.com

Table 3-7 DC specification of 1.8 V GPIOs

Parameter	Description	Min	Max	Unit
V_{IH}	High-level input voltage, CMOS/Schmitt (HIHYS_EN = low)	0.35 × VDD_PX	0.65 × VDD_PX	V
V_{IL}	Low-level input voltage, CMOS/Schmitt (HIHYS_EN = low)	0.35 × VDD_PX	0.65 × VDD_PX	V
V_{IH}	High-level input voltage, CMOS/Schmitt (HIHYS_EN = high)	0.3 × VDD_PX	0.7 × VDD_PX	V
V_{IL}	Low-level input voltage, CMOS/Schmitt (HIHYS_EN = high)	0.3 × VDD_PX	0.7 × VDD_PX	V
V_{SHYS}	Schmitt hysteresis voltage (HIHYS_EN = low)	100	–	mV
V_{SHYS}	Schmitt hysteresis voltage (HIHYS_EN = high)	300	–	mV
I_{IH}	Input high leakage current	–	5	µA
I_{IL}	Input low leakage current	-5	–	µA
I_{OZH}	High-level, tri-state leakage current	–	–	µA
I_{OZL}	Low-level, tri-state leakage current	–	–	µA
R_{PD}	Pull-down resistance	10	50	kΩ
R_{PU}	Pull-up resistance	10	50	kΩ
R_{KP}	Bus keeper resistance	10	50	kΩ
V_{OH}	High-level output voltage, CMOS	VDD_PX- 0.45	0.45	V
V_{OL}	Low-level output voltage, CMOS	VDD_PX- 0.45	0.45	V
I_{OLH}	Output current drive (programmable HDRIVE: 000 to 111)	2	16	mA

Table 3-8 DC specification of I²C 1.2 V/1.8 V

Parameter	Description	Min	Max	Unit
V_{IH}	High-level input voltage, CMOS/Schmitt (HIHYS_EN = low)	0.35 × VDD_PX	0.65 × VDD_PX	V
V_{IL}	Low-level input voltage, CMOS/Schmitt (HIHYS_EN = low)	0.35 × VDD_PX	0.65 × VDD_PX	V
V_{IH}	High-level input voltage, CMOS/Schmitt (HIHYS_EN = high)	0.3 × VDD_PX	0.7 × VDD_PX	V
V_{IL}	Low-level input voltage, CMOS/Schmitt (HIHYS_EN = high)	0.3 × VDD_PX	0.7 × VDD_PX	V
V_{SHYS}	Schmitt hysteresis voltage (HIHYS_EN = low)	100	–	mV
V_{SHYS}	Schmitt hysteresis voltage (HIHYS_EN = high)	200	–	mV
I_{IH}	Input high leakage current	–	10	µA
I_{IL}	Input low leakage current	-10	–	µA
I_{OZH}	High-level, tri-state leakage current	–	–	µA
I_{OZL}	Low-level, tri-state leakage current	–	–	µA
R_{PD}	Pull-down resistance	10	50	kΩ
R_{PU}	Pull-up resistance	10	50	kΩ
R_{KP}	Bus keeper resistance	10	50	kΩ
V_{OH}	High-level output voltage, CMOS	–	0.2 × VDD_PX	V
V_{OL}	Low-level output voltage, CMOS	–	0.2 × VDD_PX	V
I_{OLH}	Output current drive (programmable HDRIVE: 000 to 111)	–	2	mA

Qualcomm Confidential – May Contain Trade Secrets 2026-02-27 02:29:30 GMT shyuanchi.hong@alps.com

Table 3-9 DC specification of I³C 1.2 V

Parameter	Description	Min	Max	Unit
V_{IH}	High-level input voltage, CMOS/Schmitt (HIHYS_EN = low)	0.35 × VDD_PX	0.65 × VDD_PX	V
V_{IL}	Low-level input voltage, CMOS/Schmitt (HIHYS_EN = low)	0.35 × VDD_PX	0.65 × VDD_PX	V
V_{IH}	High-level input voltage, CMOS/Schmitt (HIHYS_EN = high)	0.3 × VDD_PX	0.7 × VDD_PX	V
V_{IL}	Low-level input voltage, CMOS/Schmitt (HIHYS_EN = high)	0.3 × VDD_PX	0.7 × VDD_PX	V
V_{SHYS}	Schmitt hysteresis voltage (HIHYS_EN = low)	100	–	mV
V_{SHYS}	Schmitt hysteresis voltage (HIHYS_EN = high)	200	–	mV
I_{IH}	Input high leakage current	–	5	µA
I_{IL}	Input low leakage current	-5	–	µA
I_{OZH}	High-level, tri-state leakage current	–	–	µA
I_{OZL}	Low-level, tri-state leakage current	–	–	µA
R_{PD}	Pull-down resistance	10	50	kΩ
R_{PU}	Pull-up resistance	10	50	kΩ
R_{KP}	Bus keeper resistance	10	50	kΩ
V_{OH}	High-level output voltage, CMOS	VDD_PX - 0.18	0.18	V
V_{OL}	Low-level output voltage, CMOS	VDD_PX - 0.18	0.18	V
I_{OLH}	Output current drive (programmable HDRIVE: 000 to 111)	2	2	mA

Table 3-10 DC specification of SLIMbus

Parameter	Description	Min	Max	Unit
V_{IH}	High-level input voltage, CMOS/Schmitt (HIHYS_EN = low)	0.35 × VDD_PX	0.65 × VDD_PX	V
V_{IL}	Low-level input voltage, CMOS/Schmitt (HIHYS_EN = low)	0.35 × VDD_PX	0.65 × VDD_PX	V
V_{IH}	High-level input voltage, CMOS/Schmitt (HIHYS_EN = high)	0.3 × VDD_PX	0.7 × VDD_PX	V
V_{IL}	Low-level input voltage, CMOS/Schmitt (HIHYS_EN = high)	0.3 × VDD_PX	0.7 × VDD_PX	V
V_{SHYS}	Schmitt hysteresis voltage (HIHYS_EN = low)	100	–	mV
V_{SHYS}	Schmitt hysteresis voltage (HIHYS_EN = high)	200	–	mV
I_{IH}	Input high leakage current	–	2	µA
I_{IL}	Input low leakage current	-2	–	µA
I_{OZH}	High-level, tri-state leakage current	–	–	µA
I_{OZL}	Low-level, tri-state leakage current	–	–	µA
R_{PD}	Pull-down resistance	10	50	kΩ
R_{PU}	Pull-up resistance	10	50	kΩ
R_{KP}	Bus keeper resistance	10	50	kΩ
V_{OH}	High-level output voltage, CMOS	0.9 × VDD_PX	0.1 × VDD_PX	V
V_{OL}	Low-level output voltage, CMOS	0.9 × VDD_PX	0.1 × VDD_PX	V
I_{OLH}	Output current drive (programmable HDRIVE: 000 to 111)	1	1	mA

Qualcomm Confidential – May Contain Trade Secrets 2026-02-27 02:29:30 GMT shyamsundar@qualcomm.com

Table 3-11 DC specification of I³C 1.8 V

Parameter	Description	Min	Max	Unit
V_{IH}	High-level input voltage, CMOS/Schmitt (HIHYS_EN = low)	0.35 × VDD_PX	0.65 × VDD_PX	V
V_{IL}	Low-level input voltage, CMOS/Schmitt (HIHYS_EN = low)	0.35 × VDD_PX	0.65 × VDD_PX	V
V_{IH}	High-level input voltage, CMOS/Schmitt (HIHYS_EN = high)	0.3 × VDD_PX	0.7 × VDD_PX	V
V_{IL}	Low-levelinput voltage, CMOS/Schmitt (HIHYS_EN = high)	0.3 × VDD_PX	0.7 × VDD_PX	V
V_{SHYS}	Schmitt hysteresis voltage (HIHYS_EN = low)	100	–	mV
V_{SHYS}	Schmitt hysteresis voltage (HIHYS_EN = high)	200	–	mV
I_{IH}	Input high leakage current	–	10	µA
I_{IL}	Input low leakage current	-10	–	µA
I_{OZH}	High-level, tri-state leakage current	–	–	µA
I_{OZL}	Low-level, tri-state leakage current	–	–	µA
R_{PD}	Pull-down resistance	10	50	kΩ
R_{PU}	Pull-up resistance	10	50	kΩ
R_{KP}	Bus keeper resistance	10	50	kΩ
V_{OH}	High-level output voltage, CMOS	VDD_PX - 0.27	0.27	V
V_{OL}	Low-level output voltage, CMOS	VDD_PX - 0.27	0.27	V
I_{OLH}	Output current drive (programmable HDRIVE: 000 to 111)	3	3	mA

3.7 Timing characteristics

Specifications for the device timing characteristics are included (where appropriate) under each function's section, along with all its other performance specifications. Some general comments about timing characteristics and pertinent pad design methodologies are included here.

NOTE All SW6100/SW6100P chipset are characterized with actively terminated loads; therefore, all baseband timing parameters in this document assume no bus loading. This is described in more detail in Rise and fall time specifications.

Qualcomm Confidential – May Contain Trade Secrets 2026-02-27 02:25:07 GMT hyungchul.won@lge.com

3.7.1 Timing diagram conventions

The conventions used within timing diagrams throughout this document are shown in the following figure.

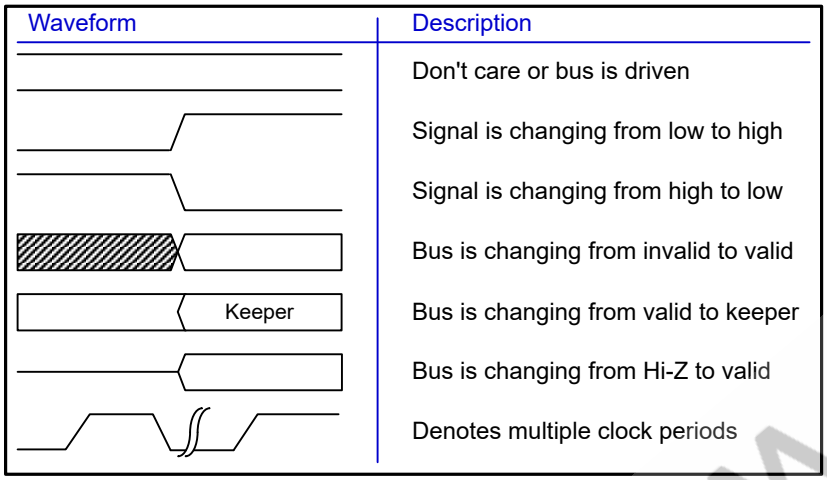

Figure 3-1 Timing diagram conventions

For each signal in the diagram:

- One clock period (T) extends from one rising clock edge to the next rising clock edge.
- The high level represents 1, the low level represents 0, and the middle level represents the floating (high-impedance) state.
- When both the high and low levels are shown over the same time interval, the meaning depends on the signal type:
  - For a bus type signal (multiple bits), the processor or external interface is driving a value, but that value may or may not be valid.
  - For a single signal, this indicates don't care.

Qualcomm Confidential - May Contain Trade Secrets 2026-02-27 02:29:50 GMT hyungchul.won@line.com

3.7.2 Rise and fall time specifications

The testers that characterize SW6100/SW6100P chipset have actively terminated loads, making the rise and fall times quicker (mimicking a no-load condition). The impact that different external load conditions have on rise and fall times is shown in Figure 3-2.

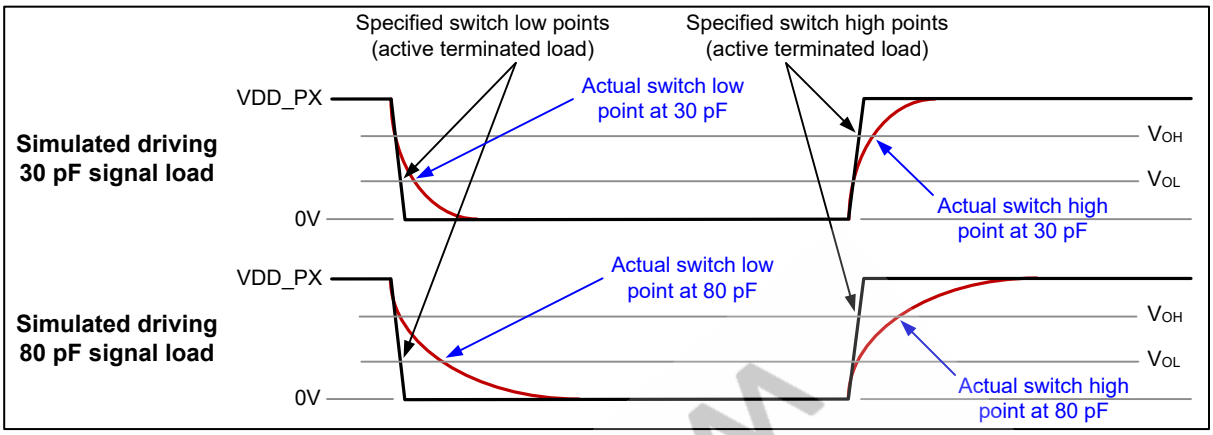

Figure 3-2 Rise and fall times under different load conditions

To account for external load conditions, rise or fall times must be added to parameters that start timing at the SW6100 chipset and terminate at an external device (or vice versa). Adding these rise and fall times is equivalent to applying capacitive load derating factors.

3.7.3 SDCC

Timing diagram

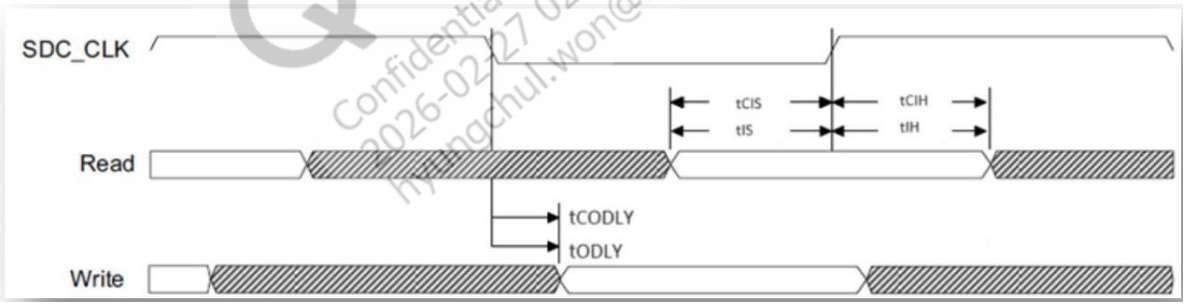

Figure 3-3 Single data rate – SDR mode

Qualcomm Confidential - May Contain Trade Secrets 2026-02-27 02:29:50 GMT hyungchul.won@lge.com

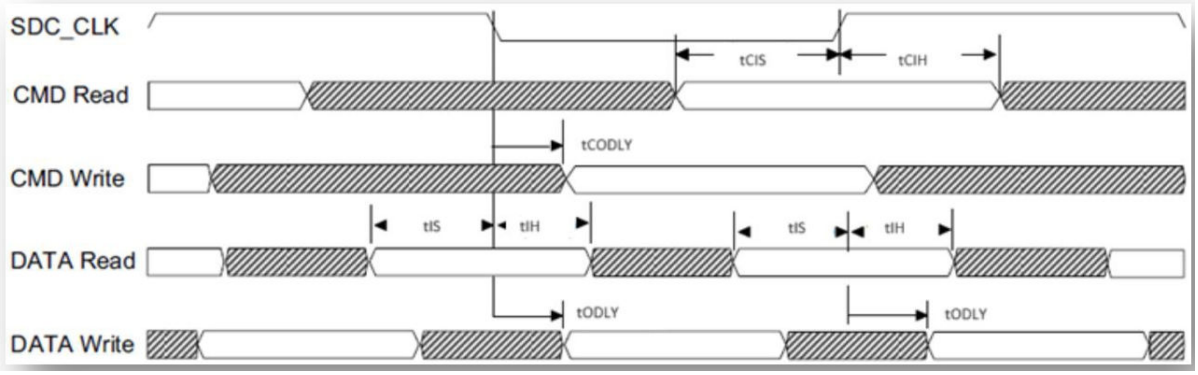

Figure 3-4 Double data rate – DDR mode

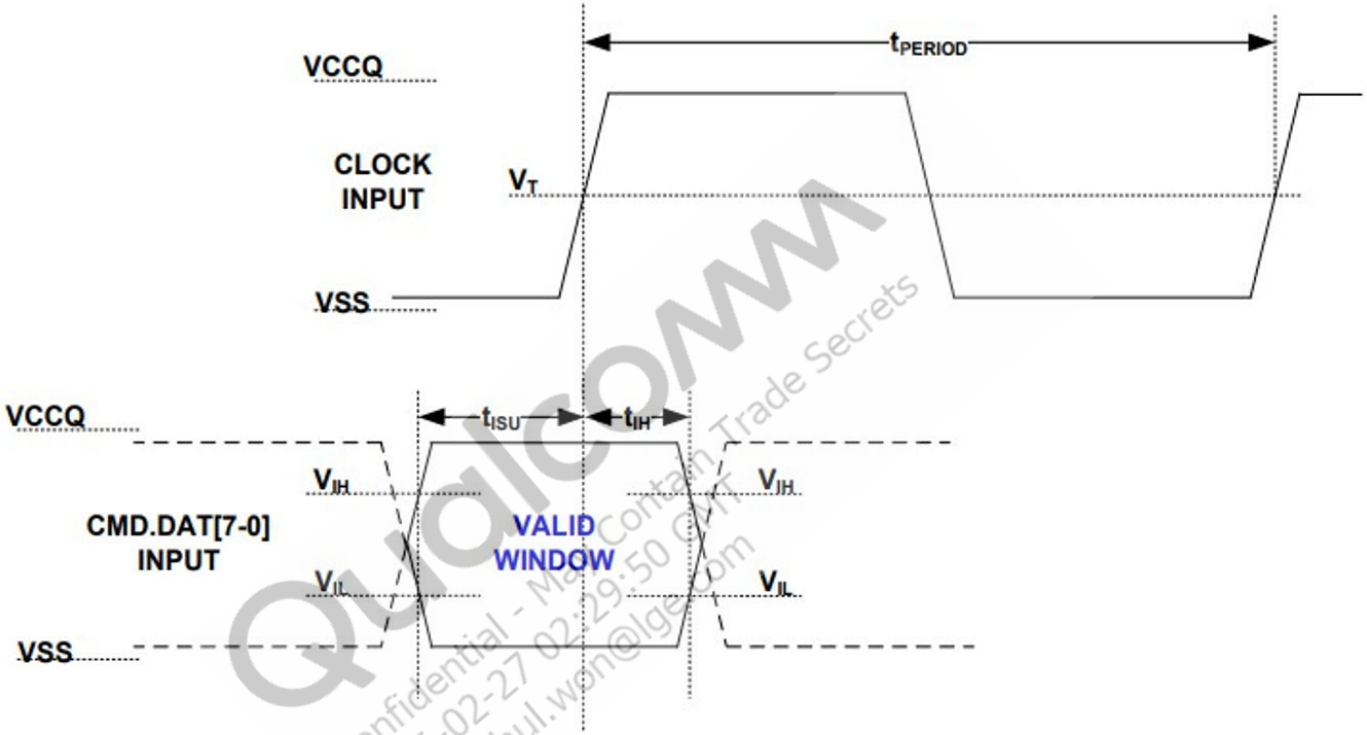

Figure 3-5 SDCC I/O AC characterization valid window

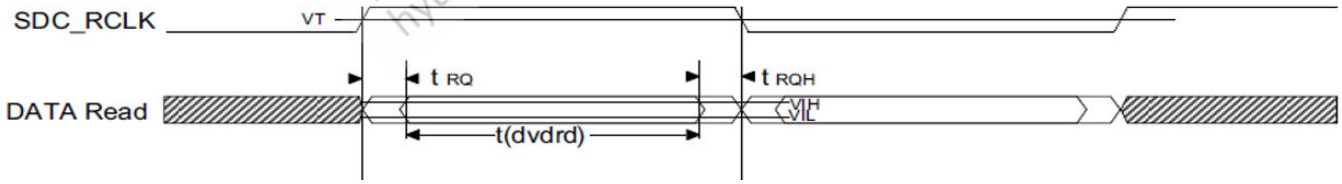

Figure 3-6 HS400 mode input timing

Qualcomm Confidential - May Contain Trade Secrets 2026-02-27 02:29:50 GMT hyungchul.won@lge.com

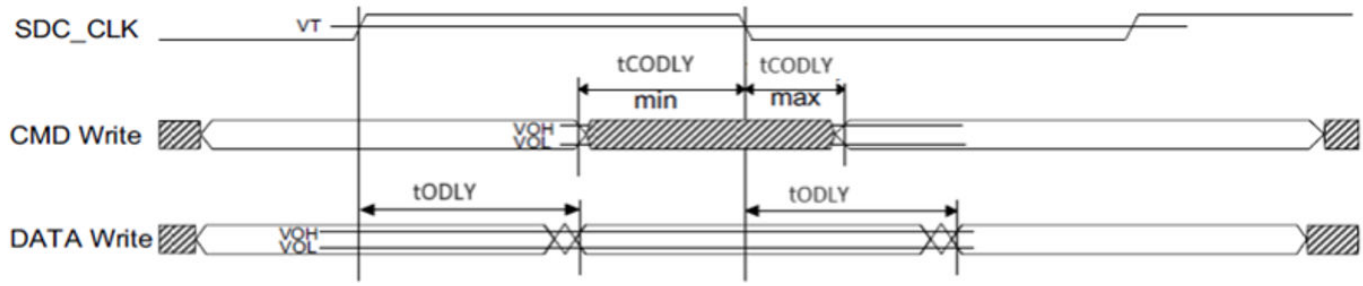

Figure 3-7 HS400 mode output timing

Timing specification with respect to controller

Table 3-12 SDC1 timing specification with respect to controller – Regular mode

SDCC modes	Frequency	Parameter	Description	Min (ns)	Max (ns)
HS400 (DDR200 MHz)	192 MHz	Tclhigh	Clock high time	2.292	2.917
		tCIDV	Command input valid window	2.4	–
		tCODLY	Command output delay	-1.45	0.85
		tRQ	DQS to DQ valid setup	0.4	–
		tRQH	DQS to DQ valid hold	0.4	–
		tIDV	Data input valid window	1.7	–
		tODLY	Data output delay	0.4	1.85
HS200 (SDR200 MHz)	192 MHz	Tclhigh	Clock high time	1.563	3.646
		tCIDV	Command input valid window	2.4	–
		tCODLY	Command output delay	-1.45	0.85
		tIDV	Data input valid window	2.4	–
		tODLY	Data output delay	-1.45	0.85

Table 3-13 SDC2 timing specification with respect to controller – Regular mode

SDCC modes	Frequency	Parameter	Description	Min (ns)	Max (ns)
SDR50	100 MHz	Tclhigh	Clock high time	3	7
		tCIDV	Command input valid window	2.4	–
		tCODLY	Command output delay	-3.7	1.5
		tIDV	Data input valid window	2.4	–
		tODLY	Data output delay	-3.7	1.5

NOTE SDC2 is for SDIO in SW6100, not SD 3.0.

Qualcomm Confidential – May Contain Trade Secrets 2026-02-27 02:29:50 GMT hwunchul.wo@lge.com

3.7.4 I²S

I²S timing specifications

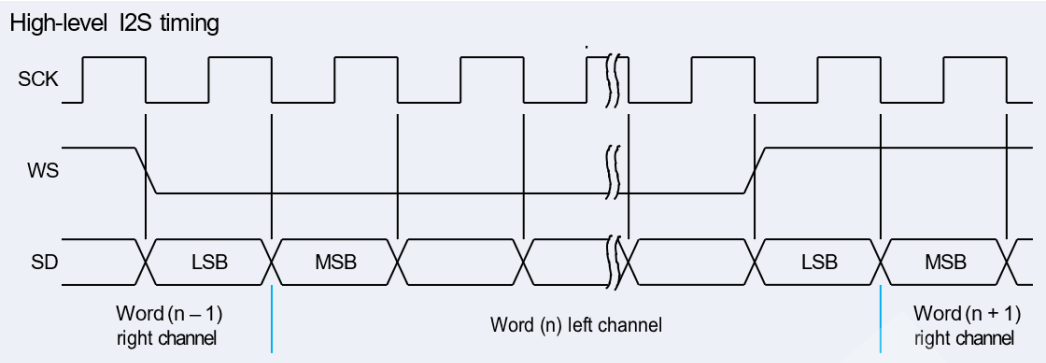

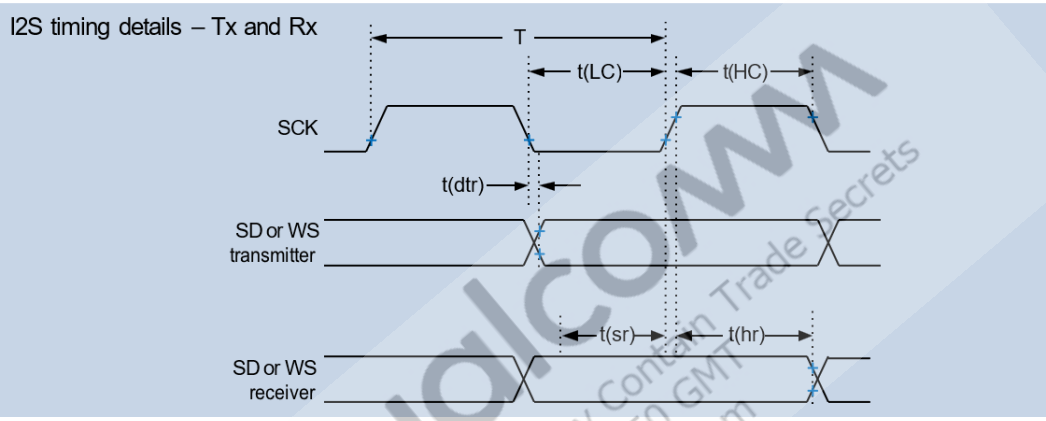

Figure 3-8 I²S timing diagram

Table 3-14 I²S master AC specifications

HV, TUR, NOM						
Parameter		**Comments**	**Min**	**Typ**	**Max**	**Unit**
Using internal SCK						
N/A	Frequency	–	–	–	24.576	MHz
T	Clock period	–	40.69	–	–	ns
t (HC)	Clock high	–	0.45x T	–	0.55x T	ns
t (LC)	Clock low	–	0.45x T	–	0.55x T	ns
t (sr)	SD and WS input setup time	–	8.14	–	–	ns
t (hr)	SD and WS input hold time	–	1.5	–	–	ns
t (dtr)	SD and WS output delay	–	–	–	8.14	ns
SVS						
Parameter		**Comments**	**Min**	**Typ**	**Max**	**Unit**
Using internal SCK						
N/A	Frequency	–	–	–	12.288	MHz
T	Clock period	–	81.38	–	–	ns

Qualcomm Confidential - May Contain Trade Secrets 2026-02-27 02:29:50 GMT hyungchul.won@lge.com

Table 3-14 I²S master AC specifications (cont.)

t (HC)	Clock high	–	0.45x T	–	0.55x T	ns
t (LC)	Clock low	–	0.45x T	–	0.55x T	ns
t (sr)	SD and WS input setup time	–	16.28	–	–	ns
t (hr)	SD and WS input hold time	–	1.5	–	–	ns
t (dtr)	SD and WS output delay	–	–	–	16.28	ns
Low SVS						
Parameter		**Comments**	**Min**	**Typ**	**Max**	**Unit**
Using internal SCK						
N/A	Frequency	–	–	–	6.144	MHz
T	Clock period	–	162.76	–	–	ns
t (HC)	Clock high	–	0.45x T	–	0.55x T	ns
t (LC)	Clock low	–	0.45x T	–	0.55x T	ns
t (sr)	SD and WS input setup time	–	32.56	–	–	ns
t (hr)	SD and WS input hold time	–	1.5	–	–	ns
t (dtr)	SD and WS output delay	–	–	–	32.56	ns

Table 3-15 I²S slave AC specifications

HV, TUR, NOM							
Parameter		**Comments**	**Min**	**Typ**	**Max**	**Unit**	**Internal note**
Using external SCK							x % of T
N/A	Frequency	–	–	–	24.576	MHz	
T	Clock period	–	40.69	–	–	ns	–
t (sr)	SD and WS input setup time	–	8.14	–	–	ns	20
t (hr)	SD and WS input hold time	–	1.5	–	–	ns	–
t (dtr)	SD and WS output delay	–	–	–	8.14	ns	20
SVS							
Parameter		**Comments**	**Min**	**Typ**	**Max**	**Unit**	**Internal note**
Using external SCK							x % of T
N/A	Frequency	–	–	–	12.288	MHz	
T	Clock period	–	81.38	–	–	ns	–
t (sr)	SD and WS input setup time	–	16.28	–	–	ns	20
t (hr)	SD and WS input hold time	–	1.5	–	–	ns	–
t (dtr)	SD and WS output delay	–	–	–	16.28	ns	20
Low SVS							
Parameter		**Comments**	**Min**	**Typ**	**Max**	**Unit**	**Internal note**
Using external SCK							x % of T
N/A	Frequency	–	–	–	6.144	MHz	
T	Clock period	–	162.76	–	–	ns	–
t (sr)	SD and WS input setup time	–	32.56	–	–	ns	20

Qualcomm Confidential - May Contain Trade Secrets 2026-02-27 02:29:50 GMT hyungchul.won@lge.com

Table 3-15 I²S slave AC specifications (cont.)

t (hr)	SD and WS input hold time	–	1.5	–	–	ns	–
t (dtr)	SD and WS output delay	–	–	–	32.56	ns	20

3.7.5 SoundWire

Timing diagram

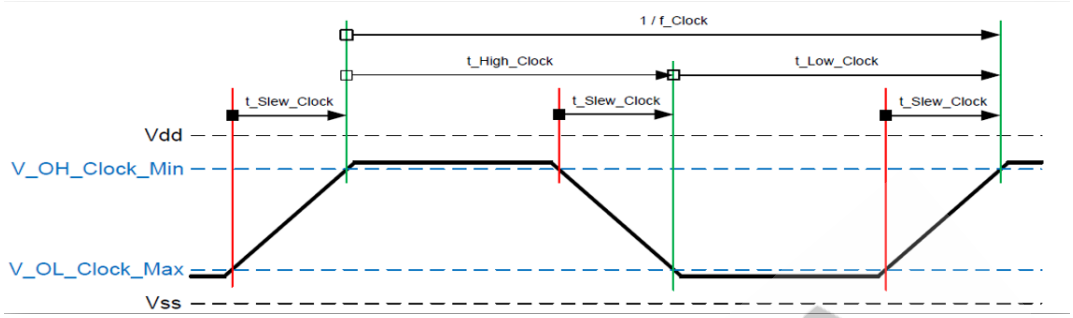

Figure 3-9 Duty cycle of clock output from the master

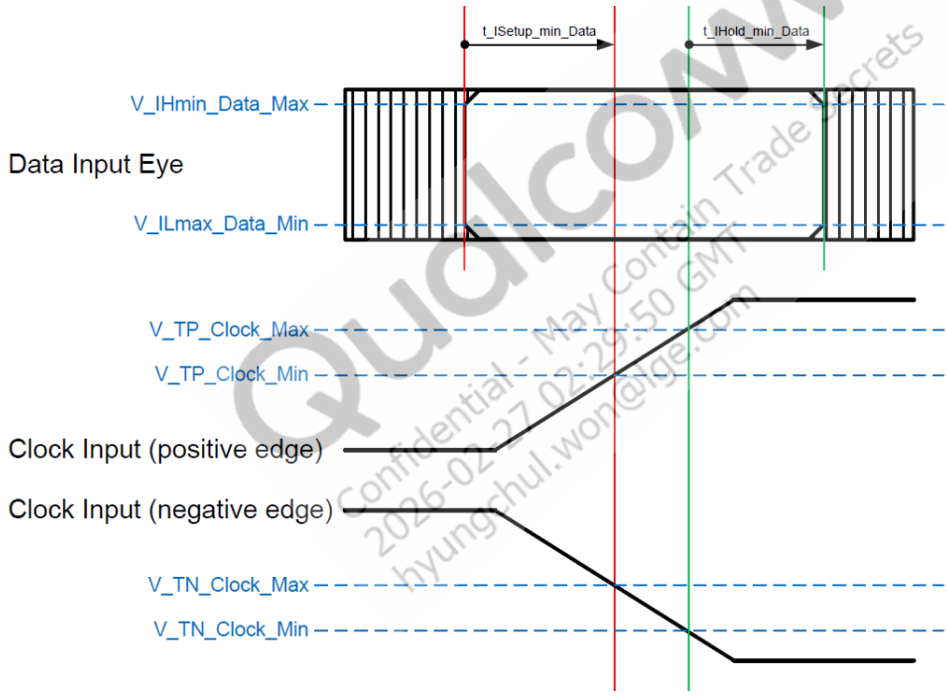

Figure 3-10 Setup and hold time

Qualcomm Confidential - May Contain Trade Secrets 2026-02-27 02:29:50 GMT hyungchul.won@tge.com

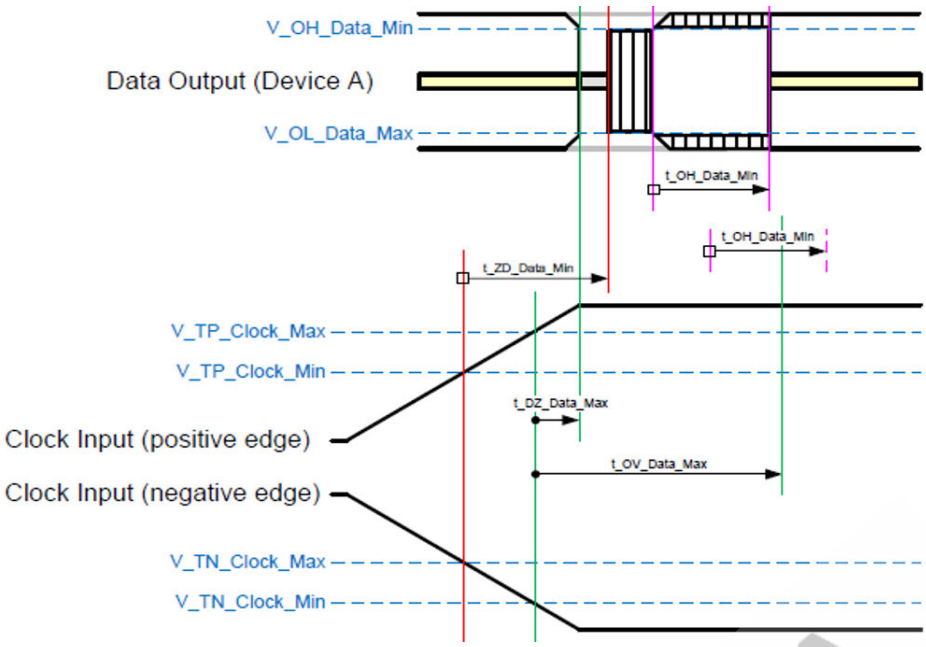

Figure 3-11 Output enable time (Toh), Hi-Z measurements (TZD and TDZ)

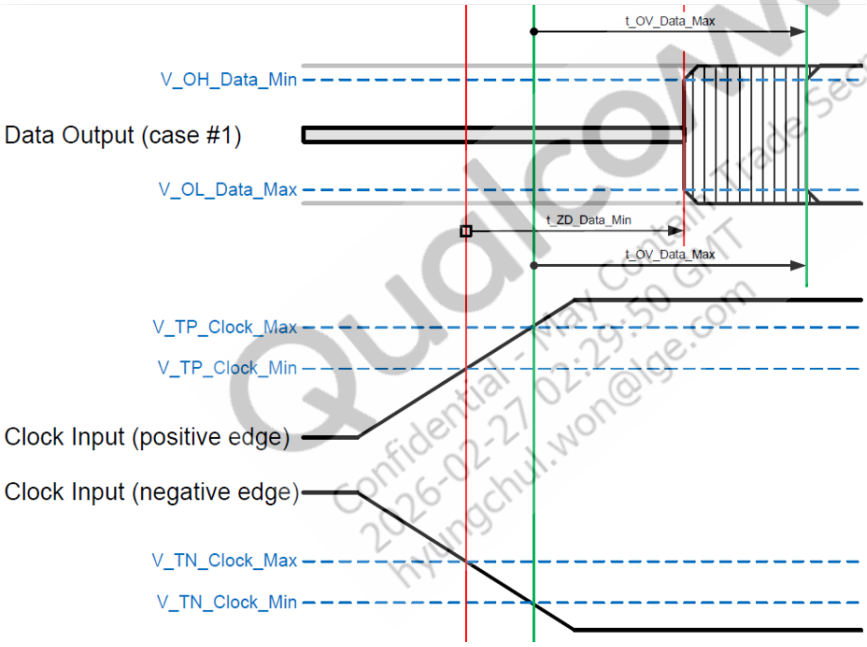

Qualcomm Confidential - May Contain Trade Secrets 2026-02-27 02:29:50 GMT hyungchul.won@lge.com

Figure 3-12 Output valid time (Tov)

AC timing parameters

Table 3-16 SoundWire timing

Symbol	Parameter	Min	Max	Units
f_Clock_small	Frequency of clock signal in small systems	–	12.288	MHz
t_High_Clock_small	Duration of high half-period on clock output signal in small systems	35.3	–	ns
t_Low_Clock_small	Duration of low half-period on clock output signal in small systems	35.3	–	ns
t_DZ_Data	Time to disable data output signal after positive or negative edge on clock input signal	–	4	ns

Table 3-16 SoundWire timing (cont.)

Symbol	Parameter	Min	Max	Units
t_ZD_Data	Time to enable data output signal after positive or negative edge on clock input signal	7.9	–	ns
t_OV_Data_small	Time to valid data output signal after positive or negative edge on clock input signal in small systems	–	27.6	ns
t_OH_Data	Time for data output signal to remain enabled and valid after first becoming valid	6.7	–	ns
t_ISetup_min_Data	Input setup time	0	–	ns
t_IHold_min_Data	Input hold time	4	–	ns
DC_Out_Clock	Duty cycle generated at clock output signal. Calculated from t_Low_Clock / (t_Low_Clock + t_High_Clock)	46% of the SWR CLK	54% of the SWR CLK	–

NOTE Characterization is performed at highest frequency 12.288 MHz only.

3.7.6 SPMI

Timing specifications for master SCLK driver

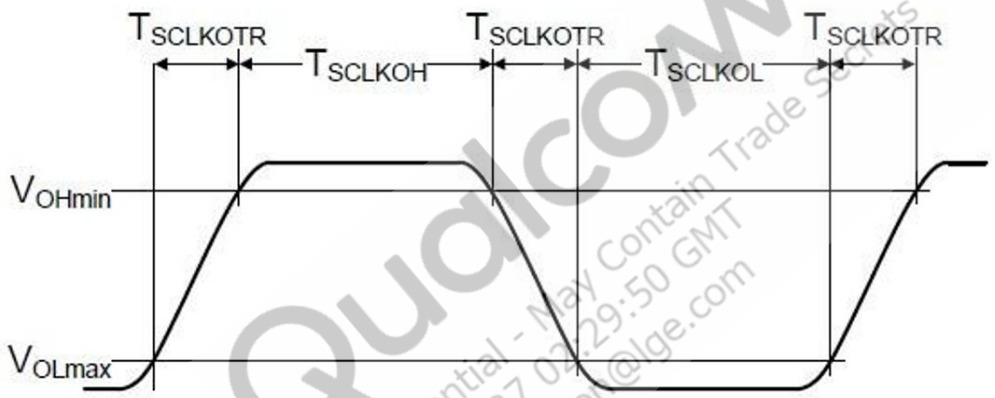

Figure 3-13 Clock driver output waveform

Table 3-17 Primary mode (eSPMI0) SCLK output timing characteristics (38.4 MHz)

Parameter	Description	Low speed device		High speed device		Unit
		Min	Max	Min	Max	
T_{sclkoh}	Clock output high	–	–	8.7	–	ns
T_{sclkol}	Clock output low	–	–	8.7	–	ns

Qualcomm Confidential - May Contain Trade Secrets 2026-02-27 02:29:50 GMT hyungshul.woo@lge.com

Timing specifications for SDATA driver

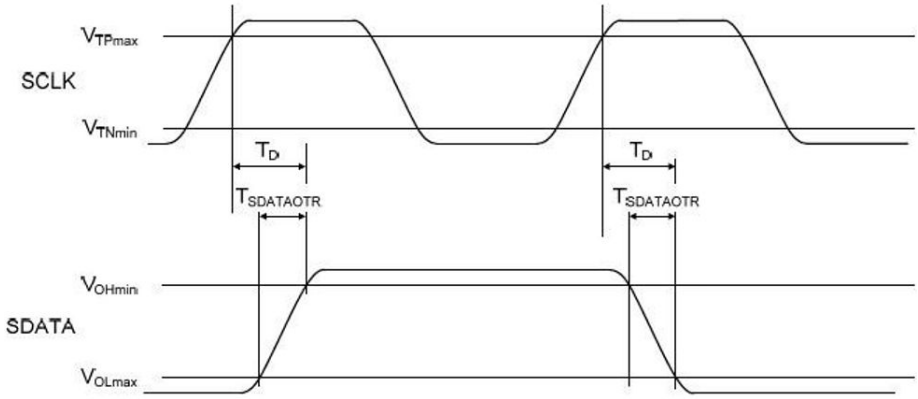

Figure 3-14 Bus active data transmission timing

Table 3-18 Primary mode (eSPMI0) SDATA output timing characteristics (38.4 MHz)

Parameter	Description	Low speed		High speed		Unit
		Min	Max	Min	Max	
T_d	Time for data valid from SCLK rising edge	–	–	-3.9	3.9	ns

Timing specifications for SDATA receiver

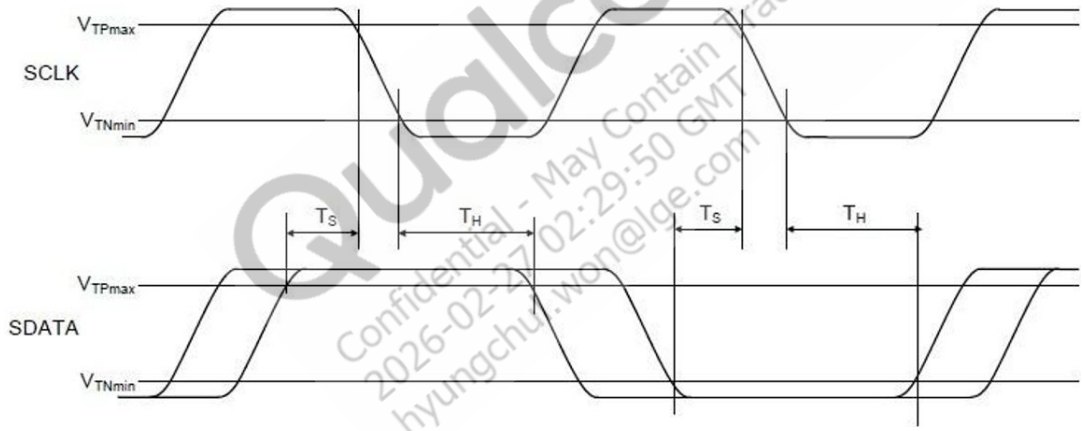

Figure 3-15 Bus active data receiver timing requirements

Table 3-19 Primary mode (eSPMI0) Data receiver timing requirements (38.4 MHz)

Parameter	Description	Low speed		High speed		Unit
		Min	Max	Min	Max	
T_S	Data setup time	–	–	3	–	ns
T_H	Data hold time	–	–	3	–	ns

Qualcomm Confidential - May Contain Trade Secrets 2026-02-27 02:29:50 GMT hyungchul.won@lge.com

Timing specifications for SDATA release time

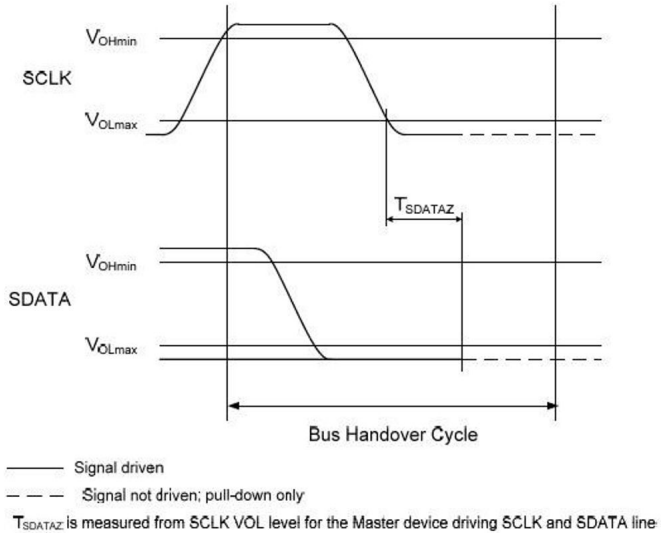

Figure 3-16 Bus handover timing

Table 3-20 Primary mode (eSPMI0) SDATA timing release parameters (38.4 MHz)

Parameter	Description	Low speed		High speed		Units
		Min	Max	Min	Max	
T_{SDATAz}	Data drive release time	–	–	-8.3	–	ns

3.7.7 SWD

SWD timing requirements

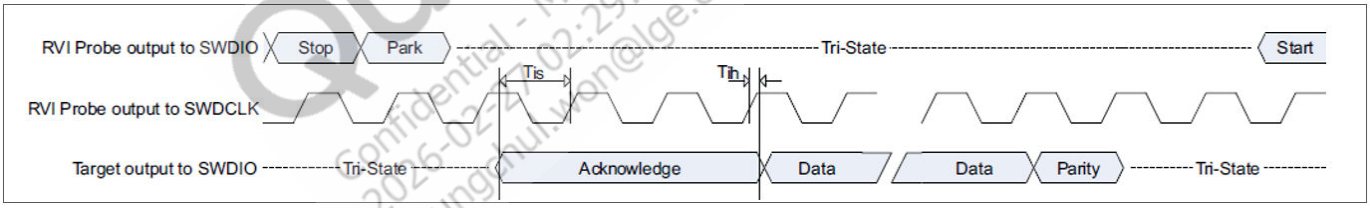

Figure 3-17 SWD timing requirements

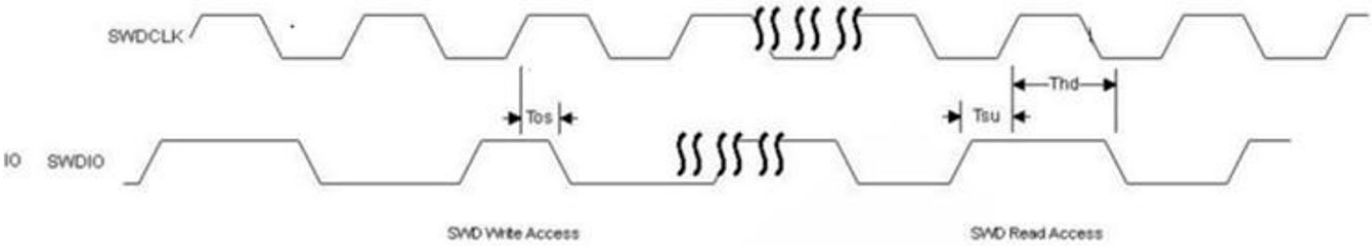

Figure 3-18 SWD write and read AC timing diagram

Qualcomm Confidential - May Contain Trade Secrets 2026-02-27 02:29:50 GMT hyungchul.won@lge.com

Table 3-21 AC timing requirements

Parameter	Min	Max	Units	Description
Frequency	–	20	MHz	Frequency of operation
T_{os}	-1	17.5	ns	SWDIO output skew to rising edge SWDCLK
T_{is}	6.5	–	ns	Input setup time required between SWDIO and rising edge SWDCLK
T_{ih}	6.5	–	ns	Input hold time required between SWDIO and rising edge SWDCLK

NOTE ATE is Target. All RX and TX measurements are with respect to rising edge of SWD clk. For T_{os}, take reference of T_{ih} parameter from Figure 3-17.

3.7.8 QUP

SPI AC timing parameters for master and slave modes

Table 3-22 SPI master TX modes of characterization

MODE index	CPOL	CPHA	SCLK edge for characterization (Full cycle timing)	CHAR mode register value
MODE0	0	0	Fall edge	0×50
MODE1	0	1	Rise edge	0×78
MODE2	1	0	Rise edge	0×d0
MODE3	1	1	Fall edge	0×f8

Table 3-23 SPI master RX modes of characterization

MODE index	CPOL	CPHA	SCLK edge for characterization (Full cycle timing)	CHAR mode register value
MODE0	0	0	Fall edge	0×18
MODE1	0	1	Not supported	–
MODE2	1	0	Rise edge	0×98
MODE3	1	1	Not supported	–

Table 3-24 SPI master timing (master at 50, 25 MHz)

Symbol	Parameter	Min	Max	Unit
Frequency	M_SPI_CLK at HV, TUR, NOM, SVS	–	50	MHz
	M_SPI_CLK at LSVS	–	25	
T_{OV}	M_OUTPUT_VALID	-5	+5	ns
T_{SU}	M_INPUT_SETUP	5	–	ns
T_{HD}	M_INPUT_HOLD	1	–	ns

Table 3-25 SPI slave timing high performance (slave at 50 MHz)

Symbol	Parameter	Min	Max	Unit
Frequency	S_SPI_CLK at HV, TUR, NOM	–	50	MHz
T_{OV}	S_OUTPUT_VALID	2	13	ns
T_{SU}	S_INPUT_SETUP	3	–	ns

Qualcomm Confidential – May Contain Trade Secrets 2026-02-27 02:29:50 GMT hyungchul.won@lge.com

Table 3-25 SPI slave timing high performance (slave at 50 MHz) (cont.)

Symbol	Parameter	Min	Max	Unit
T_{HD}	S_INPUT_HOLD	3	–	ns
T_{CS_en}	S_TRI_STATE_EN	–	14	ns
T_{CS_dis}	S_TRI_STATE_DIS	–	14	ns

Table 3-26 SPI slave timing (slave at 25, 12.5 MHz)

Symbol	Parameter	Min	Max	Unit
Frequency	S_SPI_CLK at SVS	–	25	MHz
	S_SPI_CLK at LSVS	–	12.5	
T_{OV}	S_OUTPUT_VALID	2	17	ns
T_{SU}	S_INPUT_SETUP	6	–	ns
T_{HD}	S_INPUT_HOLD	6	–	ns
T_{CS_en}	S_TRI_STATE_EN	2	17	ns
T_{CS_dis}	S_TRI_STATE_DIS	2	17	ns

NOTE For SPI timing characteristics, see *Serial Peripheral Interface Protocol Specification (80-VD509-1)*.

I³C timing diagrams and AC timing parameters

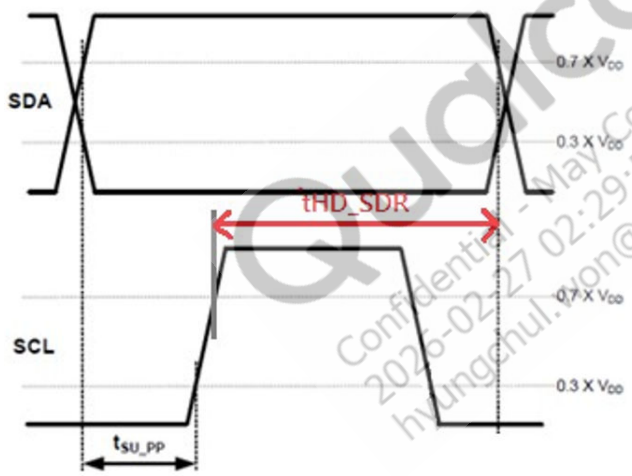

Figure 3-19 Push Pull mode master SDR mode timing diagram

Qualcomm Confidential - May Contain Trade Secrets 2026-02-27 02:29:50 GMT hyungchul.yoon@lge.com

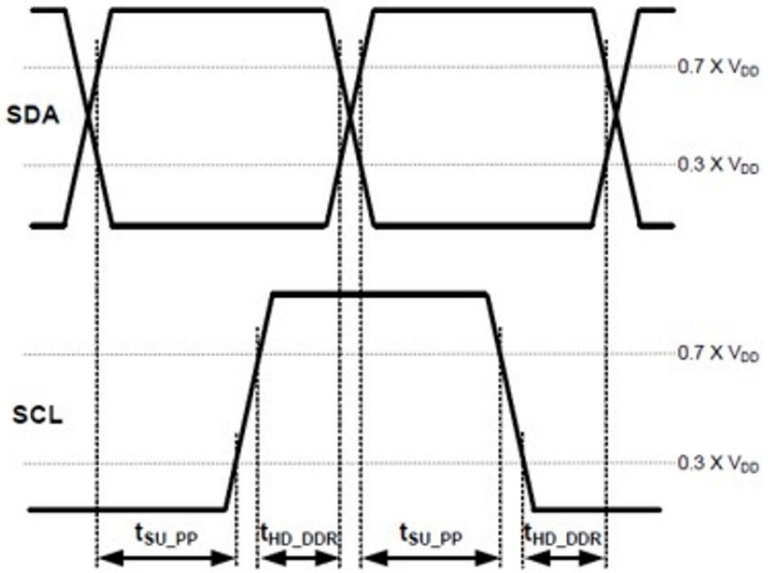

Figure 3-20 Push Pull mode master DDR mode timing diagram

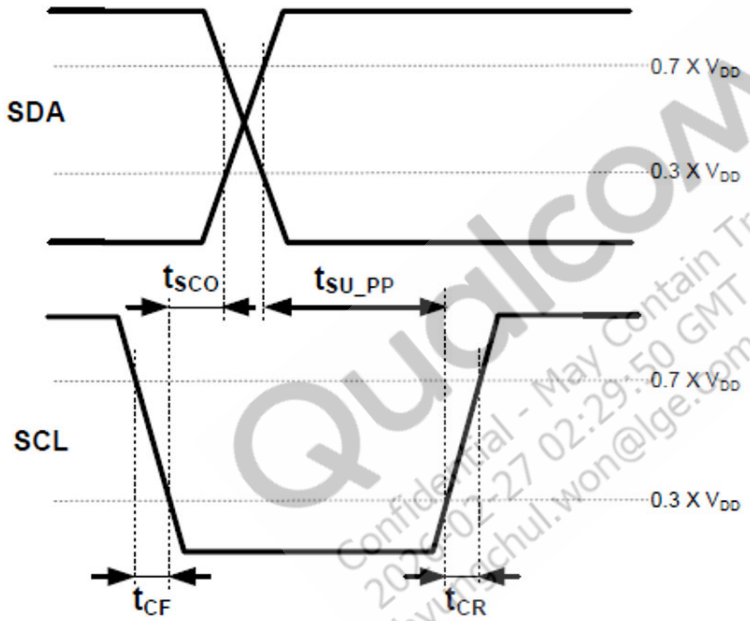

Figure 3-21 I³C slave out timing

Qualcomm Confidential - May Contain Trade Secrets 2026-02-27 02:29:50 GMT hyunchul.won@lge.com

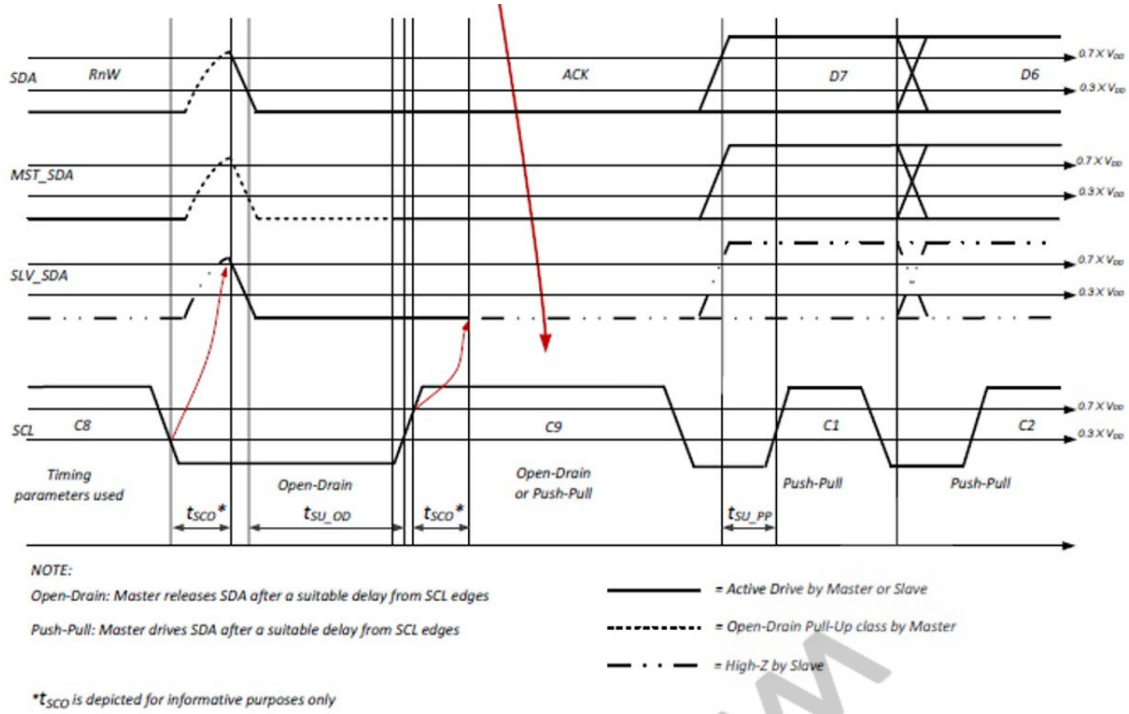

Figure 3-22 Open Drain mode timing diagram

Table 3-27 AC timing parameters: I³C master timing except instances of SSC se8 and se9

Symbol	Parameter	Min	Typ	Max	Units	Comments
fSCL	SCL clock frequency	0.01	12.5	12.9	MHz	–
tSU	SDA signal data setup time	13	–	–	ns	–
tHD	SDA signal data hold time	15	–	–	ns	–
tSCO	Clock IN to data out for slave	–	–	12	ns	Only supports slave mode

NOTE Maste rat 12.5 MHz for PP mode and 1 MHz for OD mode.

3.8 Memory support

The EBI0 port is dedicated to the PoP LPDDR5x SDRAM memory that is attached to the top of the SW6100/SW6100P chipset.

3.9 Multimedia

Multimedia parameters requiring performance specification are addressed in this section.

3.9.1 Camera interfaces

The SW6100/SW6100P chipset supports up to 4-lane D-PHY and C-PHY camera interfaces.

Table 3-28 Supported MIPI_CSI standards and exceptions

Applicable standard	Feature exceptions
MIPI Alliance Specification for D-PHY v1.2	Dependency 2.5 Gbps/lane
MIPI Alliance Specification for C-PHY v1.0	Dependency 2.5 Gbps/Trio

Qualcomm Confidential – May Contain Trade Secrets 2026-02-27 02:29:50 GMT hyungchul.won@lge.com

3.9.2 Audio support

The following audio interfaces are supported with SW6100/SW6100P:

- Digital microphone PDM interface
- SLIMbus interface
- PCM/TDM interfaces

3.9.3 Display support

The SW6100/SW6100P chipset supports up to one 4-lane D-PHY display.

Table 3-29 Supported MIPI_DSI standards and exceptions

Applicable standard	Feature exceptions
MIPI-DSI D-PHY v1.2 port	Supports upto 2.5 Gbps/lane

3.10 Connectivity

The connectivity functions supported by the SW6100/SW6100P that require electrical specifications include:

- SD, multimedia cards (MMC)
- Digital microphone (PDM) interface
- SoundWire (SWR) interface
- Serial low-power inter-chip media bus (SLIMbus) interface
- Inter-IC sound (I^2S) interfaces
- Pulse-coded modulation (PCM) interfaces
- Time-division multiplexing (TDM) interfaces
- Built-in USB physical layer (PHY)
- Through proper configuration of the QUP ports:
  - Universal asynchronous receiver/transmitter (UART) ports
  - Inter-integrated circuit interfaces (I^2C and I^3C)
  - Serial peripheral interface (SPI) ports
  - Dedicated I^2C interfaces for camera (CCI I^2C)

Pertinent specifications for these functions are detailed in the following subsections. In addition to the following hardware specifications, see the latest software release notes for software-based performance features or limitations.

3.10.1 USB interfaces

Table 3-30 Supported USB standards and exceptions

Applicable standard	Feature exceptions
Universal Serial Bus Specification, Revision 2.0 (August 11, 2014 or later)	Host mode and OTG is not supported

Qualcomm Confidential - May Contain Trade Secrets 2025-02-27 02:29:50 GMT hyungbul.won@lge.com

3.10.2 UIM interface

Table 3-31 Supported UIM standards and exceptions

Applicable standard	Feature exceptions
ISO/IEC 7816-3	Class A

3.10.3 Digital microphone PDM interface

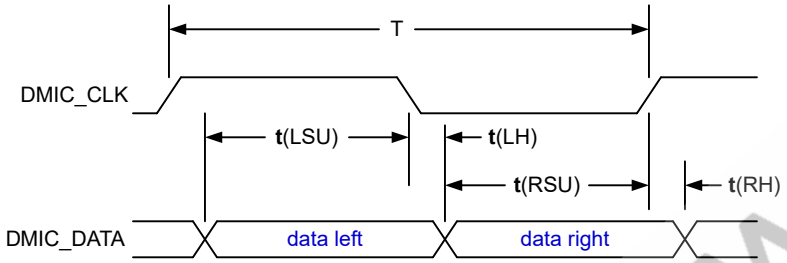

Figure 3-23 Digital microphone PDM interface timing

Table 3-32 Digital microphone timing

Parameter		Min	Typ	Max	Unit
1/T	DMIC clock frequency	0.6	–	12.288	MHz
	DMIC clock duty cycle	45	–	55	%
t(LSU)	Data left setup time to clock falling edge	10	–	–	ns
t(LH)	Data left hold time to clock falling edge	0	–	–	ns
t(RSU)	Data right setup time to clock rising edge	10	–	–	ns
t(RH)	Data right hold time to clock rising edge	0	–	–	ns

3.10.4 SLIMbus interface

Table 3-33 Supported SLIMbus standards and exceptions

Applicable standard	Feature exceptions
MIPI Alliance Specification for Serial Low-power Interchip Media Bus Version 2.0	None

Qualcomm Confidential – May Contain Trade Secrets 2026-02-27 22:29:50 GMT hyungchul.kim@lge.com

3.10.5 PCM/TDM interfaces

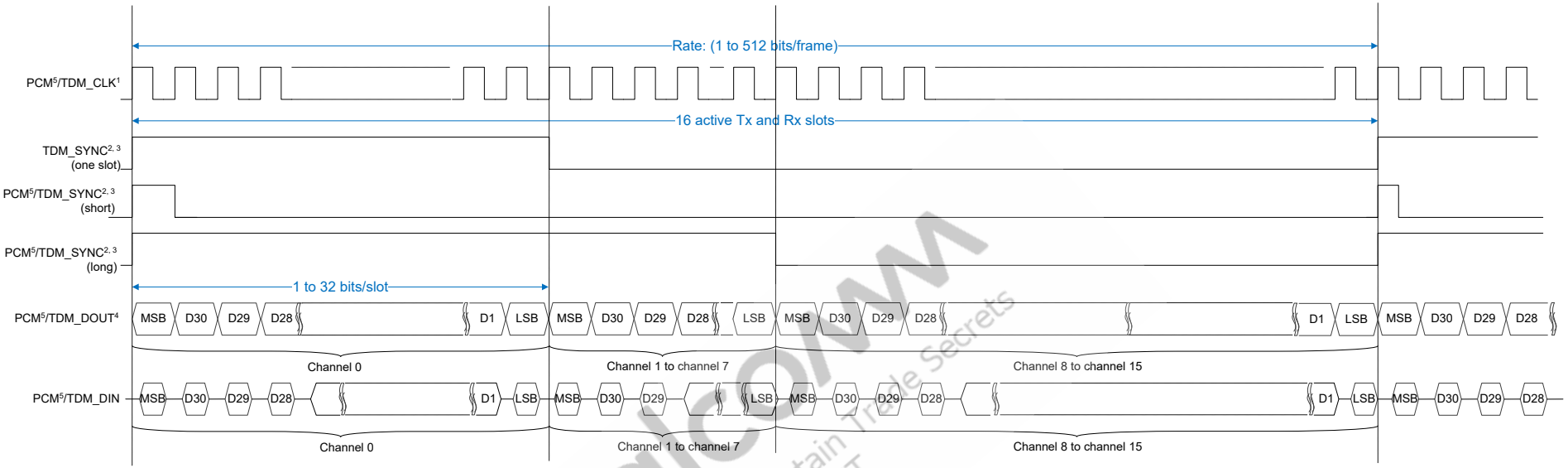

32 bits/slot; 512 bits/frame; 0 frame sync delay; 16 active Tx and Rx slots (TDM interface) or mono channel (PCM interface)

Notes:

1. Internal clock can also be inverted (180 degrees out of phase) relative to the external clock.
2. Frame sync signal can also be inverted.
3. Supports 0 to 2 cycle delays between the frame sync pulse edge and PCM_DOUT/DIN data.
4. PCM data per slot can be smaller or equal to the slot size:
   - If data size < slot size, remaining data bits are padded with zeroes.
   - If data size > slot size, extra data bits will be ignored.
5. PCM audio interface:
   - Supports only mono channel.
   - Does not support one-slot mode.
   - PCM_SYNC period is equivalent to 1 frame.

Qualcomm Confidential - May Contain Trade Secrets 2026-02-27 02:29:50 GMT hyungchul.won@lge.com

Figure 3-24 PCM/TDM audio format with different sync modes

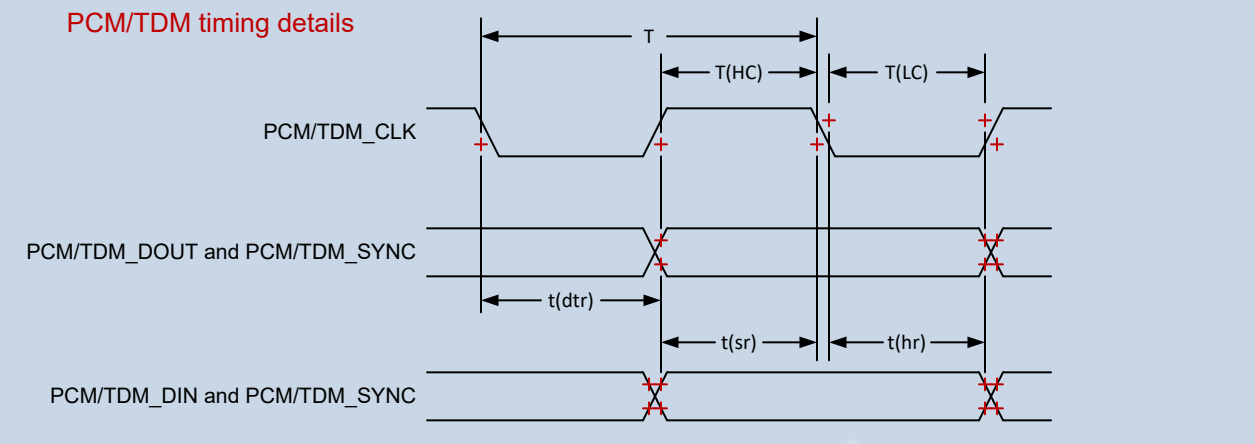

Figure 3-25 PCM/TDM timing diagram

Table 3-34 PCM/TDM interface timing parameters

Parameter [a]		Min	Max	Unit
Master mode				
Frequency		N/A	24.576	MHz
T	Clock period	40.69	N/A	ns
t(HC)	Clock high	0.45 × T	0.55 × T	ns
t(LC)	Clock low	0.45 × T	0.55 × T	ns
t(sr)	PCM/TDM_DIN and PCM/TDM_SYNC setup time	8.14	N/A	ns
t(hr)	PCM/TDM_DIN and PCM/TDM_SYNC hold time	1.5	N/A	ns
t(dtr)	PCM/TDM_DOUT and PCM/TDM_SYNC output delay	N/A	8.14	ns
Slave mode				
Frequency		N/A	24.576	MHz
T	Clock period	40.69	0.60 × T	ns
t(HC)	Clock high	0.45 × T	0.55 × T	ns
t(LC)	Clock low	0.45 × T	0.55 × T	ns
t(sr)	PCM/TDM_DIN and PCM/TDM_SYNC setup time	8.14	N/A	ns
t(hr)	PCM/TDM_DIN and PCM/TDM_SYNC hold time	1.5	N/A	ns
t(dtr)	PCM/TDM_DOUT and PCM/TDM_SYNC output delay	N/A	8.14	ns

[a] Load capacitance is between 10 pF to 40 pF.

Qualcomm Confidential – May Contain Trade Secrets 2026-02-27 02:29:50 GMT hyungchul.won@lge.com

3.11 Internal functions

Some internal functions require external interfaces to enable their operation. These include clock generation, modes and resets, and JTAG functions.

3.11.1 Clocks

Clocks that are specific to particular functions are addressed in the corresponding sections of this document. Others are specified here.

3.11.1.1 19.2 MHz CXO input

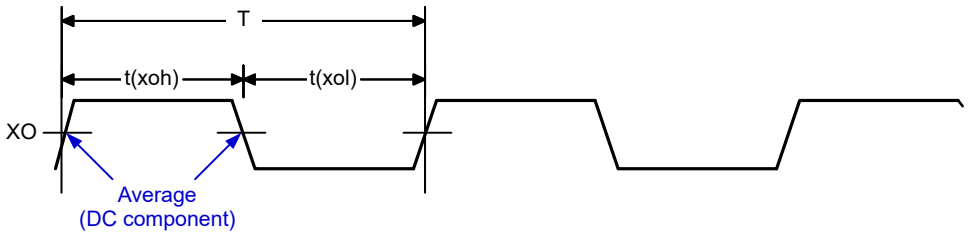

Figure 3-26 XO timing parameters

Table 3-35 CXO timing parameters

Parameter		Comments [a]	Min	Typ	Max	Unit
t(xoh)	XO logic high	–	22.6	–	29.5	ns
t(xol)	XO logic low	–	22.6	–	29.5	ns
T	XO clock period	–	–	52.083	–	ns
1/T	Frequency	19.2 MHz must be used	–	19.2	–	MHz

[a] For more information, see PMIC Data Sheets, *PW6100-0 Data Sheet (80-83960-1)* and *PW6100-1 Data Sheet (80-83961-1)*.

3.11.1.2 Sleep clock

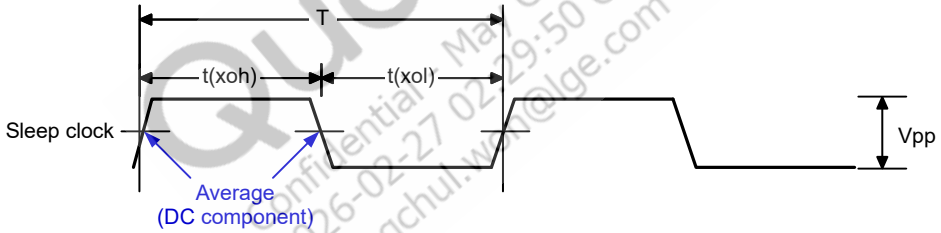

Figure 3-27 Sleep-clock timing parameters

Table 3-36 Sleep-clock timing parameters

Parameter		Comments	Min	Typ	Max	Unit
t(xoh)	Sleep-clock logic high	–	4.58	–	25.94	µs
t(xol)	Sleep-clock logic low	–	4.58	–	25.94	µs
T	Sleep-clock period	–	–	30.518	–	µs
F	Sleep-clock frequency	F = 1/T	–	32.768	–	kHz
Vpp	Peak-to-peak voltage	–	–	1.8	–	V

Qualcomm Confidential – May Contain Trade Secrets 2026-02-27 02:29:50 GMT hyungchul.wee@lge.com

3.11.2 Modes and resets

Mode and reset functions are basic digital I/Os that meet the performance specifications presented in Digital-logic characteristics.

3.11.3 JTAG

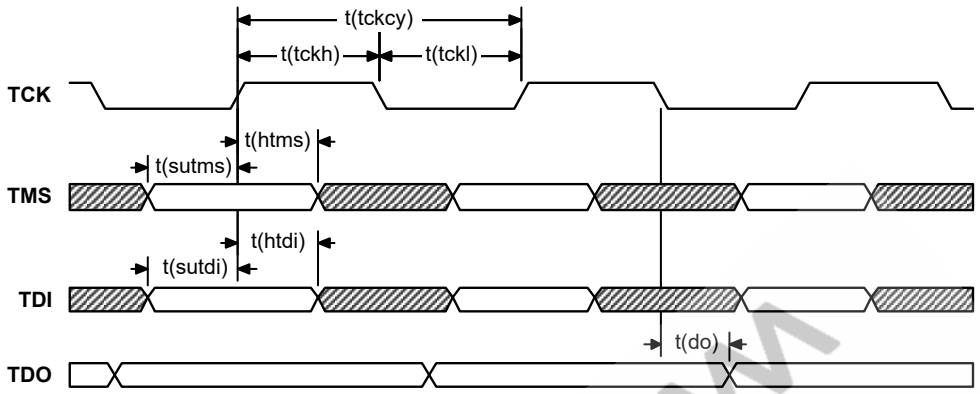

Figure 3-28 JTAG interface timing diagram

Table 3-37 JTAG interface timing characteristics

Parameter		Min	Typ	Max	Unit
t(tckcy)	TCK period	50	–	–	ns
t(tckh)	TCK pulse width high	20	–	–	ns
t(tckl)	TCK pulse width low	20	–	–	ns
t(sutms)	TMS input setup time	5	–	–	ns
t(htms)	TMS input hold time	20	–	–	ns
t(sutdi)	TDI input setup time	5	–	–	ns
t(htdi)	TDI input hold time	20	–	–	ns
t(do)	TDO data output delay	–	–	15	ns

NOTE JTAG clock (TCK) is tested up to 10 MHz.

3.11.4 SWD

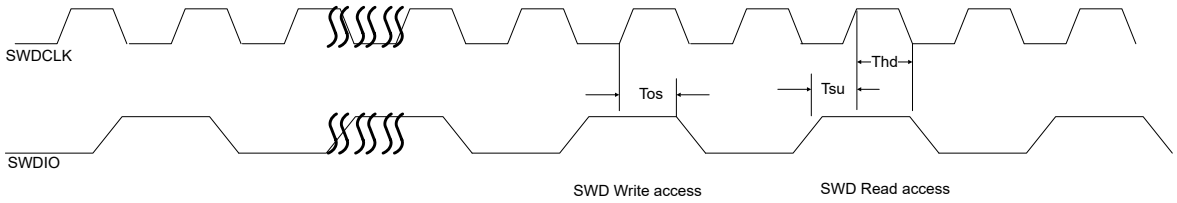

Figure 3-29 SWD write and read AC timing diagram

Qualcomm Confidential - May Contain Trade Secrets 2020-02-27 02:29:50 GMT hwungchul.won@lge.com

Table 3-38 AC timing parameters

Parameter		Minimum	Maximum	Unit
T_{os}	SWDIO output skew to the rising edge of SWDCLK	-1	17.5	ns
T_{su}	Input setup time between SWDIO and the rising edge of SWDCLK	6.5	–	ns
T_{hd}	Input hold time between SWDIO and the rising edge of SWDCLK	6.5	–	ns

3.12 Power management interface

The digital I/Os must meet the logic-level requirements specified in Digital-logic characteristics.

3.12.1 RF and GRFC interfaces

Table 3-39 Supported RF and GRFC interfaces

Interfaces	Description
RF operating bands	▪ Defined by the RF transceiver SDR125 ▪ 5G NR sub-6 (FR1) SA and multimode 4G LTE
GRFC and RFFE interfaces	13 GRFC and 7 RFFE

3.12.2 System power management interface (SPMI)

Table 3-40 Supported SPMI standards and exceptions

Applicable standard	Feature exceptions
MIPI Alliance Specification for System Power Management Interface (SPMI) version 1.0	None

Qualcomm Confidential - May Contain Trade Secrets 2026-02-27 02:29:50 GMT hyungchul.won@lge.com

4 Mechanical information

4.1 Device physical dimensions

The SW6100-2/SW6100P-2 is available in the MPSP830 that includes dedicated ground pins for improved grounding, mechanical strength, and thermal continuity. The MPSP830 has a 13.0 mm by 8.0 mm body, with a maximum height of 0.48 mm. Pin A1 is located by an indicator mark on the top of the package, and by the ball pattern when viewed from below. A simplified version of the MPSP830 outline drawing is shown in the figure below.

NOTE

- Maximum height specified is exclusive of PoP memory.
- Click the following link to download the Package Outline Drawing:

  Package Outline Drawing, MPSP830, 13.0X8.0X0.48MM, ST94, M102, SB118, NSPPB 210, PL1, MEP
- Make this document a favorite to be notified of any changes.

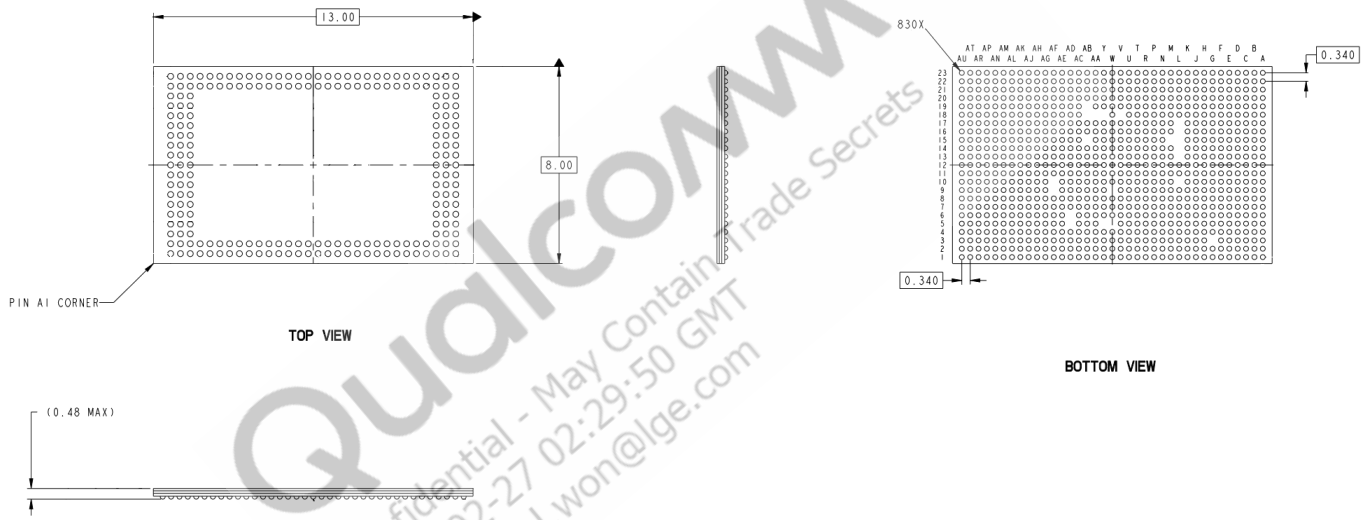

Figure 4-1 MPSP830 outline drawing

This is a simplified outline drawing. Click the above link to download the complete, up-to-date package outline drawing.

Qualcomm Confidential - May Contain Trade Secrets 2025-02-27 02:29:50 GMT hyungchul.won@lge.com

4.2 Part marking

The markings located on the top side of the chip are presented here.

Device marking (top view, not to scale)

Table 4-1 Device marking line definitions

Line	Marking	Description
C1	Qualcomm	Qualcomm name or logo
P1	PRODUCT	Qualcomm Technologies, Inc. (QTI) product name ▪ SW6100
P2	VARIANT	Device variant information ▪ See Table 4-3 for the assigned values.
T1	●	Pin1 or pin A1 indicator
	AYWWXXX	A = assembly site code ▪ A = C (Amkor, Korea) ▪ A = X (Amkor, Japan) Y= single/last digit of year WW = two-digit work week of year specified by Y XXX = traceability number

Qualcomm Confidential – May Contain Trade Secrets 2026-02-27 02:09:50 GMT hyungchul.wonl@lge.com

4.3 Device ordering information

The Oracle short description is used to order QTI products, and is present on both the customer label and this document. The short description includes the product name, configuration code, package type, product revision code, source code, and feature code/program ID of the part.

This device can be ordered using the identification code shown in the following table.

Table 4-2 Example device identification code

Device ID code	AAA-AAAA	-P	-TTTTTT	NNNN	A	+FF	-EE	-RR	-S	-BB or-PID [a]
Symbol definition	**Product name**	**Configuration code**	**Package type**	**Number of pins**	**Package variable**	**Additional package information**	**Shipping package**	**Product revision**	**Source code**	**Feature code**
Example 1	SW-6100	-2	-MPSP	830			-MT	-00	-0	-AA
Example 2	SW-6100P	-2	-MPSP	830			-MT	-00	-0	-AE

[a] The feature code (BB) and the program ID (PID) are mutually exclusive. A product may have one of them or none of them, but it will never have both. If there is no feature code/program ID, this field is blank, and the Oracle short description ends after the source configuration code (S).

For example:

- Example 1: SW-6100-2-MPSP830-MT-00-0-AA
- Example 2: SW-6100P-2-MPSP830-MT-00-0-AE

NOTE The shipping package is either TR (tape and reel) or MT (matrix tray).

Qualcomm Confidential – May Contain Trade Secrets 2026-02-27 02:29:50 GMT hyungchul.won@[illegible]e.com

4.4 Device identification for each sample type

Table 4-3 Device identification details

Device	Sample type	Variant (PRR-BB) P= product configuration code RR = product revision code BB= feature code (if applicable) [a]	Hardware revision number (JTAG_ID)	Source configuration code (S) [b]	Comments	Sample date
SW6100	ES	200-AA	0x0 030A 0E1	0	SW6100 (200-0-AA), MPSP830, 1 × Arm Cortex-A78 + 4 × Arm Cortex-A55, full scope MEP configuration with modem	06/13/2025
SW6100	Pre-CS Pre-CS date codes are as follows: ▪ Amkor, Korea: 2545 ▪ Amkor, Japan: 2545	200-AE	0x0 030A 0E1	0	SW6100 (200-0-AE), MPSP830, 1 × Arm Cortex-A78 + 4 × Arm Cortex-A55, full scope MEP configuration with 4G LTE, without WearAI, without camera, without NBNTN, without PCIe	12/09/2025
SW6100	CS [c d] CS date codes are as follows: ▪ Amkor, Korea: TBD ▪ Amkor, Japan: TBD	200-AE	0x0 030A 0E1	0	SW6100 (200-0-AE), MPSP830, 1 × Arm Cortex-A78 + 4 × Arm Cortex-A55, full scope MEP configuration with 4G LTE, without WearAI, without camera, without NBNTN, without PCIe	TBD
SW6100P	CS [c d] CS date codes are as follows: ▪ Amkor, Korea: TBD ▪ Amkor, Japan: TBD	200-AE	0x0 030B 0E1	0	SW6100P (200-0-AE), MPSP830, 1 × Arm Cortex-A78 + 4 × Arm Cortex-A55, full scope MEP configuration without modem and SDR125, without WearAI, without camera, without NBNTN, without PCIe	TBD
SW6100	CS [c d] CS date codes are as follows: ▪ Amkor, Korea: TBD ▪ Amkor, Japan: TBD	200-AD	0x0 030A 0E1	0	SW6100 (200-0-AD), MPSP830, 1 × Arm Cortex-A78 + 4 × Arm Cortex-A55, full scope MEP configuration with WearAI, without camera, without PCIe	TBD

[a] BB is the feature code that identifies an IC's specific feature set, which distinguishes it from other versions or variants. Feature sets are detailed in the Comments column.

Qualcomm Confidential - May Contain Trade Secrets 2026-03-27 02:29:50 GMT hyungchul.won@lge.com

[b] S is the source configuration code that identifies all of the qualified die fabrication-source combinations available when the particular sample type was shipped. S values are defined in Table 4-4 .

[c] All devices with YWW date code or later are CS quality. However, devices with earlier date codes may also be CS quality. Contact your customer service representative for CS part marking with date codes prior to YWW.

[d] ES material may be shipped post CS sample date upon customer request.

Table 4-4 Source configuration code

S value	F value = F	A value = C	A value = X
0	TSMC	Amkor, Korea	Amkor, Japan
Other columns and rows will be added in future revisions of this document, if needed.			

Qualcomm Confidential - May Contain Trade Secrets 2026-02-27 02:29:50 GMT hyungchul.won@lge.com

4.5 Thermal characteristics

Rather than providing thermal resistance values θ_{JC} and θ_{JA}, validated thermal package models are provided through. Designers can extract thermal resistance values by conducting their own thermal simulations.

NOTE Click the following links to download the SW6100-2/SW6100P-2 thermal models:

SW6100_2 Package Thermal Model Icepak (HS11-83952-5HW)

SW6100_2 Package Thermal Model Flotherm (HS11-83952-6HW)

Qualcomm
Confidential - May Contain Trade Secrets
2026-02-27 02:29:50 GMT
hyungchul.won@lge.com

5 Carrier, storage, and handling information

5.1 Manufacturers date code

QTI's manufacturing date code has no impact on usage, quality, or reliability of products due to advancements in our technology, materials, manufacturing methods, and logistics. Any material shipped to customers is subject to QTI standard terms and conditions.

5.2 Carrier

5.2.1 Tape and reel information

All QTI tape carrier systems conform to EIA-481 standards.

A simplified sketch of the SW6100-2/SW6100P-2 tape carrier is shown in the following figure, including the proper part orientation, maximum number of devices per reel, and key dimensions.

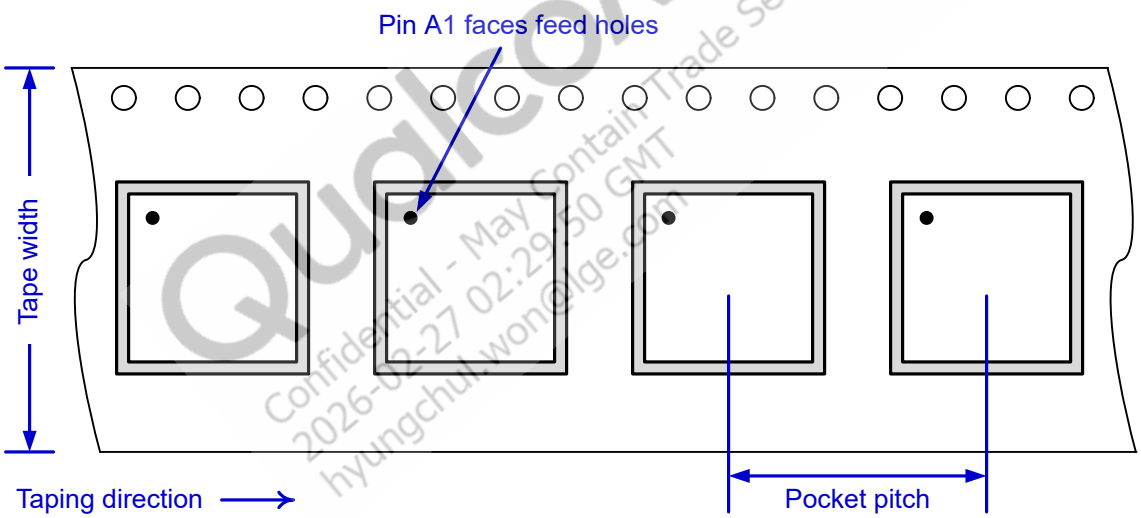

Tape feed:	Single	Reel diameter:	330 mm	Tape width:	24 mm
Units per reel:	2000	Hub diameter:	178 mm	Pocket pitch:	12 mm

Figure 5-1 Carrier tape drawing with part orientation

Qualcomm Confidential - May Contain Trade Secrets 2026-02-27 02:29:50 GMT hyungchul.won@lge.com

Tape-handling recommendations are shown in the following figure.

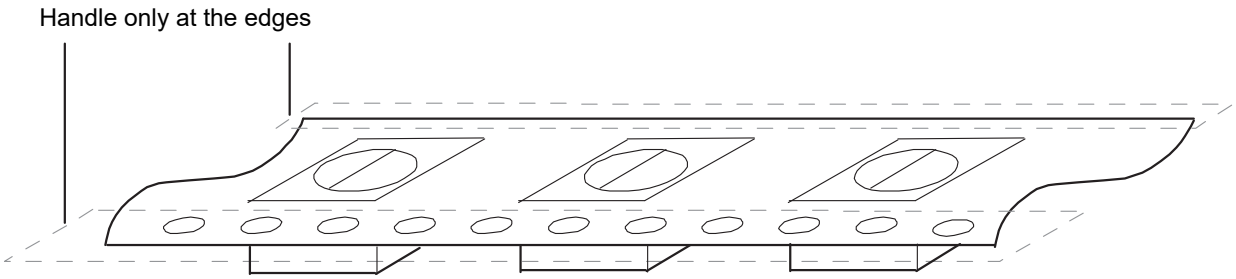

Figure 5-2 Tape handling

5.2.2 Matrix tray information

All QTI matrix tray carriers confirm to JEDEC standards.

The device pin 1 is oriented to the chamfered corner of the matrix tray. Each tray of the SW6100-2/SW6100P-2 contains up to 180 devices. Production orders of the SW6100-2/SW6100P-2 that are shipped in matrix tray carriers will be in [10 + 1] tray stacks of [1800] units. The stacking configuration and quantity for sample orders will vary. See the following figure for matrix-tray key attributes and dimensions.

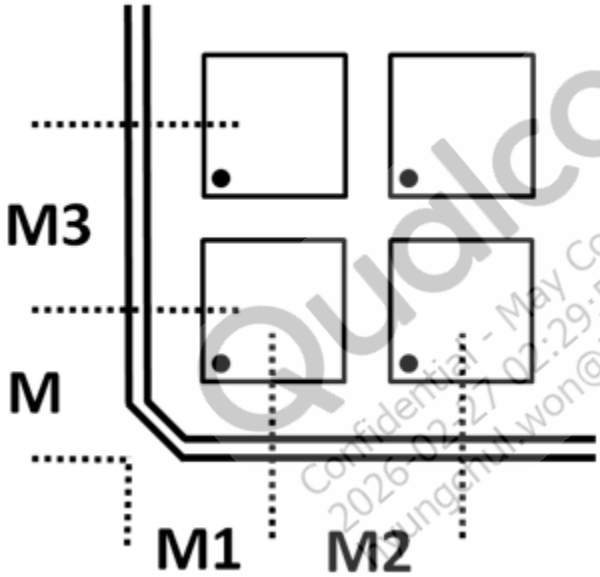

Qualcomm Confidential - May Contain Trade Secrets 2026-02-27 02:29:50 GMT youngchul.won@lge.com

Figure 5-3 Matrix-tray key attributes and dimensions

Table 5-1 Matrix tray key dimensions

Key dimensions	
Array	10 × 17 (170)
M	10.35 mm
M1	12.70 mm
M2	18.10 mm
M3	12.80 mm

5.3 Device moisture sensitivity level

Plastic-encapsulated surface mount packages are susceptible to damage induced by absorbed moisture and high temperature. A package's moisture sensitivity level (MSL) indicates its ability to withstand exposure after it is removed from its shipment bag, while it is on the factory floor awaiting PCB installation. A low MSL rating is better than a high rating; a low MSL device can be exposed on the factory floor longer than a high MSL device. All pertinent MSL ratings are summarized in the following table.

Table 5-2 MSL ratings summary

MSL	Out-of-bag floor life	Comments
1	Unlimited	≤ 30°C/85% RH
2	1 year	≤ 30°C/60% RH
2a	4 weeks	≤ 30°C/60% RH
3	168 hours	≤ 30°C/60% RH **SW6100-2/SW6100P-2 rating**
4	72 hours	≤ 30°C/60% RH
5	48 hours	≤ 30°C/60% RH
5a	24 hours	≤ 30°C/60% RH
6	Mandatory baking before use. After baking, must be reflowed within the time limit specified on the label.	≤ 30°C/60% RH

QTI follows the latest IPC/JEDEC J-STD-020 standard revision for moisture-sensitivity qualification. The SW6100-2/SW6100P-2 devices are classified as MSL3; the qualification temperature was 260 +0/-5°C. This qualification temperature (260 +0/-5°C) should not be confused with the peak temperature within the recommended solder reflow profile.

Qualcomm Confidential - May Contain Trade Secrets 2026-02-27 02:29:50 GMT hyunchul.won@lge.com

5.4 Storage

5.4.1 Bagged storage conditions

SW6100-2/SW6100P-2 devices delivered in tape and reel carriers must be stored in sealed, moisture barrier, antistatic bags. See the *IC Products Packing Method document* (80-VK055-1) for the expected shelf life.

5.4.2 Out-of-bag duration

The out-of-bag duration is the time a device can be on the factory floor before being installed onto a PCB. It is defined by the device MSL rating, as described in Device moisture sensitivity level.

5.5 Handling

Tape handling was described in Tape and reel information. Other (IC-specific) handling guidelines are presented in the following subsections.

5.5.1 Baking

It is not necessary to bake the SW6100-2/SW6100P-2 if the conditions specified in Bagged storage conditions and Out-of-bag duration have not been exceeded.

It is necessary to bake the SW6100-2/SW6100P-2 if any condition specified in Bagged storage conditions or Out-of-bag duration has been exceeded. The baking conditions are specified on the moisture-sensitive caution label attached to each bag; see the *IC Products Packing Method* (80-VK055-1) document for details.

CAUTION: If baking is required, the devices must be transferred into trays that can be baked to at least 125°C. Devices should not be baked in tape and reel carriers at any temperature.

5.5.2 Electrostatic discharge

Electrostatic discharge (ESD) occurs naturally in laboratory and factory environments. An established high-voltage potential is always at risk of discharging to a lower potential. If this discharge path is through a semiconductor device, destructive damage may result.

ESD countermeasures and handling methods must be developed and used to control the factory environment at each manufacturing site.

QTI products must be handled according to the ESD Association standard: ANSI/ESD S20.20-1999, Protection of Electrical and Electronic Parts, Assemblies, and Equipment.

5.6 Bar code label and packing for shipment

See the *IC Products Packing Method* (80-VK055-1) document for all packing-related information, including bar code label details.

Qualcomm
Confidential - May Contain Trade Secrets
2026-02-27 02:29:50 GMT
hyungchul.won@lge.com

6 PCB mounting guidelines

6.1 RoHS compliance

The device complies with the requirements of the EU RoHS directive. Its SnAgCu solder balls use SAC125/Ni composition. A product material declaration (PMD) that provides RoHS and other product environmental governance information is published when the data is available.

6.2 SMT assembly guidelines

For recommendations on SMT process development, see the *SMT Assembly Guidelines (SM80-P0982-1)*.

NOTE Click the following link to download the *SMT Assembly Guidelines (SM80-P0982-1)* from the CreatePoint webiste.

https://createpoint.qti.qualcomm.com/search/contentdocument/stream/dcn/SM80-P0982-1

After successfully logging in, the document is downloaded.

NOTE Make this document a favorite to be notified of any changes.

6.3 Daisy chain devices

Daisy chain packages use the same processes and materials as actual products; they are recommended for SMT characterization and board-level reliability testing. The SMT process recommendations described in SMT assembly guidelines can be performed using daisy chain components.

Daisy chain PCB routing recommendations are available for download.

NOTE Click the following link to download the *Daisy Chain Interconnect, MPSP830, 8.0 × 13.0 × 0.48 mm* (DS90-81971-R1) document.

https://docs.qualcomm.com/bundle/DS90-81971-R1/resource/DS90-81971-R1_REV_A_Daisy_Chain_Interconnect__MPSP830__8_0X13_0X0_48MM.pdf

NOTE Make this document a favorite to be notified of any changes.

6.4 Board-level reliability

QTI conducts characterization tests to assess the device's board-level reliability. Board-level reliability data is available for download.

NOTE Click the following link to download the *Board Level Reliability, MPSP830* (BR80-81971-1) document from the website.

https://docs.qualcomm.com/doc/BR80-81971-1/BR80-81971-1_REV_A_Board_Level_Reliability__MPSP830.pdf

NOTE Make this document a favorite to be notified of any changes.

Qualcomm Confidential – May Contain Trade Secrets 2026-02-27 02:29:50 GMT hyunchul.kim@nse.com

6.5 High temperature warpage

QTI measures package warpage across SMT reflow. High temperature warpage data is available for download.

NOTE Click the following link to download the *High Temperature Warpage, MPSP830* (WR80-81971-1) from the website.

https://docs.qualcomm.com/doc/BR80-81971-1/BR80-81971-1_REV_A_Board_Level_Reliability__MPSP830.pdf

After successfully logging on, the document is downloaded.

NOTE Make this document a favorite to be notified of any changes.

Qualcomm Confidential - May Contain Trade Secrets 2026-02-27 02:29:50 GMT hyungchul.won@lge.com

7 Part reliability

7.1 Reliability evaluation summary

SW6100-2/SW6100P-2 reliability evaluation report for the MPSP830 device, foundry source TSMC.

Table 7-1 Silicon reliability results

Tests, standards, and conditions	Sample size	Result
ELFR in DPPM HTOL: JESD22-A108-A (Total samples from three different wafer lots)	231	Pass DPPM < 1000 DPPM [a]
HTOL in FIT (λ) failure in billion device hours HTOL: JESD22-A108-A (Total samples from three different wafer lots)	231	Pass FIT < 50 [a]
Mean time to failure (MTTF) t = 1/λ in million hours (Total samples from three different wafer lots)	231	> 20 [a]
ESD – Human-Body Model (HBM) rating JS001-2017 (Total samples from one wafer lot)	21	Pass ±1 kV
ESD – Charged-Device Model (CDM) rating JS002-2018 (Total samples from one wafer lot)	3	Pass ±250 V, All pins
Latch-up (I-test): EIA/JESD78A Trigger current: ±105 mA; temperature: 95°C (Total samples from one wafer lot)	3	Pass
Latch-up (Vsupply overvoltage): EIA/JESD78A Trigger voltage: Each VDD pin, stress at 1.5 × V_{ddmax} per data sheet; temperature: 95°C (Total samples from one wafer lot)	3	Pass

[a] The cumulative DPPM/FITs from multiple products were under the TSMC, N3 (data leveraged from N3 products).

Table 7-2 Package reliability results

Tests, standards, and conditions	Sample Size Amkor, Korea	Sample Size Amkor, Japan	Result
Moisture Resistance Test (MRT): J-STD-020-C Reflow at 260 +0/-5°C (Total samples from three different assembly lots)	693	693	Pass
Temperature cycle: JESD22-A104 Temperature: -55°C to 125°C; Number of cycles: 500, 1000 Soak time at minimum/maximum temperature: 5–7 minutes	231	231	Pass

Qualcomm Confidential - May Contain Trade Secrets 2026-03-27 02:29:50 GMT hyung-chul.won@lge.com

Table 7-2 Package reliability results (cont.)

Tests, standards, and conditions	Sample Size Amkor, Korea	Sample Size Amkor, Japan	Result
Cycle rate: 2 cycles per hour (cph) Preconditioning: JESD22-A113-C MSL3 , reflow temperature: 260 +0/-5°C (Total samples from three different assembly lots)			
Unbiased highly accelerated stress test: JESD22-A118 130°C/85% RH and 96-hour duration Preconditioning: JESD22-A113-C MSL 3, reflow temperature: 260 +0/-5°C (Total samples from three different assembly lots)	231	231	Pass
Biased highly accelerated stress test: JESD22-A110 130°C/85% RH and 96-hour duration Preconditioning: JESD22-A113-C MSL 3, reflow temperature: 260 +0/-5°C (Total samples from three different assembly lots)	231	231	Pass
High-temperature storage life: JESD22-A103 Temperature 150°C, 500, 1000 hours (Total samples from three different assembly lots)	231	231	Pass
Flammability Note: Flammability test is not required. UL-STD-94 QTI ICs are exempt from the flammability requirements due to their sizes per UL/EN 60950-1, as long as they are mounted on materials rated V-1 or better. Most PWBs onto which QTI ICs mounted are rated V-0 (better than V-1).	N/A	N/A	See the under Note the Tests, standards, and conditions column.
Physical dimensions: JESD22-B100-A Case outline drawing: QTI internal document (Total samples from three different assembly lots at each SAT)	30	30	Pass
Solder ball shear: JESD22-B117 (Total samples from three different assembly lots at each SAT)	30	30	Pass
Internal/External visual (Total samples from three different assembly lots at each SAT)	30	30	Pass

7.2 Qualification sample description

Table 7-3 Device characteristics

Category	Definition
Device name	SW6100-2/SW6100P-2
Package type	MPSP830
Package body size	8.0 mm × 13.0 mm × 0.48 mm
Ball count	830

Qualcomm Confidential – May Contain Trade Secrets 2026-02-27 02:26:50 GMT hyungchul.won@lge.com

Table 7-3 Device characteristics (cont.)

Category	Definition
Ball composition	SAC125/Ni
Fab process	3 nm
Supply sources (fab sites)	TSMC
Assembly sites	Amkor, Korea Amkor, Japan
Solder ball pitch	0.340 mm

Qualcomm
Confidential - May Contain Trade Secrets
2026-02-27 02:29:50 GMT
hyungchul.won@lge.com

8 Samples and known issues

8.1 Sample testing

See Table 4-3 for device identification details for all available samples.

8.1.1 Engineering samples (ES)

These devices undergo limited testing and sometimes have significant feature limitations. They are suitable to assist with PCB development, to conduct board-level electrical evaluation tests, and to explore manufacturing considerations. Engineering samples should not be used for product-level qualification.

8.1.2 Commercial samples (CS)

These devices undergo full production-level testing, and meet the specifications and features described in the data sheet, except as otherwise noted in this document. They have passed device-level qualification. Commercial samples are suitable for performance testing, and also for product-level production and qualification.

8.2 Compatible software releases

Each sample type is for use with SW6100.LW.1.0 software version.

Table 8-1 Software compatibility for each sample type (PRR value)

SW6100 variant	PRR	Compatible software	Comments
SW6100-2/SW6100P-2	200	SW6100.LW.1.0	N/A

8.3 Known issues

There are no known issues for SW6100-2/SW6100P-2.

Qualcomm
Confidential - May Contain Trade Secrets
2026-02-27 02:29:50 GMT
hyungchul.won@lge.com

9 Revision history

Bars appearing in the margin (as shown here) indicate where technical changes have occurred for this revision. The following table lists the technical content changes for all revisions.

Revision	Date	Description
AA	March 2025	Initial release.
AB	June 2025	■ Added the following tables: ▫ Table 3-1, *Absolute maximum ratings*. ▫ Added Table 3-2, *Operating conditions* ■ *Mechanical information* section: Added the following sub-sections: ▫ *Part marking* ▫ *Device ordering information* ■ *Carrier, storage and handling information*: Added this section. ■ *PCB mounting guidelines*: Added this section ■ *Part reliability*: Added this section. ■ *Samples and known issues*: Added this section.
AC	January 2026	■ Table 1-1 SW6100-2/SW6100P-2 device variants: Added ■ Table 2-2 SW6100-2/SW6100P-2 bottom pin descriptions – General pins: Updated pin descriptions for V6, AL4, L9, AM4, F8, H7. ■ Table 4-3 Device identification details: Added CS sample details. ■ Functional block diagram: Updated ■ Figure 1-2 SW6100P-2 functional block diagram and example application: Updated ■ Figure 2-1 SW6100-2/SW6100P-2 bottom pin assignments: Editorial updates ■ Figure 2-2: Editorial updates ■ Section 3.2 *Operating conditions*: Updated tables ■ Section 3.5 *Power sequencing*: Updated high level summary ■ Samples and known issues ■ Added the following sections: ▫ Section 3.4 *DC power characteristics* ▫ Section 3.6 *Digital-logic characteristics* ▫ Section 3.7 *Timing characteristics* ▫ Section 3.8 *Memory support* ▫ Section 3.9 *Multimedia* ▫ Section 3.10 *Connectivity* ▫ Section 3.11 *Internal functions* ▫ Section 3.12 *Power management interface* ▫ Section 5.1 *Manufacturers date code* ▫ Daisy chain devices ▫ Section 6.4 *Board-level reliability* ▫ Section 6.5 *High temperature warpage* ▫ Chapter 7 *Part reliability*

Qualcomm Confidential – May Contain Trade Secrets 2026-02-27 02:29:50 GMT hyungsul.yoon@qce.com

LEGAL INFORMATION

Your access to and use of this material, along with any documents, software, specifications, reference board files, drawings, diagnostics and other information contained herein (collectively this "Material"), is subject to your (including the corporation or other legal entity you represent, collectively "You" or "Your") acceptance of the terms and conditions ("Terms of Use") set forth below. If You do not agree to these Terms of Use, you may not use this Material and shall immediately destroy any copy thereof.

1) Legal Notice.

This Material is being made available to You solely for Your internal use with those products and service offerings of Qualcomm Technologies, Inc. ("**Qualcomm Technologies**"), its affiliates and/or licensors described in this Material, and shall not be used for any other purposes. If this Material is marked as "**Qualcomm Internal Use Only**", no license is granted to You herein, and You must immediately (a) destroy or return this Material to Qualcomm Technologies, and (b) report Your receipt of this Material to qualcomm.support@qti.qualcomm.com. This Material may not be altered, edited, or modified in any way without Qualcomm Technologies' prior written approval, nor may it be used for any machine learning or artificial intelligence development purpose which results, whether directly or indirectly, in the creation or development of an automated device, program, tool, algorithm, process, methodology, product and/or other output. Unauthorized use or disclosure of this Material or the information contained herein is strictly prohibited, and You agree to indemnify Qualcomm Technologies, its affiliates and licensors for any damages or losses suffered by Qualcomm Technologies, its affiliates and/or licensors for any such unauthorized uses or disclosures of this Material, in whole or part.

Qualcomm Technologies, its affiliates and/or licensors retain all rights and ownership in and to this Material. No license to any trademark, patent, copyright, mask work protection right or any other intellectual property right is either granted or implied by this Material or any information disclosed herein, including, but not limited to, any license to make, use, import or sell any product, service or technology offering embodying any of the information in this Material.

THIS MATERIAL IS BEING PROVIDED "AS IS" WITHOUT WARRANTY OF ANY KIND, WHETHER EXPRESSED, IMPLIED, STATUTORY OR OTHERWISE. TO THE MAXIMUM EXTENT PERMITTED BY LAW, QUALCOMM TECHNOLOGIES, ITS AFFILIATES AND/OR LICENSORS SPECIFICALLY DISCLAIM ALL WARRANTIES OF TITLE, MERCHANTABILITY, NON-INFRINGEMENT, FITNESS FOR A PARTICULAR PURPOSE, SATISFACTORY QUALITY, COMPLETENESS OR ACCURACY, AND ALL WARRANTIES ARISING OUT OF TRADE USAGE OR OUT OF A COURSE OF DEALING OR COURSE OF PERFORMANCE. MOREOVER, NEITHER QUALCOMM TECHNOLOGIES, NOR ANY OF ITS AFFILIATES AND/OR LICENSORS, SHALL BE LIABLE TO YOU OR ANY THIRD PARTY FOR ANY EXPENSES, LOSSES, USE, OR ACTIONS HOWSOEVER INCURRED OR UNDERTAKEN BY YOU IN RELIANCE ON THIS MATERIAL.

Certain product kits, tools and other items referenced in this Material may require You to accept additional terms and conditions before accessing or using those items.

Technical data specified in this Material may be subject to U.S. and other applicable export control laws. Transmission contrary to U.S. and any other applicable law is strictly prohibited.

Nothing in this Material is an offer to sell any of the components or devices referenced herein.

This Material is subject to change without further notification.

In the event of a conflict between these Terms of Use and the Website Terms of Use on www.qualcomm.com, the *Qualcomm Privacy Policy* referenced on www.qualcomm.com, or other legal statements or notices found on prior pages of the Material, these Terms of Use will control. In the event of a conflict between these Terms of Use and any other agreement (written or click-through, including, without limitation any non-disclosure agreement) executed by You and Qualcomm Technologies or a Qualcomm Technologies affiliate and/or licensor with respect to Your access to and use of this Material, the other agreement will control.

These Terms of Use shall be governed by and construed and enforced in accordance with the laws of the State of California, excluding the U.N. Convention on International Sale of Goods, without regard to conflict of laws principles. Any dispute, claim or controversy arising out of or relating to these Terms of Use, or the breach or validity hereof, shall be adjudicated only by a court of competent jurisdiction in the county of San Diego, State of California, and You hereby consent to the personal jurisdiction of such courts for that purpose.

2) Trademark and Product Attribution Statements.

Qualcomm is a trademark or registered trademark of Qualcomm Incorporated. Arm is a registered trademark of Arm Limited (or its subsidiaries) in the U.S. and/or elsewhere. The Bluetooth® word mark is a registered trademark owned by Bluetooth SIG, Inc. Other product and brand names referenced in this Material may be trademarks or registered trademarks of their respective owners.

Snapdragon and Qualcomm branded products referenced in this Material are products of Qualcomm Technologies, Inc. and/or its subsidiaries. Qualcomm patented technologies are licensed by Qualcomm Incorporated.

THE DOCUMENTATION ACCOMPANYING THE MATERIALS AND/OR RELEVANT PRODUCTS AND SERVICE OFFERINGS MAY INCLUDE IMPORTANT USE LIMITATIONS. ANY DEVIATIONS FROM APPLICABLE USE LIMITATIONS MAY ADVERSELY IMPACT PERFORMANCE, DURABILITY, QUALITY OR SAFETY. YOU ASSUME ALL RISKS AND LIABILITIES ASSOCIATED WITH ANY DEVIATIONS.

Qualcomm Confidential - May Contain Proprietary Info
2026-02-27 02:29:50 GMT
michael.wong@lge.com