Q1

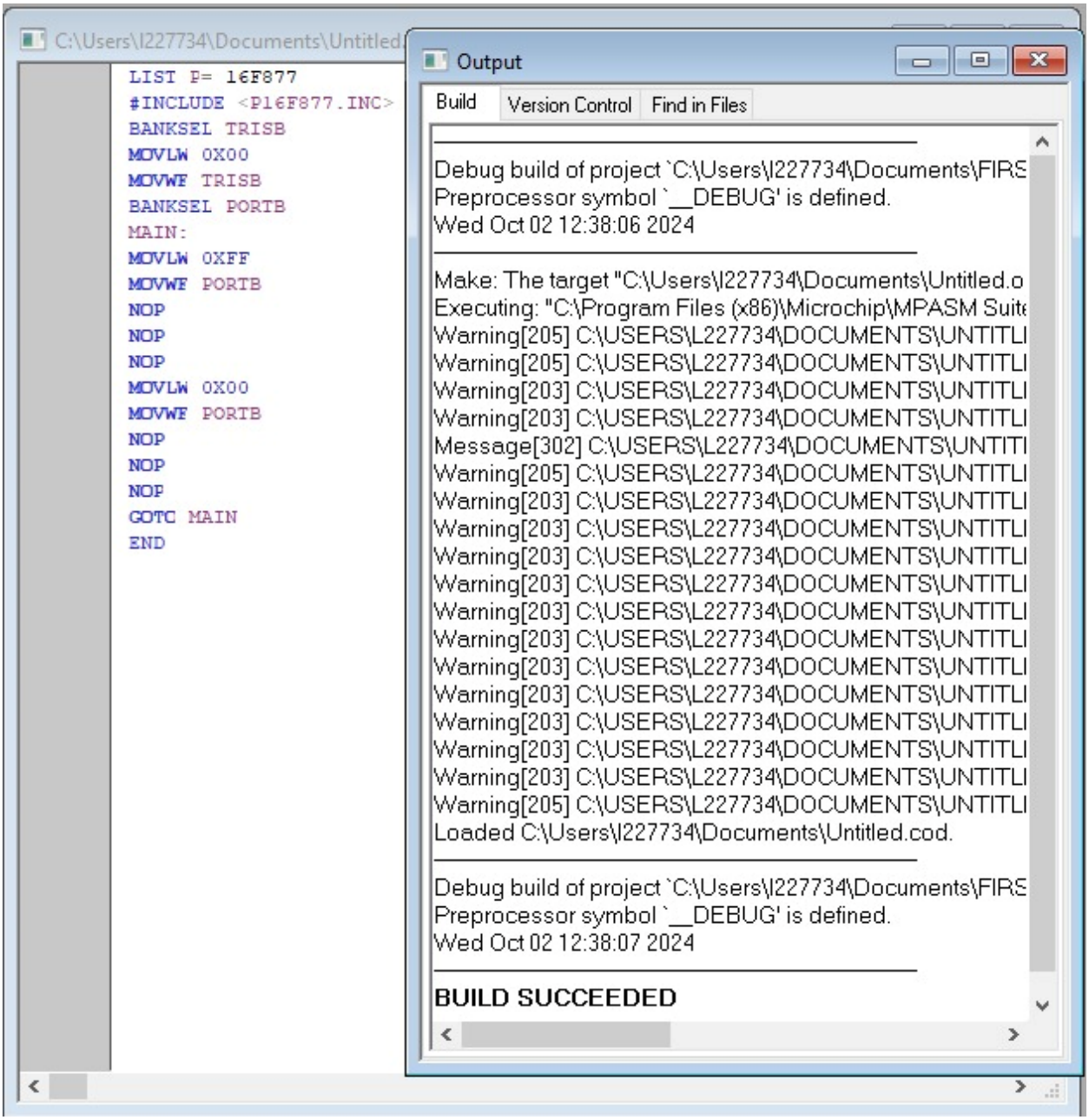
C:\Users\l227734\Documents\Untitled.
LIST P= 16F877
#INCLUDE <P16F877.INC>
BANKSEL TRISB
MOVLW 0X00
MOVWF TRISB
BANKSEL PORTB
MAIN:
MOVLW 0XFF
MOVWF PORTB
NOP
NOP
NOP
MOVLW 0X00
MOVWF PORTB
NOP
NOP
NOP
GOTO MAIN
END
Output
Build
Version Control
Find in Files
Debug build of project `C:\Users\l227734\Documents\FIRS
Preprocessor symbol `__DEBUG' is defined.
Wed Oct 02 12:38:06 2024
Make: The target "C:\Users\l227734\Documents\Untitled.o
Executing: "C:\Program Files (x86)\Microchip\MPASM Suite
Warning[205] C:\USERS\L227734\DOCUMENTS\UNTITLI
Warning[205] C:\USERS\L227734\DOCUMENTS\UNTITLI
Warning[203] C:\USERS\L227734\DOCUMENTS\UNTITLI
Warning[203] C:\USERS\L227734\DOCUMENTS\UNTITLI
Message[302] C:\USERS\L227734\DOCUMENTS\UNTITI
Warning[205] C:\USERS\L227734\DOCUMENTS\UNTITLI
Warning[203] C:\USERS\L227734\DOCUMENTS\UNTITLI
Warning[203] C:\USERS\L227734\DOCUMENTS\UNTITLI
Warning[203] C:\USERS\L227734\DOCUMENTS\UNTITLI
Warning[203] C:\USERS\L227734\DOCUMENTS\UNTITLI
Warning[203] C:\USERS\L227734\DOCUMENTS\UNTITLI
Warning[203] C:\USERS\L227734\DOCUMENTS\UNTITLI
Warning[203] C:\USERS\L227734\DOCUMENTS\UNTITLI
Warning[203] C:\USERS\L227734\DOCUMENTS\UNTITLI
Warning[203] C:\USERS\L227734\DOCUMENTS\UNTITLI
Warning[203] C:\USERS\L227734\DOCUMENTS\UNTITLI
Warning[205] C:\USERS\L227734\DOCUMENTS\UNTITLI
Loaded C:\Users\l227734\Documents\Untitled.cod.
Debug build of project `C:\Users\l227734\Documents\FIRS
Preprocessor symbol `__DEBUG' is defined.
Wed Oct 02 12:38:07 2024
BUILD SUCCEEDED

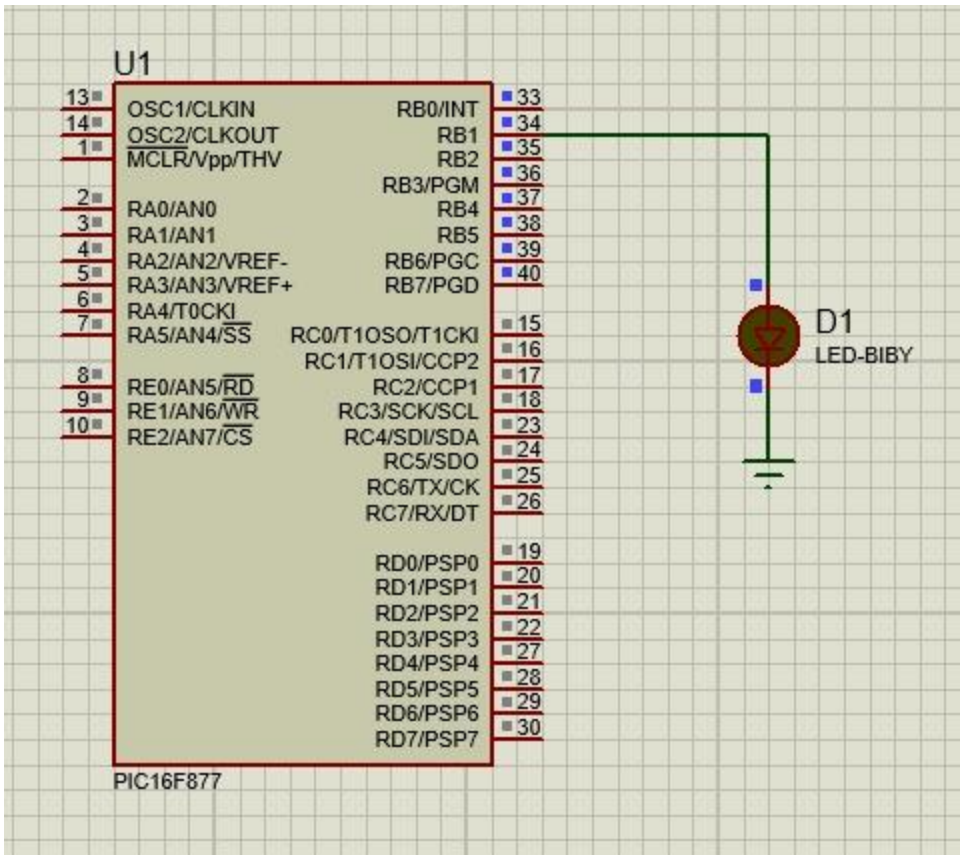
U1
13
14
1
OSC1/CLKIN
OSC2/CLKOUT
MCLR/Vpp/THV
2
3
4
5
6
7
RA0/AN0
RA1/AN1
RA2/AN2/VREF-
RA3/AN3/VREF+
RA4/T0CKI
RA5/AN4/SS
8
9
10
RE0/AN5/RD
RE1/AN6/WR
RE2/AN7/CS
RB0/INT
RB1
RB2
RB3/PGM
RB4
RB5
RB6/PGC
RB7/PGD
33
34
35
36
37
38
39
40
RC0/T1OSO/T1CKI
RC1/T1OSI/CCP2
RC2/CCP1
RC3/SCK/SCL
RC4/SDI/SDA
RC5/SDO
RC6/TX/CK
RC7/RX/DT
15
16
17
18
23
24
25
26
RD0/PSP0
RD1/PSP1
RD2/PSP2
RD3/PSP3
RD4/PSP4
RD5/PSP5
RD6/PSP6
RD7/PSP7
19
20
21
22
27
28
29
30
PIC16F877
D1
LED-BIBY

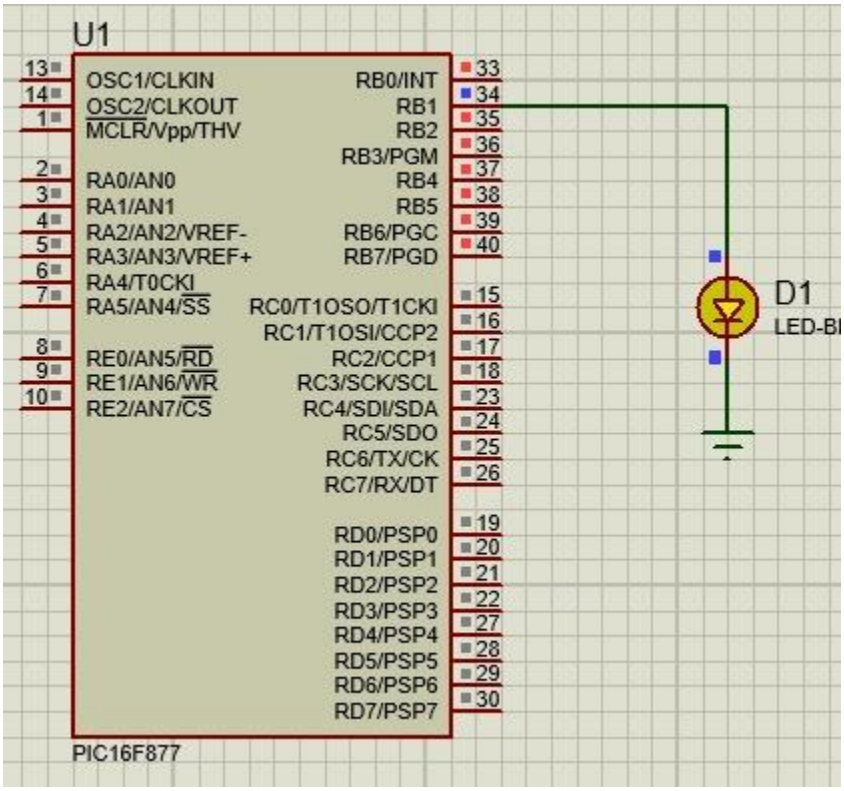
U1
13
14
1
OSC1/CLKIN
OSC2/CLKOUT
MCLR/Vpp/THV
2
3
4
5
6
7
RA0/AN0
RA1/AN1
RA2/AN2/VREF-
RA3/AN3/VREF+
RA4/T0CKI
RA5/AN4/SS
8
9
10
RE0/AN5/RD
RE1/AN6/WR
RE2/AN7/CS
RB0/INT
RB1
RB2
RB3/PGM
RB4
RB5
RB6/PGC
RB7/PGD
33
34
35
36
37
38
39
40
RC0/T1OSO/T1CKI
RC1/T1OSI/CCP2
RC2/CCP1
RC3/SCK/SCL
RC4/SDI/SDA
RC5/SDO
RC6/TX/CK
RC7/RX/DT
15
16
17
18
23
24
25
26
RD0/PSP0
RD1/PSP1
RD2/PSP2
RD3/PSP3
RD4/PSP4
RD5/PSP5
RD6/PSP6
RD7/PSP7
19
20
21
22
27
28
29
30
PIC16F877
D1