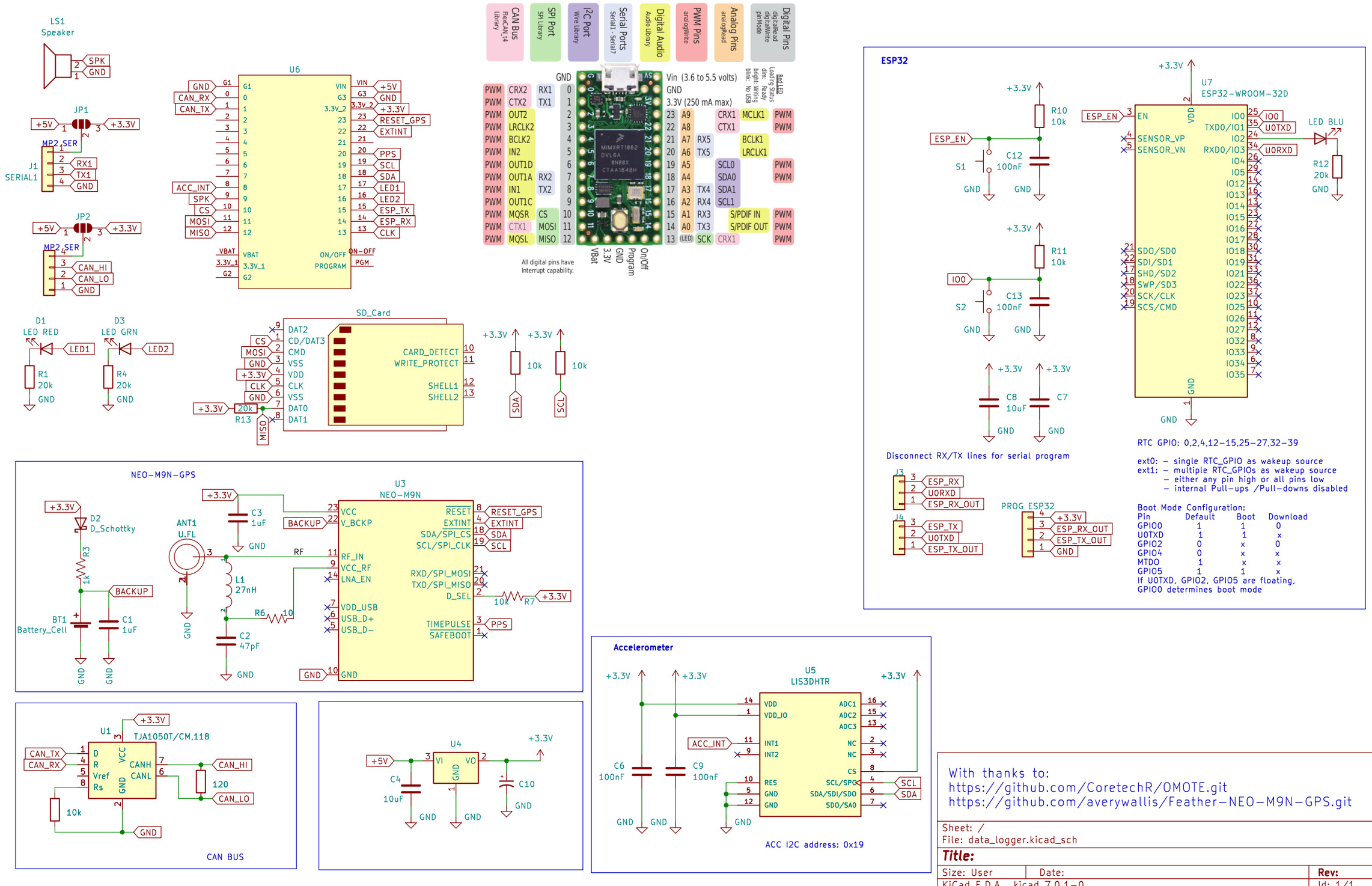

With thanks to:
https://github.com/CoretechR/OMOTE.git
https://github.com/averywallis/Feather-NEO-M9N-GPS.git

Sheet: /
File: data_logger.kicad_sch

Title:

Size: User	Date:	Rev:
KiCad E.D.A. kicad 7.0.1-0		Id: 1/1