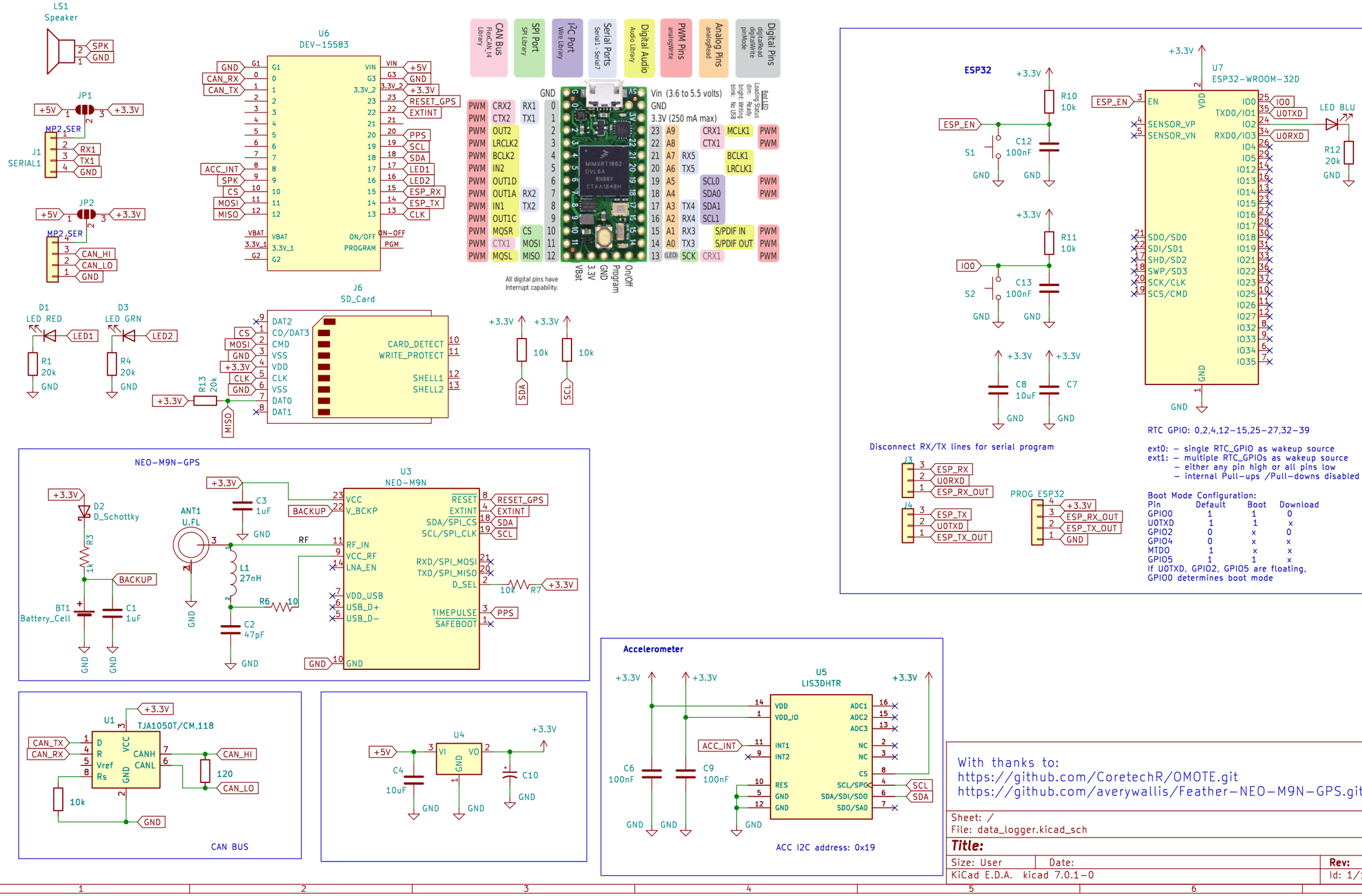
LS1
Speaker
SPK
GND
JP1
+5V
+3.3V
MP2_SER
J1
SERIAL1
RX1
TX1
GND
JP2
CAN_HI
CAN_LO
D1
LED RED
LED1
R1
20k
D3
LED GRN
LED2
R4
U6
DEV-15583
ACC_INT
CS
MOSI
MISO
VBAT
ON/OFF
PROGRAM
PGM
RESET_GPS
EXTINT
PPS
SCL
SDA
ESP_RX
ESP_TX
CLK
J6
SD_Card
DAT2
CD/DAT3
CMD
VSS
VDD
DAT0
DAT1
CARD_DETECT
WRITE_PROTECT
SHELL1
SHELL2
R13
20k
Digital Pins
Digital Audio
PWM Pins
Analog Pins
Serial Ports
SPI Port
I2C Port
CAN Bus
Vin (3.6 to 5.5 volts)
3.3V (250 mA max)
All digital pins have
Interrupt capability.
10k
ESP32
R10
10k
C12
100nF
S1
R11
10k
C13
100nF
S2
C8
10uF
C7
U7
ESP32-WROOM-32D
EN
SENSOR_VP
SENSOR_VN
SDO/SD0
SDI/SD1
SHD/SD2
SWP/SD3
SCK/CLK
SCS/CMD
LED BLU
R12
20k
RTC GPIO: 0,2,4,12-15,25-27,32-39
ext0: - single RTC_GPIO as wakeup source
ext1: - multiple RTC_GPIOs as wakeup source
- either any pin high or all pins low
- internal Pull-ups /Pull-downs disabled
Boot Mode Configuration:
Pin Default Boot Download
GPIO0 1 1 0
U0TXD 1 1 x
GPIO2 0 x 0
GPIO4 0 x x
MTDO 1 x x
GPIO5 1 1 x
If U0TXD, GPIO2, GPIO5 are floating,
GPIO0 determines boot mode
Disconnect RX/TX lines for serial program
J3
ESP_RX_OUT
J4
ESP_TX_OUT
PROG ESP32
NEO-M9N-GPS
U3
NEO-M9N
D2
D_Schottky
R3
1k
BT1
Battery_Cell
C1
1uF
ANT1
U.FL
C3
1uF
L1
27nH
R6
10
C2
47pF
BACKUP
RF
RESET
EXTINT
SDA/SPI_CS
SCL/SPI_CLK
RXD/SPI_MOSI
TXD/SPI_MISO
D_SEL
TIMEPULSE
SAFEBOOT
VCC
V_BCKP
RF_IN
VCC_RF
LNA_EN
VDD_USB
USB_D+
USB_D-
R7
U1
TJA1050T/CM,118
CANH
CANL
Vref
Rs
120
CAN BUS
U4
VI
VO
C4
10uF
C10
Accelerometer
U5
LIS3DHTR
VDD
VDD_IO
INT1
INT2
RES
ADC1
ADC2
ADC3
NC
CS
SCL/SPC
SDA/SDI/SDO
SDO/SA0
C6
100nF
C9
100nF
ACC I2C address: 0x19
With thanks to:
https://github.com/CoretechR/OMOTE.git
https://github.com/averywallis/Feather-NEO-M9N-GPS.git
Sheet: /
File: data_logger.kicad_sch
Title:
Size: User
Date:
Rev:
KiCad E.D.A. kicad 7.0.1-0
Id: 1/1