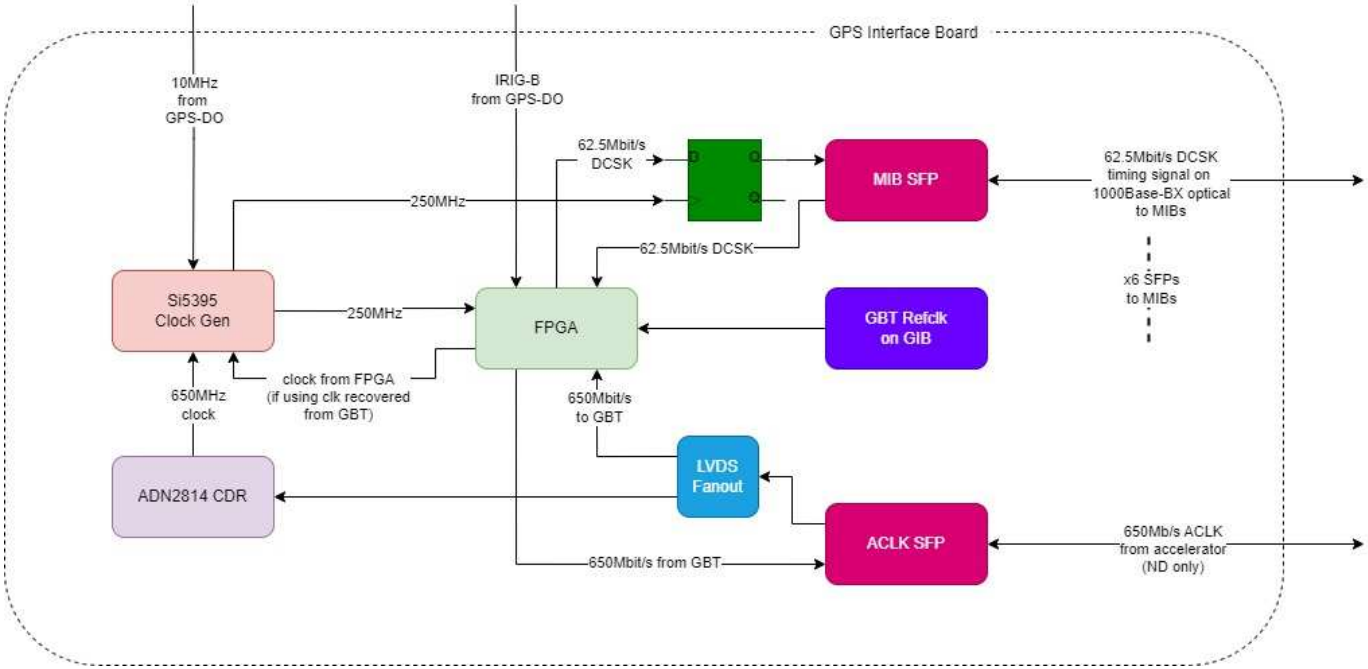

Part	I2C Address
ACLK SFP	0x50
ACLK CDR	0x40
SFP 1	0x50
SFP 2	
SFP 3	
SFP 4	
SFP 5	
SFP 6	

Part	I2C Address
Board ID EEPROM	0x50
SI5395 Clock Gen.	0x68
I2C Extender 1	0x74
I2C Extender 2	0x75
VCC5V Power Monitor	0x67
VCC3V3 Power Monitor	0x6A
VCC2V5 Power Monitor	0x69
I2C Switch	0x70
Temperature Monitor	0x48

Power Estimate			Max Current (mA)				
Part	Description	Occurence	VCC5V	VCC3V3	VCC2V5	VCC1V8	12V Main PWR
LTC6957-2	Sine Wave to LVDS	1		72			
MAX9371	Low Jitter 5V TTL to LVDS	2	16				
SN74avc2t45	5V <--> 3.3V	1	100	100			
SN74avc2t45	3.3V <--> 2.5V	5		100	100		
SI5395	Clock Generator	1		302		300	
LTC2945	Power Monitor	4	1.2				
24AA025E48T	Board ID EEPROM	1		3			
LEDs		13		20			
NB7V52M	Diff. Flip-Flop	6			90		
ADN2814	CDR	6		145			
SFP		6		280			
SN74lvc1g32	OR Gate	12		100			
PCA9539	I2C Extender	2		160			
TCA9548A	I2C Switch	1			100		
LM75A	Temp Monitor	1		20			
NC7SZ08	AND Gate	1		50			
SN65LVDM176	LVDS Transceiver	2		15			
TXB0104(6)	Level Translator	2		100	100		
	Totals	Current (A)	0.14	5.41	1.14	0.30	
		Power (W)	0.68	17.84	3.76	0.54	22.83
	Max Power Supply	Current (A)	2	8			4
		Power (W)	11	28			48

UNIVERSITY OF PENNSYLVANIA
HIGH ENERGY PHYSICS
209 S 33rd Street
Philadelphia PA 19104

Design Title: GPS Interface Board
Schematic Title: 00. GIB Top
Page Title: 01. Address Table

Size	Date:	Document Number:	Rev
B	Thursday, August 29, 2024	<Doc>	<RevCode>
Designer: Jon Sensenig		Sheet: 1 of 23	