Instituto Tecnológico de Aeronáutica
Mestrado Profissional em Engenharia Aeronáutica

AP-701
Fundamentos do Projeto de Aeronaves

Class 6 – Center of Gravity; Stability & Control; Landing Gear; Structures

Cap. Ney Sêcco

Analysis framework

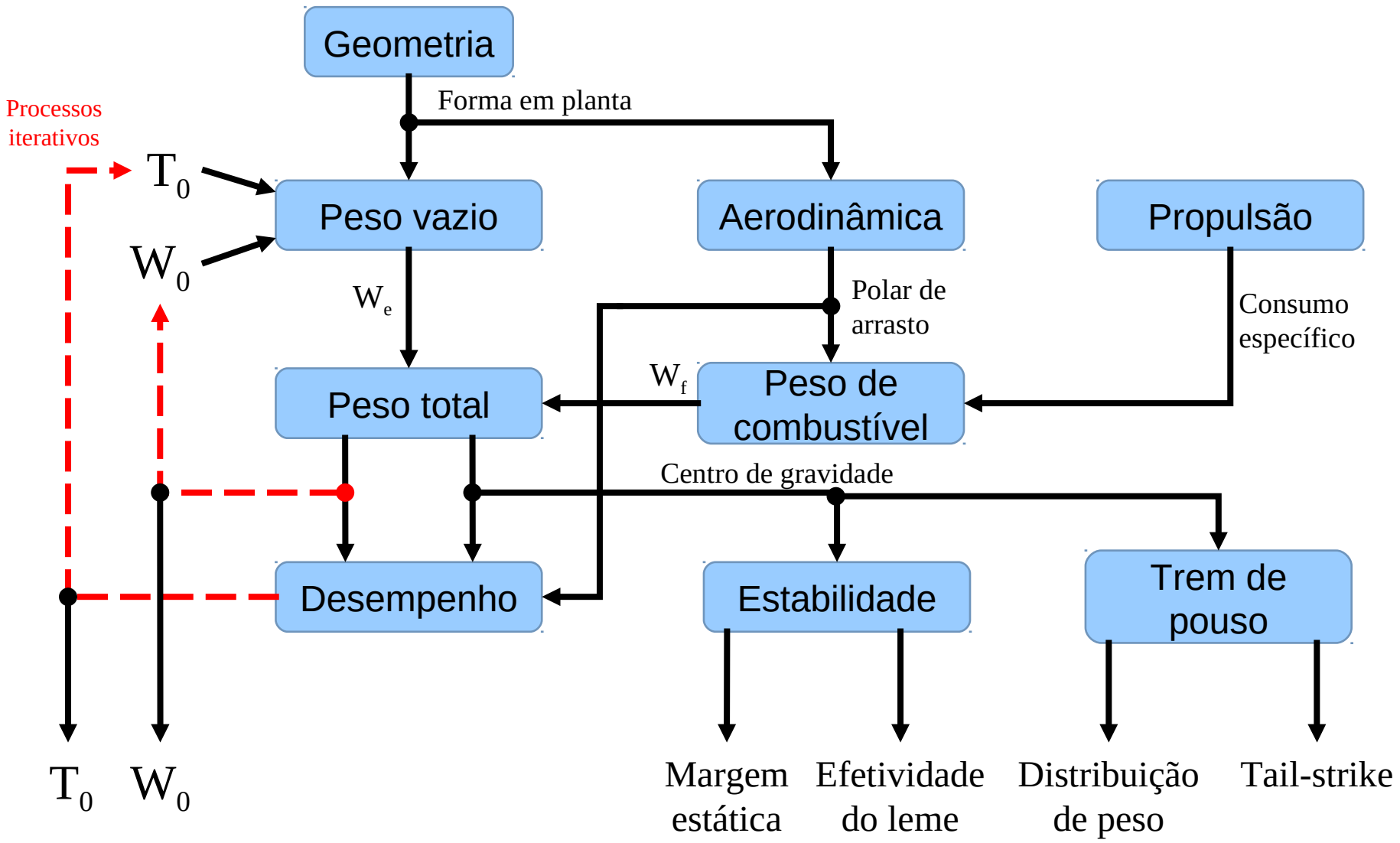

Road map

- Center of Gravity
- Stability & Control
- Landing Gear
- Structures

Road map

- Center of Gravity
- Stability & Control
- Landing Gear
- Structures

Center of Gravity

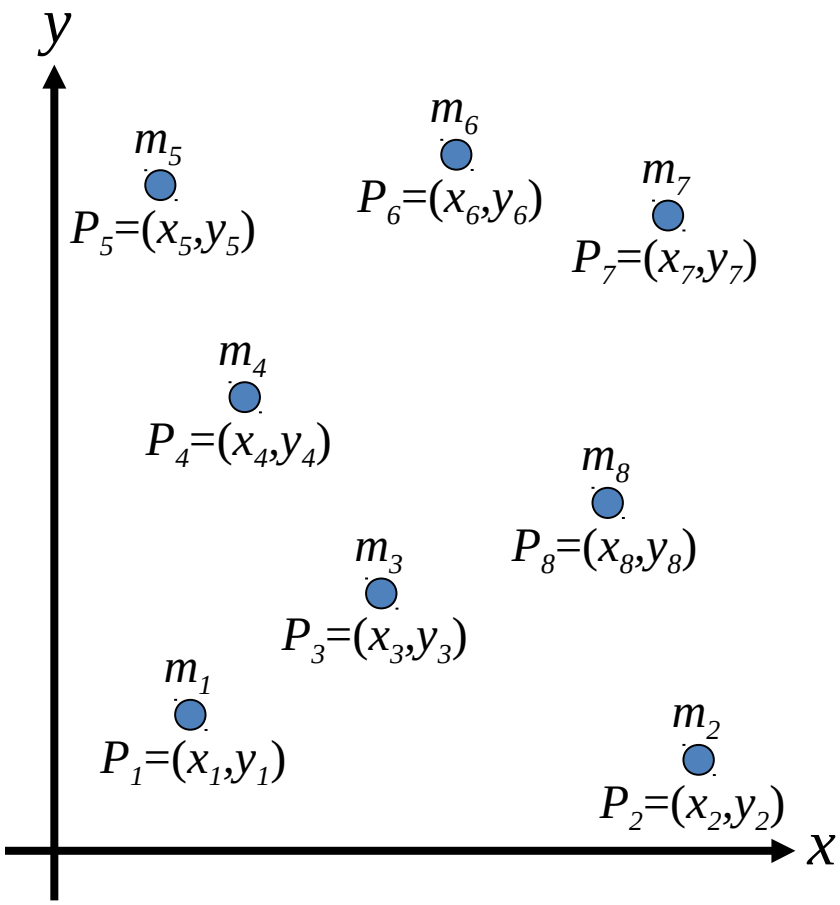

Center of Gravity

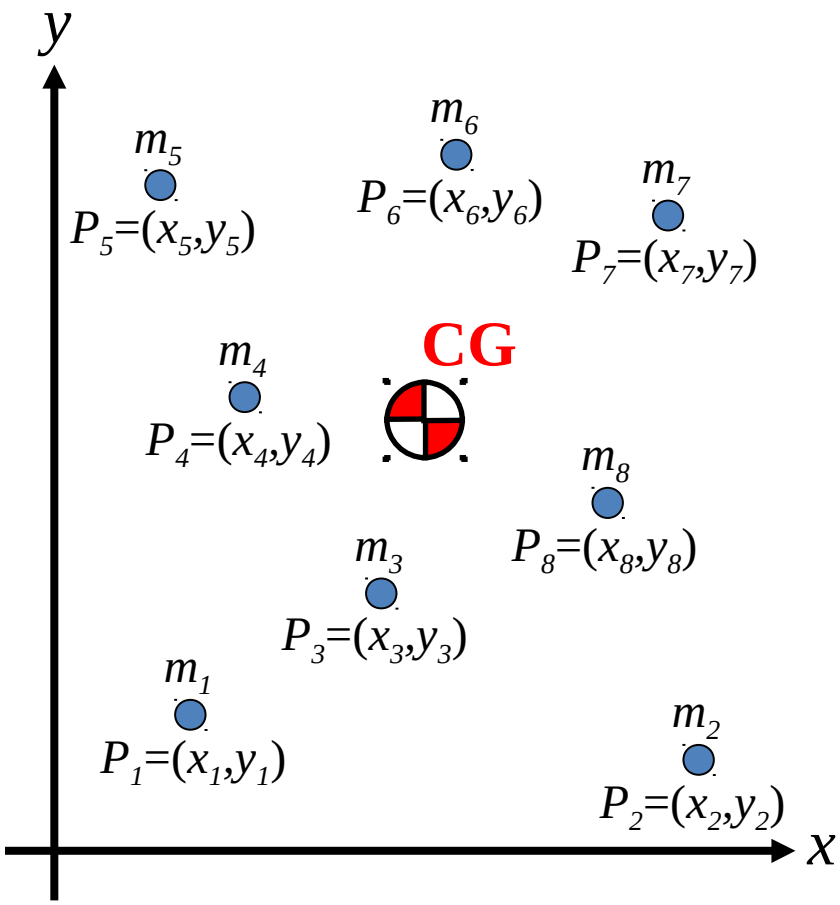

Center of Gravity

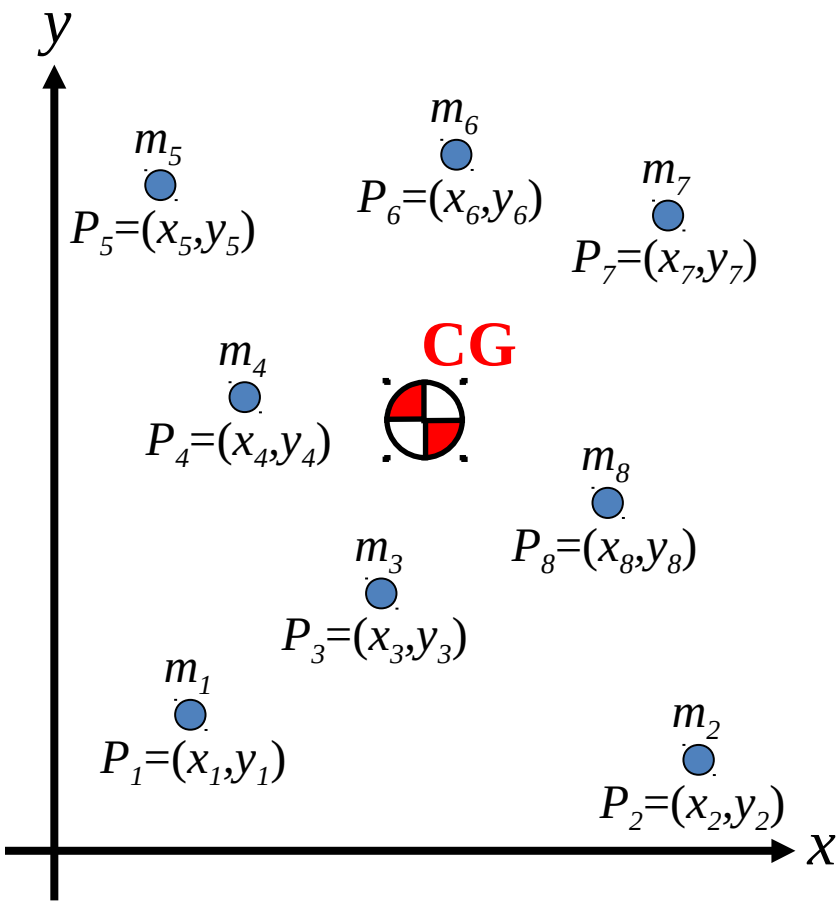

$$CG = \frac{m_1 \cdot P_1 + m_2 \cdot P_2 + \ldots + m_n \cdot P_n}{m_1 + m_2 + \ldots + m_n}$$

Center of Gravity

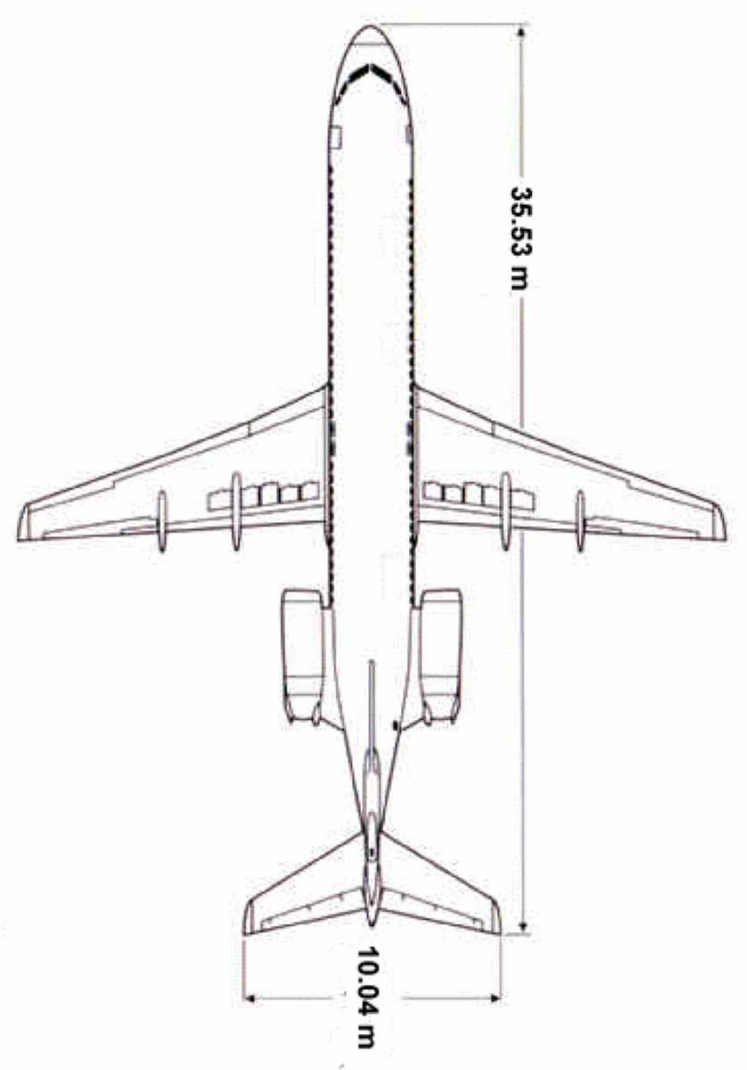

Center of Gravity

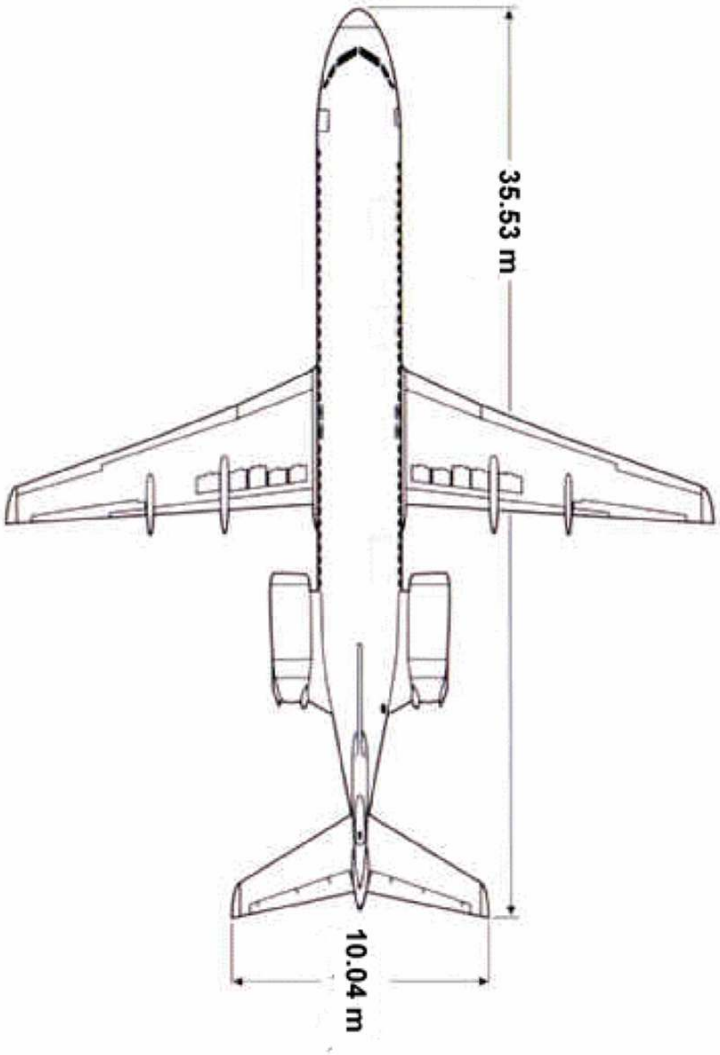

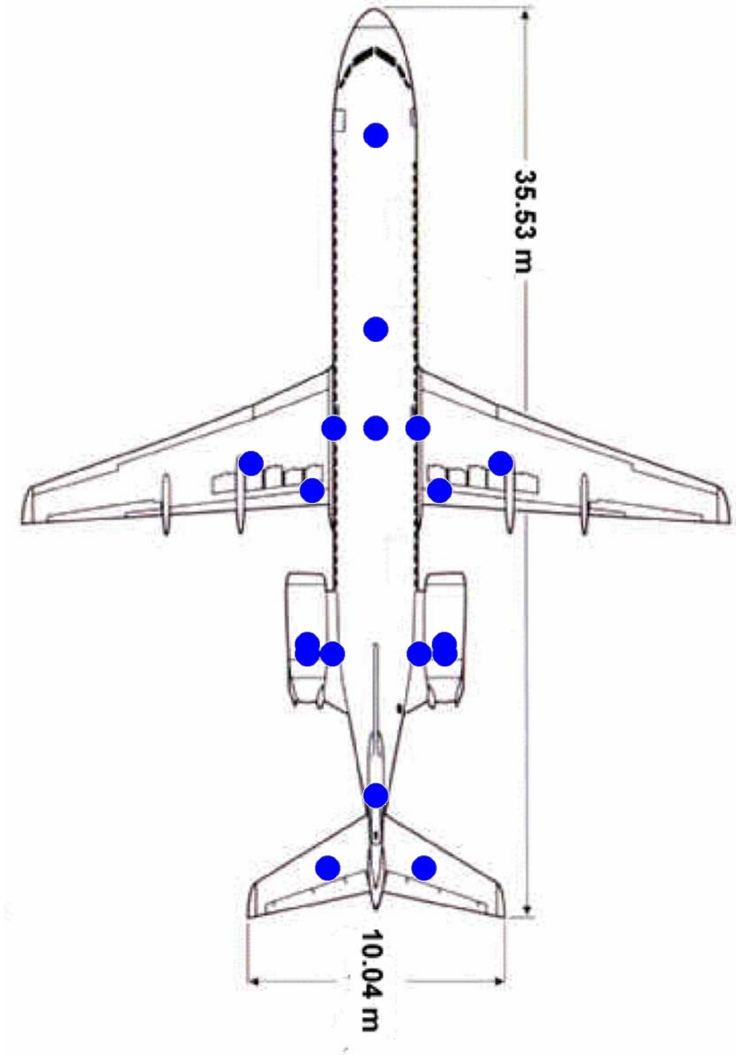

Center of Gravity

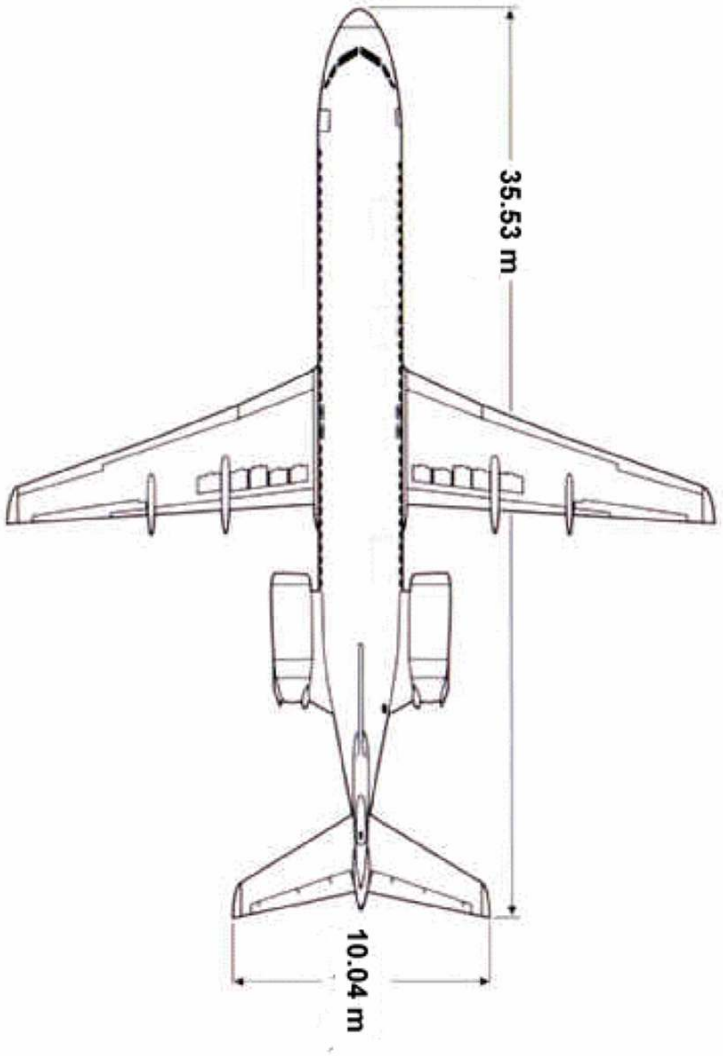

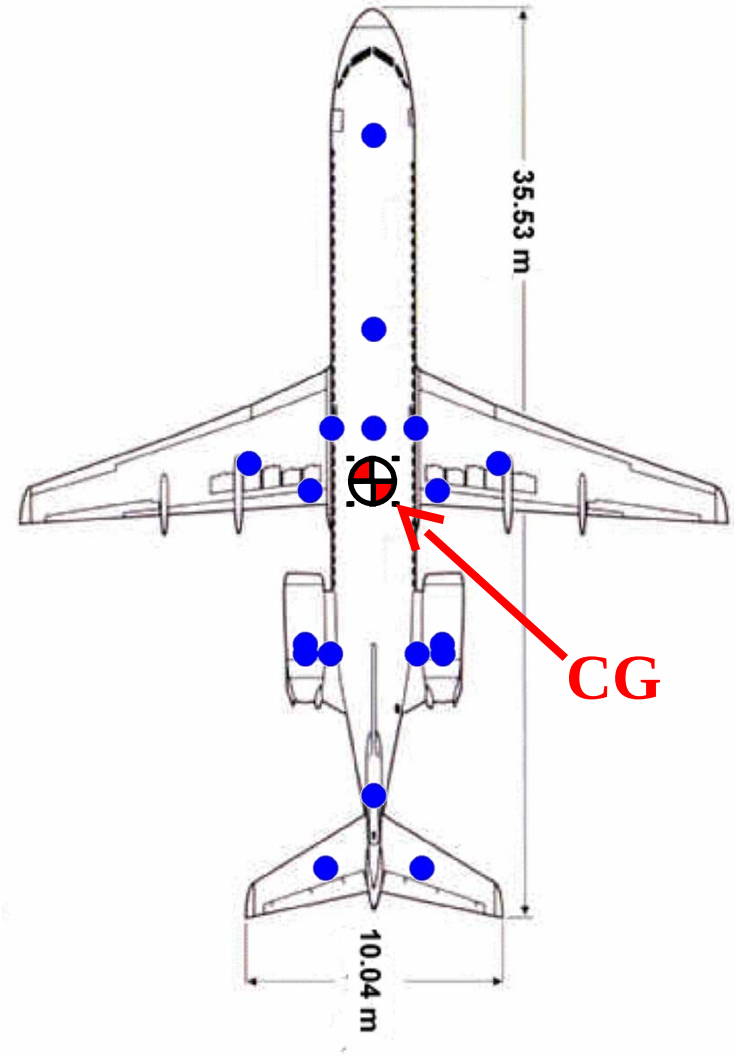

We compute CG contributions from different groups

Empty aircraft

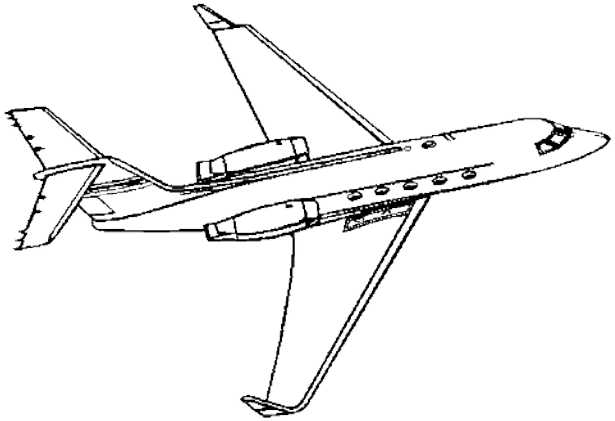

Fuel

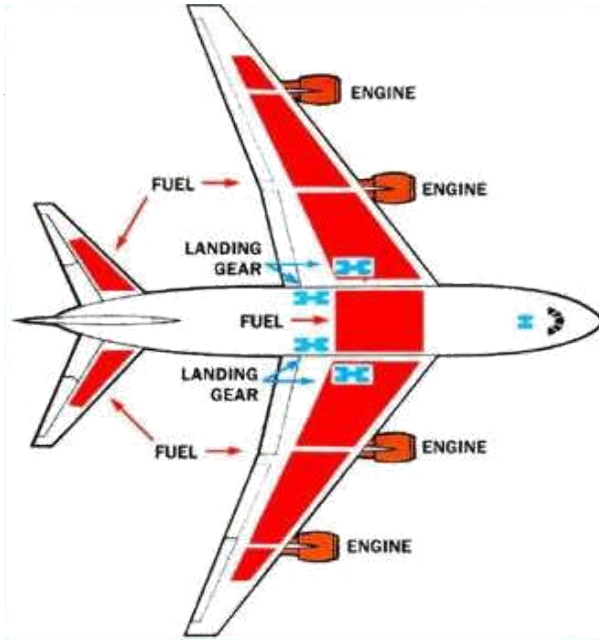

Crew & Payload

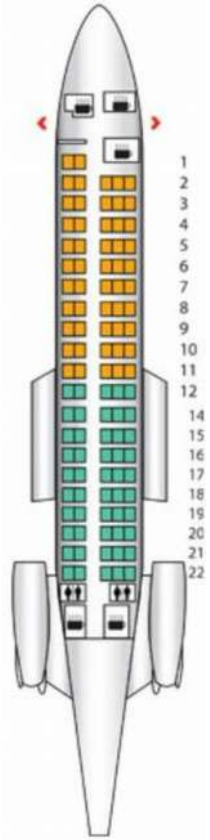

Fuel tanks may be stored in wing, fuselage, and tails

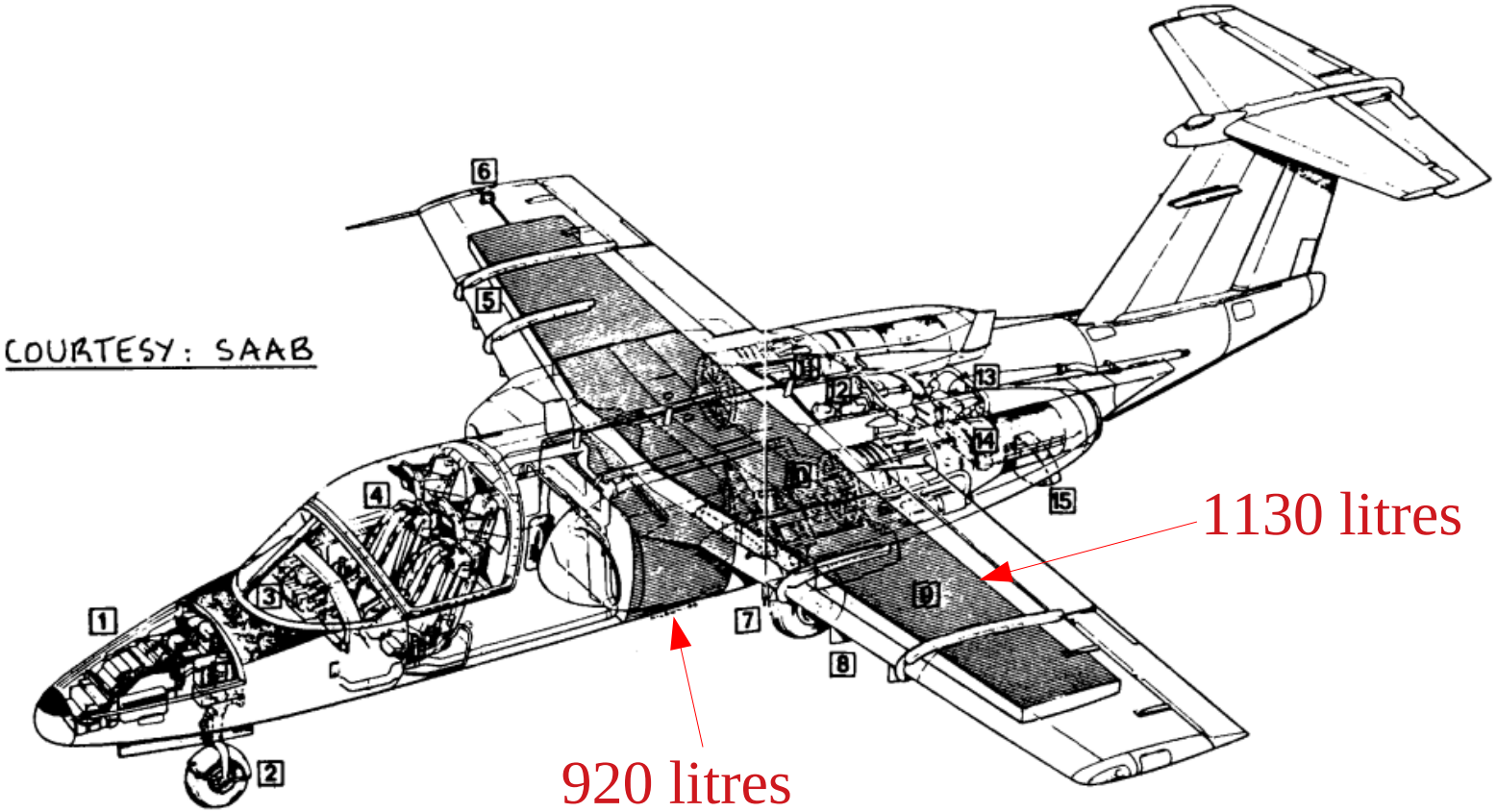

SAAB XT-105

Roskam

Fuel tanks may be stored in wing, fuselage, and tails

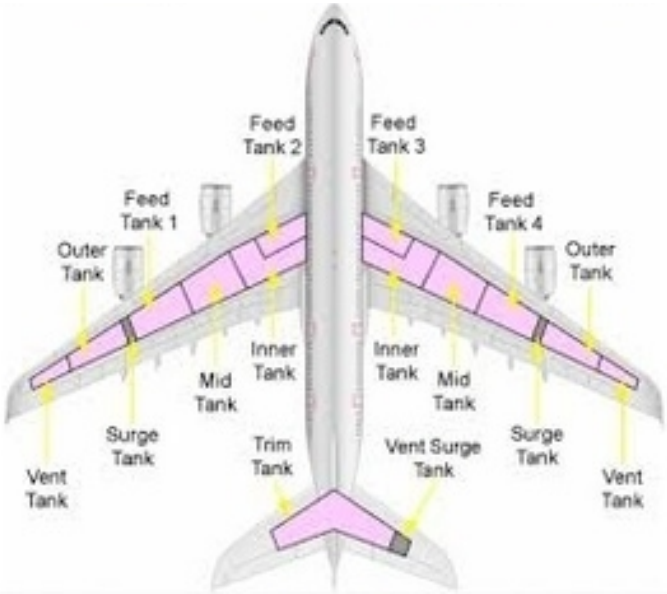

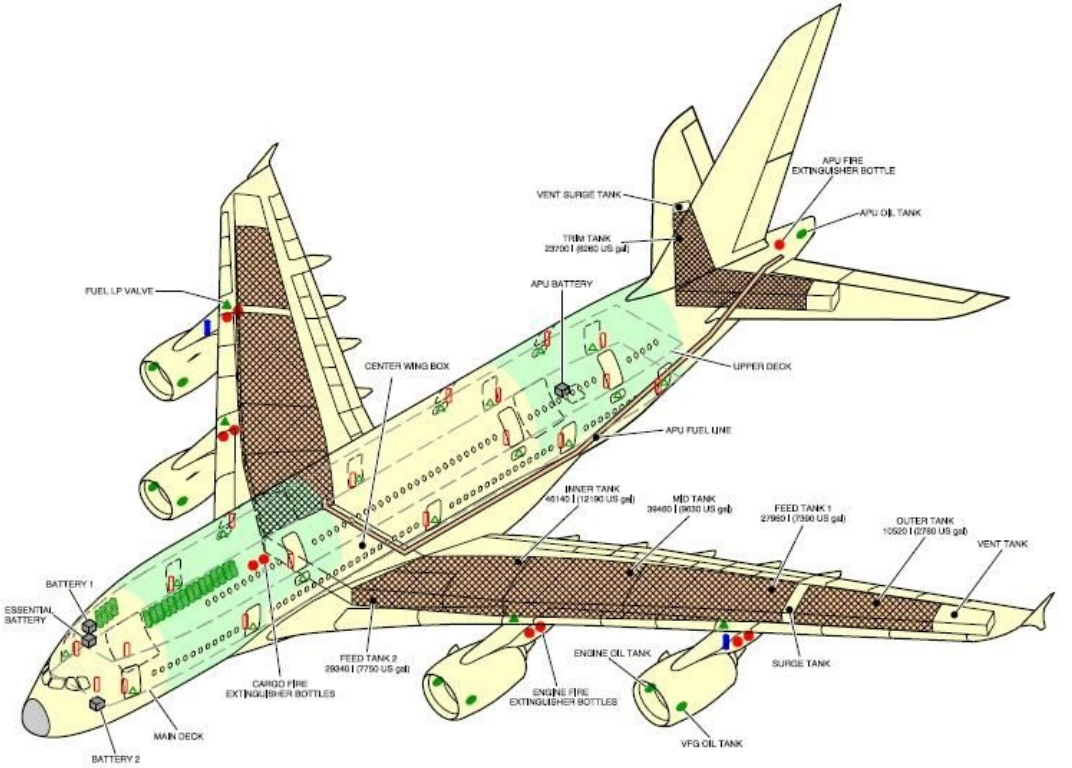

USABLE FUEL (Fuel Specific Density: 0.785 kg/l)								
		Outer Tanks (each)	Feed Tanks 1/4 (each)	Mid Tanks (each)	Inner Tanks (each)	Feed Tanks 2/3 (each)	Trim Tank	Total
VOLUME	(liters)	10 520	27 960	36 460	46 140	29 340	23 700	324 540
	(US gallons)	2 780	7 390	9 630	12 190	7 750	6 260	85 740
WEIGHT	(kg)	8 260	21 950	28 620	36 220	23 030	18 600	254 760
	(lbs)	18 200	48 390	63 100	79 850	50 780	41 020	561 660

http://www.smartcockpit.com/docs/A380_Briefing_For_Pilots_Part%202.pdf

Fuel tanks may be stored in wing, fuselage, and tails

Concorde

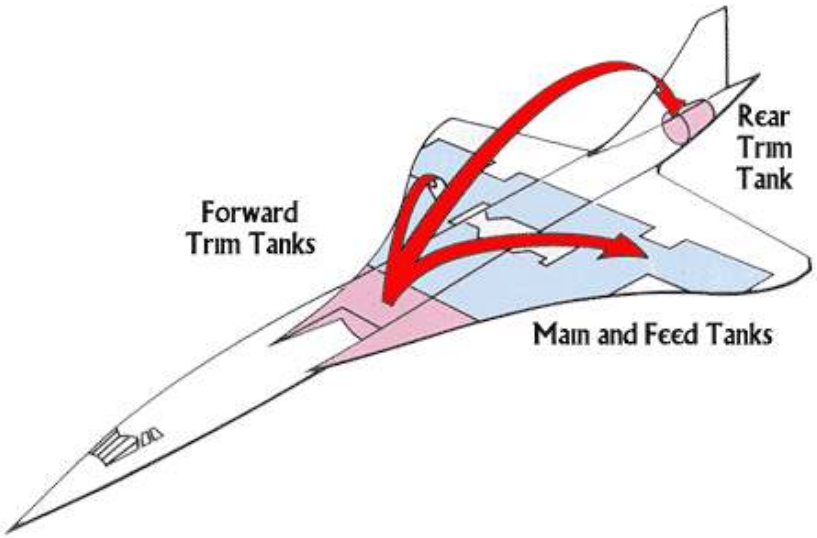

Takeoff, Climb,
and Acceleration

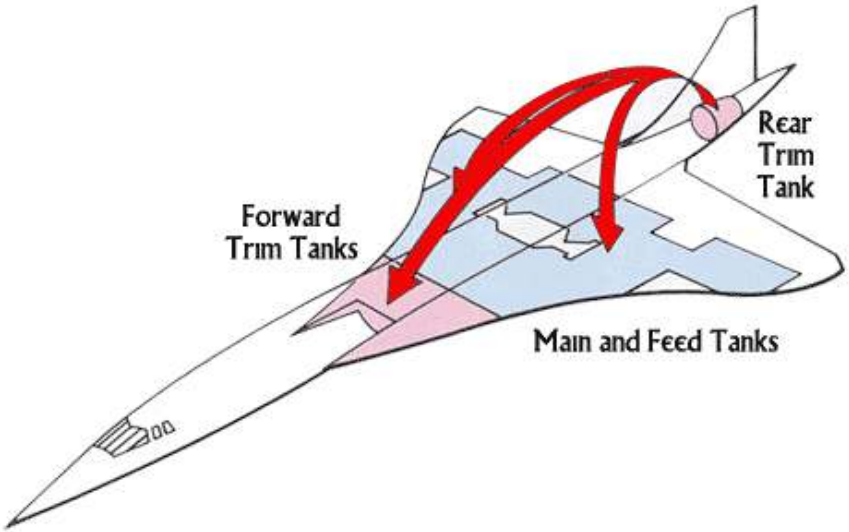

End of Cruise
and Decceleration

http://www.concordesst.com/fuelsys.html

CG varies with load configuration

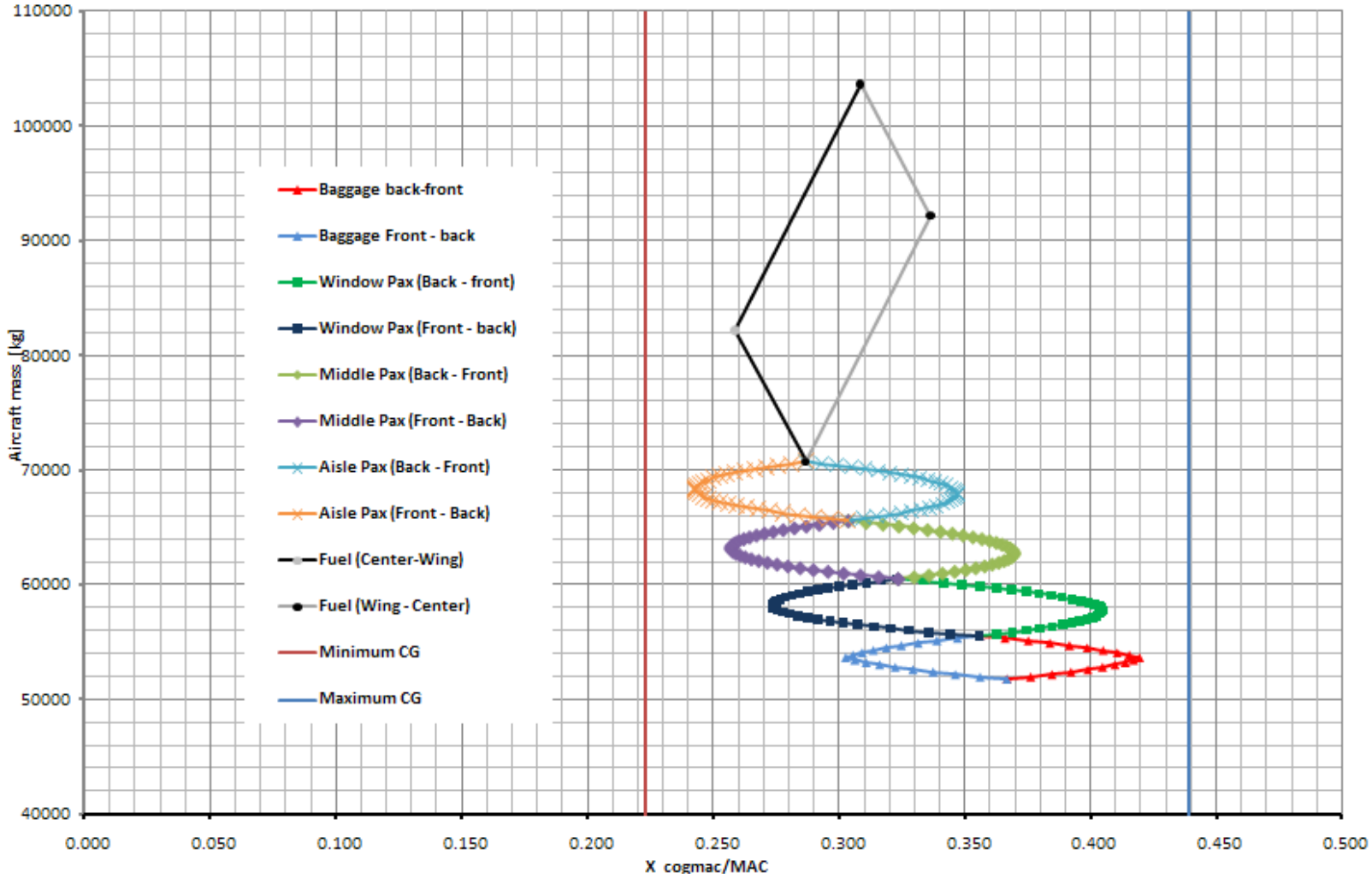

Estimating inertia moments

$$I_{xx} = \sum_{i=1}^{n} W_i \left((y_i - y_{CG})^2 + (z_i - z_{CG})^2 \right)$$

$$I_{yy} = \sum_{i=1}^{n} W_i \left((x_i - x_{CG})^2 + (z_i - z_{CG})^2 \right)$$

$$I_{zz} = \sum_{i=1}^{n} W_i \left((x_i - x_{CG})^2 + (y_i - y_{CG})^2 \right)$$

$$I_{xy} = \sum_{i=1}^{n} W_i (x_i - x_{CG})(y_i - y_{CG})$$

$$I_{xz} = \sum_{i=1}^{n} W_i (x_i - x_{CG})(z_i - z_{CG})$$

$$I_{yz} = \sum_{i=1}^{n} W_i (y_i - y_{CG})(z_i - z_{CG})$$

Road map

- Center of Gravity
- Stability & Control
- Landing Gear
- Structures

Stability

- Stability → tendency of returning to the equilibrium position

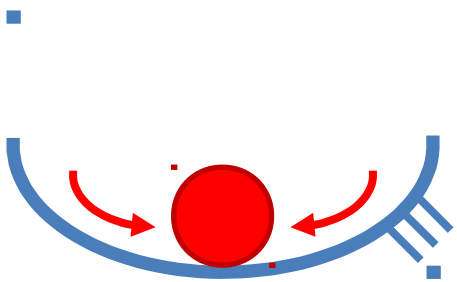

STABLE

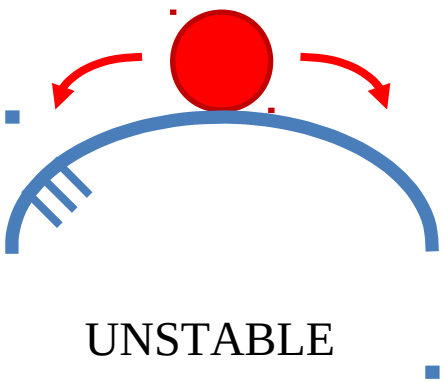

UNSTABLE

Stability

- Stability → tendency of returning to the equilibrium position

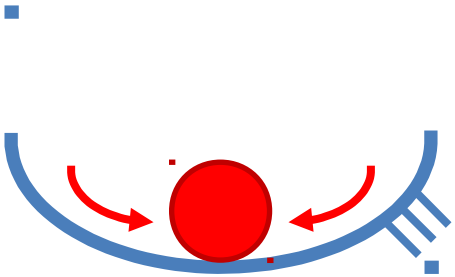

STABLE

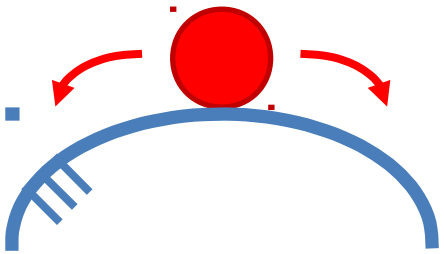

UNSTABLE

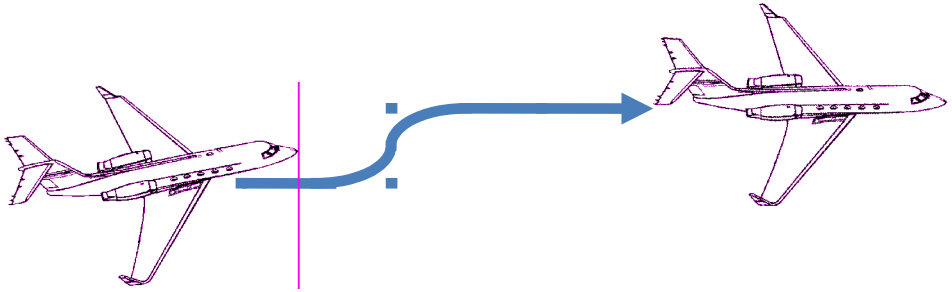

Stability

- Stability → tendency of returning to the equilibrium position

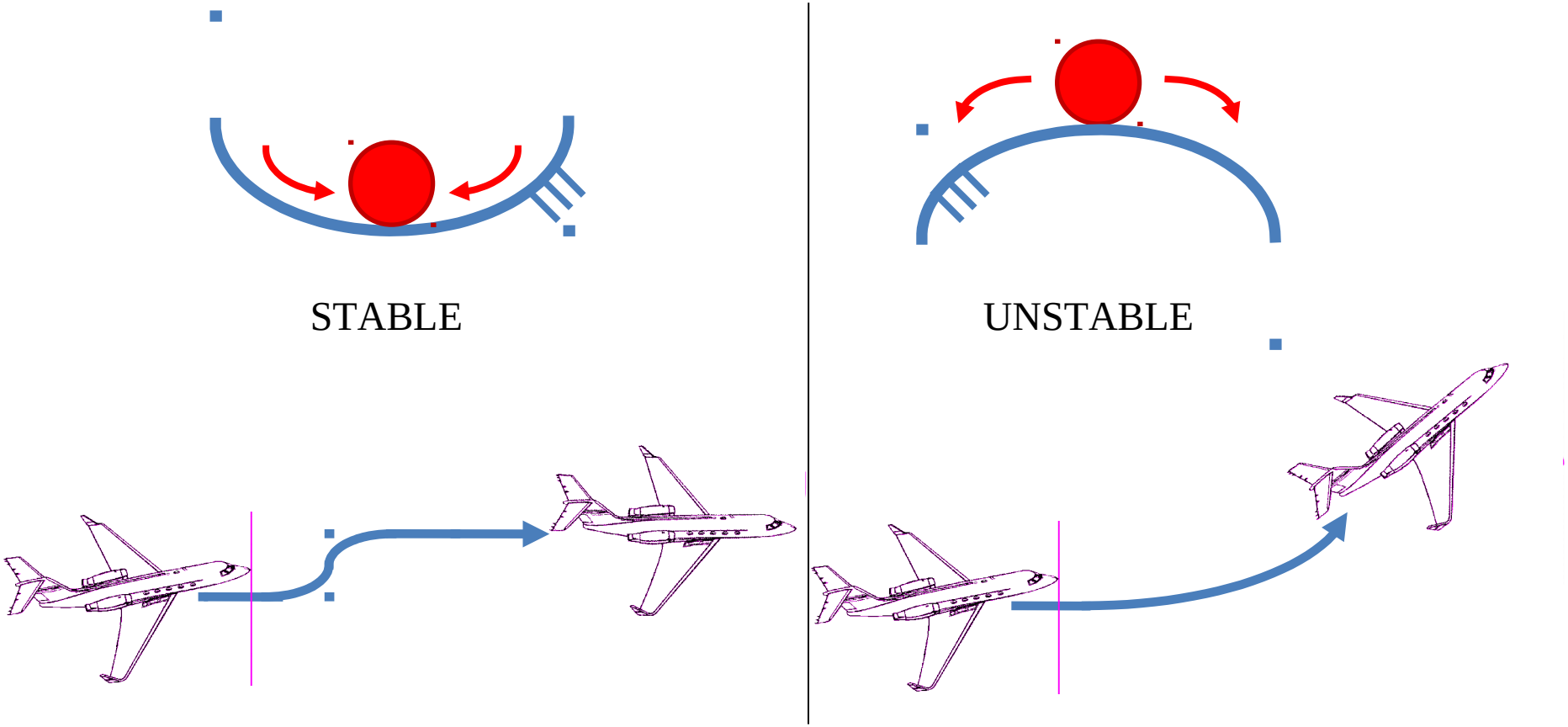

Stability

- Stability → tendency of returning to the equilibrium position

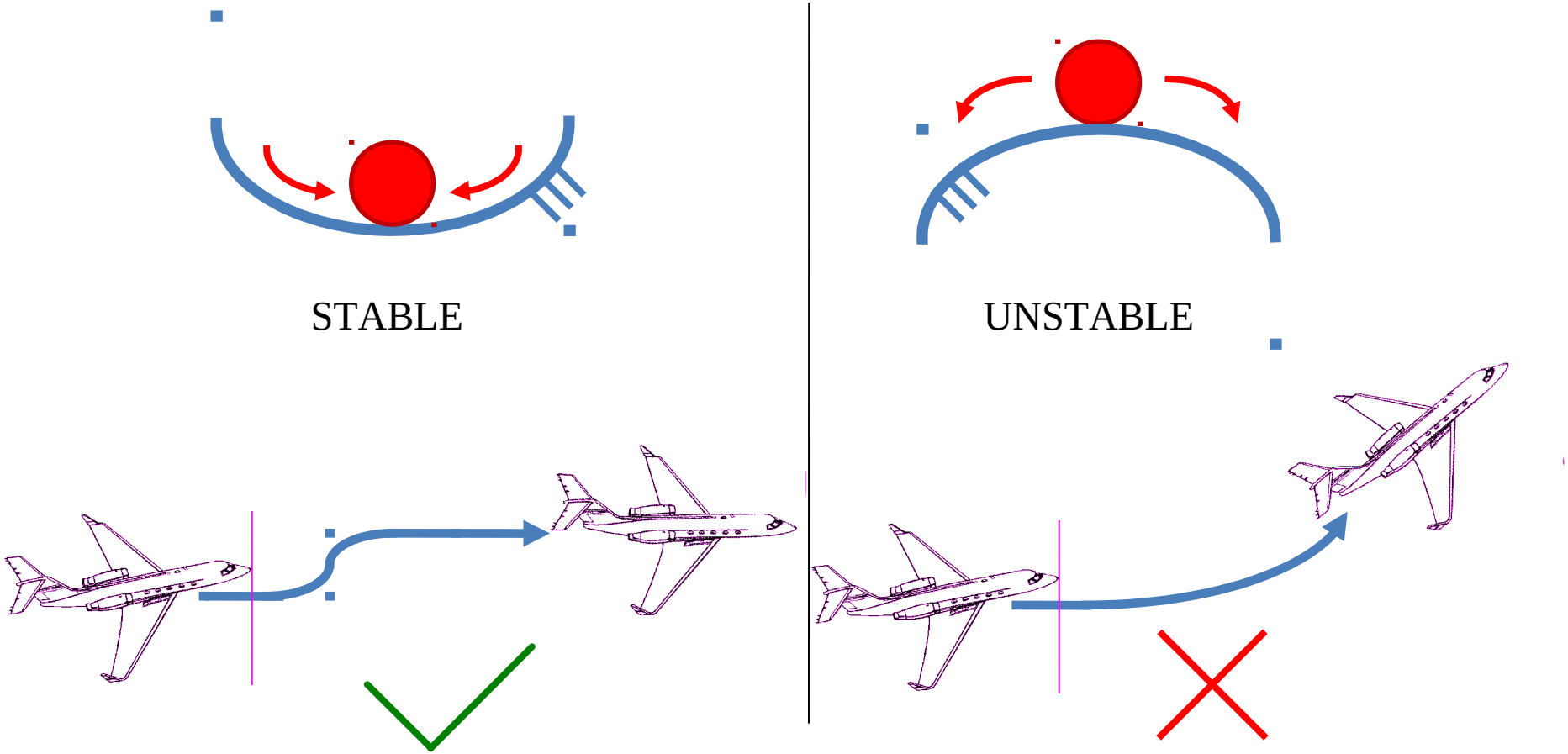

Aerodynamic Center (AC)

Aerodynamic Center (AC) is the point where the pitching moment independs of the angle of attack.

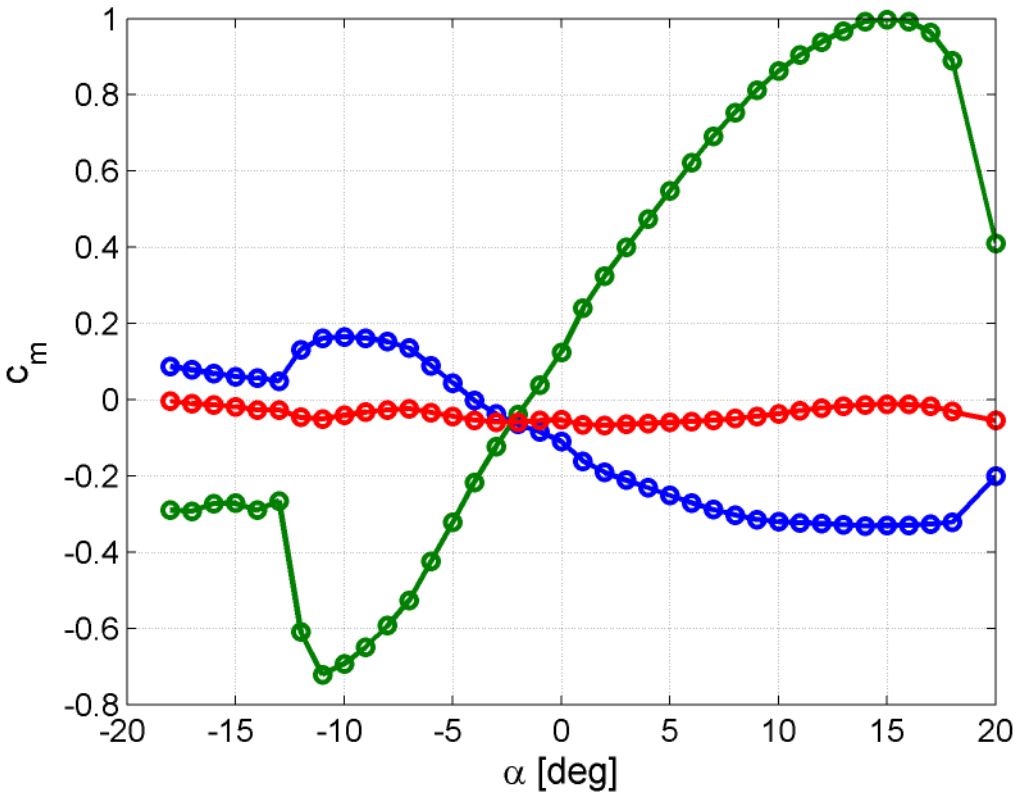

NACA 2412
Re 3e5
XFOIL

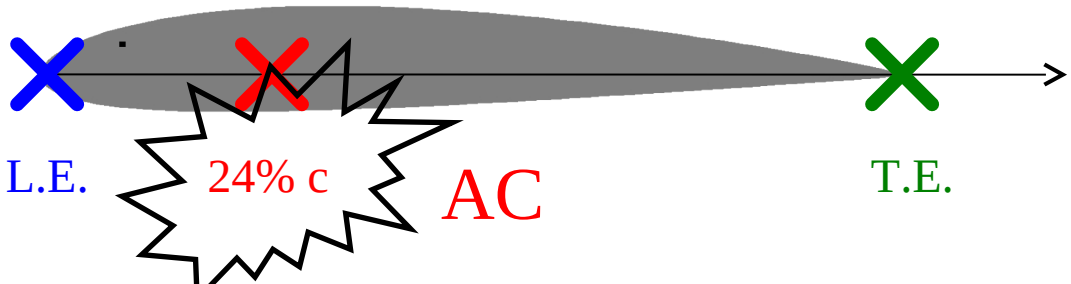

Where is the AC?

AIRFOIL:

Where is the AC?

AIRFOIL:

25% c

SURFACE:

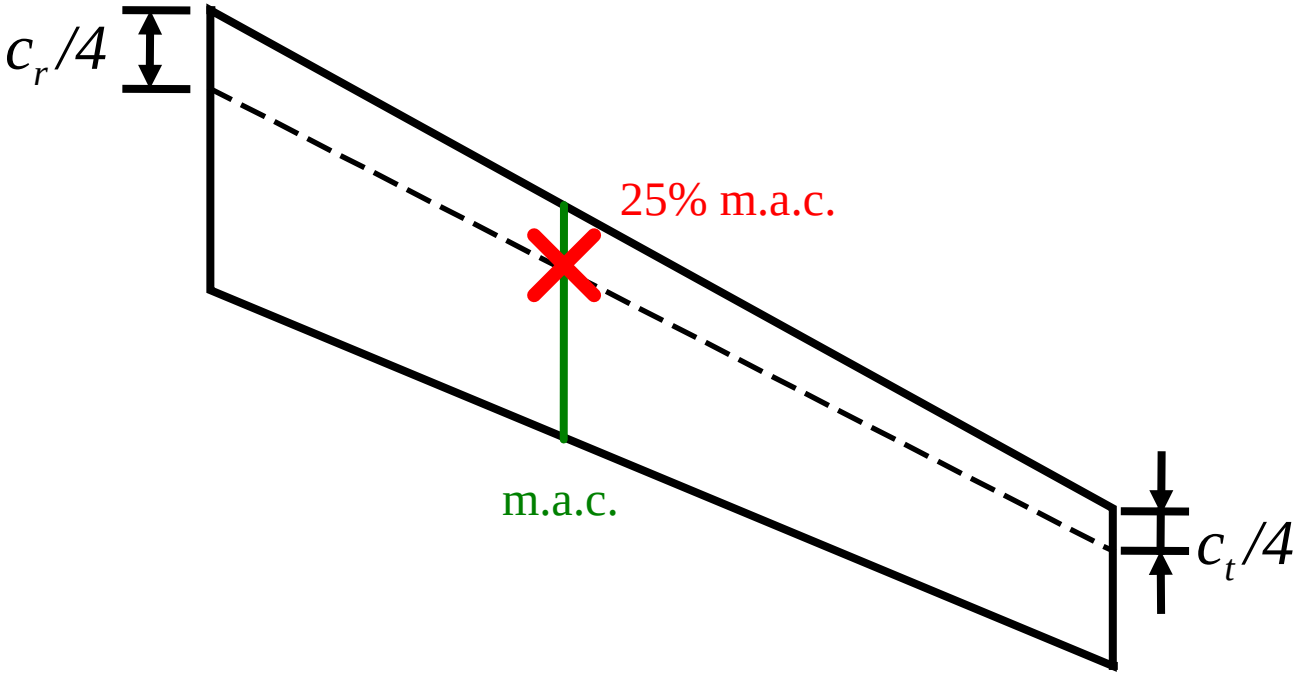

Where is the AC?

AIRPLANE:

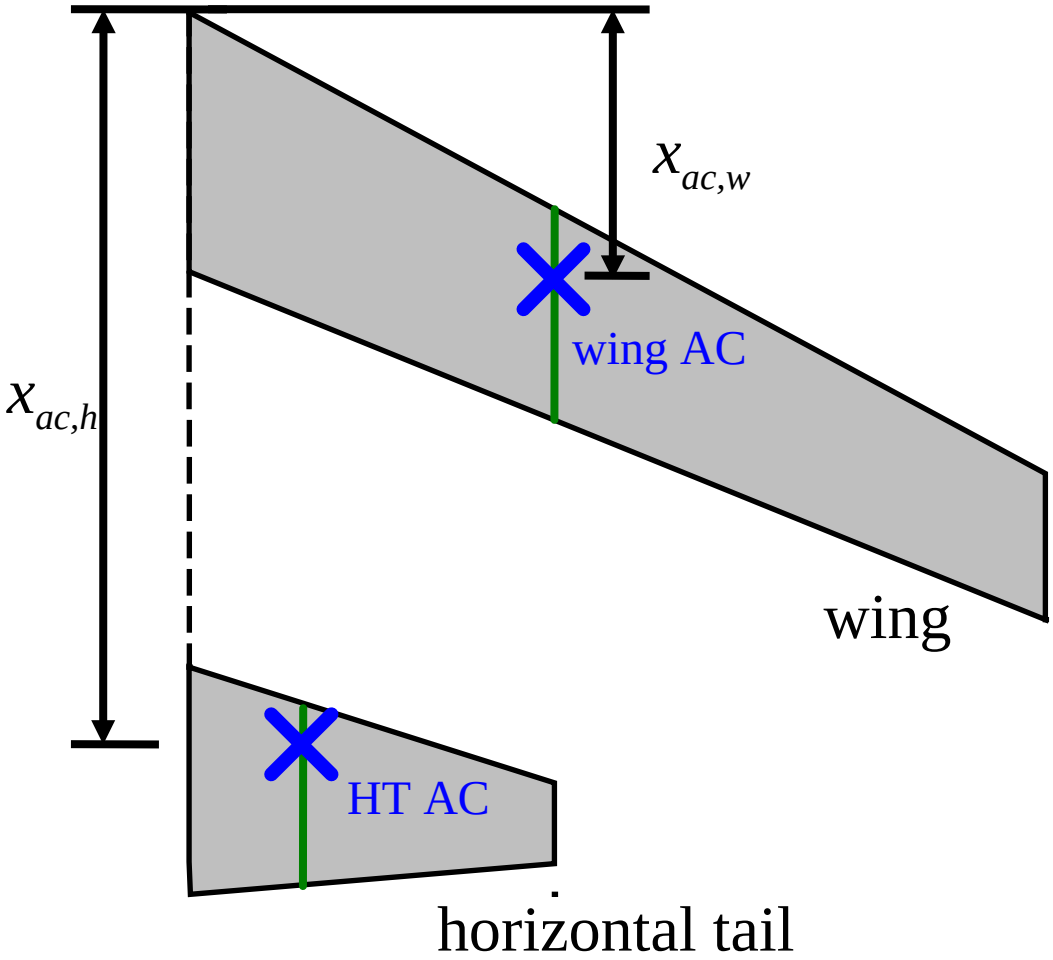

Where is the AC?

AIRPLANE:

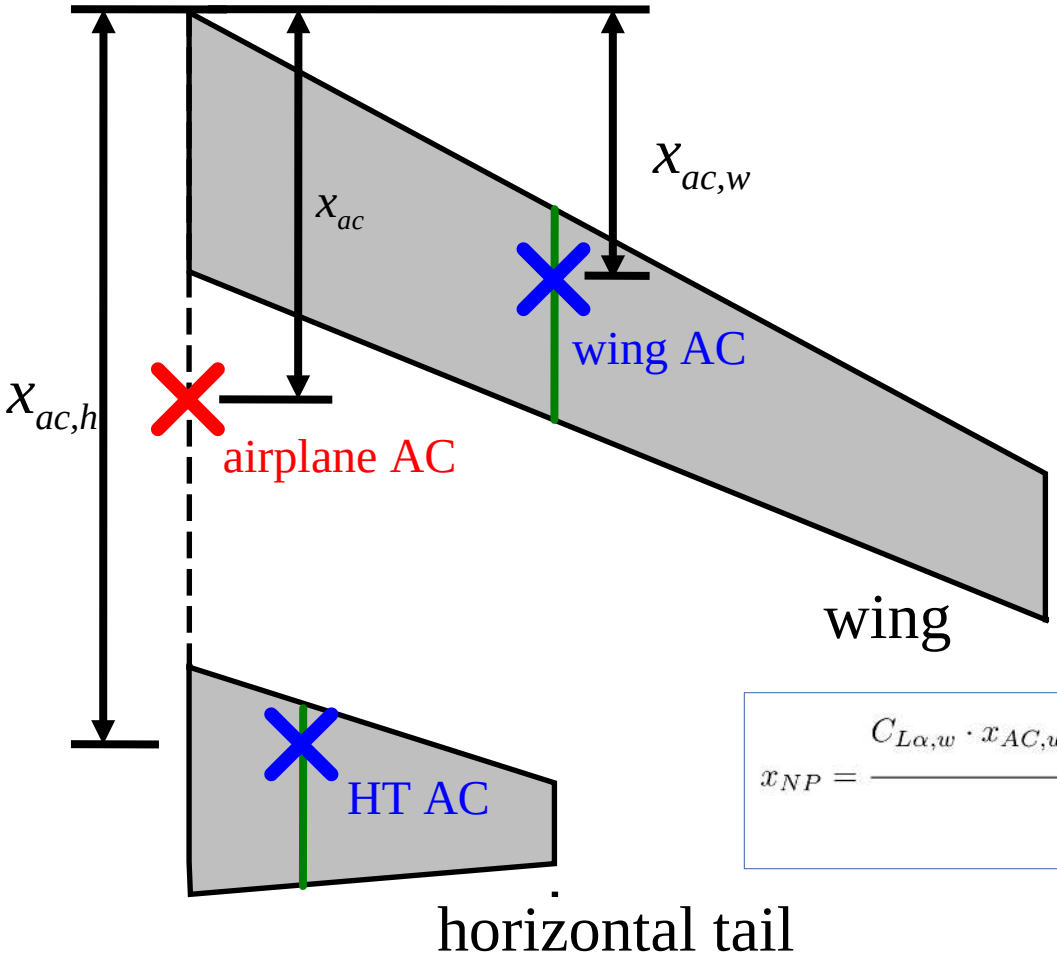

$$x_{NP} = \frac{C_{L\alpha,w} \cdot x_{AC,w} - C_{M\alpha,f} \cdot c_{m,w} + \eta_h \cdot \frac{S_h}{S_w} \cdot C_{L\alpha,h} \cdot \left(1 - \frac{\partial \epsilon}{\partial \alpha}\right) \cdot x_{AC,h}}{C_{L\alpha,w} + \eta_h \cdot \frac{S_h}{S_w} \cdot C_{L\alpha,h} \cdot \left(1 - \frac{\partial \epsilon}{\partial \alpha}\right)}$$

CG and AC

Case 1: CG in front of AC

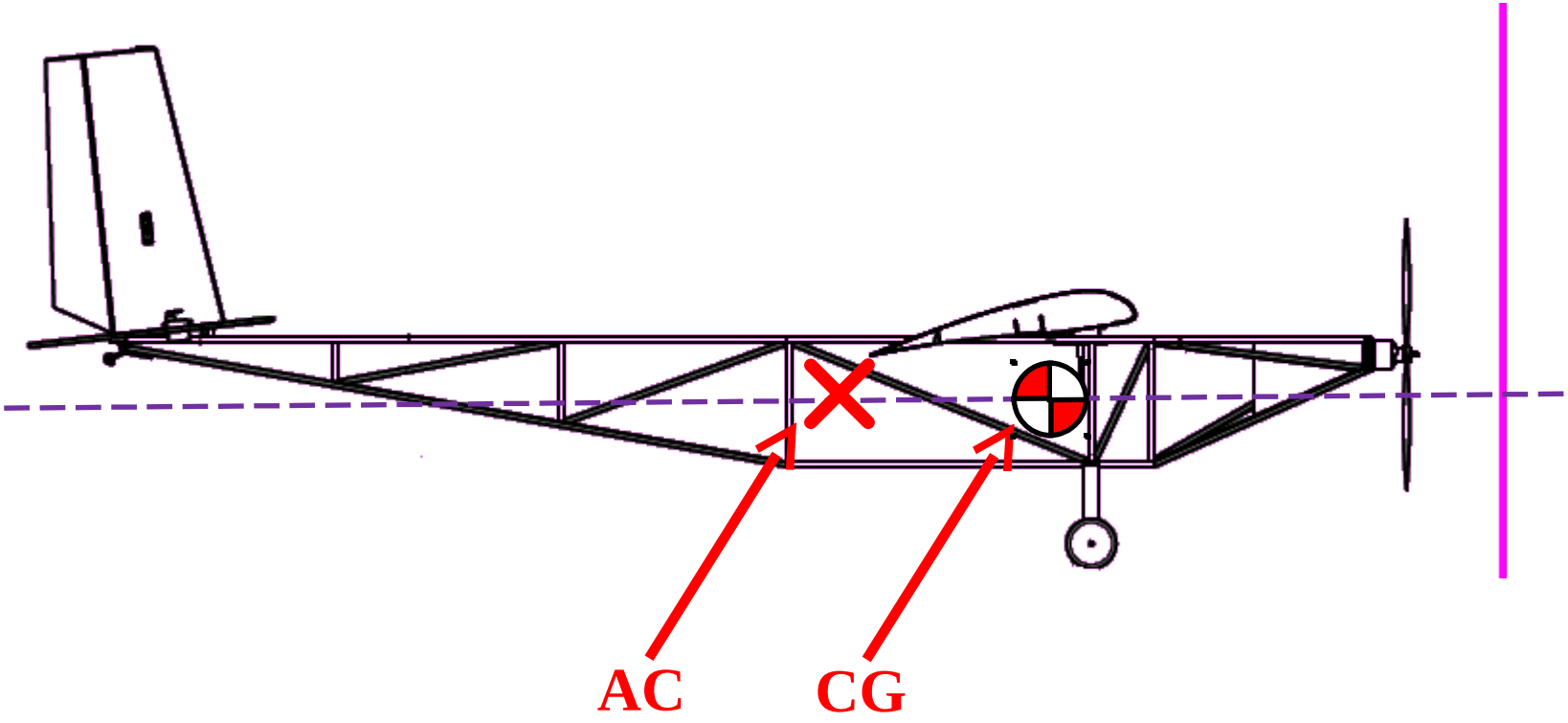

CG and AC

Case 1: CG in front of AC

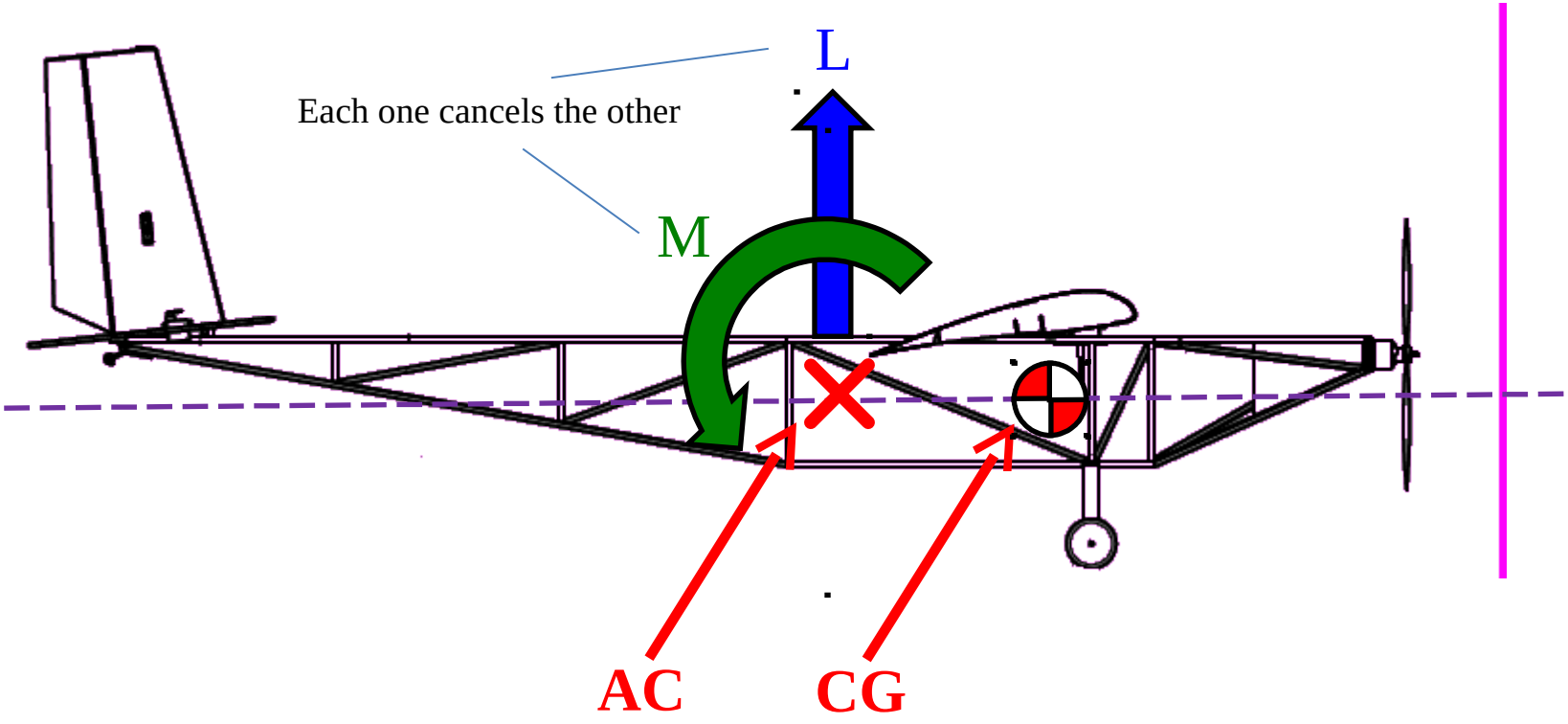

CG and AC

Case 1: CG in front of AC

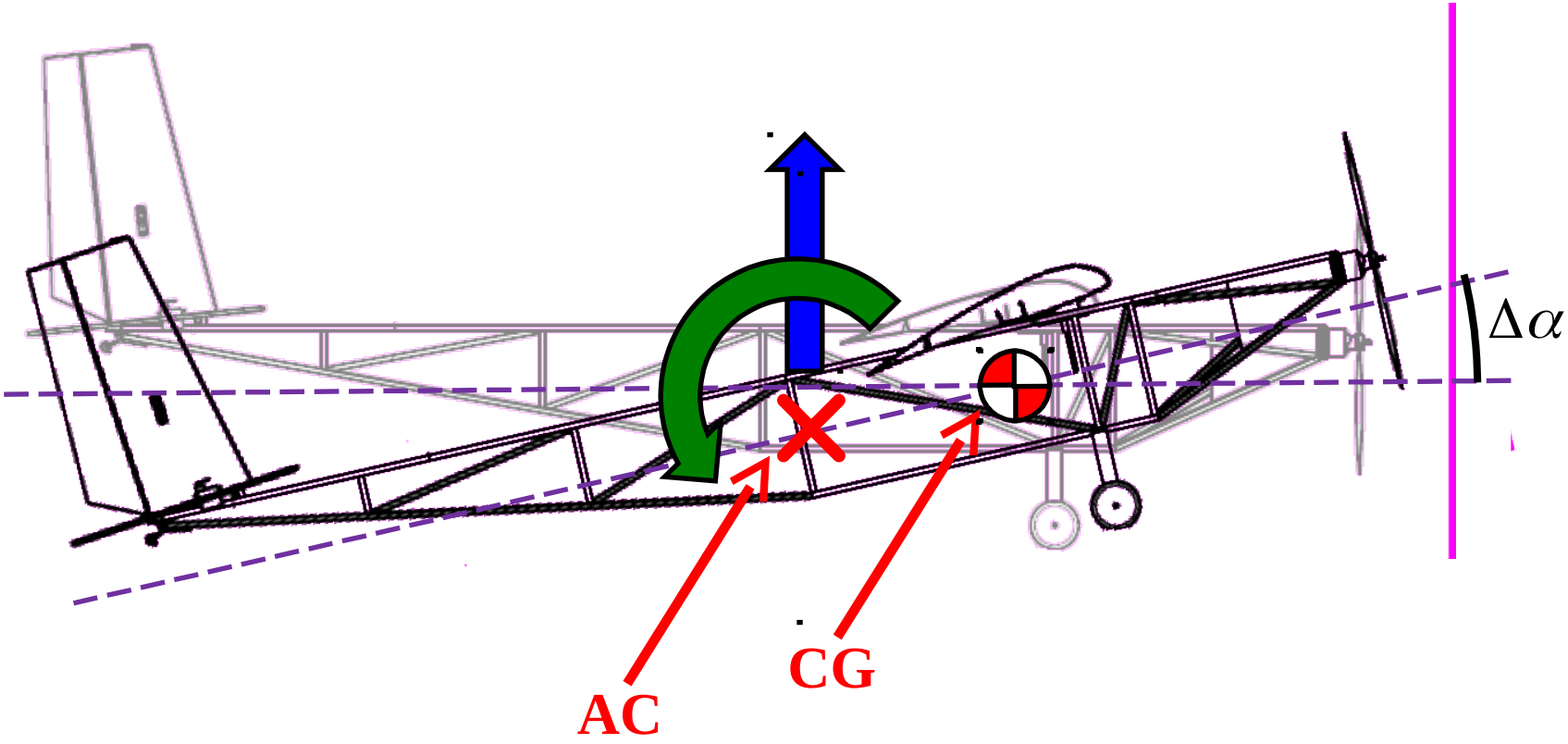

CG and AC

Case 1: CG in front of AC

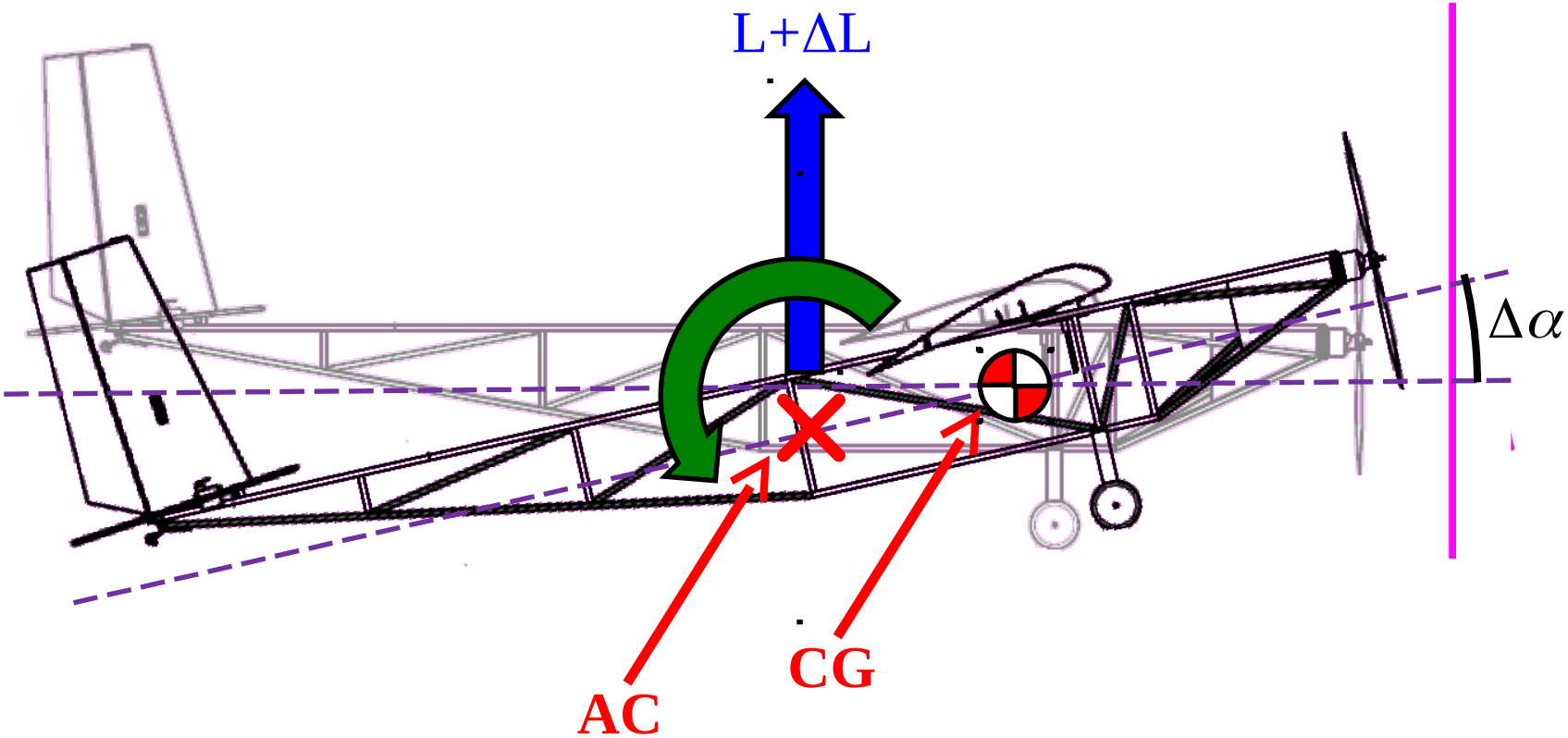

CG and AC

Case 1: CG in front of AC

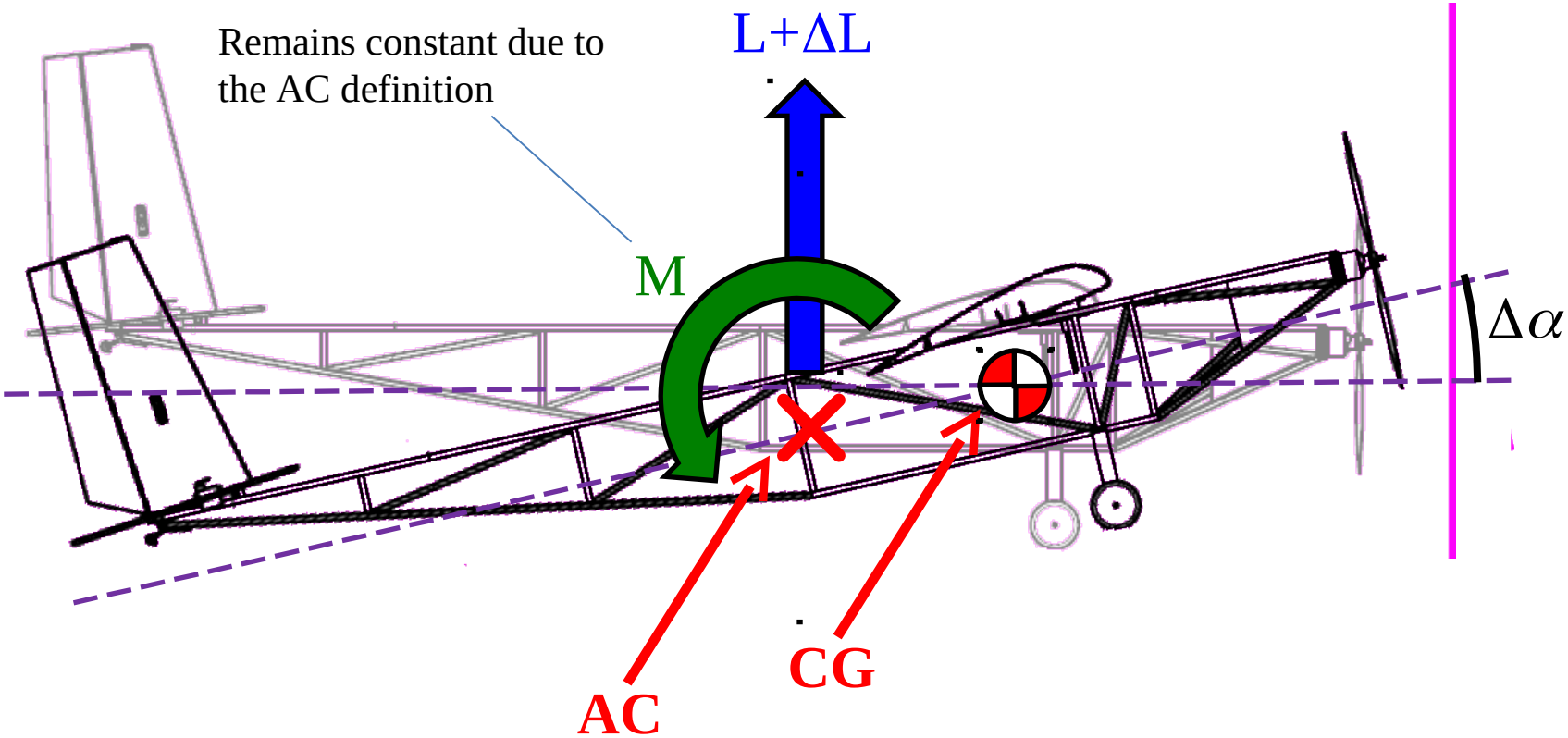

CG and AC

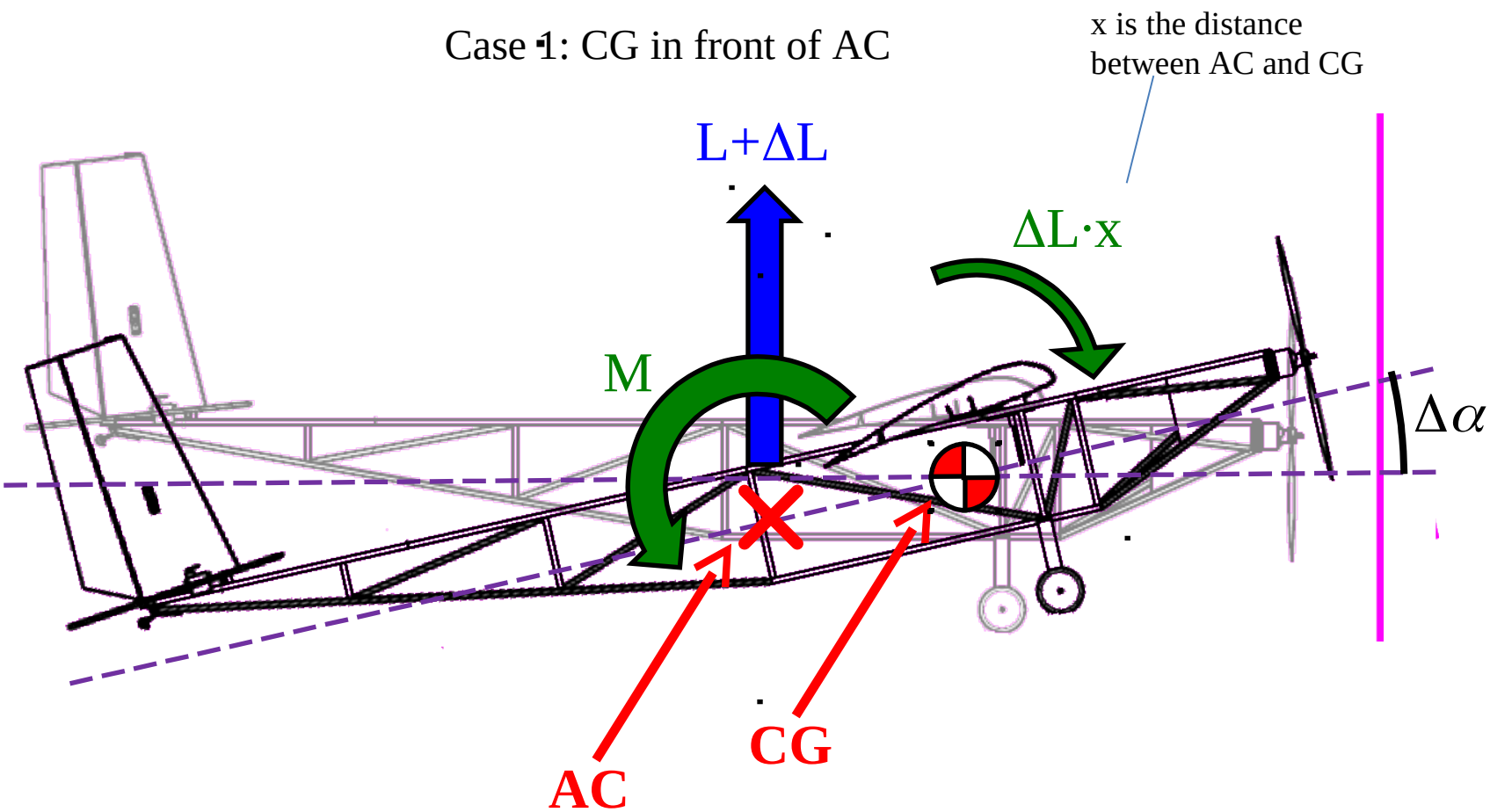
Case 1: CG in front of AC
x is the distance between AC and CG
L+ΔL
ΔL·x
M
Δα
AC
CG

CG and AC

Case 1: CG in front of AC

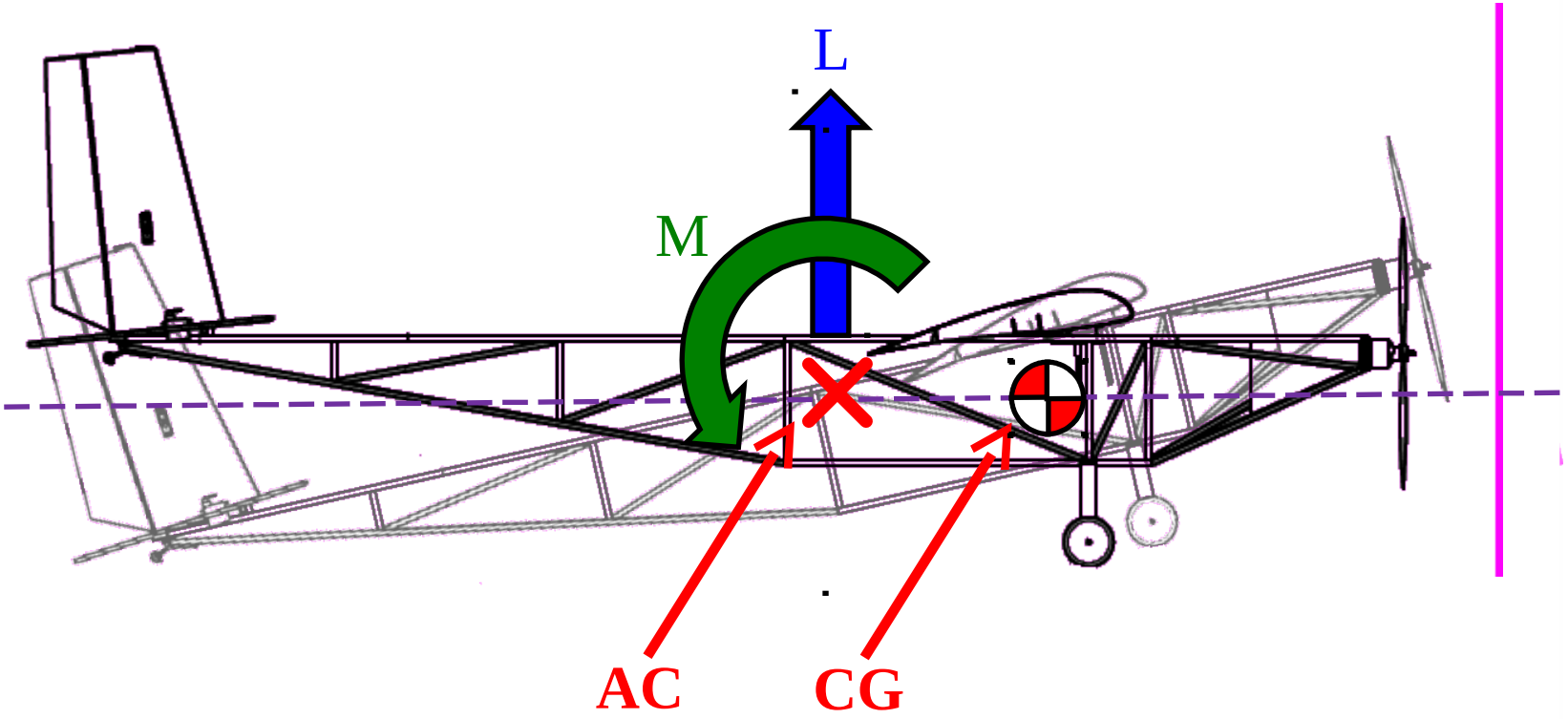

CG and AC

Case 1: CG in front of AC

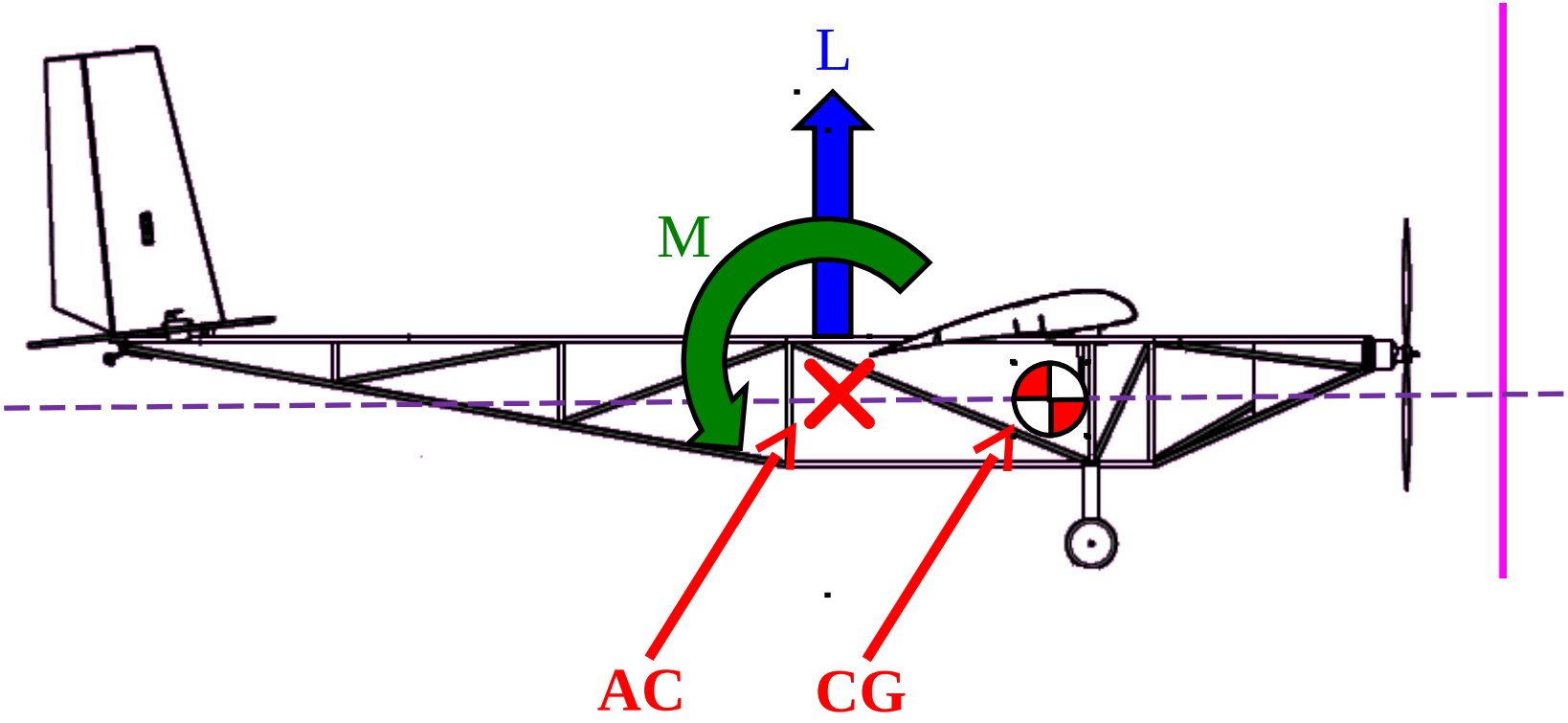

STABLE

CG and AC

Case 2: AC in front of CG

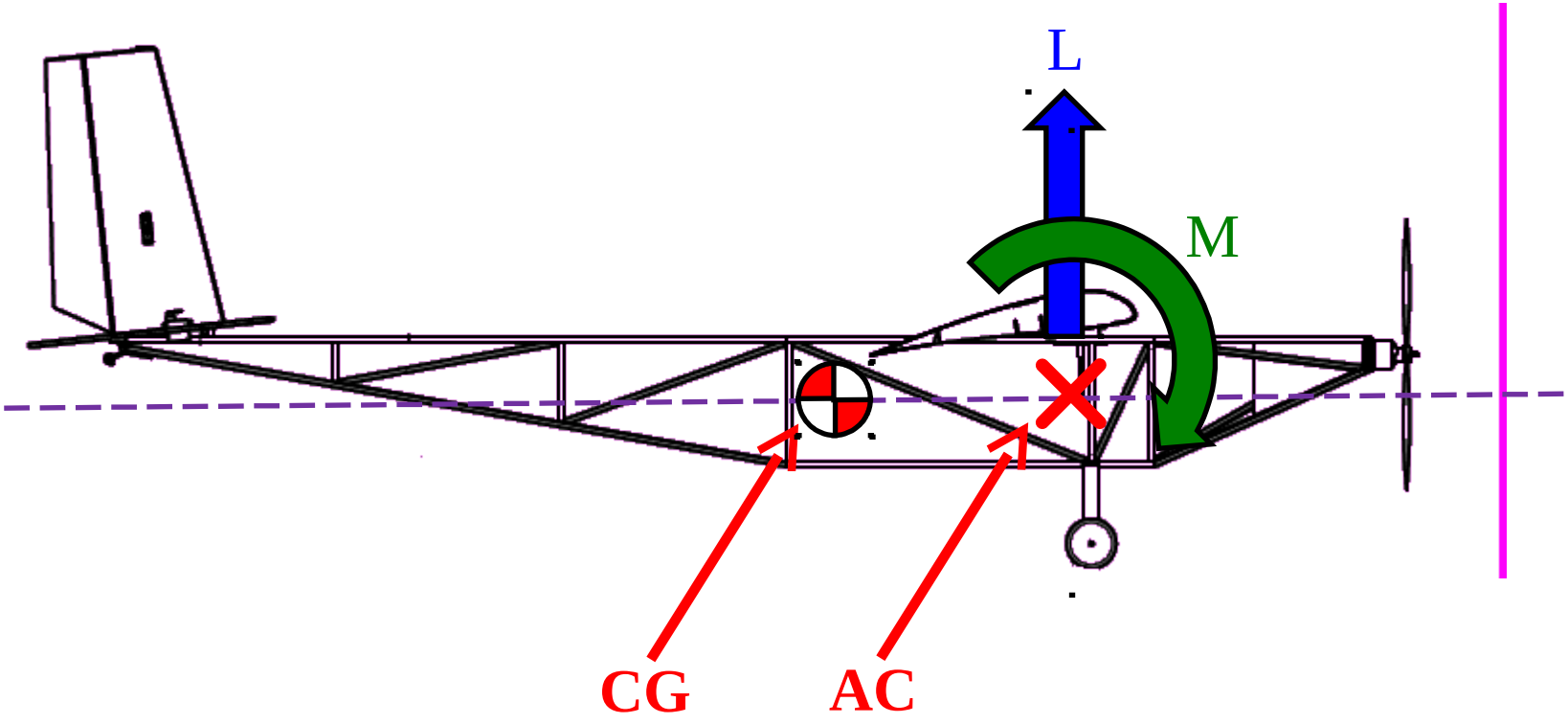

CG and AC

Case 2: AC in front of CG

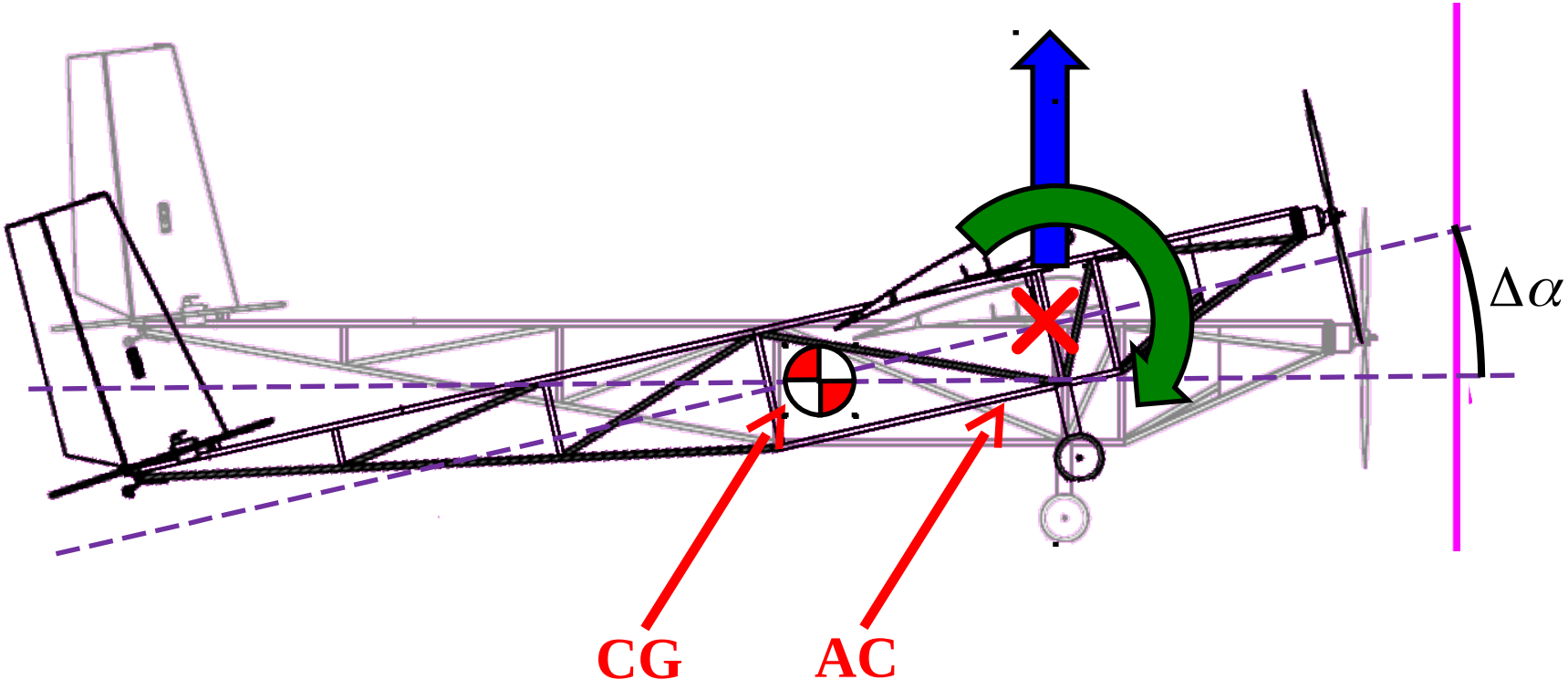

CG and AC

Case 2: AC in front of CG

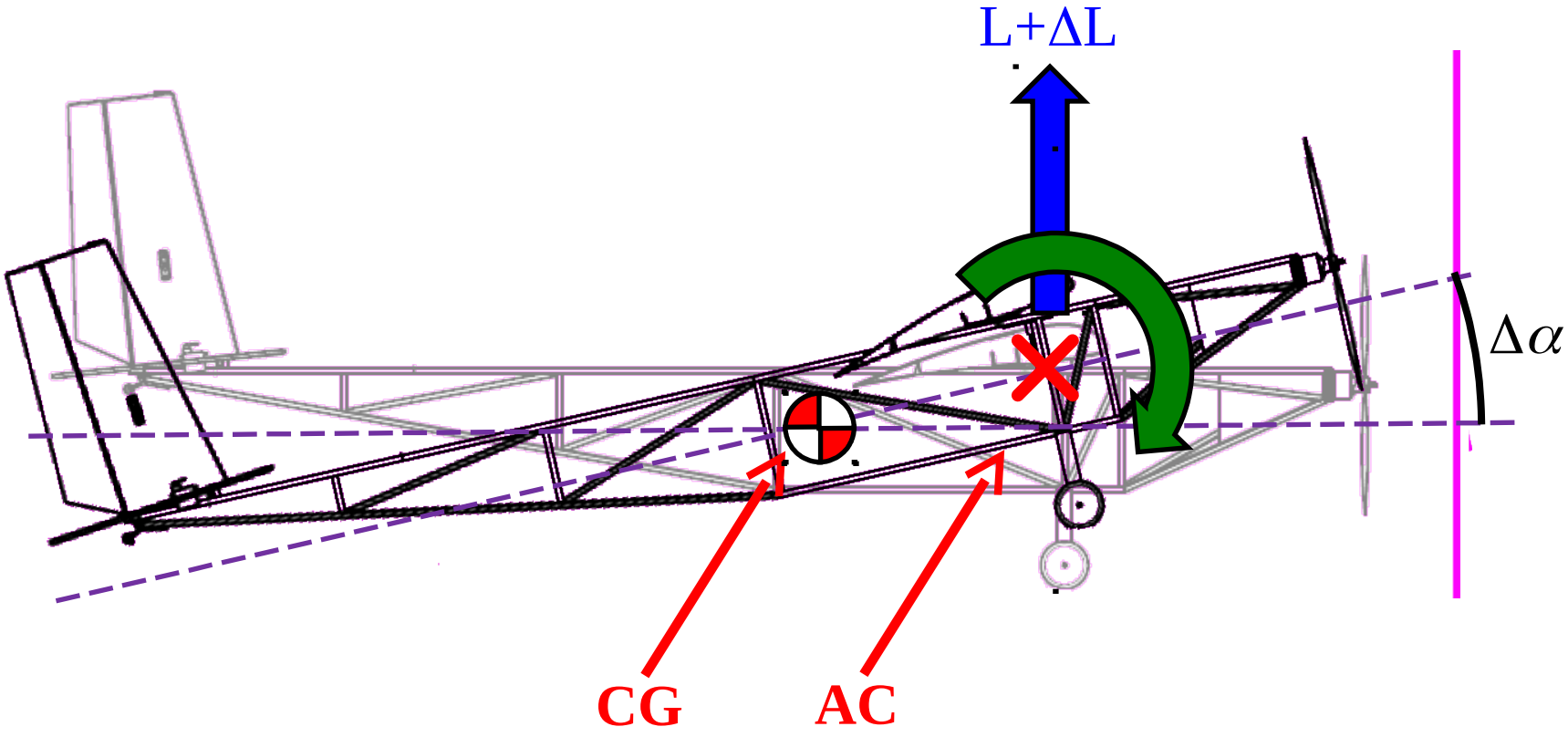

CG and AC

Case 2: AC in front of CG

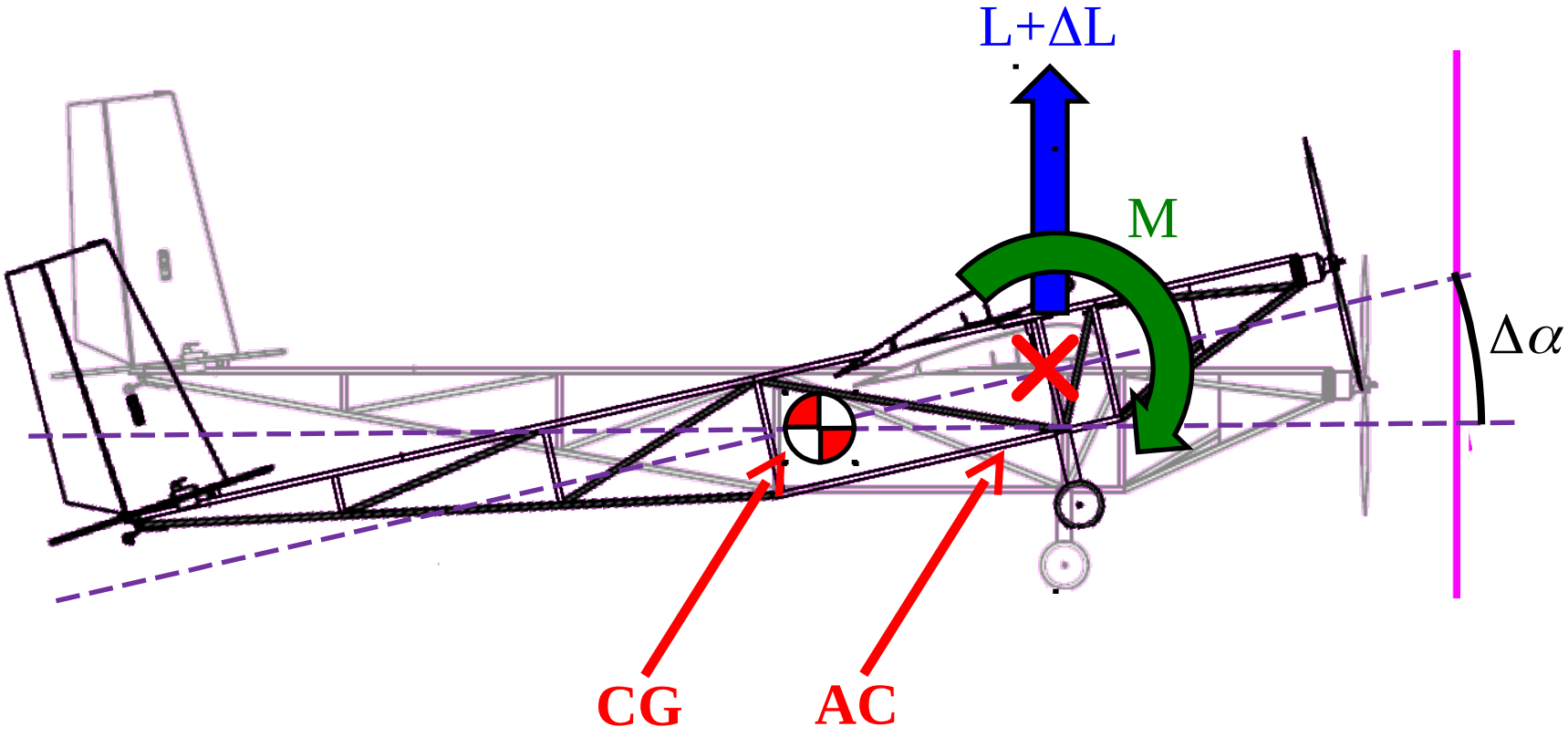

CG and AC

Case 2: AC in front of CG

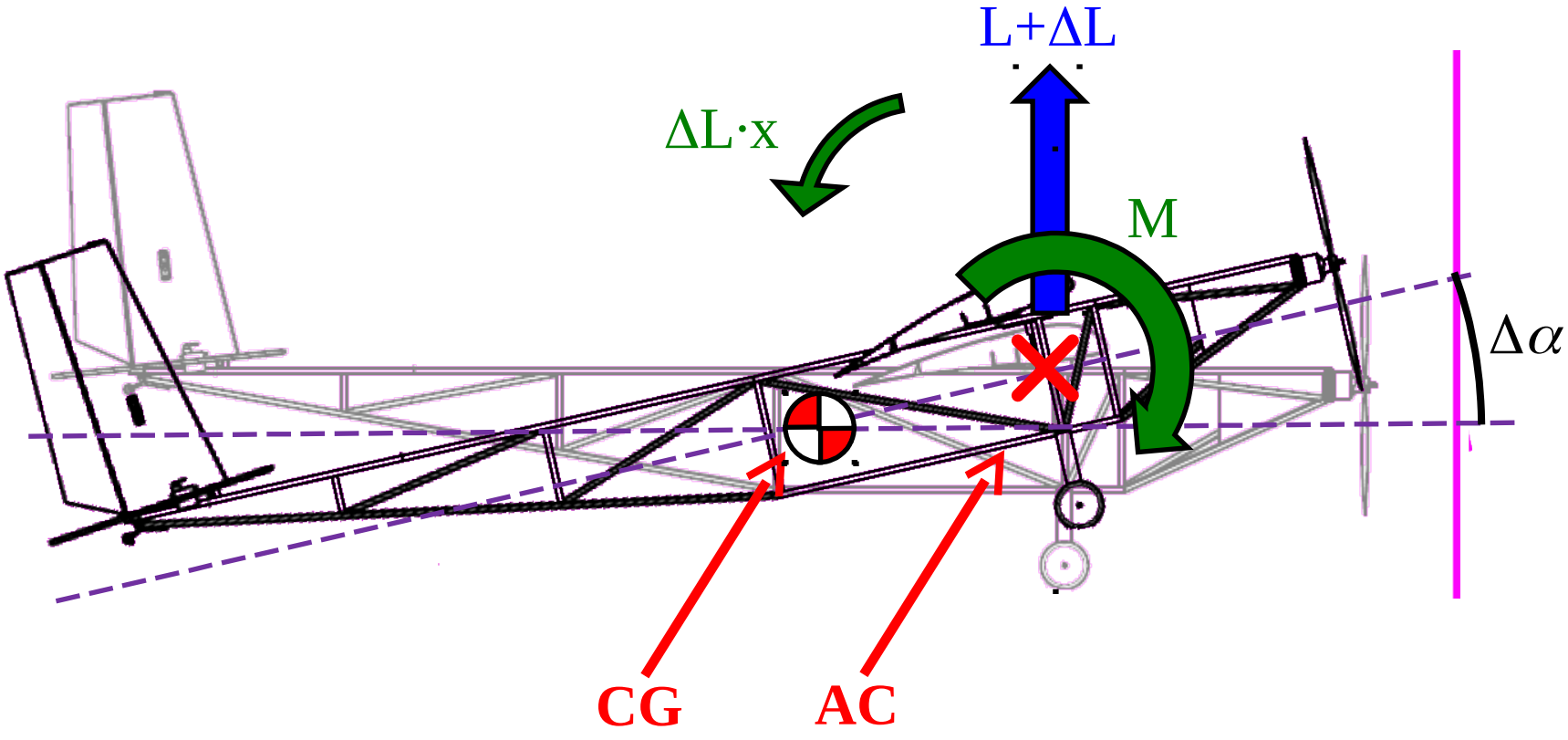

CG and AC

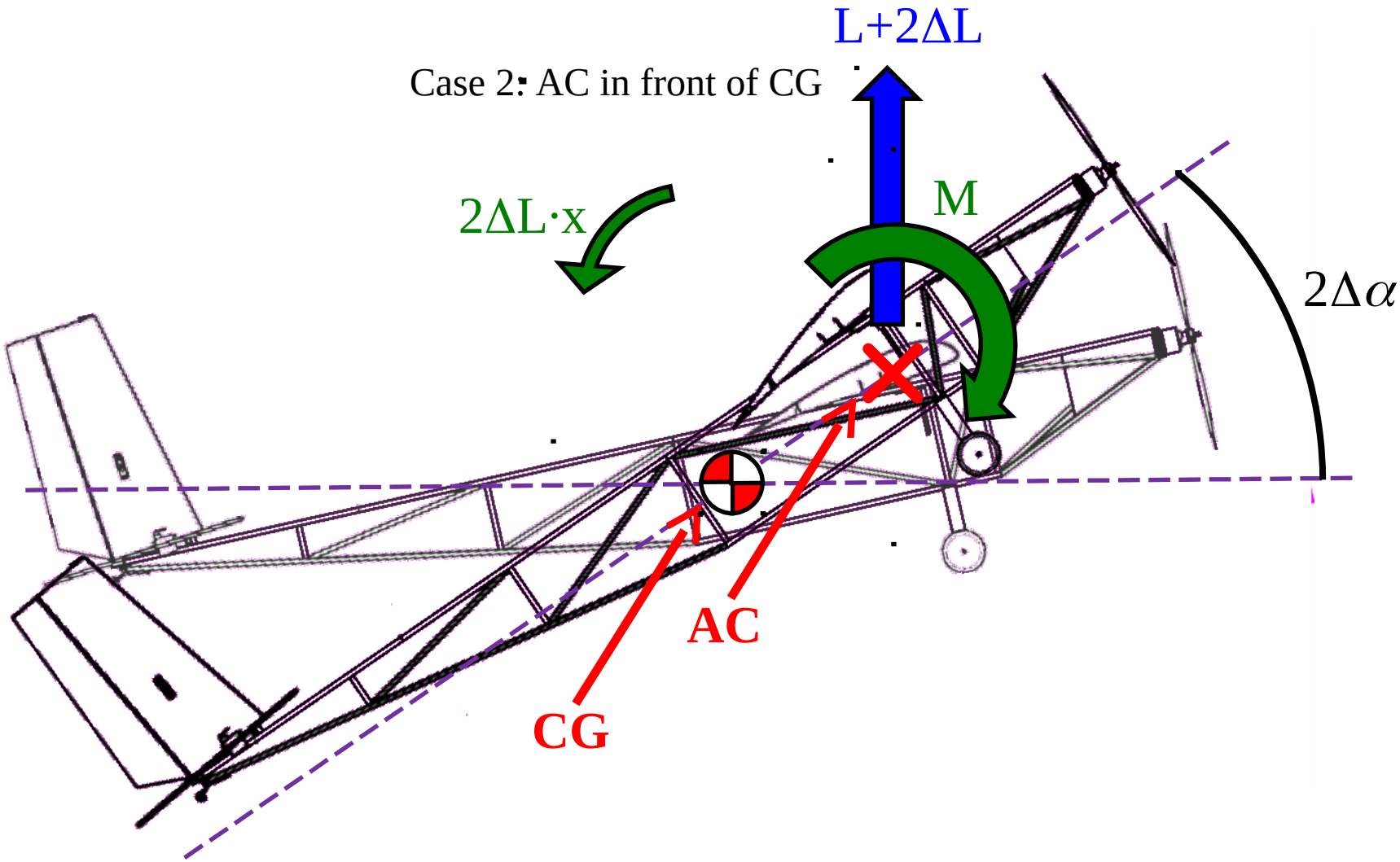

CG and AC

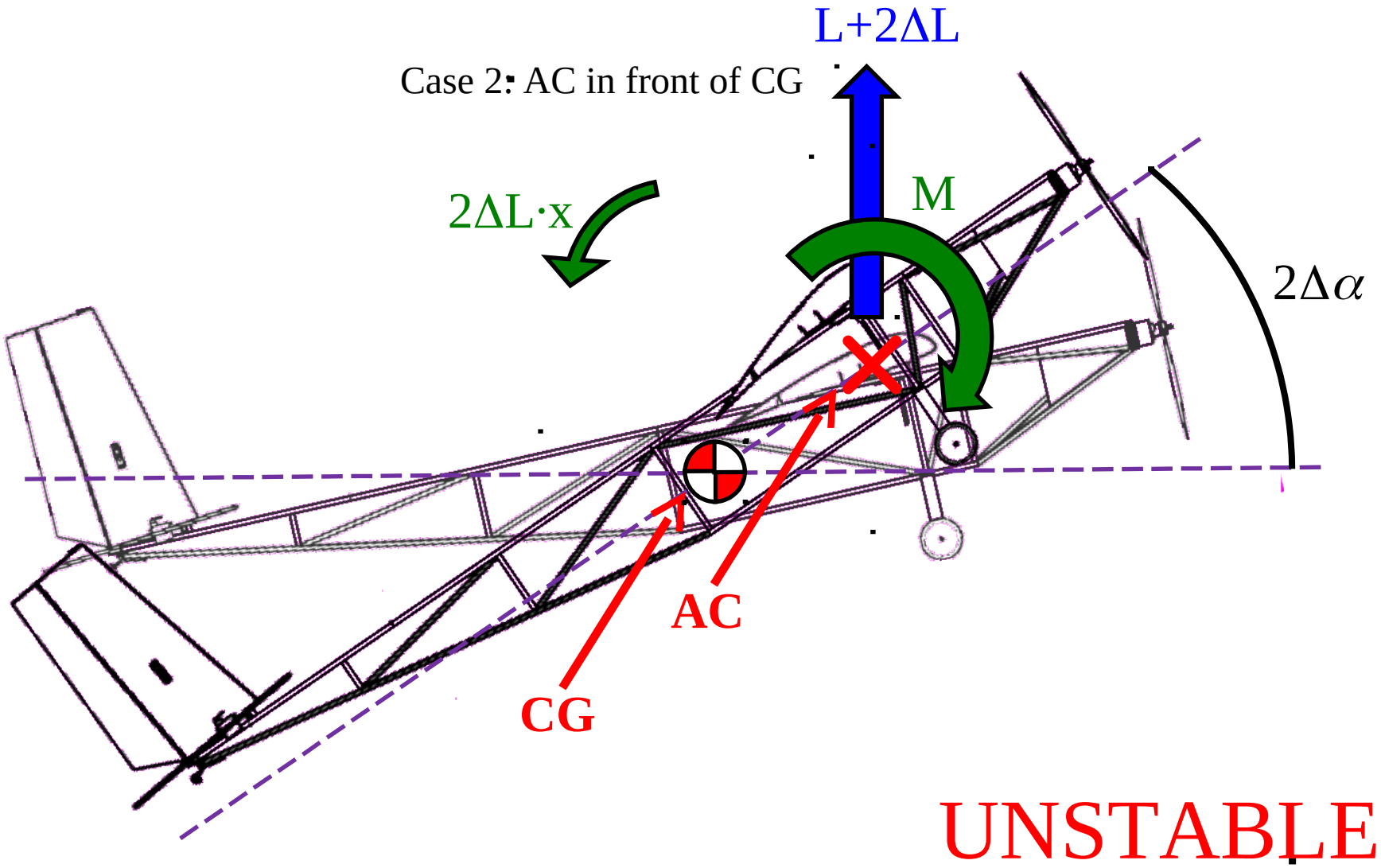

CG and AC

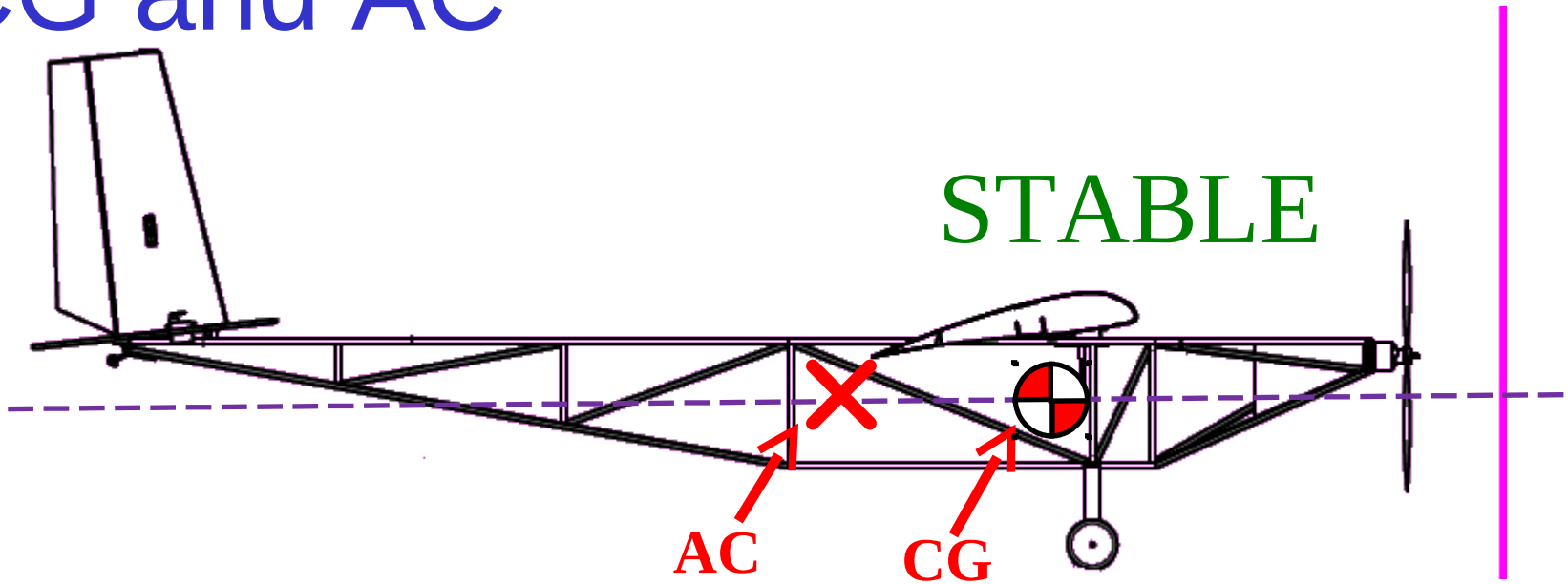

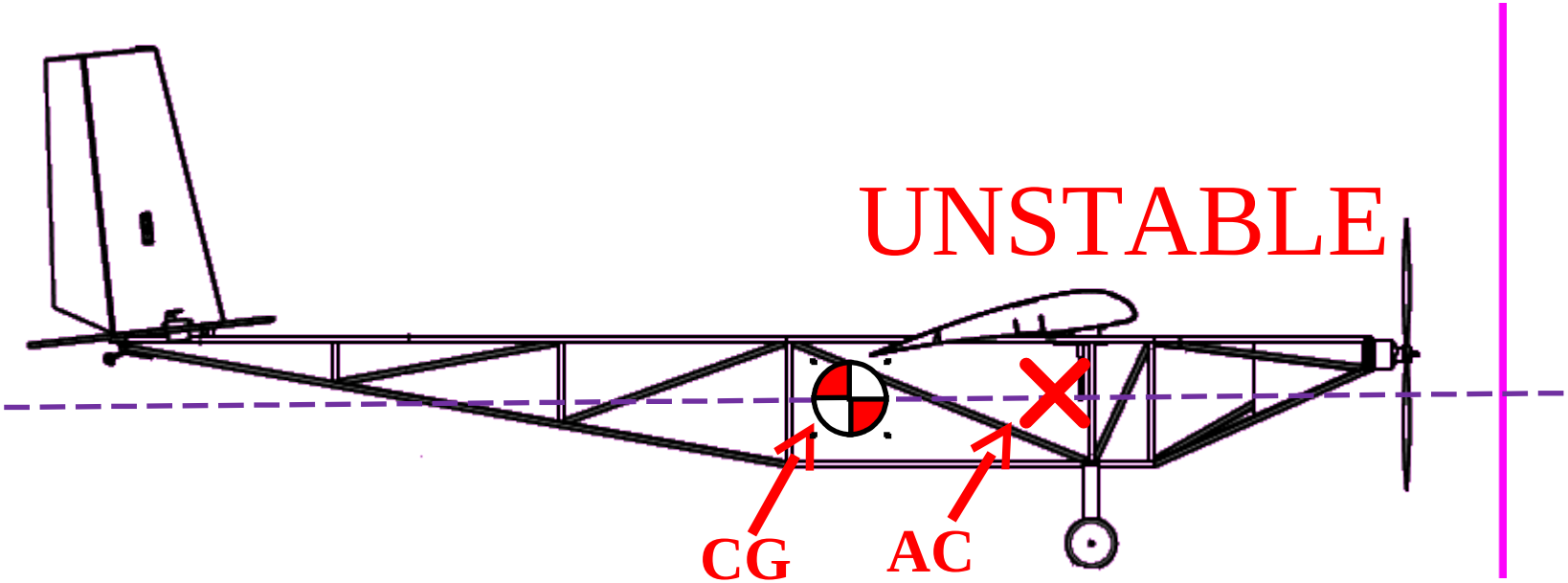

Static Margin

- CG in front of CA → How far?

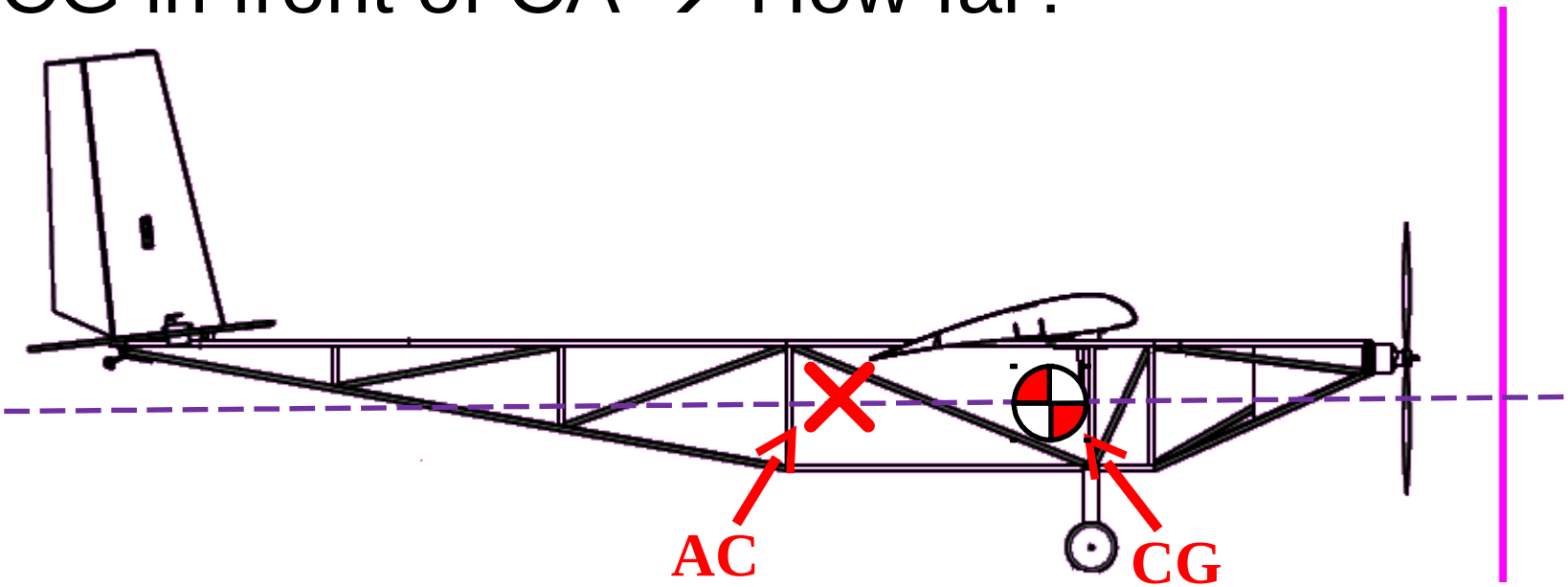

Static Margin

- CG in front of CA → How far?

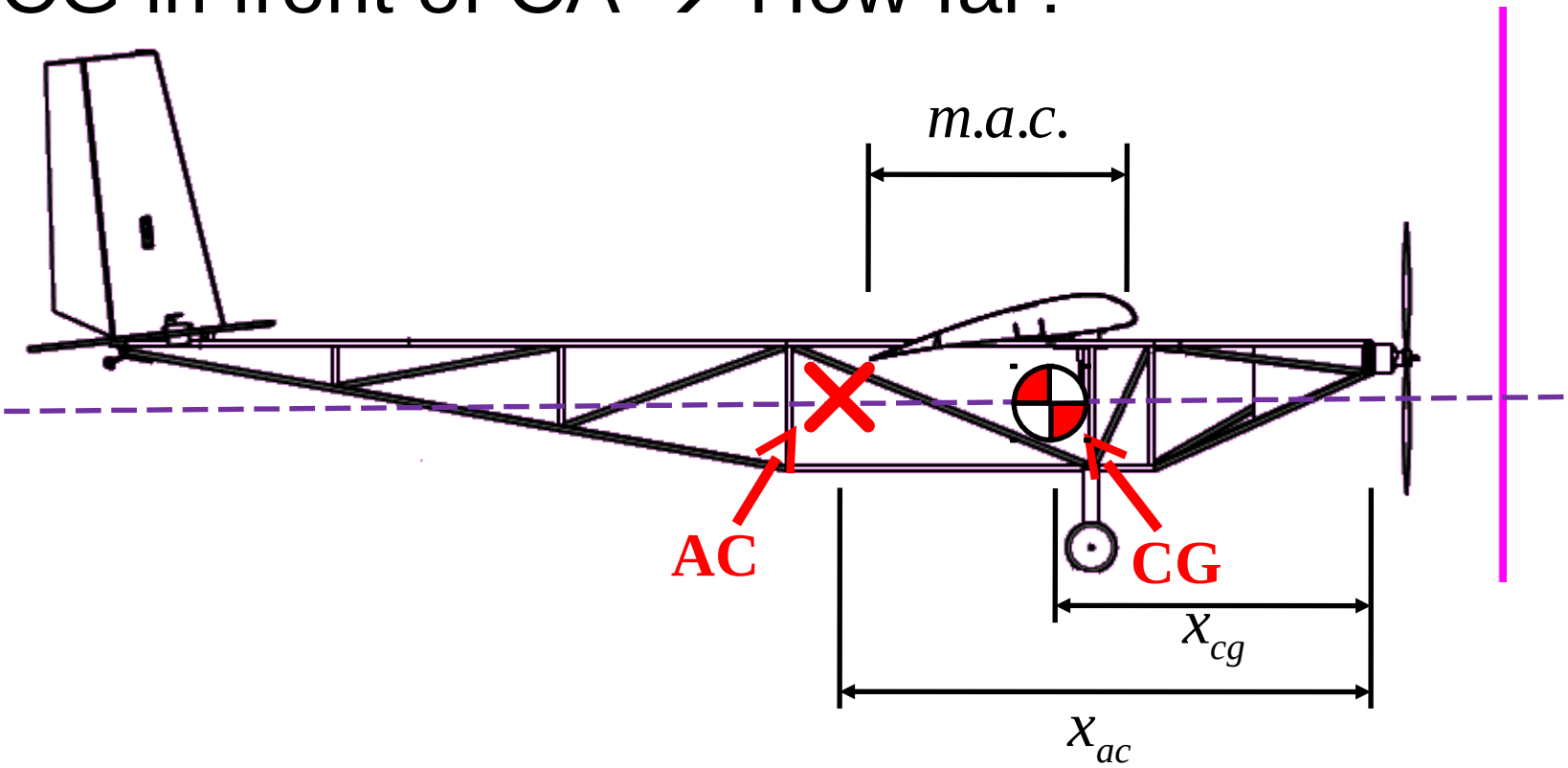

Static Margin

- CG in front of CA → How far?

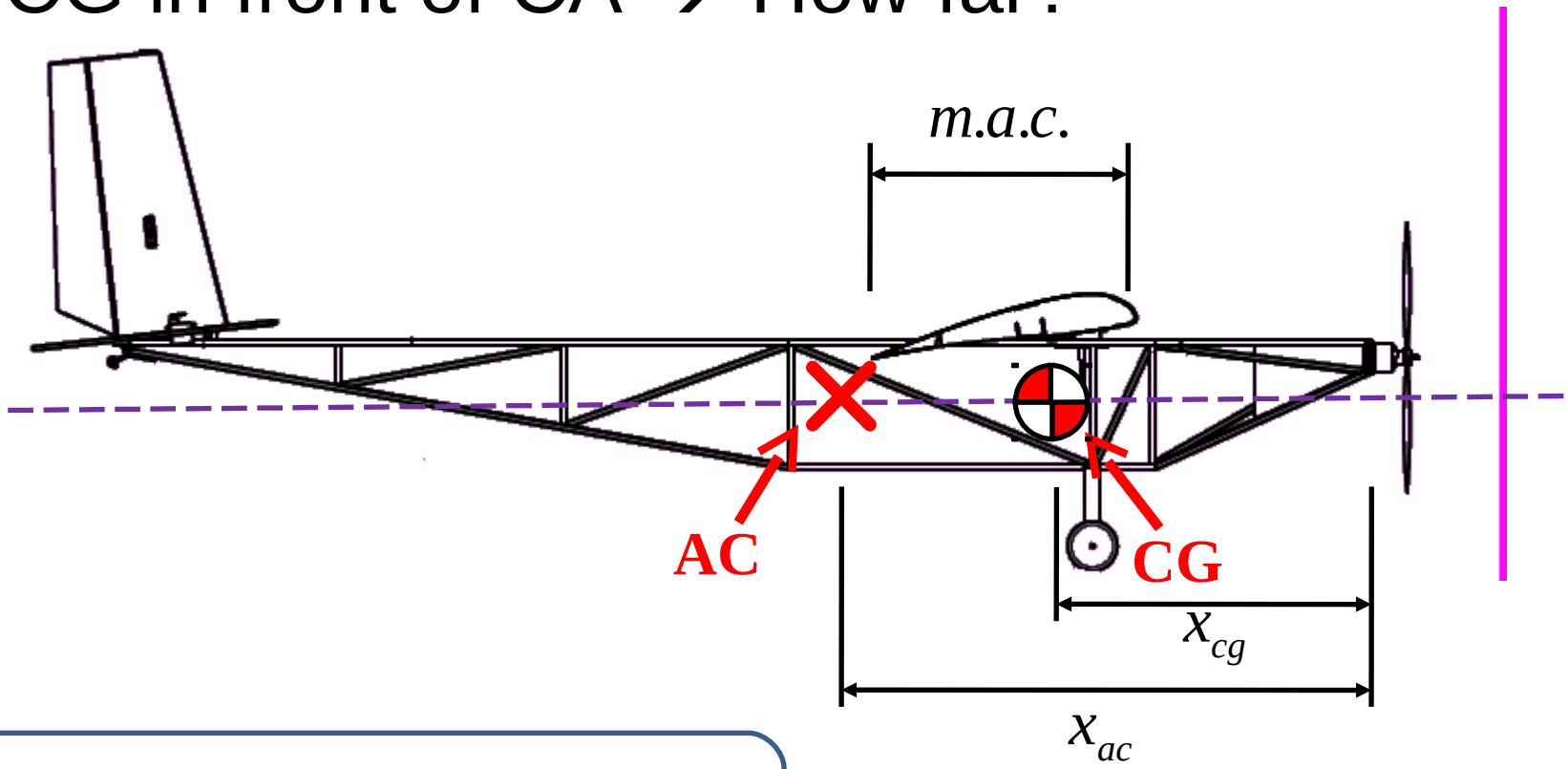

STATIC MARGIN: $$SM = \frac{x_{ac} - x_{cg}}{m.a.c.}$$

Static Margin

- CG in front of CA → How far?

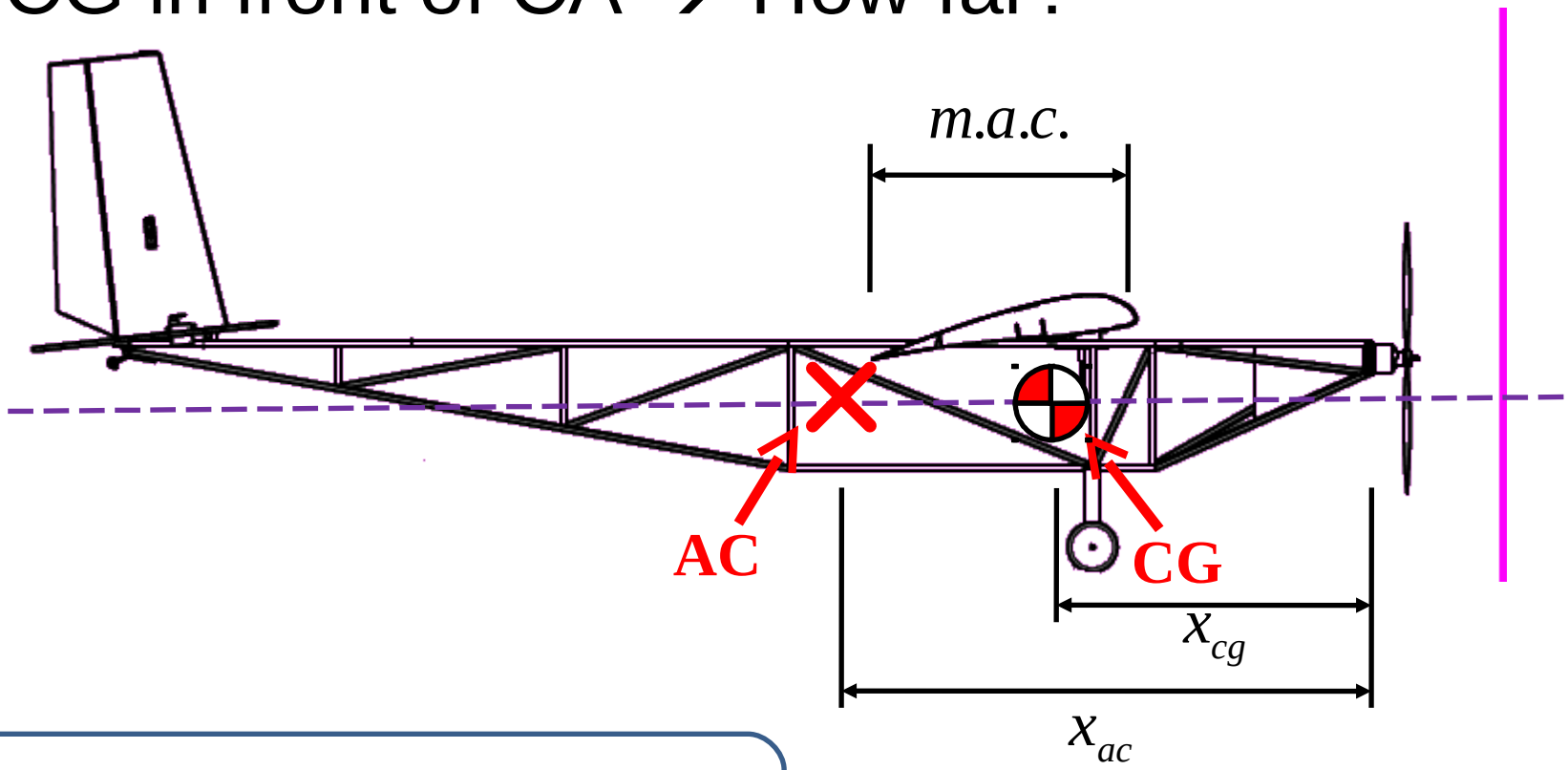

STATIC MARGIN: $$SM = \frac{x_{ac} - x_{cg}}{m.a.c.}$$

SM>0 → STABLE

SM<0 → UNSTABLE

Static Margin

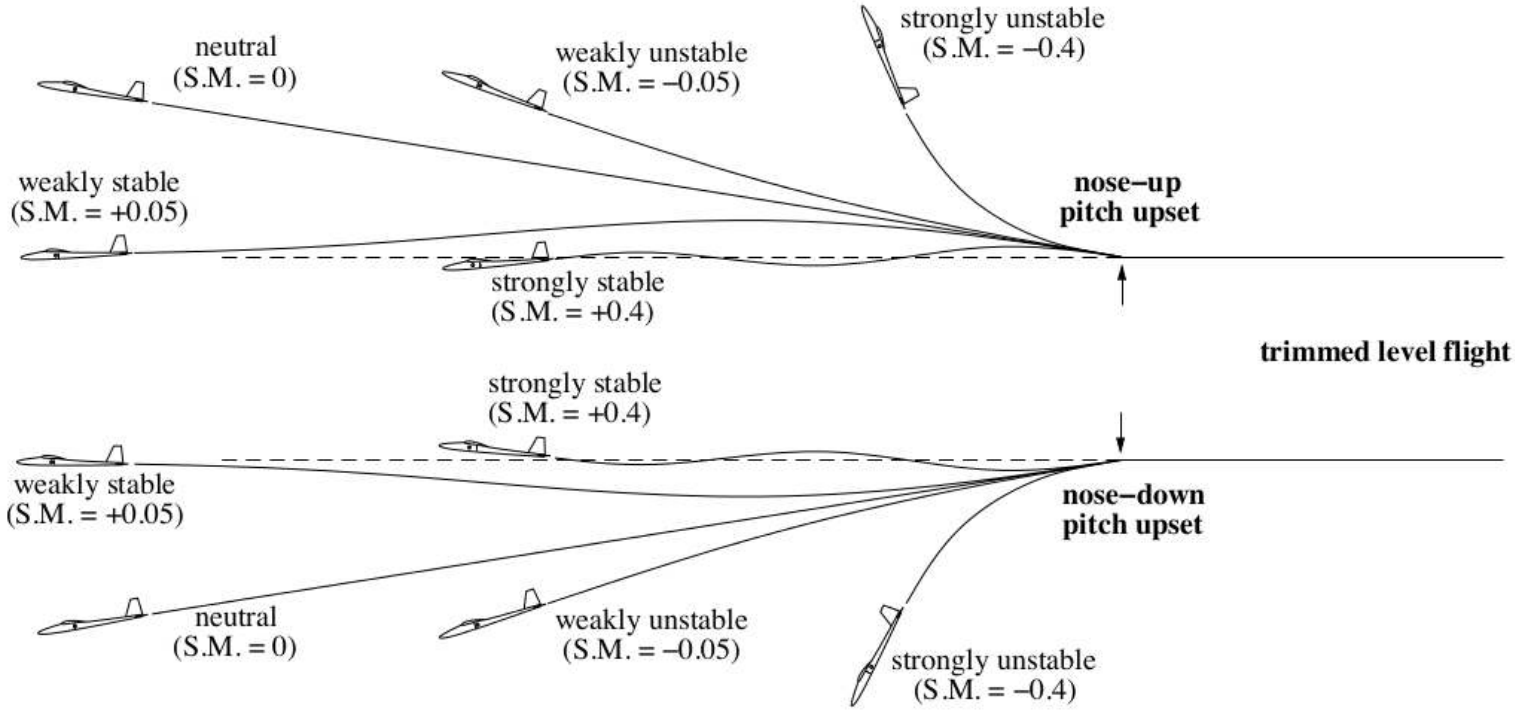

Figure 9.6: Possible flight trajectories for various static margin values(Drela, 2006).

Static Margin

STATIC MARGIN	BEHAVIOR
SM < 0.00	UNSTABLE…
0.00 < SM < 0.15	TOO SENSIBLE
0.15 < SM < 0.20	GOOD!
0.20 < SM < 0.25	TOO SLOW
SM > 0.25	TOO STABLE…

Lateral stability – Wing position

https://history.nasa.gov/SP-367/chapt2.htm#f13c

- High wing: stable
- Mid wing: neutral
- Low wing: unstable

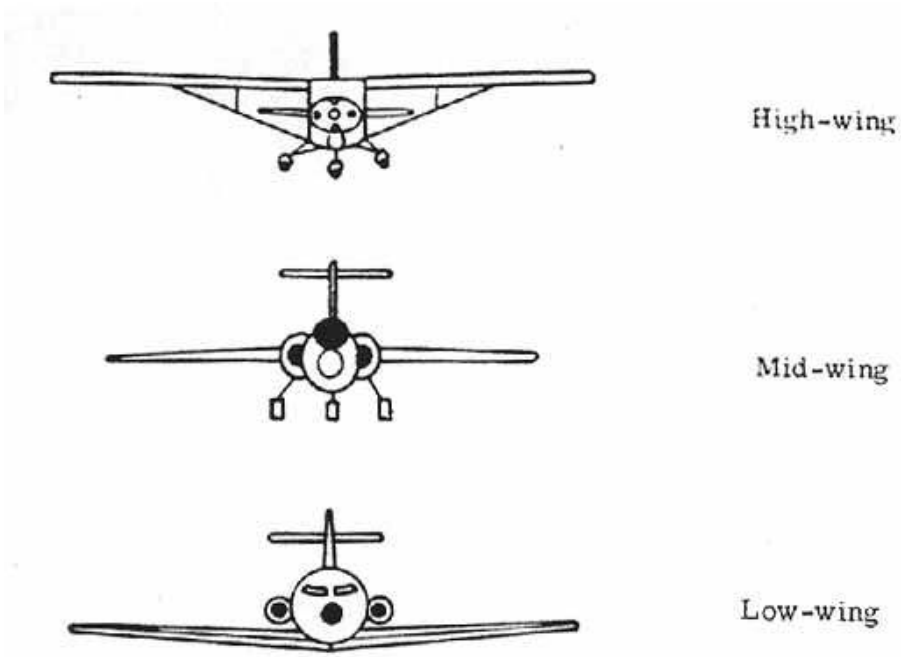

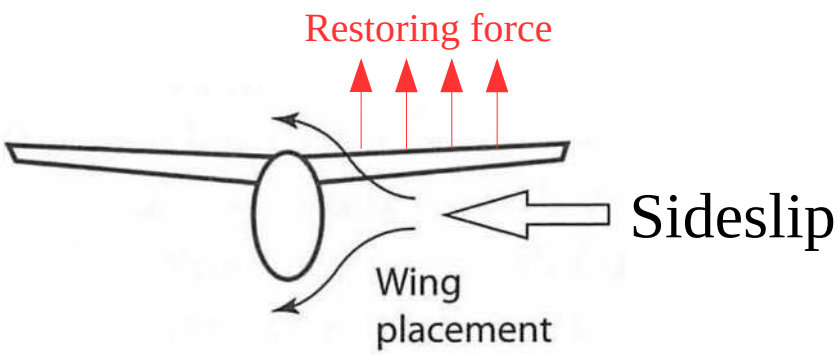

Raymer

Lateral stability – Wing dihedral

- Positive dihedral: stable
- No dihedral: neutral
- Negative dihedral (anhedral): unstable

Table 4.2 Dihedral Guidelines

	Wing position		
	Low	Mid	High
Unswept (civil)	5 to 7	2 to 4	0 to 2
Subsonic swept wing	3 to 7	−2 to 2	−5 to −2
Supersonic swept wing	0 to 5	−5 to 0	−5 to 0

Raymer

B737

F-16

Harrier

wikipedia.org

Lateral stability – Wing sweep

- Positive sweep: stable
- No sweep: neutral
- Negative sweep: unstable

B-52

wikipedia.org

P-51

Su-47

airliners.net

Wing sweep may cause pitch-up

- Tip stall increases nose-up tendency

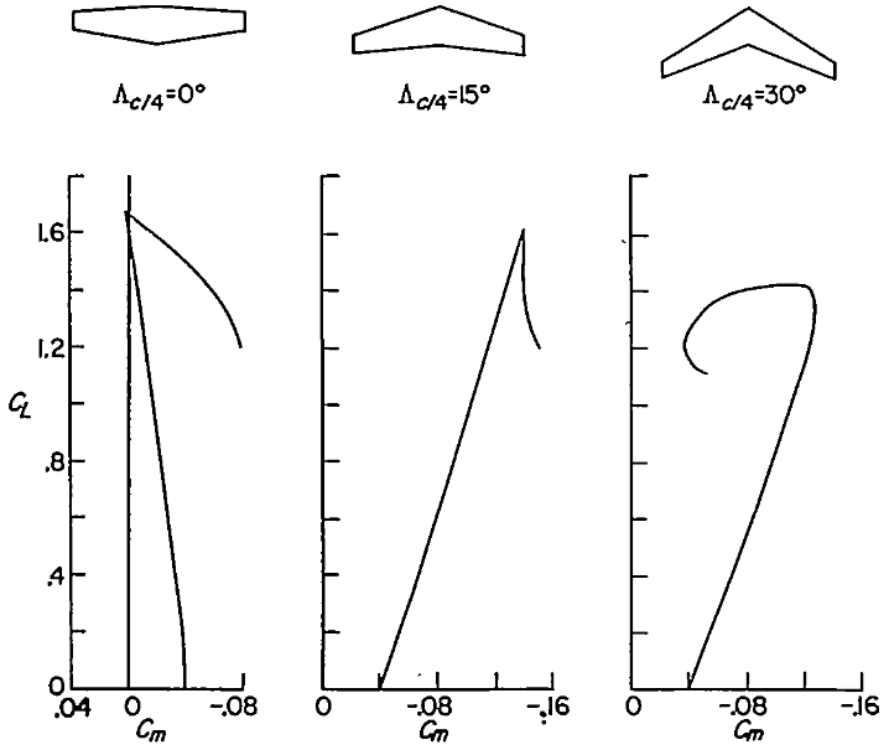

FIGURE 3.—Variations of pitching-moment coefficient with lift coefficient for a family of wings having aspect ratio of 6.0, taper ratio of 0.5, NACA 2415 airfoil sections, and various amounts of sweep. (Data taken from ref. 71.)

NASA TR-1339

F-100 Super Sabre

wikipedia.org

"Sabre Dance"

https://www.youtube.com/watch?v=UPkqTsZmBRc

Wing sweep may cause pitch-up

- This effect can be mitigated by:
  - Using small aspect ratios
  - Wing washout
  - Wing fences or vortex generators
  - Stick pusher

MIG-15

wikipedia.org

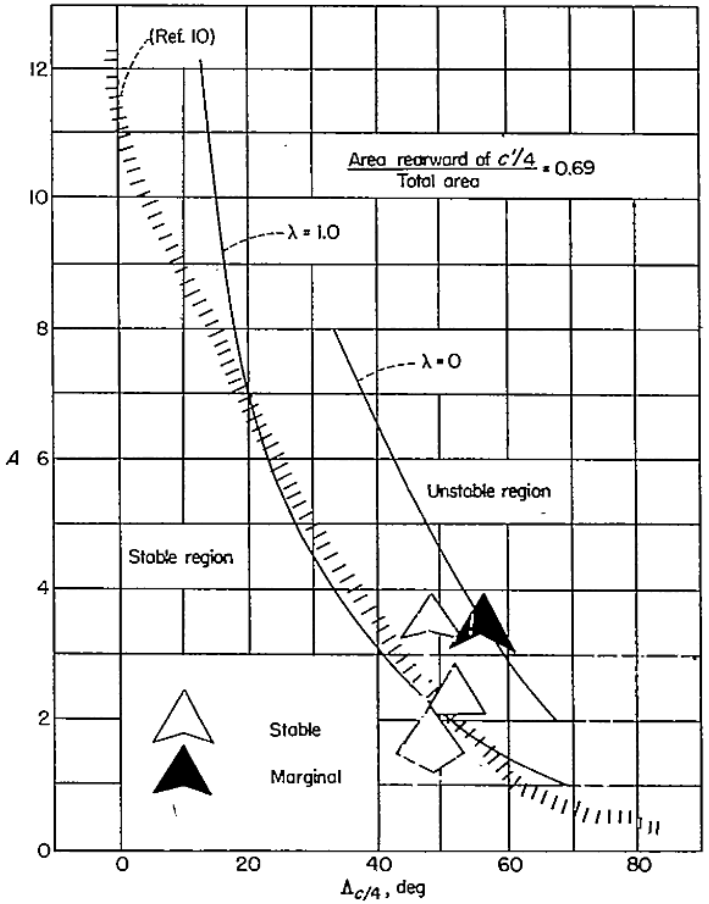

FIGURE 12.—Empirical longitudinal-stability boundary of reference 10 and its relationship to lines of constant area ratio. (Experimental data obtained from refs. 56 and 75.)

NASA TR-1339

Lateral stability

Characteristic	Stable (+1)	Neutral (+0)	Unstable (-1)
Wing position	High	Mid	Low
Wing dihedral	Positive	Zero	Negative
Wing sweep	Positive	Zero	Negative

Do not have more than +1 point!

An-225

wikipedia.org

Volume coefficient gives historical trends to obtain reasonable stability characteristics for conceptual design

Table 6.4 Tail Volume Coefficient

	Typical values	
	Horizontal c_{HT}	Vertical c_{VT}
Sailplane	0.50	0.02
Homebuilt	0.50	0.04
General aviation—single engine	0.70	0.04
General aviation—twin engine	0.80	0.07
Agricultural	0.50	0.04
Twin turboprop	0.90	0.08
Flying boat	0.70	0.06
Jet trainer	0.70	0.06
Jet fighter	0.40	0.07–0.12*
Military cargo/bomber	1.00	0.08
Jet transport	1.00	0.09

*Long fuselage with high wing loading needs larger value.

Raymer

A motorização também afeta a seleção do coeficiente

Aeronave	c_{VT}	Número de motores	Posição dos motores
L1011-500	0,055	3	Asa
Tu-154	0,055	3	Fuselagem
B747-SP	0,057	4	Asa
DC-10-30	0,060	3	Asa
DC-9 S80	0,062	2	Fuselagem
767-200	0,067	2	Asa
B747-200B	0,079	4	Asa
DC-9-50	0,079	2	Fuselagem
F-28-4000	0,085	2	Fuselagem
757-200	0,086	2	Asa
Bae-1-11 495	0,088	2	Fuselagem
A300-B4	0,094	2	Asa
A310	0,098	2	Asa
B737-200	0,100	2	Asa
B737-300	0,100	2	Asa
B727-200	0,110	3	Fuselagem
Bae-146-200	0,120	4	Asa

Roskam

The control surfaces may affect the aircraft field performance

FAR 25.149 (b): VMC is the calibrated airspeed at which, when the critical engine is suddenly made inoperative, it is possible to maintain control of the airplane with that engine still inoperative and maintain straight flight with an angle of bank of not more than 5 degrees.

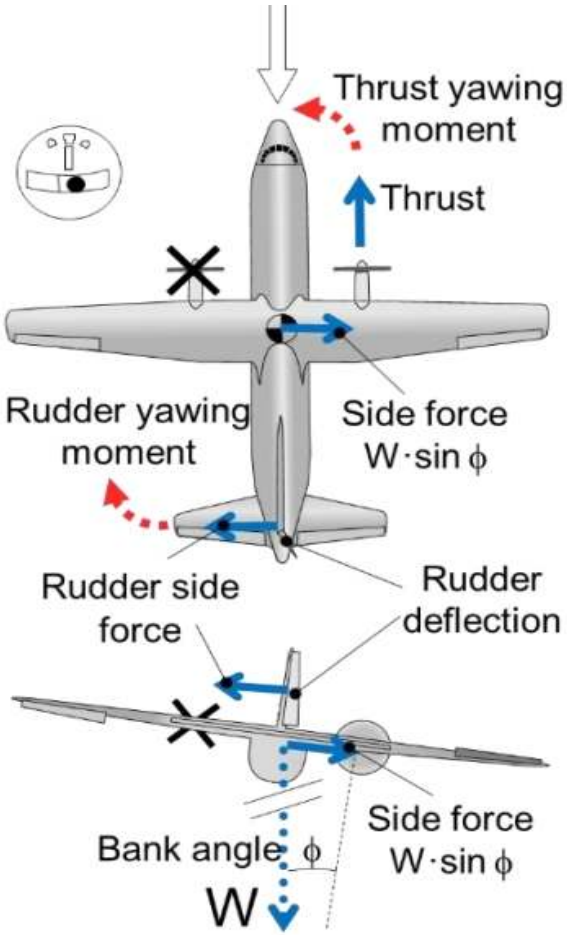

FAR 25.107 (b)3: V2 > VMC
Small rudder → Increases VMC →
→ Increases V2 → Increases takeoff distance

Horlings
https://www.avioconsult.com/downloads/Control%20and%20Performance%20During%20Asymmetrical%20Powered%20Flight.pdf

The horizontal tail should be carefully placed to avoid deep stall

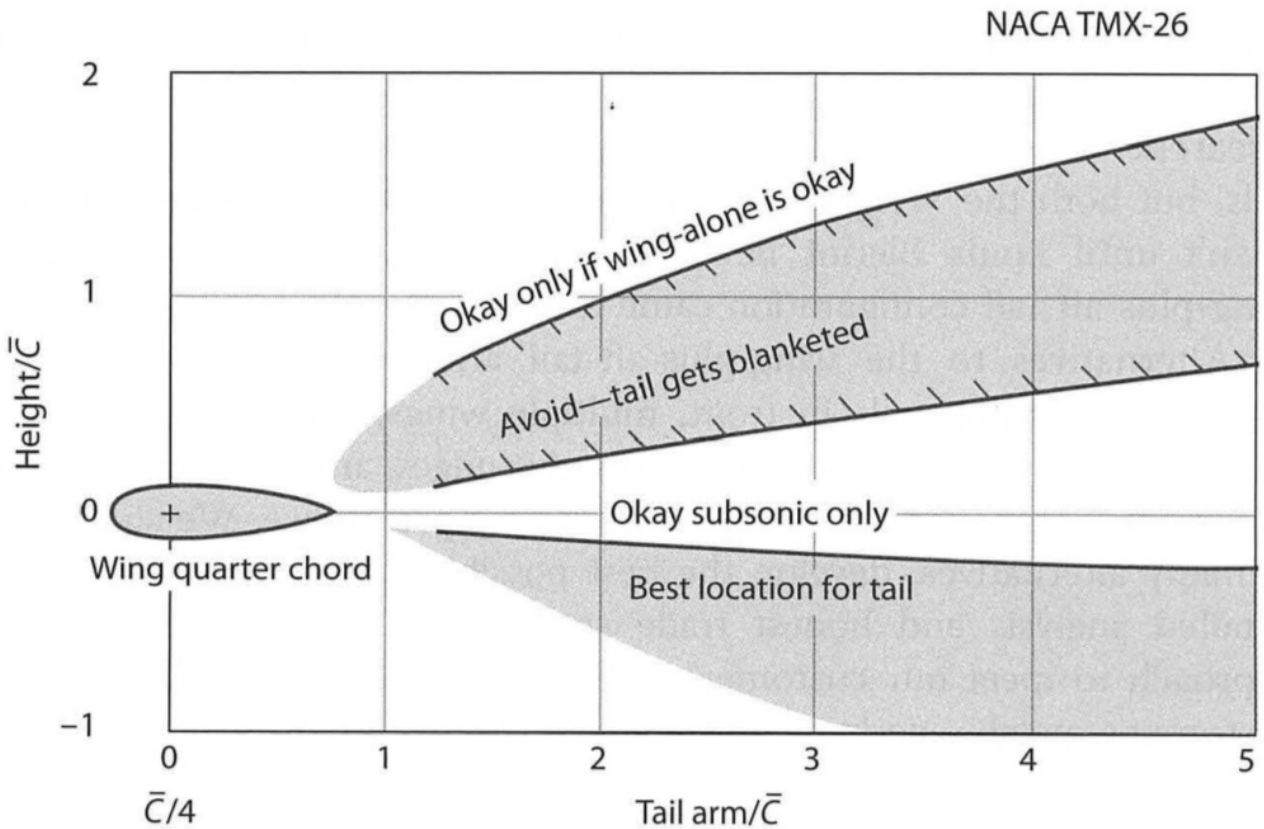

Fig. 4.33 Aft tail positioning.

Raymer

Control Surfaces

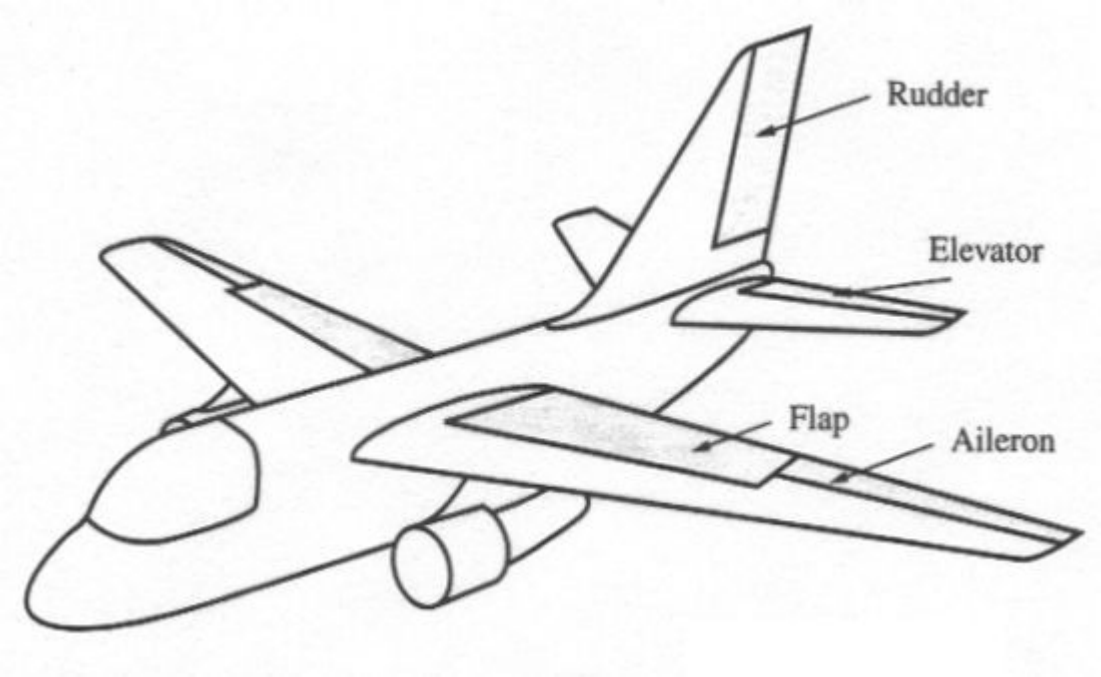

http://www.aerospaceweb.org/question/history/q0103.shtml

Control Surfaces

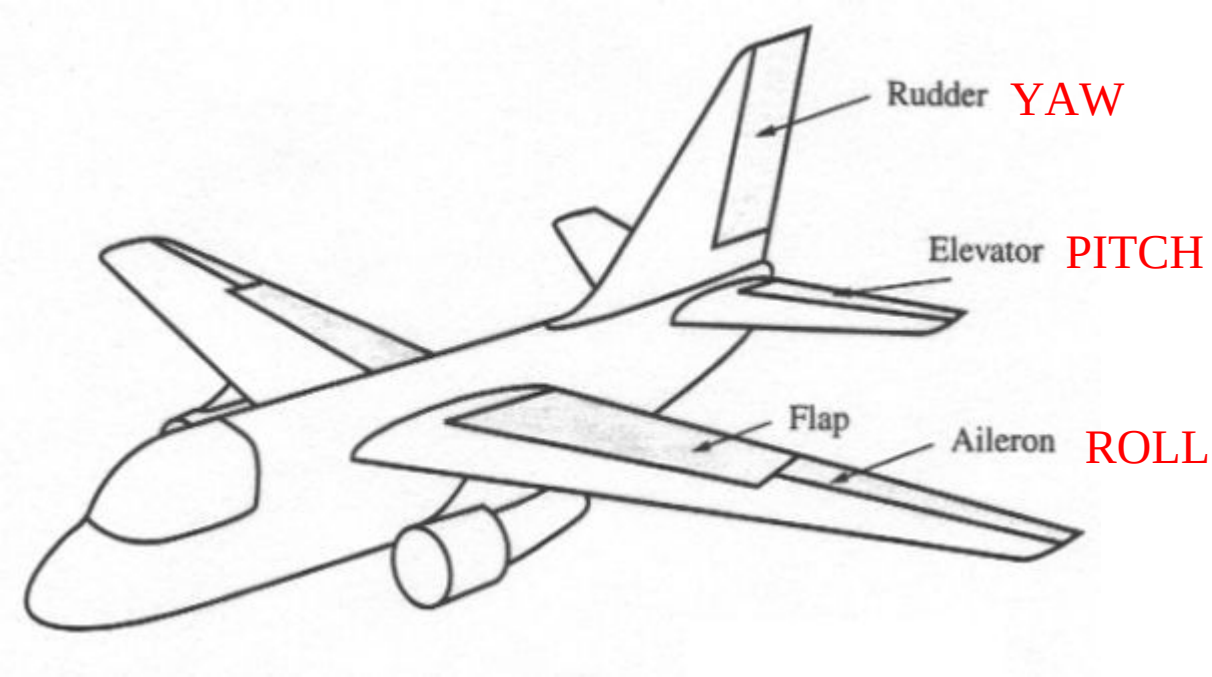

http://www.aerospaceweb.org/question/history/q0103.shtml

Sizing control surfaces

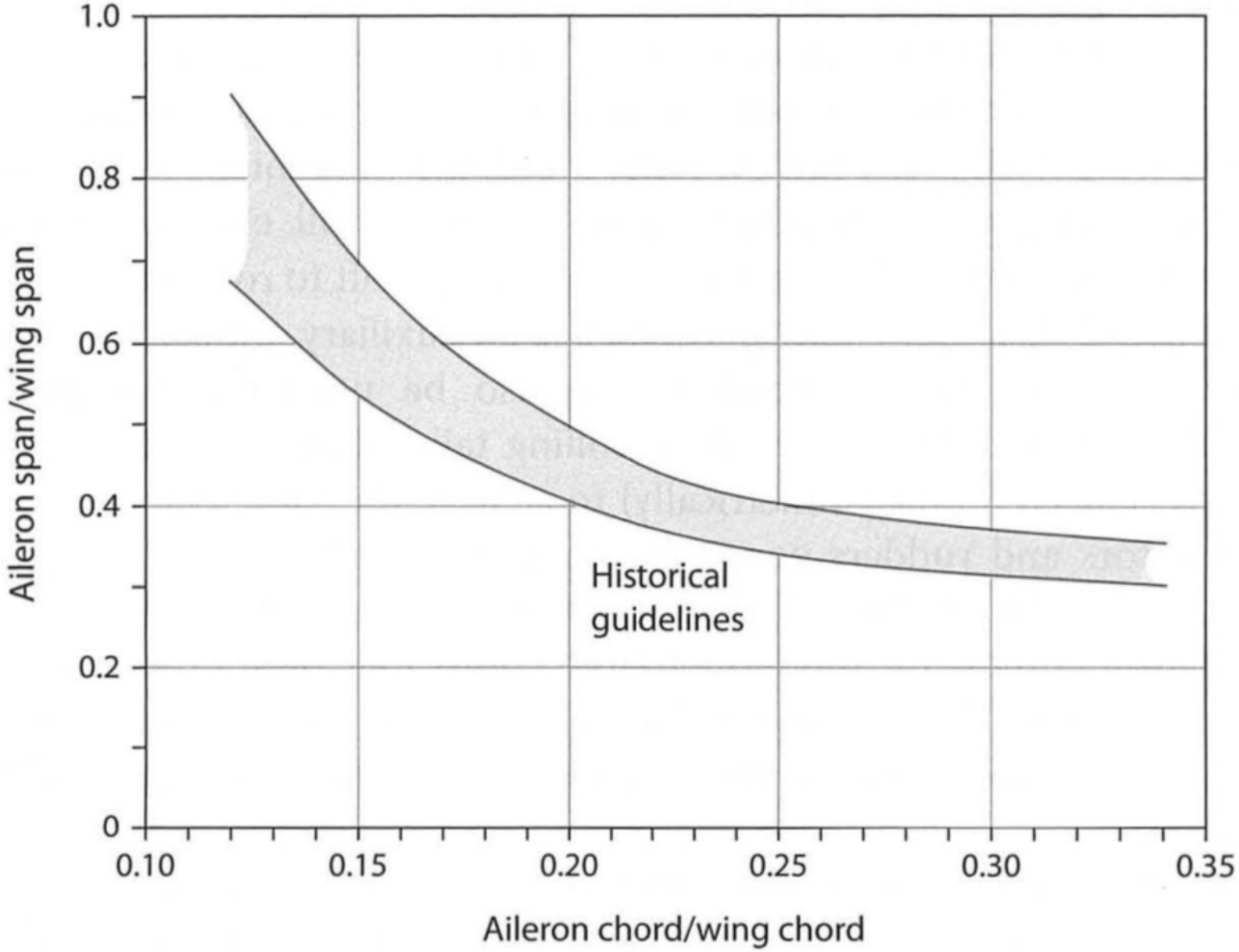

Raymer

Sizing control surfaces

Table 6.5 Control Surface Sizing Guidelines

Aircraft	Elevator C_e/C	Rudder C_r/C
Fighter/attack	0.30*	0.30
Jet transport	0.25†	0.32
Jet trainer	0.35	0.35
Biz jet	0.32†	0.30
GA single	0.45	0.40
GA twin	0.36	0.46
Sailplane	0.43	0.40

*Supersonic usually all-moving tail without separate elevator.
†Often all-moving plus elevator.

Raymer

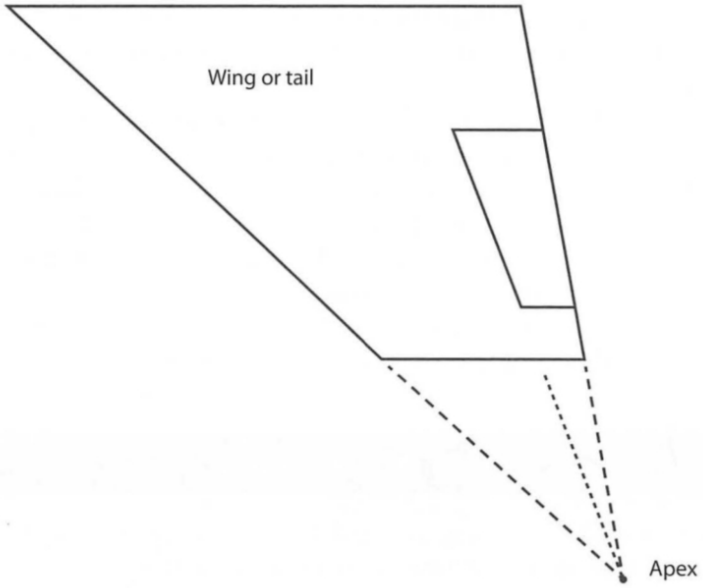

Control surface usually occupies a constant chord fraction

Notched control surfaces reduce stick loads

https://www.jetphotos.com/photo/9346742

EMB-110

Notched control surfaces reduce stick loads

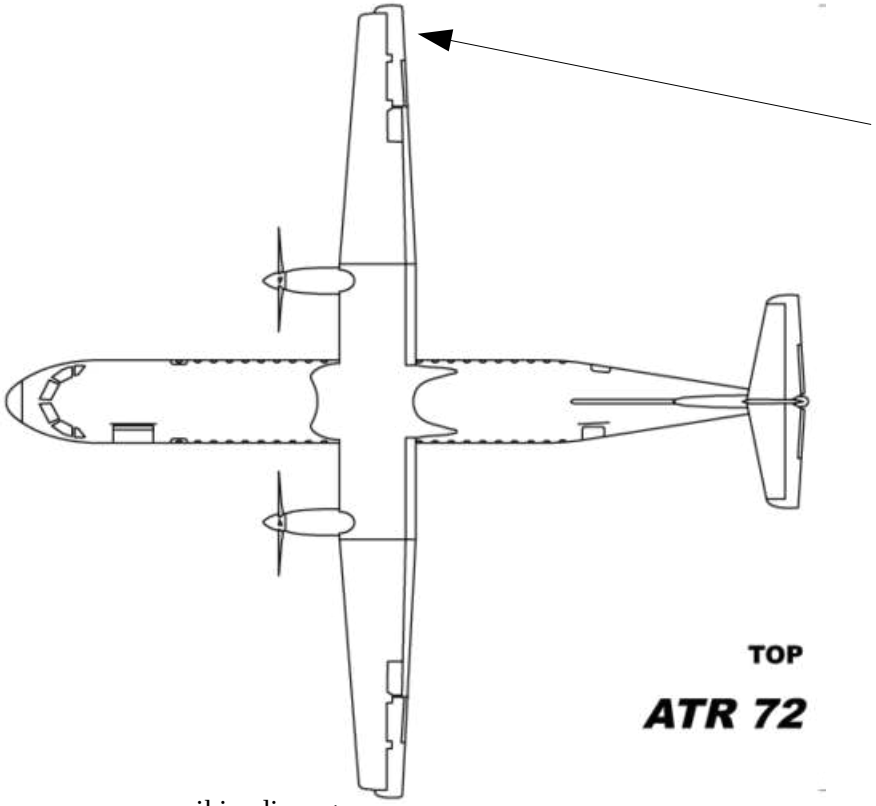

wikipedia.org

https://hiveminer.com/Tags/atr72%2Cfab

Variable incidence tails trim the airplane with smaller drag penalty

wikipedia.org

ERJ-170

Variable incidence wing

F-8 Crusader

wikipedia.org

- Wing could vary its incidence angle by 7 degrees
- The aircraft would have smaller AoA at takeoff and landing, giving better visibility for the pilot
- Weight penalty

https://www.youtube.com/watch?v=t3wzoJt8lpU

Propwash may interfere on tail design

wikipedia.org

EMB-110 P1

wikipedia.org

EMB-110 P1A

We must avoid blanketing the rudder to ensure spin recovery

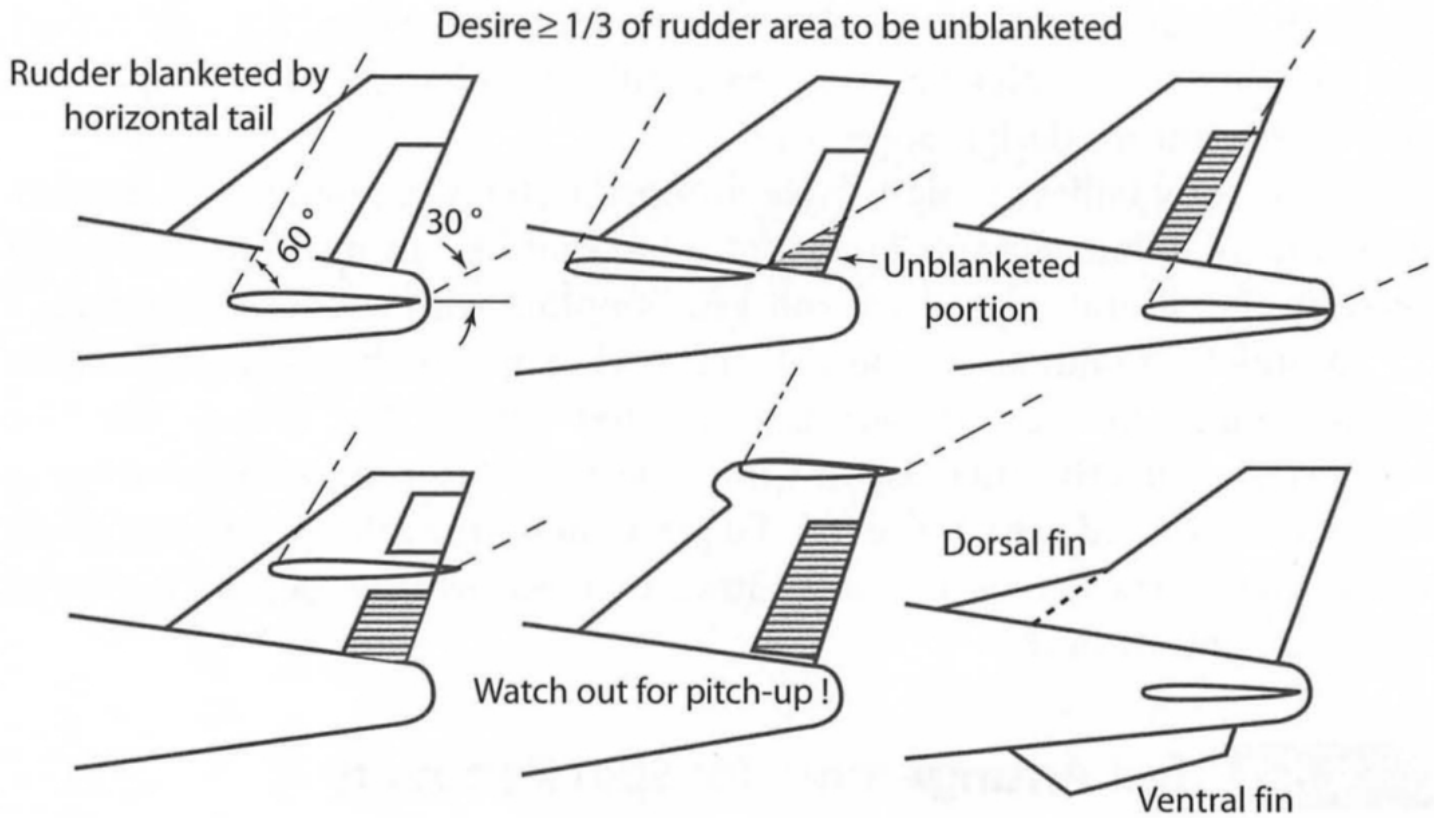

Fig. 4.37 Tail geometry for spin recovery.

Raymer

R-99

Strakes

B-2

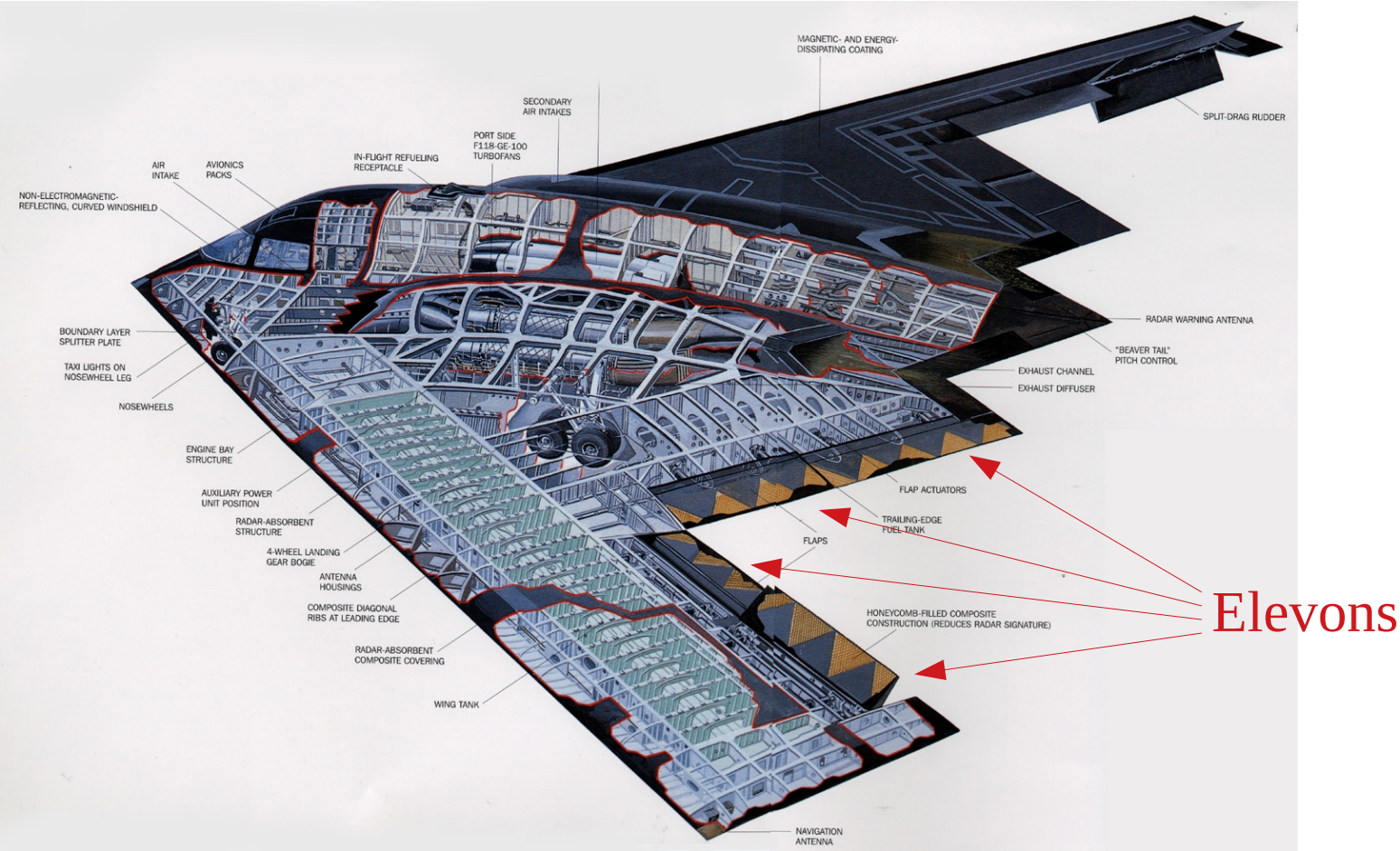

http://deepak-the-plane-fanatic.blogspot.com/2011/02/wonders-of-fbw.html

B-2

Drag rudder

https://www.quora.com/Does-the-US-Air-Forces-B-2-Spirit-stealth-aircraft-basically-open-up-an-air-brake-on-a-wing-to-yaw-since-it-doesnt-have-a-rudder

https://www.youtube.com/watch?v=YNnM_8WahcQ

F-22

Ailerons deflected up

F-22

- Wing load alleviation, reducing root bending moment

F-22

Rudders deflected up during takeoff

https://www.youtube.com/watch?v=sQY4xNbtkJI

F-22

Rudders deflected up during takeoff

https://www.youtube.com/watch?v=sQY4xNbtkJI

- Provide additional pitching moment due to their cant angle

Road map

- Center of Gravity
- Stability & Control
- Landing Gear
- Structures

Introduction

- Landing gear
  - Take-off run
  - Landing run

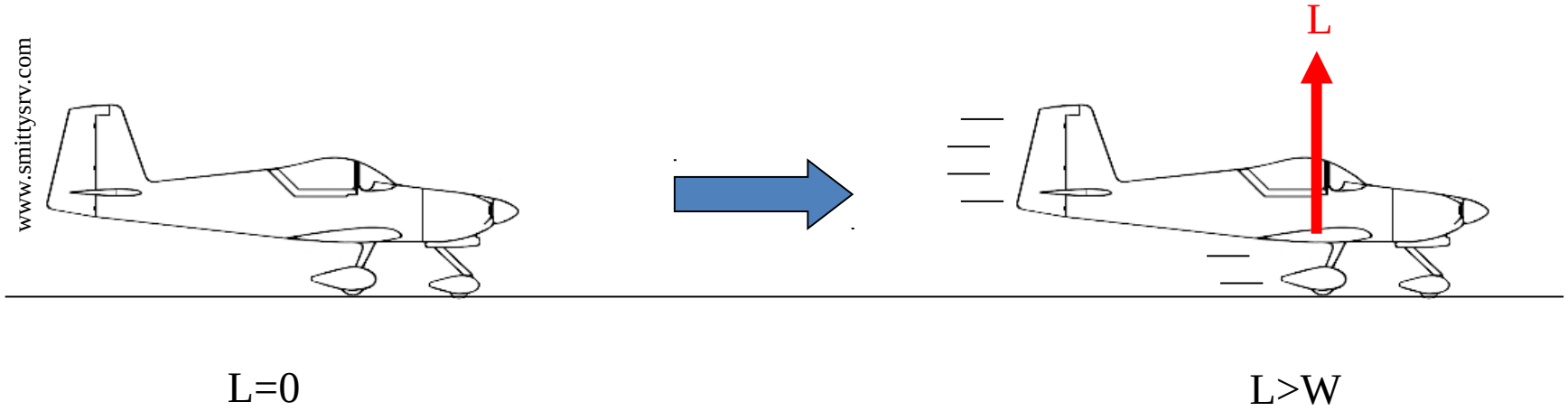

Landing Gear Types

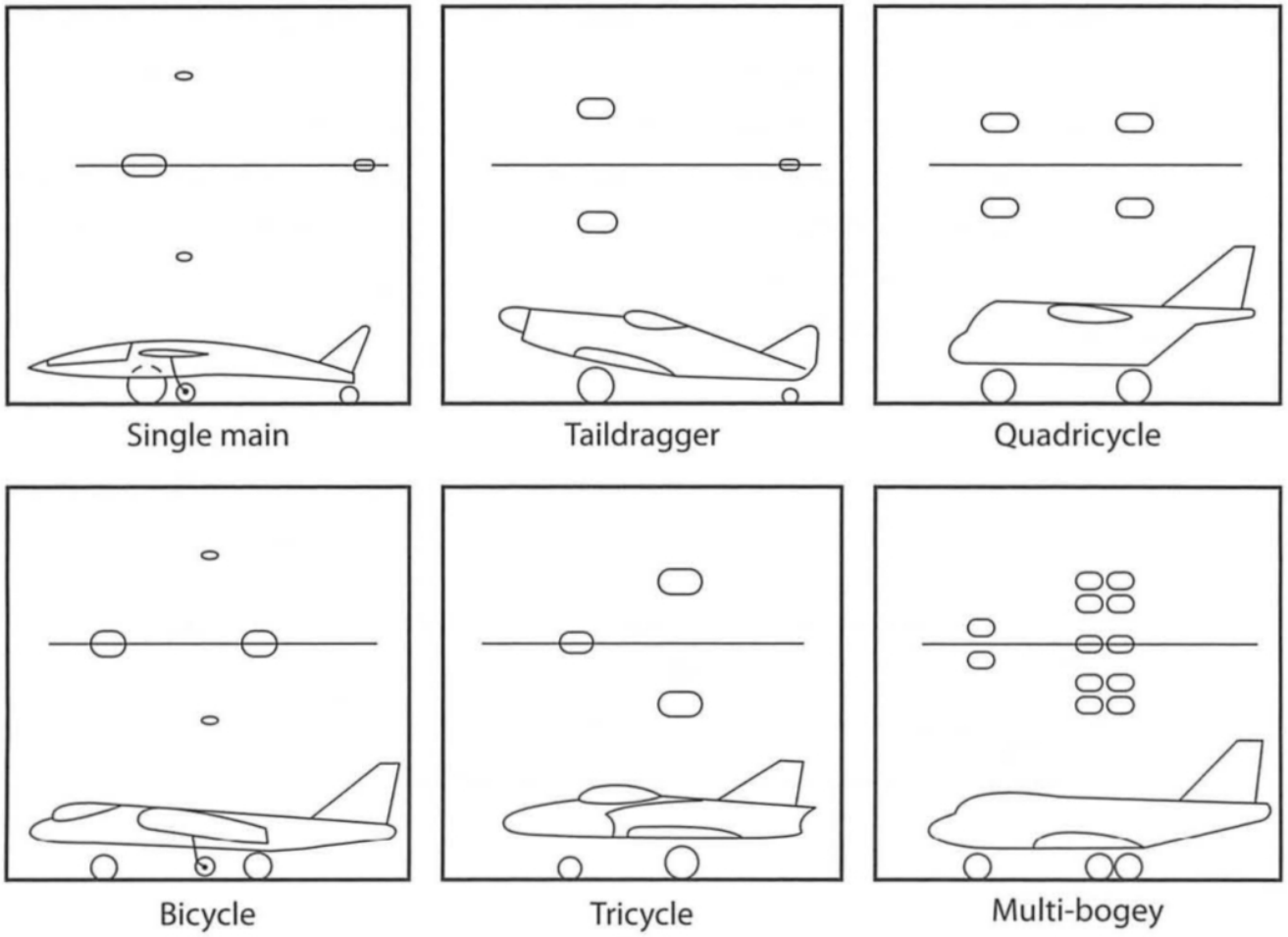

Raymer

Landing Gear Types

www.fiddlersgreen.net

Minimoa
Single

http://www.aerospaceweb.org/question/design/q0200.shtml

B-52
Quadricycle

Landing Gear Types

http://www.aerospaceweb.org/question/design/q0200.shtml

U-2
Bicycle

juliantheaviator.wordpress.com

AV-8 Harrier
Bicycle

Landing Gear Types

C-5
Multi-bogey

Cessna 172
Tricycle

wikipedia.org

Tricycle vs Taildragger

Type	Advantages	Disadvantages
Tricycle	•Ground control; •Ground stability; •Optimum AoA during run; •Runway visibility.	•Heavier; •More complex.
Taildragger	•Simpler; •Lighter; •Less drag.	•Airplane is not leveled when still; •Unstable during run; •Variable AoA during run.

Tricycle vs Taildragger

Tricycle vs Taildragger

http://replicainscale.blogspot.com/2011/08/walkin-dog-chief-goes-to-france-hawks.html

Criteria

- Ground clearance
- Tipback angle
- Tail strike
- Weight distribution
- Overturn angle

Criteria

- Ground clearance
- Tipback angle
- Tail strike
- Weight distribution
- Overturn angle

Ground clearance

Used to constraint <u>landing gear height</u>

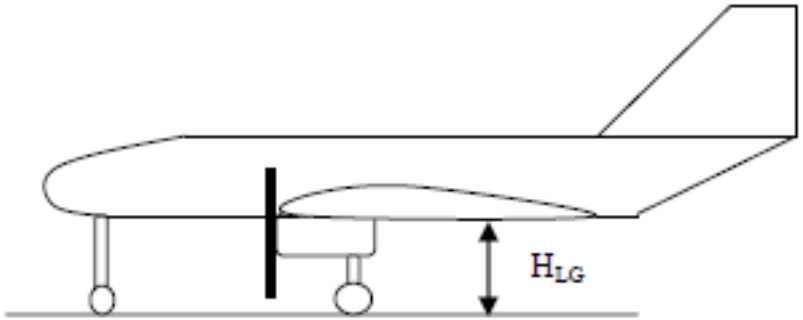

No	Aircraft Components	Clearance (m)	Remarks
1	Fuselage	0.2–1.2	
2	Rear fuselage	0.2–0.5	During take-off rotation
3	Wing	0.2–1.5	Includes flap clearance
4	Turbofan/turbojet engine	0.5–1.5	Inlet clearance
5	Propeller (piston or turboprop) –landplane	0.2–1	Tip clearance
6	Propeller (piston or turboprop) –seaplane	1–2	Tip clearance
7	Store/fuel tank/pitot tube/antenna/probe	0.2–0.6	

The B737 had to change the engine inlet to avoid excessive landing gear height

wikipedia.org

B737-200

B737-800

Criteria

- Ground clearance
- Tipback angle
- Tail strike
- Weight distribution
- Overturn angle

Tipback angle

Used to constraint the <u>position of the main landing gear</u>

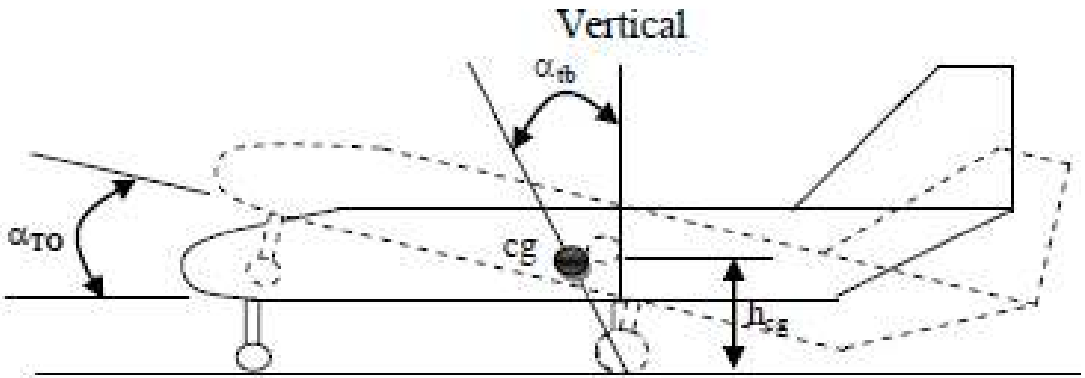

$$\alpha_{tipback} = \arctan\left(\frac{x_{mlg} - x_{cg,aft}}{h_{lg}}\right) \geq \alpha_{to} + 5^{o}$$

Criteria

- Ground clearance
- Tipback angle
- Tail strike
- Weight distribution
- Overturn angle

Tail strike

Used to constraint the <u>position of the main landing gear</u>

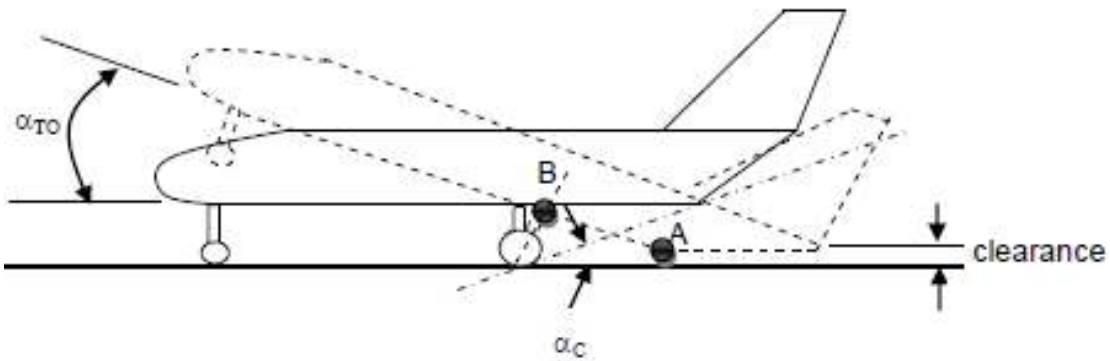

$$\alpha_c = \arctan\left(\frac{h_{lg}}{AB}\right) \geq \alpha_{to}$$

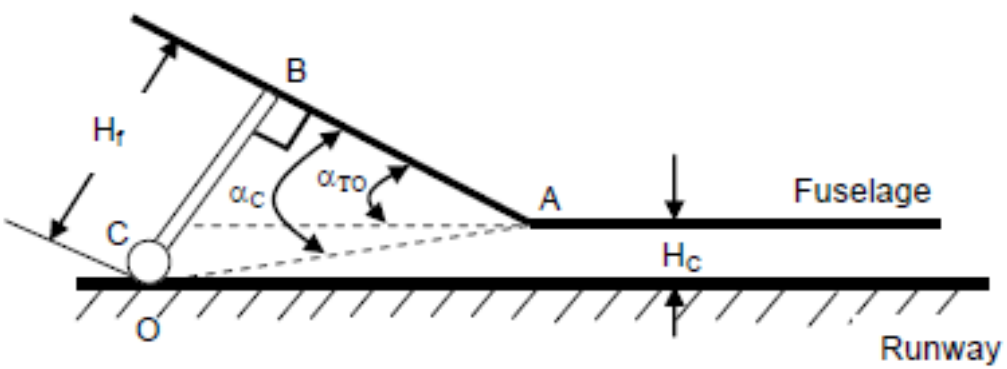

$$H_c \geq 0,30m$$

Criteria

- Ground clearance
- Tipback angle
- Tail strike
- Weight distribution
- Overturn angle

Weight distribution

Used to calculate the <u>position of the nose landing gear</u>

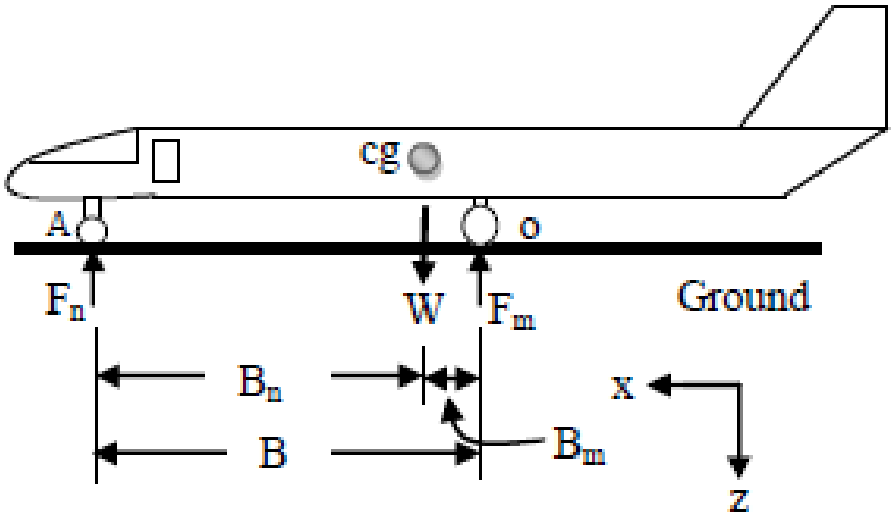

$$x_{nlg} = x_{cg,aft} - \frac{1-\eta}{\eta}\left(x_{mlg} - x_{cg,aft}\right)$$

Repeat for forward CG

η → fraction of the weight carried by the nose landing gear

$$0,05 \le \eta \le 0,20$$

Weight distribution

iasa-intl.com

Criteria

- Ground clearance
- Tipback angle
- Tail strike
- Weight distribution
- Overturn angle

Overturn angle

Raymer

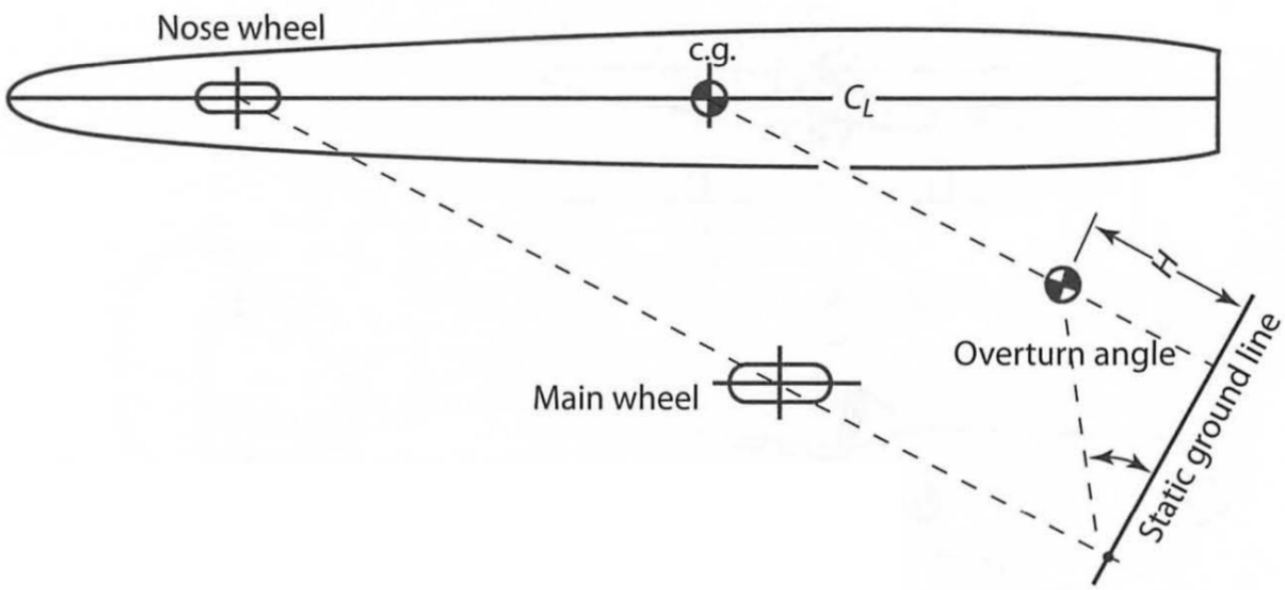

Overturn angle < 63 deg

Water spray

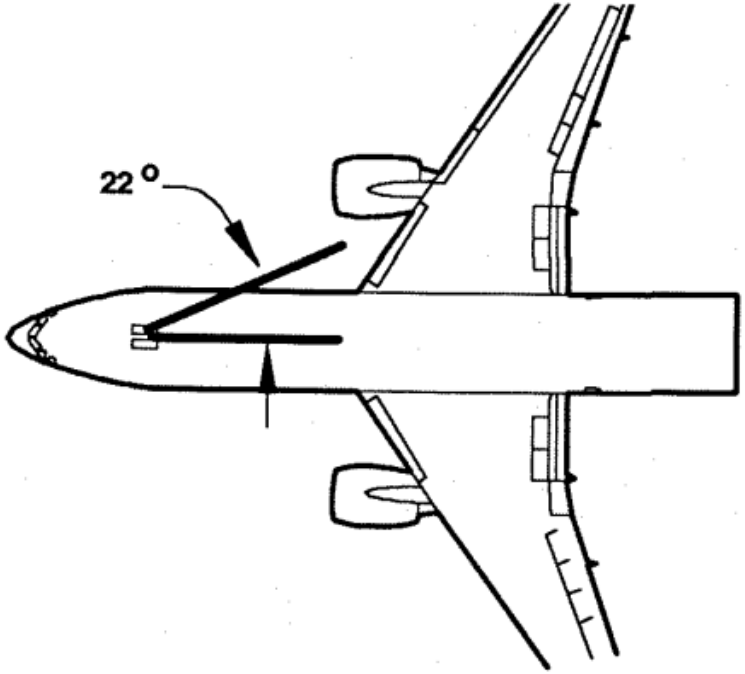

Berry, ICAS-94-6.4.4

A350 XWB

airbus.com

Retraction

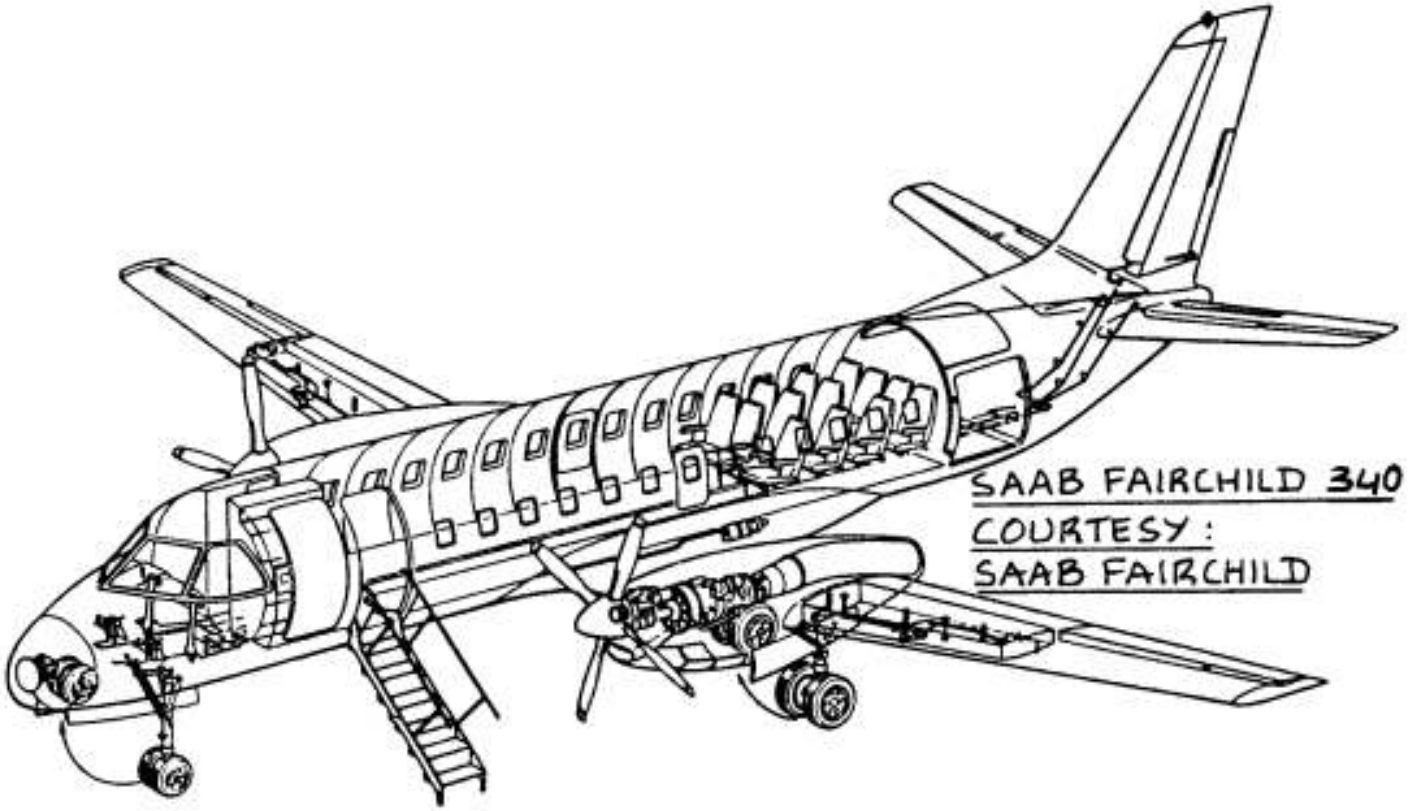

Roskam

Retraction

DC-10

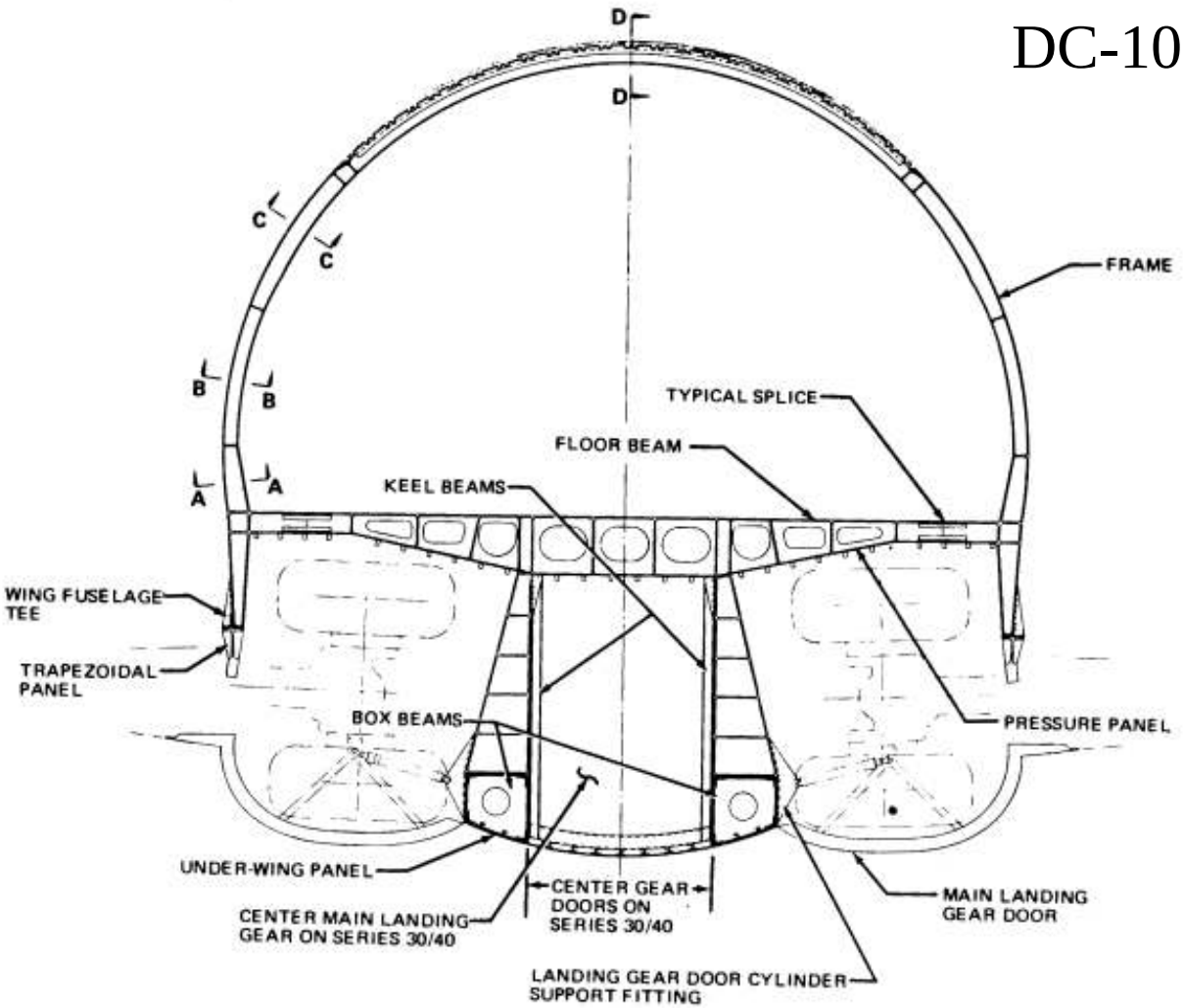

Roskam

Retraction

https://travelforaircraft.wordpress.com

Grumann Albatross

Retraction

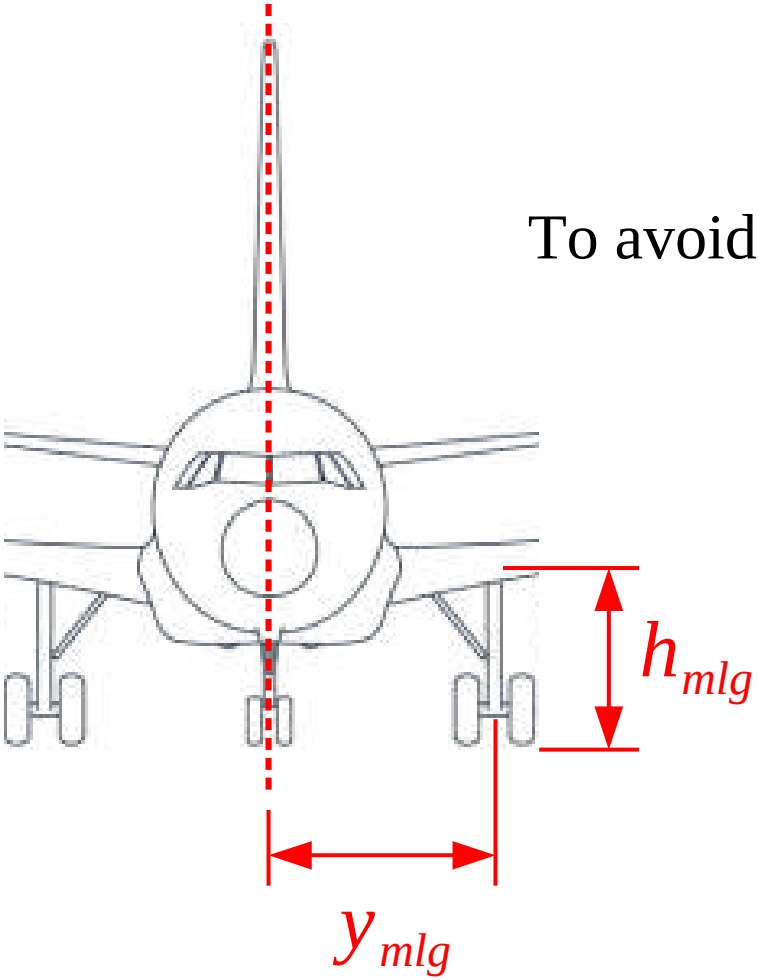

To avoid collision between landing gears:

$$h_{mlg} < y_{mlg}$$

Goal for Conceptual Design

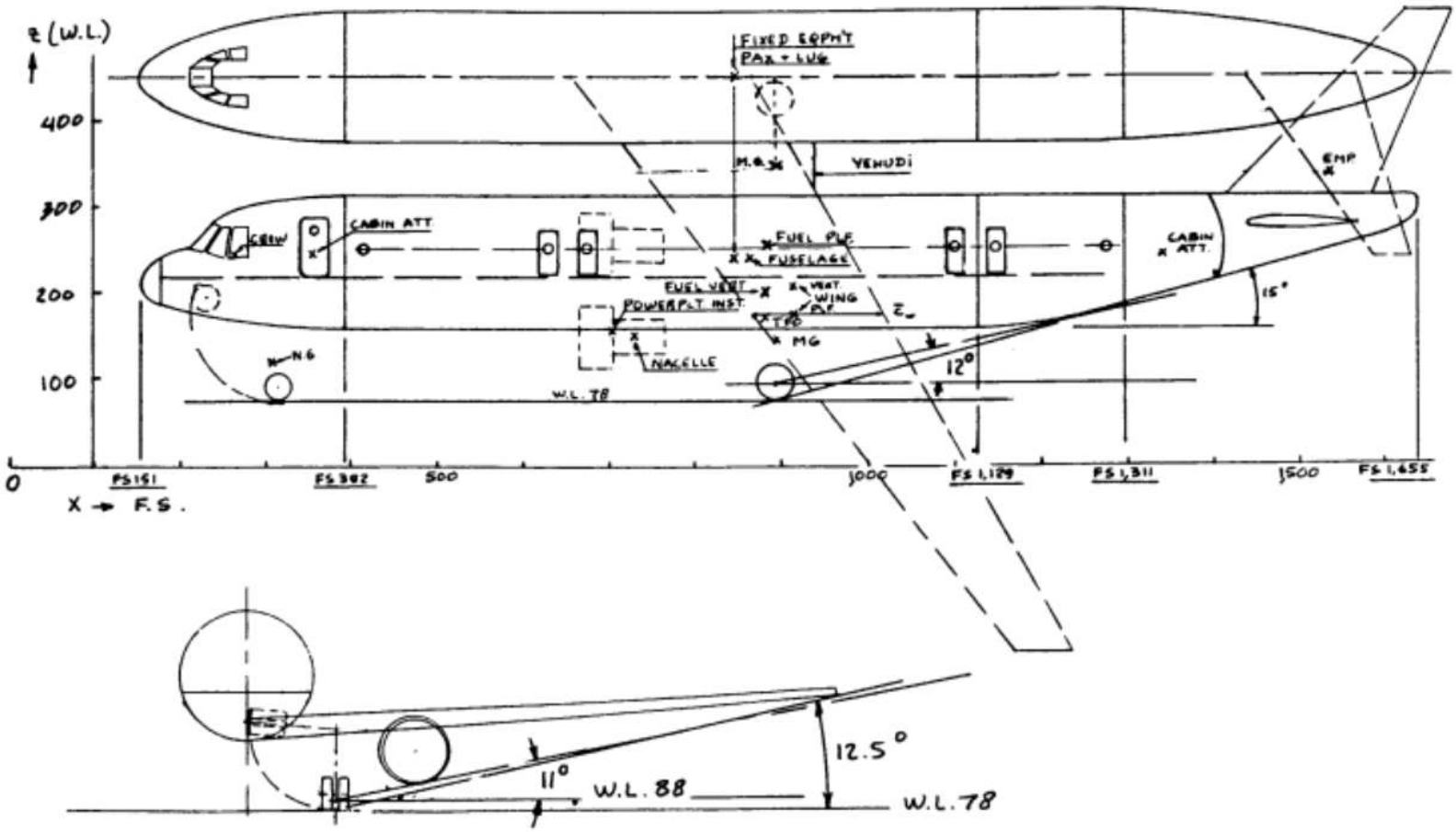

Roskam

Road map

- Center of Gravity
- Stability & Control
- Landing Gear
- Structures

Structural Considerations

- During the Conceptual Aircraft Design, we usually need to define:
  - Major load paths
  - Primary structural components
  - Material selection

- Detailed structural design is performed in posterior phases

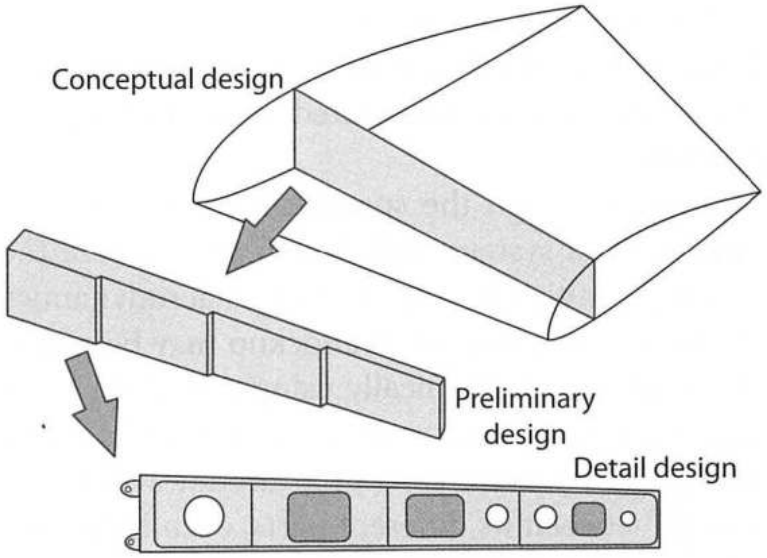

Raymer

Loads

- The aircraft will be subject to several types of loads during its mission:

Table 14.1 Aircraft Loads

Airloads	Landing	Other
Maneuver	Vertical load factor	Towing
Gust	Spin-up	Jacking
Control deflection	Spring-back	Pressurization
Component interaction	Crabbed	Bird strike
Buffet	One wheel	Actuation
Hailstones (3/4 in.)	Arrested	Crash
	Braking	Fuel pressure
Inertia loads	Takeoff	Powerplant
Acceleration	Catapult	Thrust
Rotation	Aborted	Torque
Dynamic		Gyroscopic
Vibration	Taxi	Vibration
Flutter	Bumps	Duct pressure
	Turning	Hammershock
		Prop/blade loss
		Seizure

Raymer

Loads

- Each component may be limited by a different load case

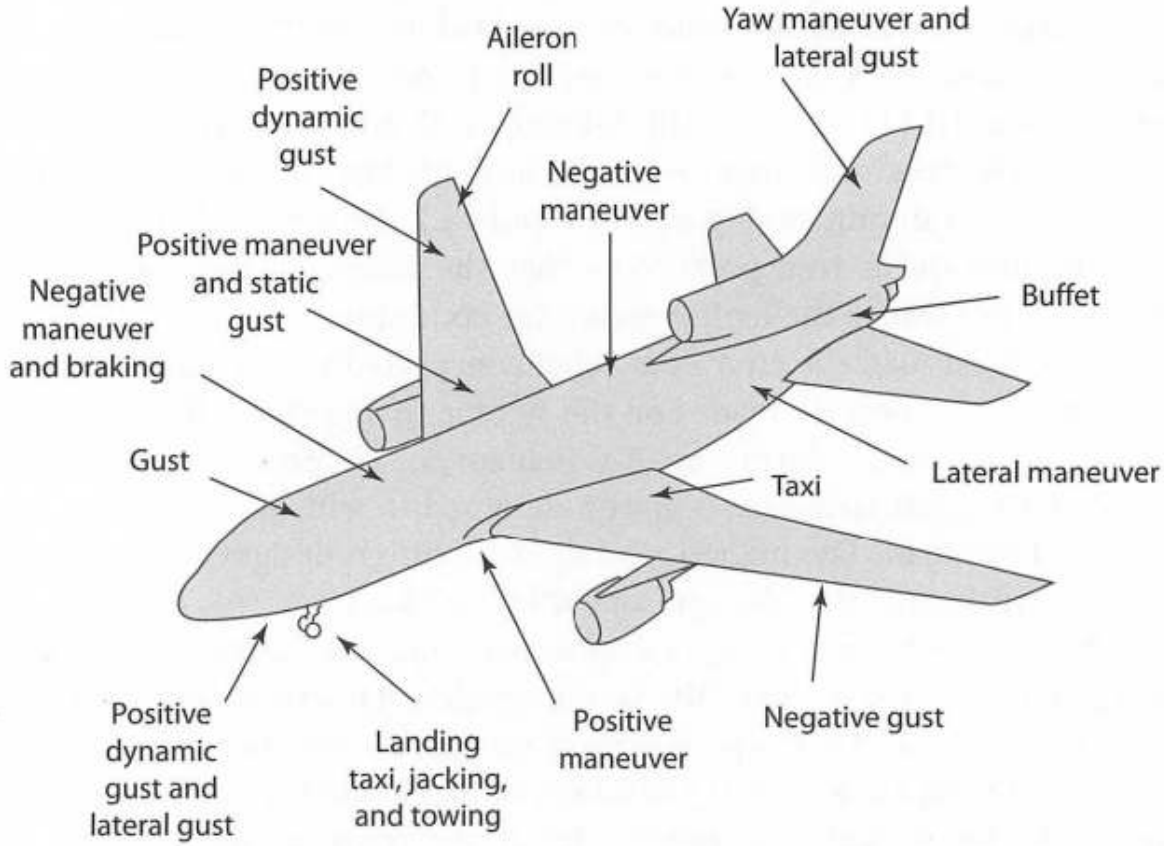

Fig. 14.2 L1011 critical loads.

Raymer

Load factor

- Ratio between applied load and the aircraft weight

$$n_z = \frac{Z}{W}$$

§ 25.337 Limit maneuvering load factors.

(a) Except where limited by maximum (static) lift coefficients, the airplane is assumed to be subjected to symmetrical maneuvers resulting in the limit maneuvering load factors prescribed in this section. Pitching velocities appropriate to the corresponding pull-up and steady turn maneuvers must be taken into account.

(b) The positive limit maneuvering load factor *n* for any speed up to *Vn* may not be less than 2.1 + 24,000/ (*W* + 10,000) except that *n* may not be less than 2.5 and need not be greater than 3.8 - where *W* is the design maximum takeoff weight.

(c) The negative limit maneuvering load factor -

(1) May not be less than −1.0 at speeds up to *V*C; and

(2) Must vary linearly with speed from the value at *V*C to zero at *V*D.

(d) Maneuvering load factors lower than those specified in this section may be used if the airplane has design features that make it impossible to exceed these values in flight.

[Doc. No. 5066, 29 FR 18291, Dec. 24, 1964, as amended by Amdt. 25-23, 35 FR 5672, Apr. 8, 1970]

https://www.law.cornell.edu/cfr/text/14/25.337

We use the V-n diagram to determine the load factors that the structure should withstand

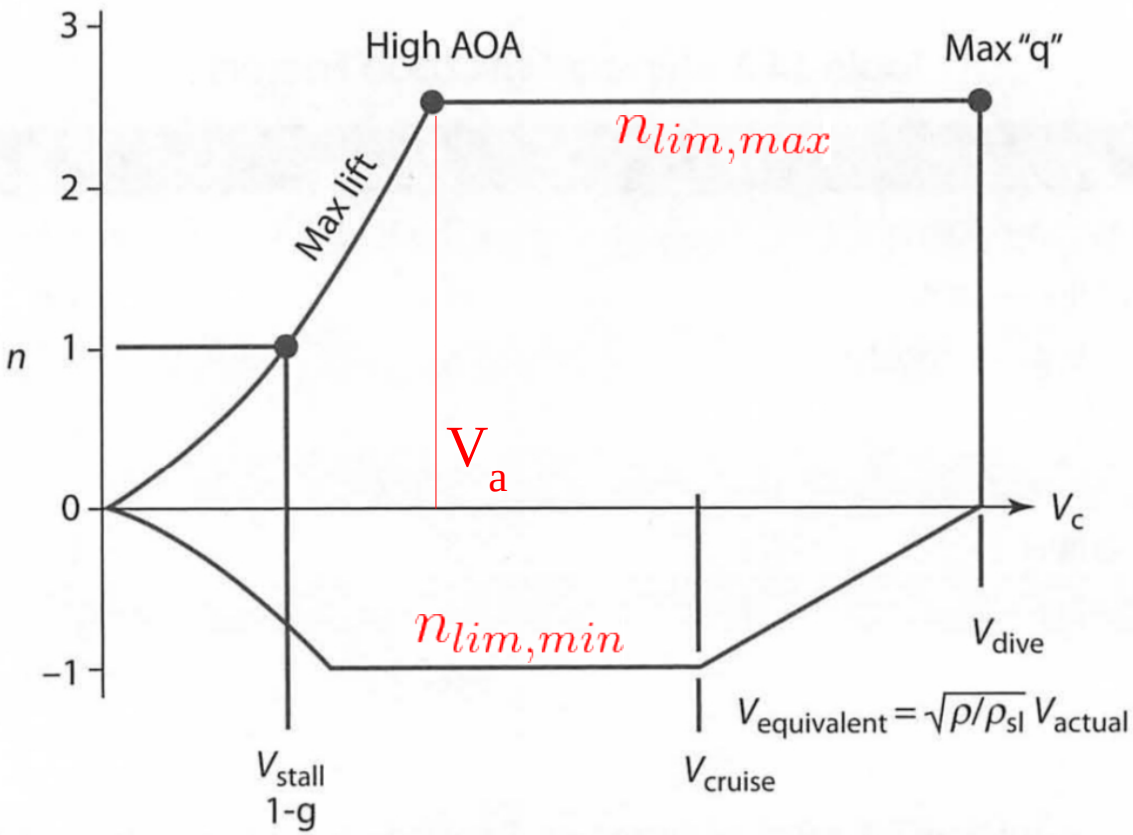

Limit load factor (FAR 25.337)

$$n_{lim,max} = 2.1 + \frac{24000}{W_0 + 10000}$$

lbs

$$2.5 \leq n_{lim,max} \leq 3.8$$

$$n_{lim,min} \leq -1.0$$

$$n_{ult} = n_{lim} \cdot SF$$

Safety factor (1.5)

- FAR 25.333 gives instructions to build the V-n diagram
- For subsonic aircraft, dive speed is 40%-50% greater than cruise speed
- For transonic aircraft, dive speed is about 15% higher than cruise speed
- For supersonic aircraft, dive Mach is 0.2 more than maximum Mach at level flight

Components appended to the wing may change the load distribution

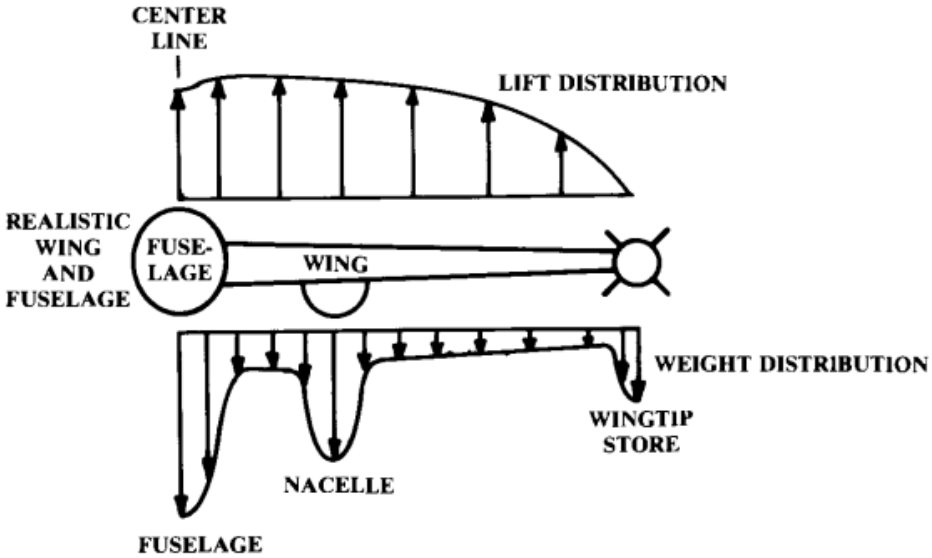

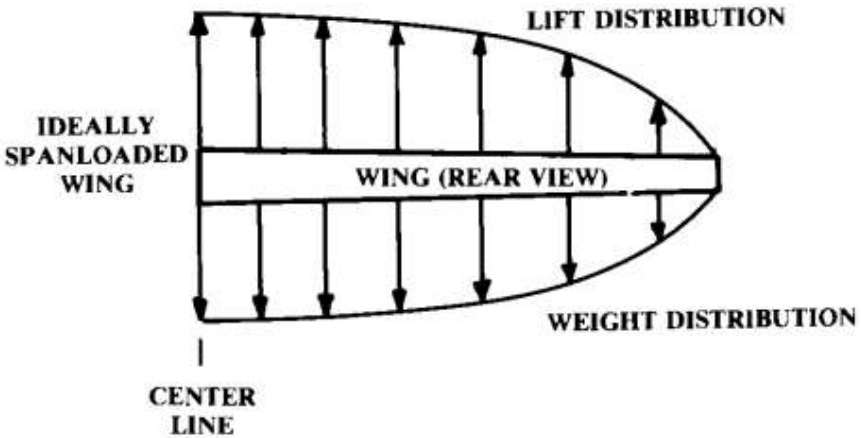

Engine and wingtip pods reduce root bending moment

Ideally we would distribute the weight of the aircraft along the wing to cancel loads (Flying wings)

Some important decisions regarding the aircraft structures should be taken during the conceptual design stage

Material selection

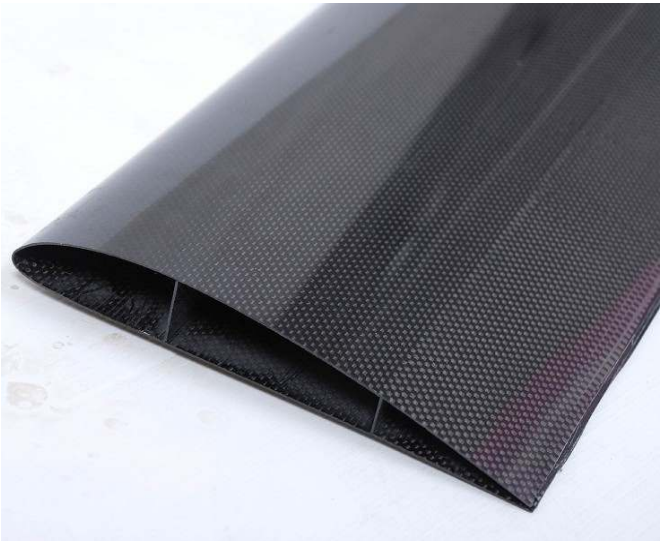

Structural layout

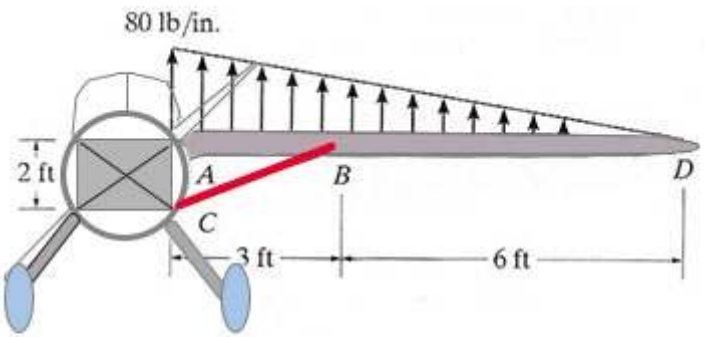

Load analysis

Deformation analysis

Preliminary design

Materials

- Wood
  - Cheap and light
  - Easy to fabricate and repair
  - Can be deteriorated by rot, bugs, and moisture
  - Properties can vary significantly

- Aluminum
  - Moderate cost and excellent strength/weight ratio
  - Relatively cheap and easy to fabricate
  - Resistant against chemical corrosion
  - May lose its strength at high temperatures

Materials

- Steel
  - Used where high strength and fatigue resistance is required
  - Cheap and easy to fabricate
  - Heavy

- Titanium
  - High strength/weight ratio
  - Supports high temperatures (leading edges and engines)
  - Expensive and difficult to fabricate

Materials

- Composites
  - Even higher strength/weight ratio
  - Aeroelastic tailoring
  - Difficult to repair
  - Does not support concentrated loads (needs metallic components to spread loads)

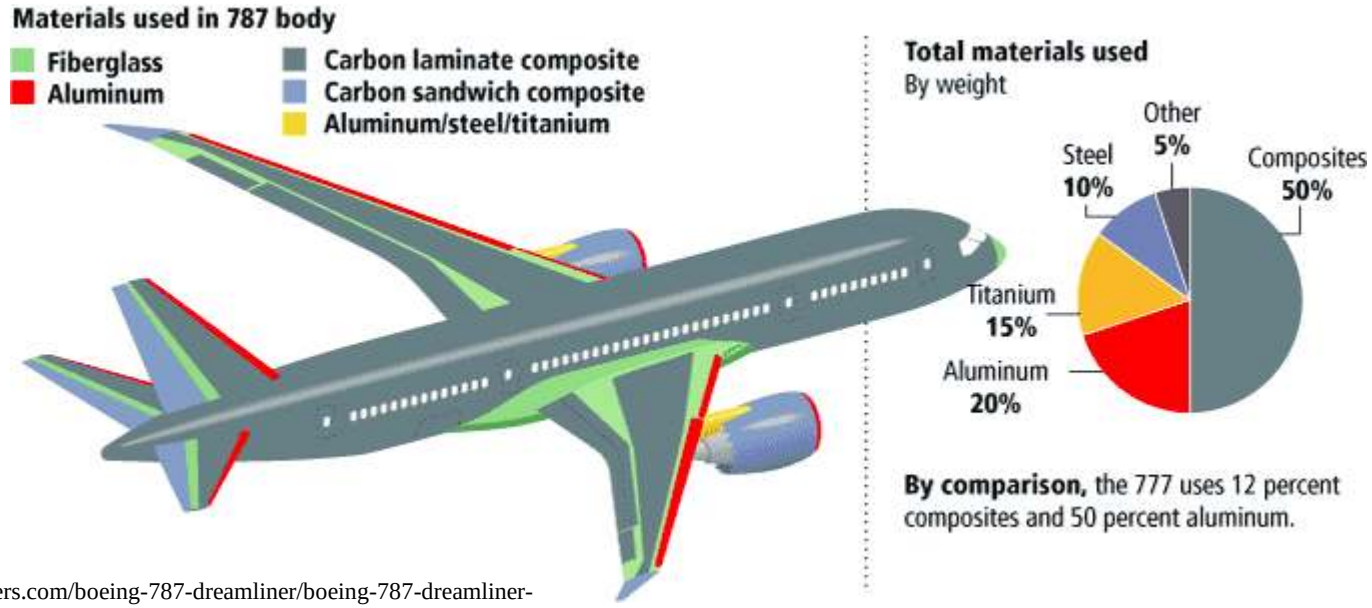

http://www.modernairliners.com/boeing-787-dreamliner/boeing-787-dreamliner-

The material selection should also consider manufacturing and maintainability aspects

Beechcraft Starship

- One of the first civillian aircraft that heavily employed composites in its structures

Structural layouts for wings

Raymer

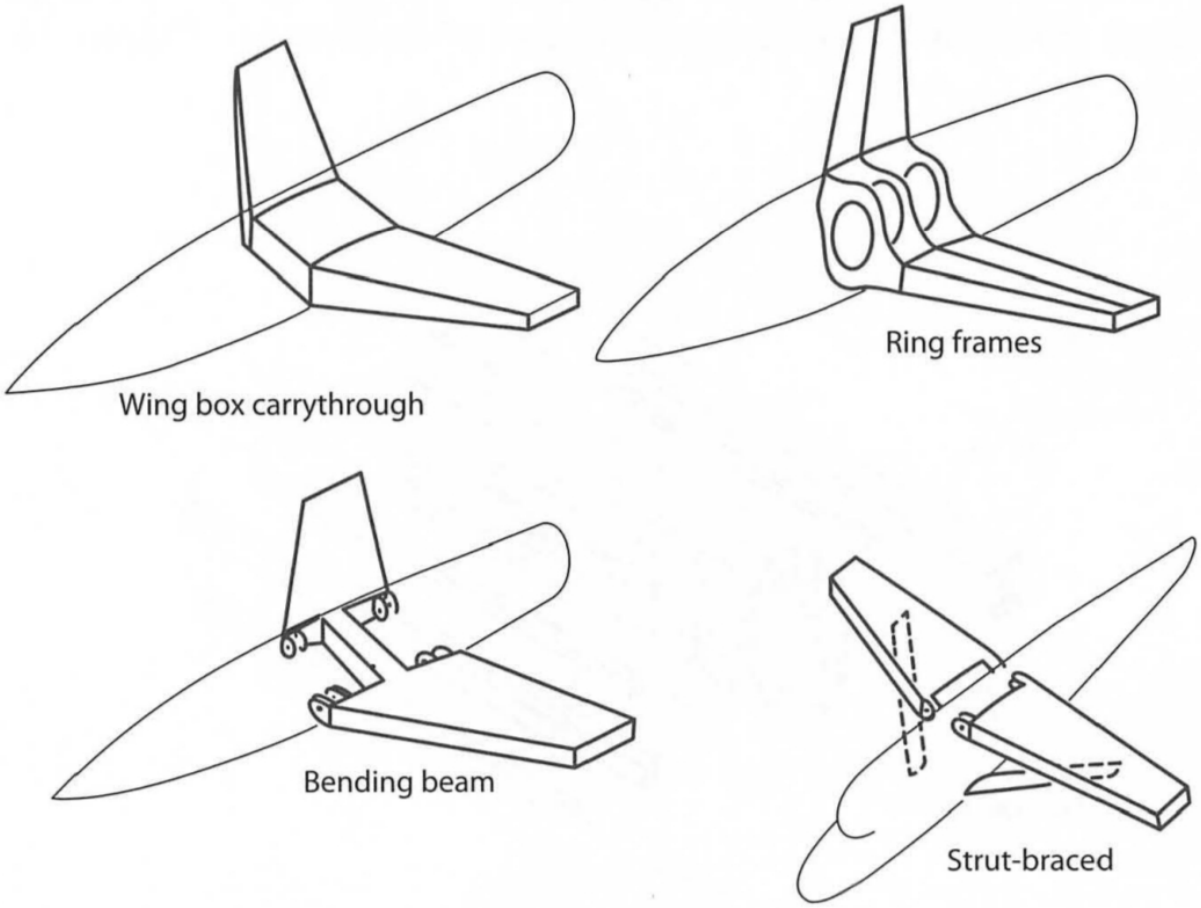

Wing box layout

Raymer

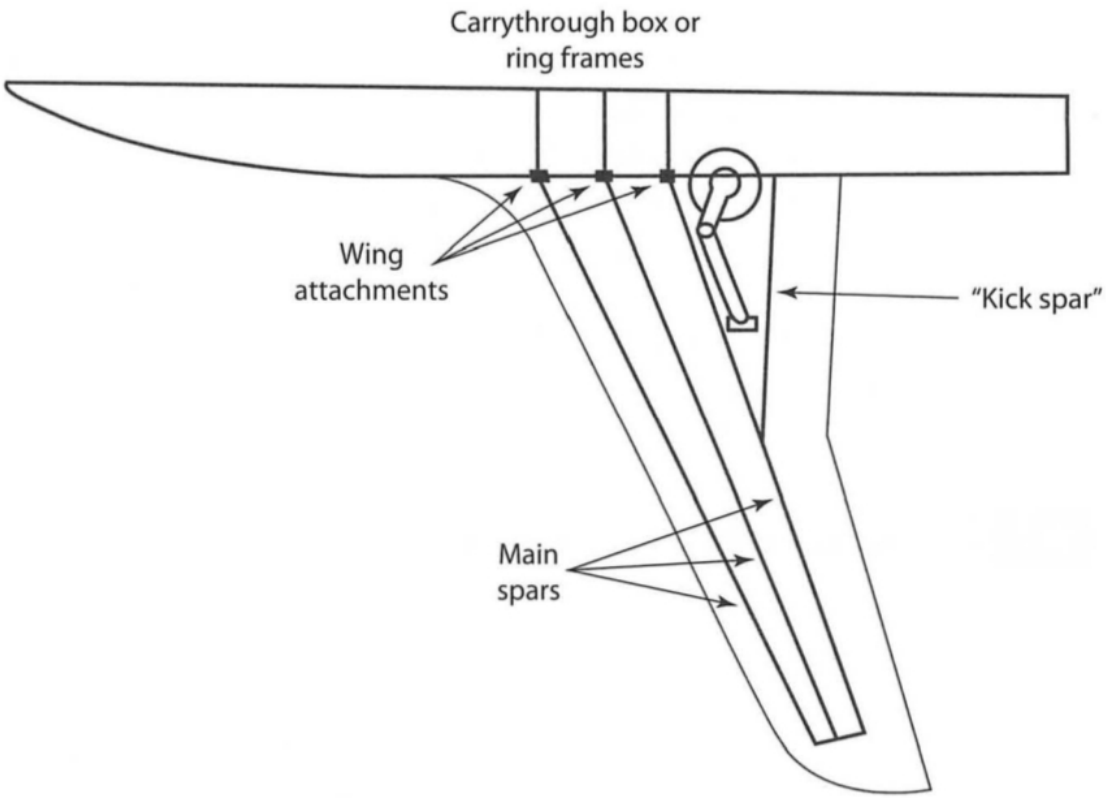

Fig. 8.13 Typical wing box structure.

B737-800

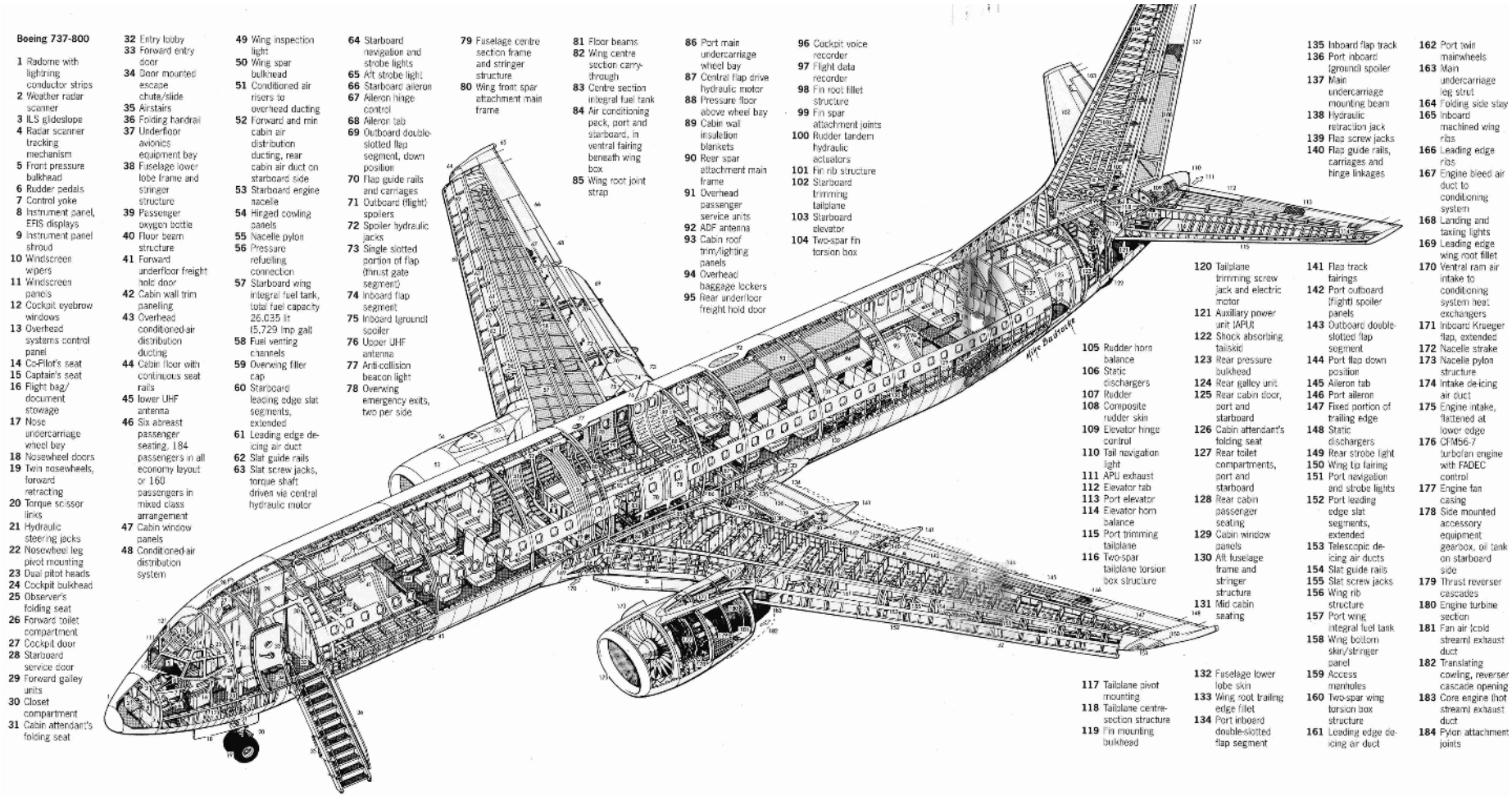

https://thelexicans.files.wordpress.com/2013/07/boeing737cutaway.gif

B737-800

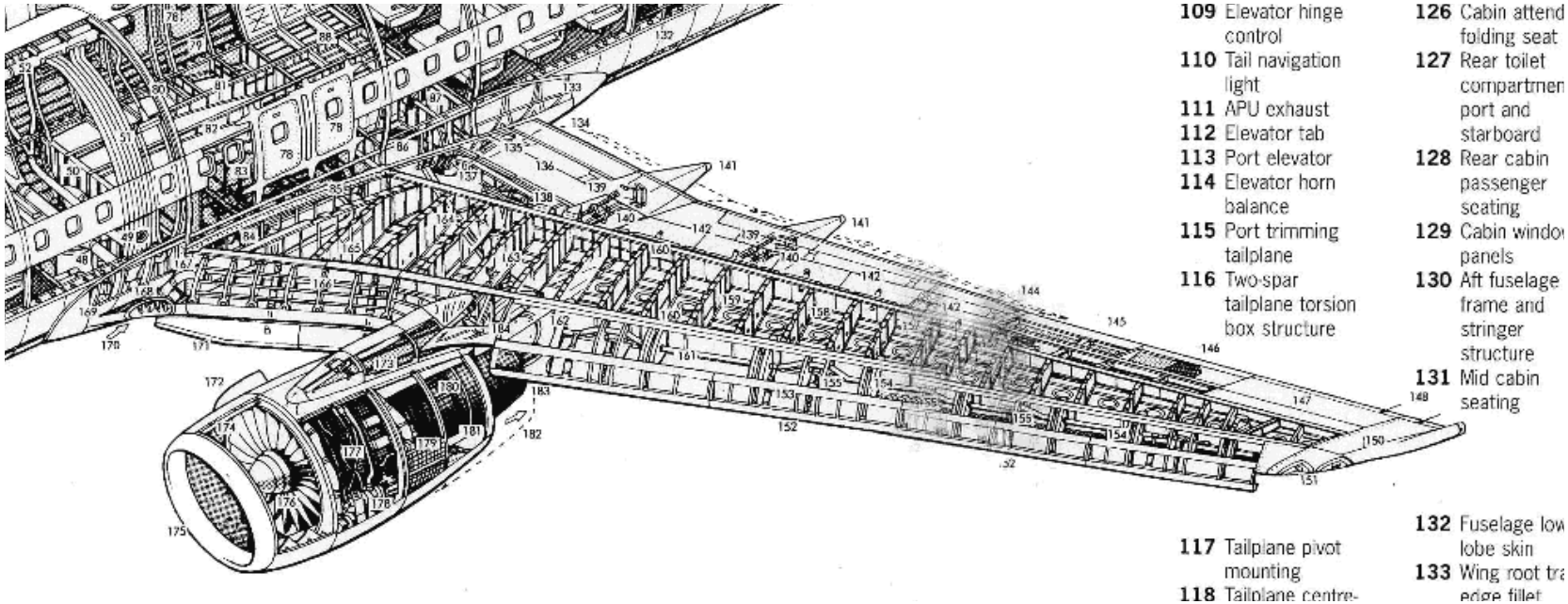

- Nervuras perpendiculares às longarinas são menores e têm melhor fixação
- É importante designar fixação do motor e do trem de pouso
- Flaps e ailerons fixados nas longarinas traseiras
- Slats fixados nas longarinas dianteiras

https://thelexicans.files.wordpress.com/2013/07/boeing737cutaway.gif

F-16

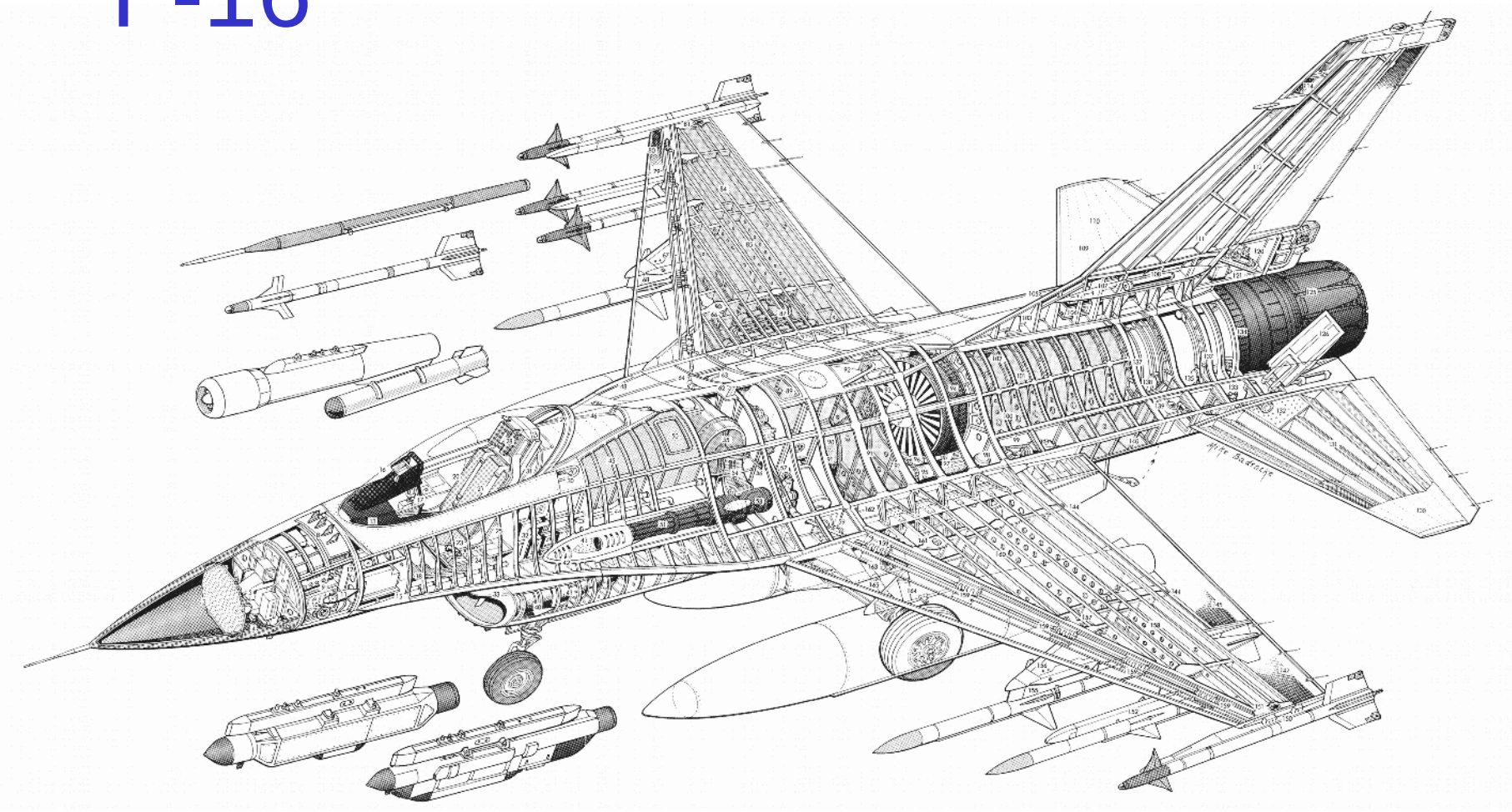

- Lower drag
- Heavier

https://conceptbunny.com/wp-content/uploads/2018/05/F-16.gif

F-16

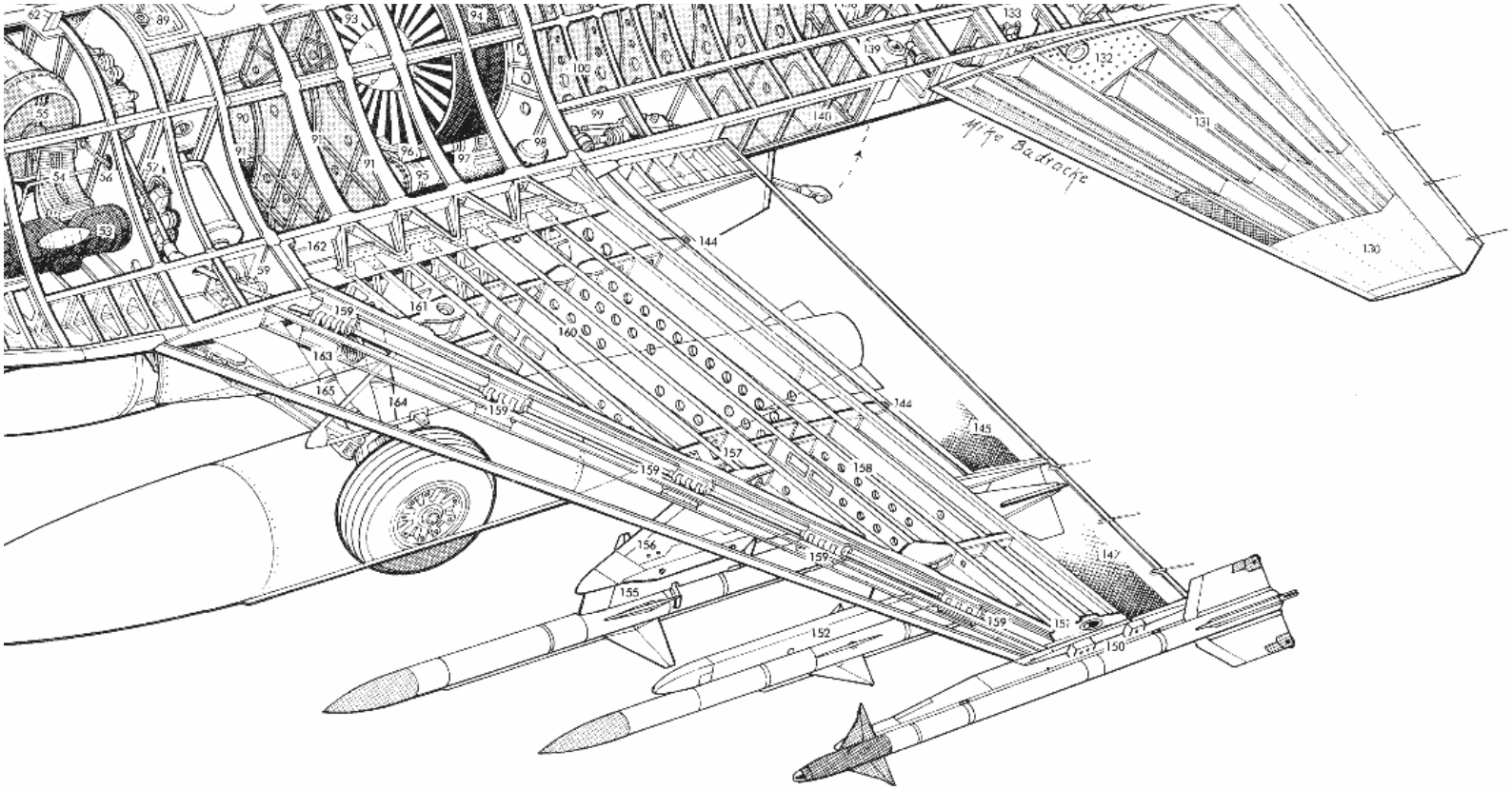

https://conceptbunny.com/wp-content/uploads/2018/05/F-16.gif

Structural layouts for fuselages

Nicolai

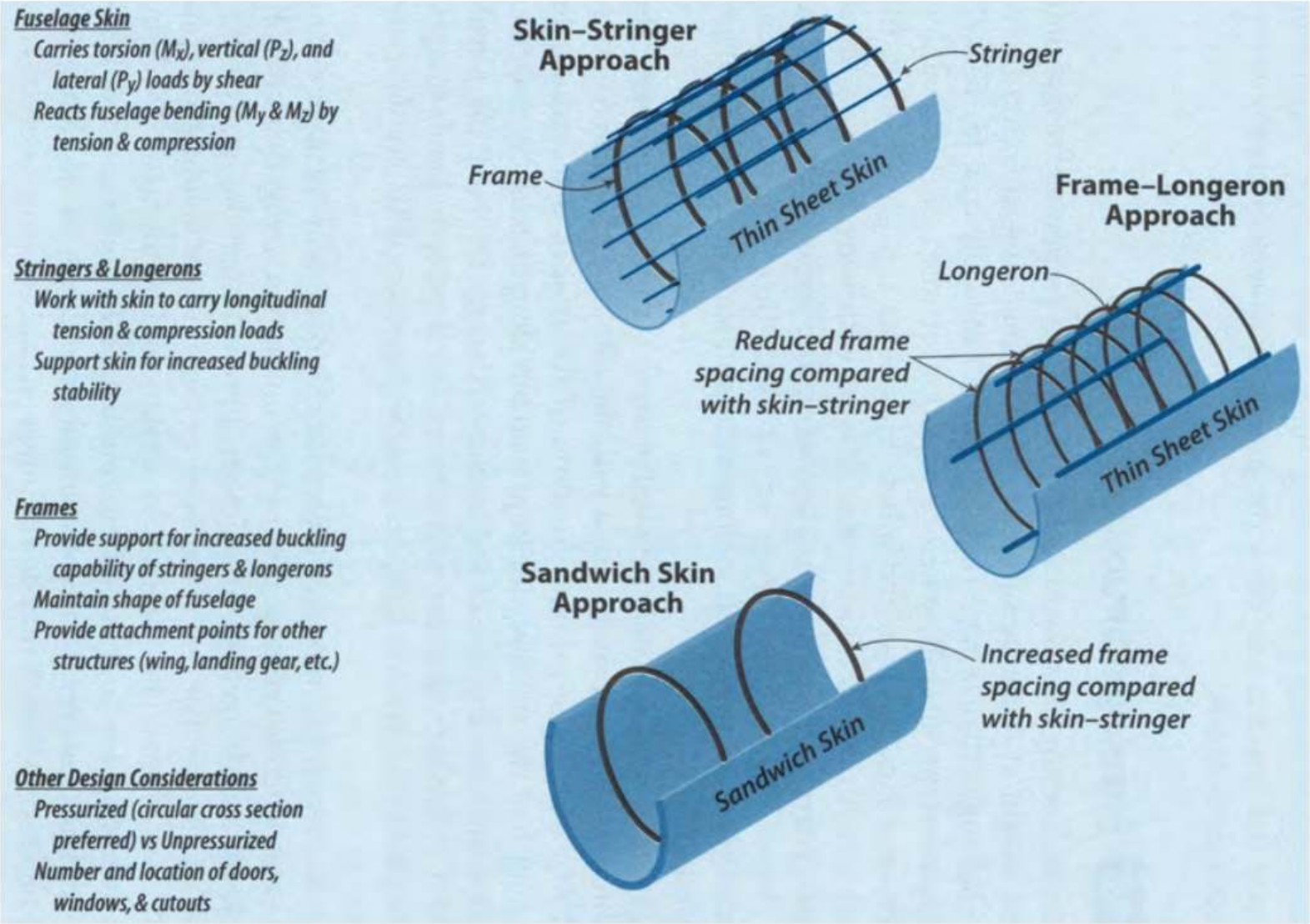

Fuselage frames are usually spaced 20 inches apart (Roskam)

Structural layout (Fuselage)

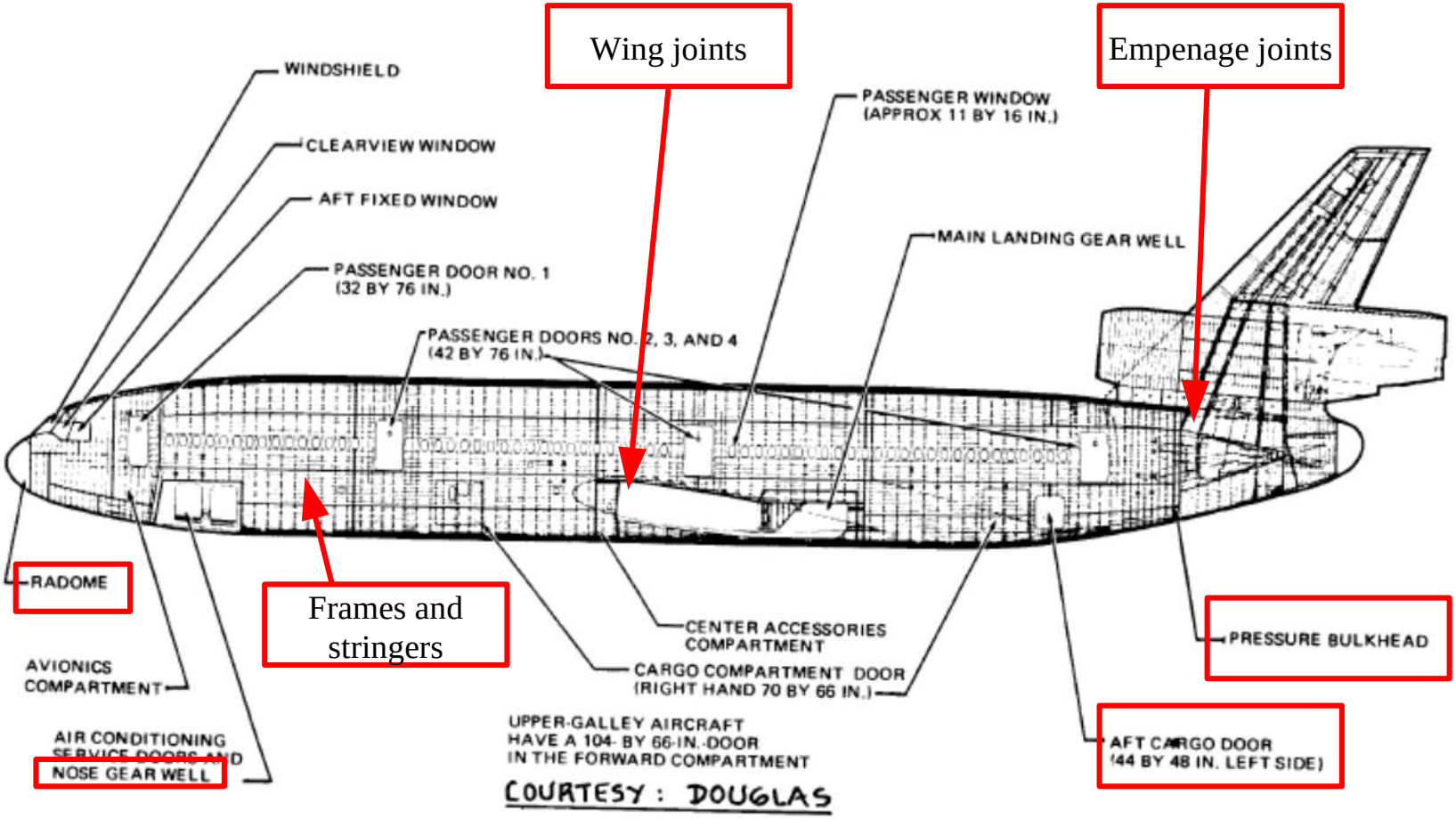

Figure 3.60 Fuselage Structural Arrangement for the McDonnell Douglas DC10

Structural Layout (Wing)

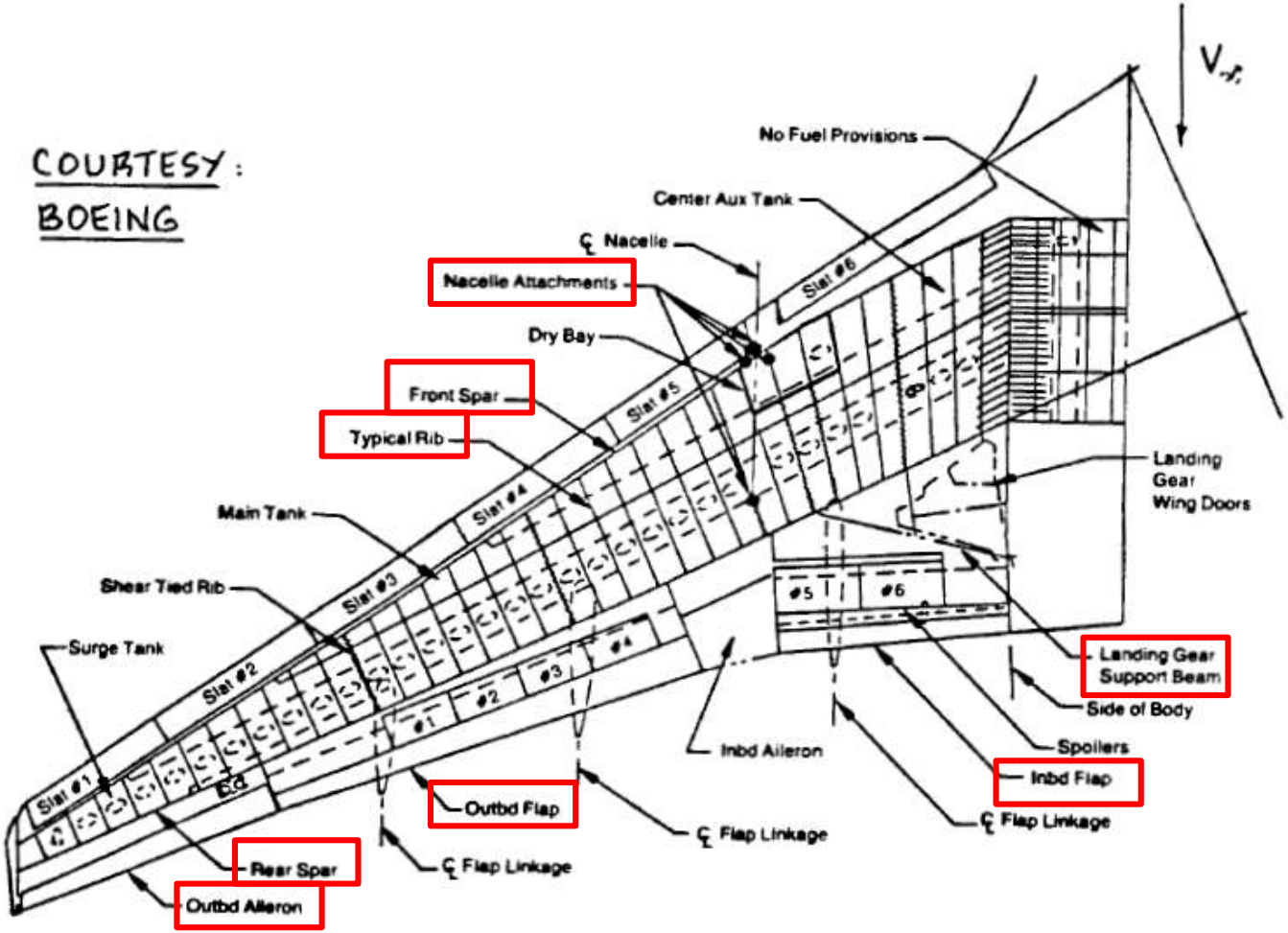

Figure 4.55 Wing Structural Arrangement Boeing 767

Structural Layout (Tails)

Vertical tail

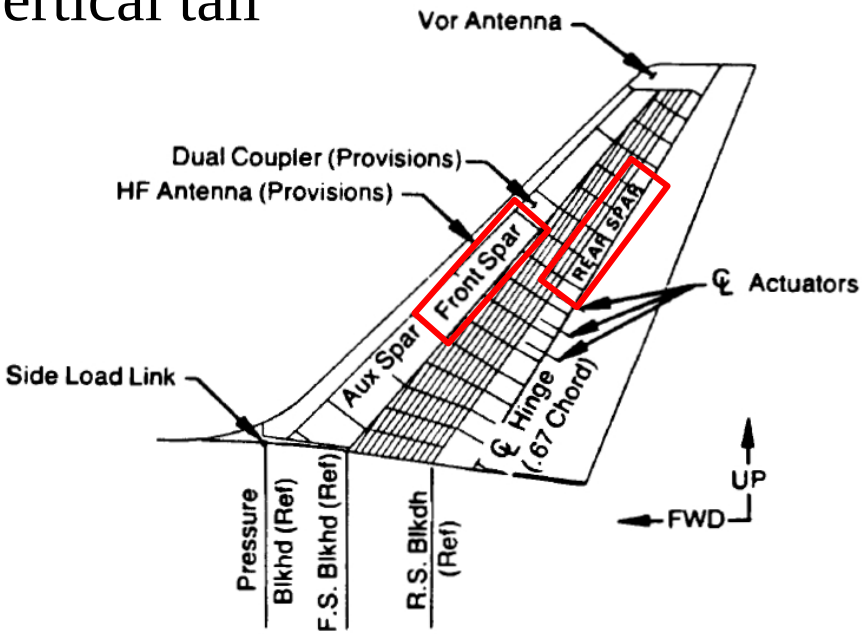

Horizontal tail

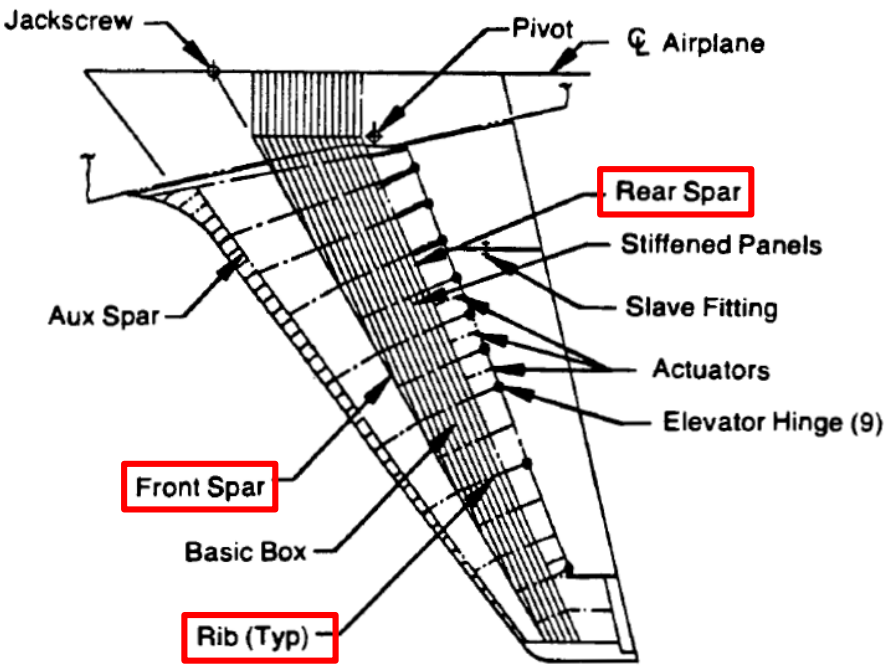

B767

Tarefa

- Seção 4.4 do roteiro até dia 14/09/2021
- Quiz até dia 14/09/2021 https://forms.gle/SWm2sf2cUQg8ixNo7
- Preparar relatório para o dia 29/09/2021. Enviar para ney@ita.br. Instruções no roteiro de programação.

WHAT HAVE WE SEEN SO FAR?

Analysis framework

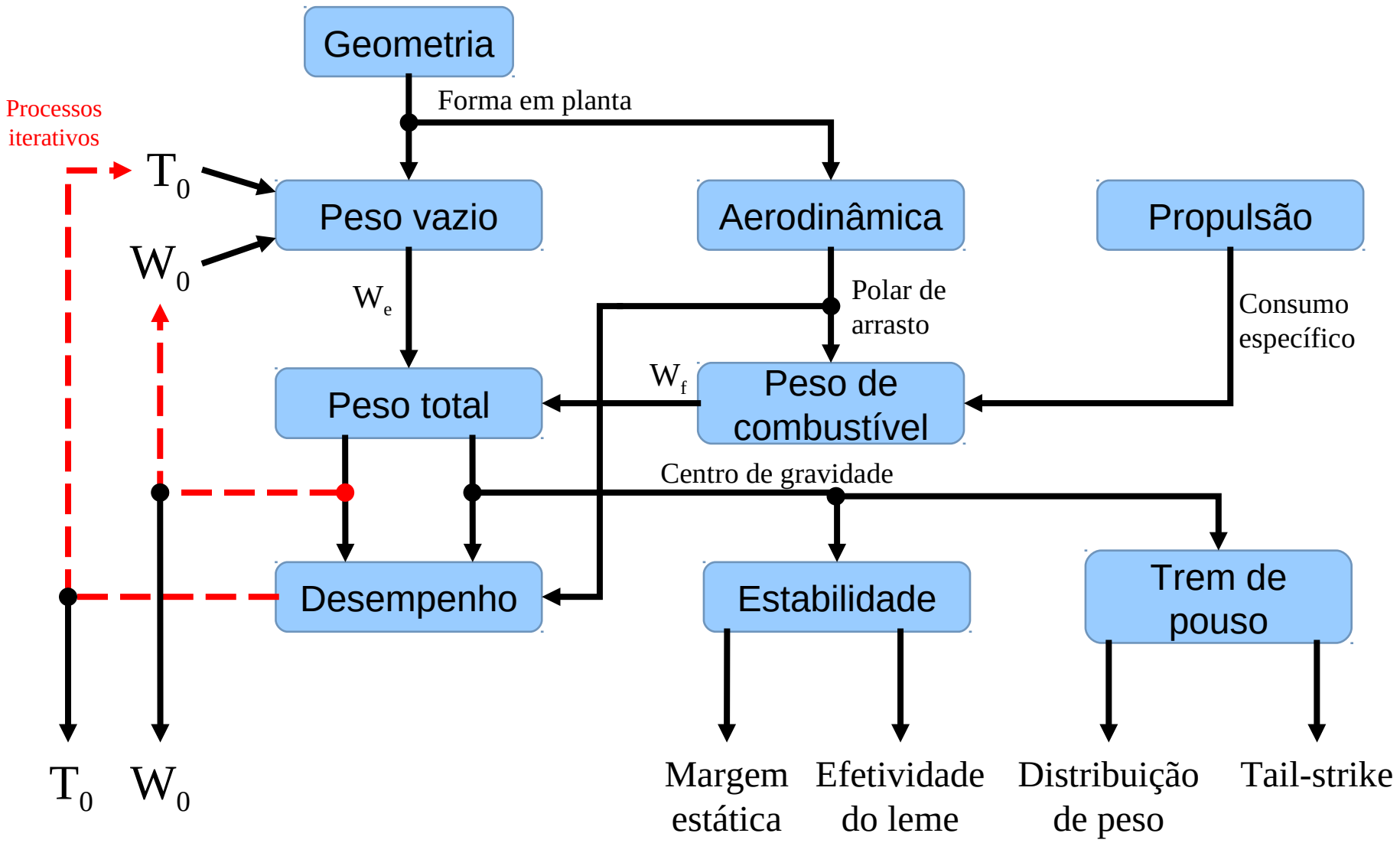

THANK YOU