Journal of Physics:
Conference Series

PURPOSE-LED
PUBLISHING™

PAPER • **OPEN ACCESS**

Low-Level Radio-Frequency system integrated with feed-forward control and vector modulation

To cite this article: C. C. Xiao *et al* 2024 *J. Phys.: Conf. Ser.* **2687** 022018

View the article online for updates and enhancements.

You may also like

- Digital prototype of LLRF system for SSRF
Zhao Yu-Bin, Yin Cheng-Ke, Zhang Tong-Xuan et al.
- An intra-pulse feedforward algorithm for improving pulsed microwave and beam stability
Jinfu Zhu, Hongli Ding, Jiawei Han et al.
- FPGA-based amplitude and phase detection in DLLRF
Liu Rong, Wang Zheng, Pan Wei-Min et al.

This content was downloaded from IP address 39.158.49.204 on 18/01/2026 at 05:01

Low-Level Radio-Frequency system integrated with feed-forward control and vector modulation

C. C. Xiao[1,2], W. C. Fang[1,2†], J.Q. Zhang[1,2], C. Wang[1,2], J. H. Tan[1,2]

[1] Shanghai Synchrotron Radiation Facility, Chinese Academy of Sciences, Shanghai, China
[2] Shanghai Advanced Research Institute, Chinese Academy of Sciences, Shanghai, China

† email address: fangwc@sari.ac.cn

Abstract. To provide a more accurate and stable Radio-Frequency (RF) signal in conditioning and processing test progress, it is necessary to design a Low-Level Radio-Frequency (LLRF) control system which can provide high precision RF driving signal based on meeting the amplitude and phase stabilization requirement. Through Feed-Forward operation, accurate phase adjustment and amplitude adjustment are realized inside the pulse, to realize the precision and automation of phase-inversion, amplitude stabilization, phase stabilization, and wave-form adaptation matching. An LLRF System integrated with feed-forward control and vector modulation output was designed and built, and the long-term working stability of the LLRF system was verified during a new 50MW S-band Klystron conditioning progress.

1. Introduction

A test stand based on a 50 MW Klystron, shown in Fig.1, was newly built on Hefei Advanced Light Source (HALS) campus. The construction of the S-band high power test stand includes the RF system, timing system, interlocking system, vacuum system, mechanical system, and radiation protection system, which can help to realize the start-up and operation of the S-band high power test stand [1]. Finally, the S-band high-power microwave source (Klystron) will be operated and tested on this platform for a long time to study the long-term operating performance of the product, provide user operation data, and provide user experimental proof for product performance upgrading.

In the test stand, the LLRF system should fulfill the function of generating stable and high precision RF sig-nal [2,3], and the whole LLRF system contains a Local Oscillator (LO) generator to provide 2830.5 MHz LO signal, a clock generator to provide 102 MHz clock signal, a 4-channel front-end down converter card to down-convert the pickup signals, and a digitizer card with Artix 7 FPGA on it.

2. Schematic design of s-band LLRF control system

The schematic of the LLRF control system is shown in Fig. 2 and the physical diagram is shown in Fig. 3. The LLRF control system has 4 AC coupled 16-bit ADC with a sampling rate of 125 MHz and 4 16-bit DAC with a sampling rate of 250 MHz. The upper control unit of the LLRF control is compiled based on LabVIEW.

Content from this work may be used under the terms of the Creative Commons Attribution 3.0 licence. Any further distribution of this work must maintain attribution to the author(s) and the title of the work, journal citation and DOI.
Published under licence by IOP Publishing Ltd

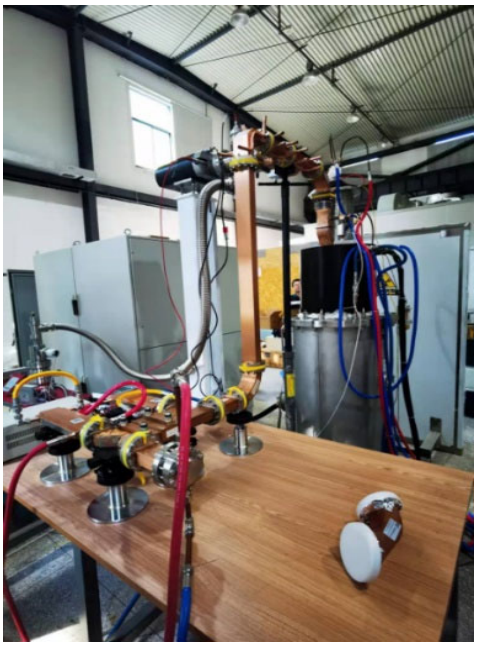

Figure 1. Whole view of the S band test stand

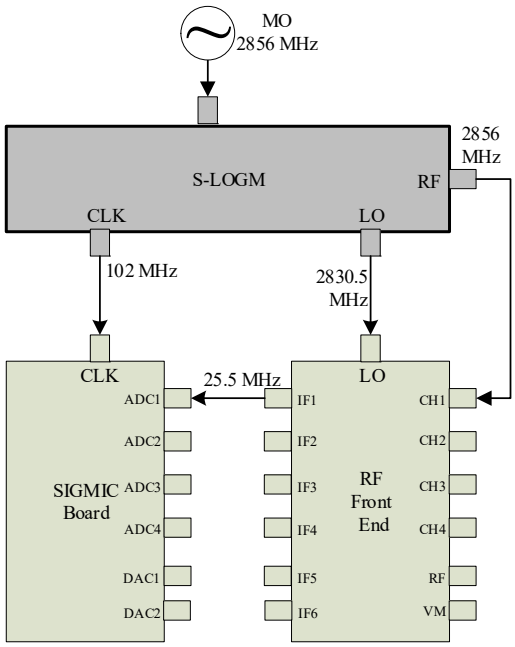

Figure 2. Schematic of the LLRF control system

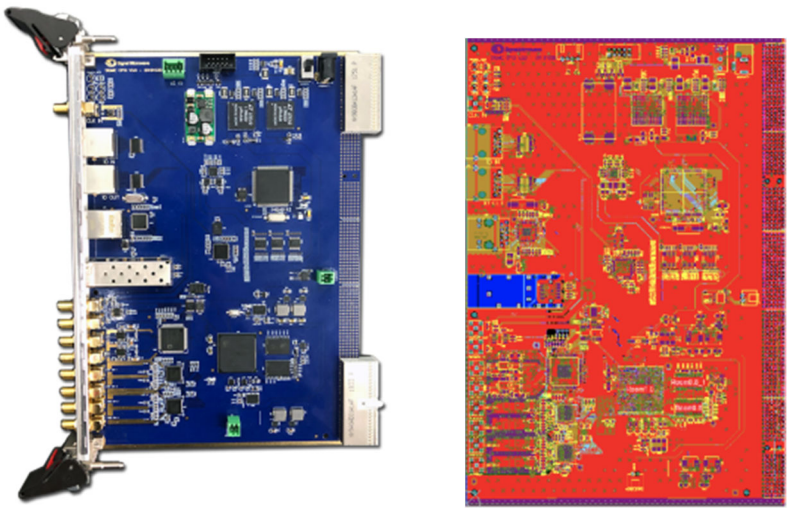

Figure 3. Physical diagram of LLRF control system

As shown in Fig. 4, the pick-up RF signals, like the through and reflect signals of the Klystron and the Solid-State Amplifier (SSA), can be down-converted to 25.5MHz IF signal, which is 1/4 the frequency of the FPGA Clock. After 4 times sampling, the raw data will go through IQ demodulation with I and Q, then transform into Amplitude and Phase by Coordinate Rotation Digital Computer (CORDIC) algorithm. Then, the amplitude and phase will be calibrated and go through the pulse-to-pulse feedback control, vector rotation for output correction, and Vector Modulation (VM) calibration for DC offset.

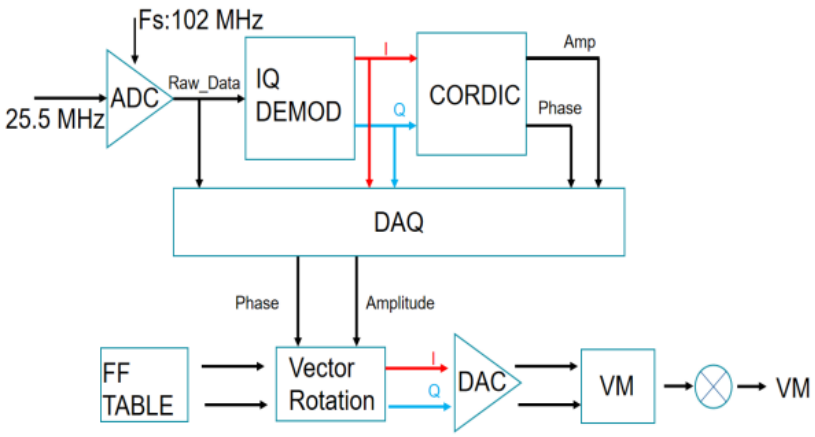

Figure 4. The Schematic of signal loop

3. Close-loop control design of S-band LLRF control system

When the precise mathematical model of the controlled object or the system parameters varies with time, PI control can be suitable for control [4]. The discrete form of the algorithm is in Eq. (1) is the control quantity provided by the current system, $e(t)$ is the error between the measured value and the set value, $\Sigma e(t)$is the arithmetic sum of all the errors in the past and is the two control parameters. The schematic of the control loop is shown in Fig. 5.

$$u(t) = k_p e(t) + k_i \Sigma e(t) \tag{1}$$

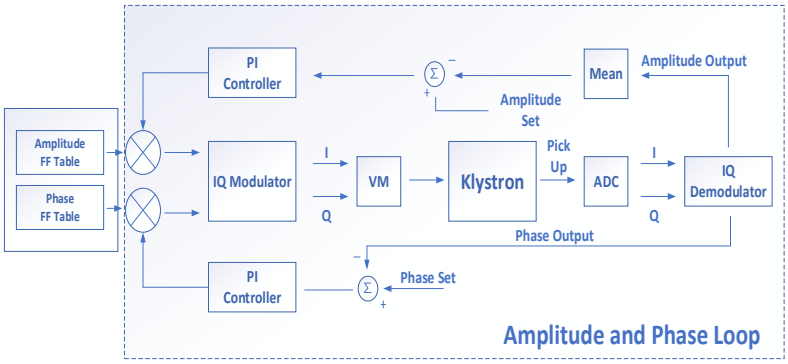

Figure 5. Schematic of control loop

In the LLRF system, there are two 512 ×16 bit registers called feed-forward (FF) table, which respectively describes the amplitude and phase of the LLRF pulse waveform. The LLRF system will obtain the amplitude and phase information of the current output pulse through sampling and data processing, calculate the deviation between the set value and them, then input the deviation into the amplitude and phase feedback closed loop to calculate the control quantity [5]. Finally, the LLRF would generate the pulse waveform in the feed-forward table after the control vector is rotated [6], which is described in Eq. (2), where I_o and P_o are the output of integration and proportion parameters separately, and the I_f and P_f are the offset parameters. The amplitude phase closed loop control embedded in the LLRF adopts the PI control algorithm, which can maintain a long-time stable status[7].

$$I_o = I + I_f$$
$$P_o = P + P_f \tag{2}$$

4. Measurement and S band klystron conditioning

The measurement and conditioning schematic are shown in Fig. 6. The VM output was split into two signals, one to drive the Solid-State Amplifier for conditioning and the other connected to one of the DAC channels for stability test.

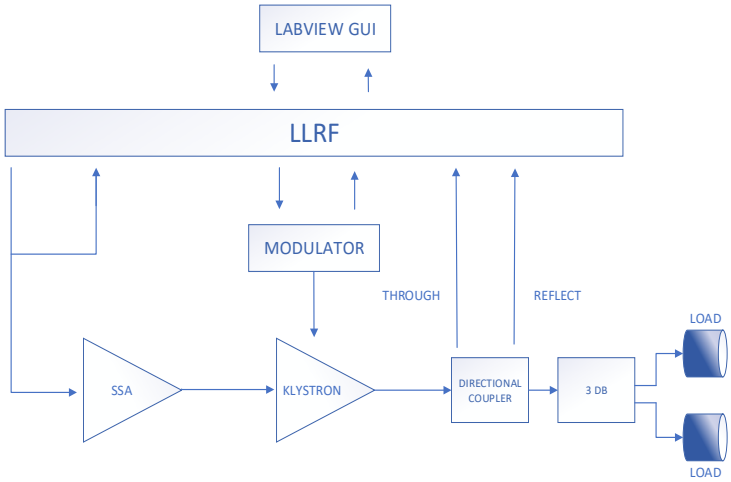

Figure 6. Whole layout of measurement

A 5-hour continuous test was conducted and 2 LLRF output pulses were recorded per second to characterize system stability using the average value of the pulses. As shown in Fig.7(a) and Fig.7(b), during the long-time stability test, the RMS stability of Amplitude and Phase was 0.03% and 0.03 degree respectively under open loop status. In the closed-loop working state, the drift of amplitude and phase caused by temperature changes and vibrations during the long-term operation had been removed in Fig.7(c) and Fig.7(d).

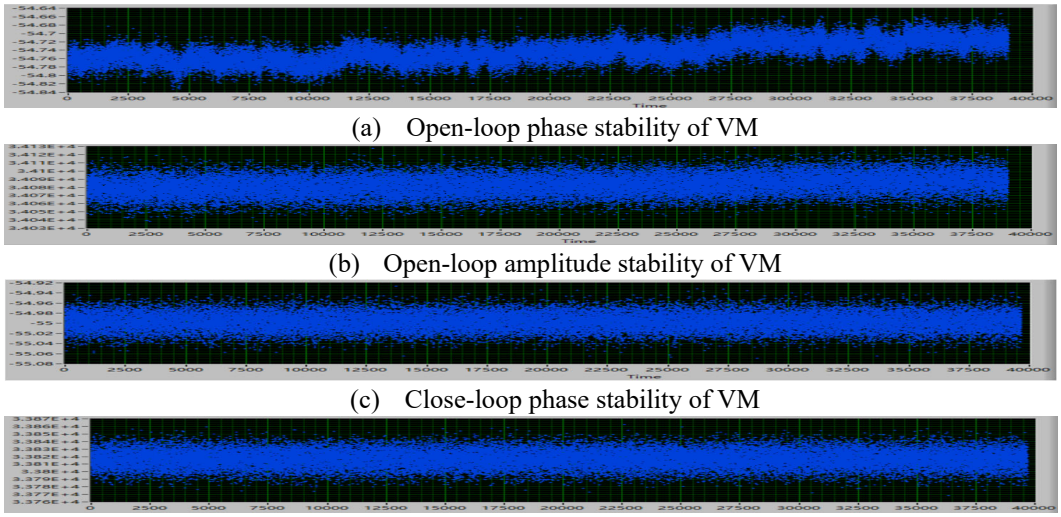

(a) Open-loop phase stability of VM

(b) Open-loop amplitude stability of VM

(c) Close-loop phase stability of VM

(d) Close-loop amplitude stability of VM

Figure 7. Measurement of the LLRF system

The conditioning process for the S-band high-power Klystron must follow the principle that when a breakdown or Vacuum break happens, the beam voltage for the modulator has to be decreased (Fig. 8) to protect the Klystron from damage [8].

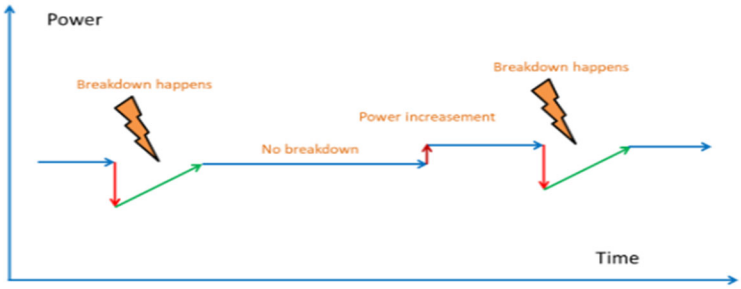

Figure 8. The process of conditioning

After 4 weeks' s conditioning process, the microwave output power of the S-band Klystron had reached 51 MW with 2.5 us pulse width and 5 Hz repetition rate under the beam voltage of 320 kV.

5. Conclusion

A 4-channel LLRF system with feed-forward control and vector modulation has been designed, fabricated, and tested in HALS. The results demonstrate that the LLRF system has high stability both in amplitude and phase. The close-loop control has been proven to compensate the drift of amplitude and phase caused by temperature changes and vibrations. Further studies should be conducted to add more channels and adopt higher sampling frequency to the LLRF system.

6. Acknowledgements

Work supported the National Natural Science Foundation of China (No. 12105345), National Natural Science Foundation of China (No. 11975298) and the Alliance of International Science Organizations (ANSO-CR-KP-2020-16).

7. References

[1] Cheng-Cheng Xiao, et al., "Design and preliminary test of the LLRF in C band high-gradient test facility for SXFEL", Nucl. Sci. Tech. 31 (2020) 100,
doi: http://dx.doi.org/10.1007/s41365-020-00806-6.

[2] Xu Y, Zhang J, Xiao C, et al. "Design and verification of adaptive control to generate flat-top radio frequency power output of pulse compressor for SXFEL", Nuclear Instruments and Methods in Physics Research, Section A. Accelerators, Spec-trometers, Detectors and Associated Equipment, 2022(1031-):1031.

[3] Z.Q. Geng, "Beam-based optimization of SwissFEL low-level RF system", Nucl. Sci. Tech. 29, 128 (2018). doi: https://doi.org/10.1007/s41365-018-0460-7

[4] W. Jalmuzna, W. Cichalewski et al. "Status of LLRF and Resonance Control Dedicated Algorithms Extension for PolFEL", in Proc. IPAC' 22, Bangkok, Thailand, June 2022, pp. 880-883. doi: 10.18429/JACoW-IPAC2022-TUPOST016

[5] J. Belleman, "From analog to digital", Proceedings of CAS -CERN Accelerator School: Digital Signal Processing, pp.131-165, doi:10.5170/CERN-2008-003.131

[6] D. Valuch, R. Alemany-Fernandez, et al. "Digital Low-Level RF System For The CERN Linac3 Accelerator", in Proc. IPAC' 22, Bangkok, Thailand, June 2022, pp. 880-883. doi:10.18429/JACoW-IPAC2022-TUPOST008

[7] J. Q. Zhang, L. Li, Y. Liu, et al. "A precision LLRF control system for UED", Nuclear Instruments and Methods in Physics Research Section A Accelerators Spectrometers Detectors and Associated Equipment, 2021, 1012(7):165587.
doi:10.1016/j.nima.2021.165587

[8] B. Woolley," High power X-band RF test stand develop-ment and high power testing of the CLIC crab cavity", Lancaster University, 2015. 173 p