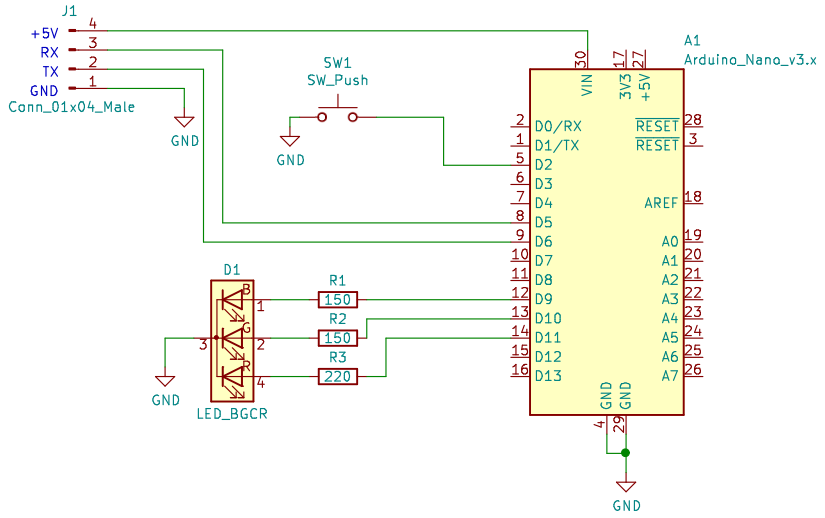

ALDIS – Main Schematic

Createtd for UKErevyen 2021

FK – Øyvind Skaaden

Sheet: /

File: ALDIS.sch

Title: ALDIS

Size: A4	Date: 2021-11-29	**Rev: 1**
KiCad E.D.A. kicad 5.1.10-88a1d61d5888ubuntu20.10.1		Id: 1/1