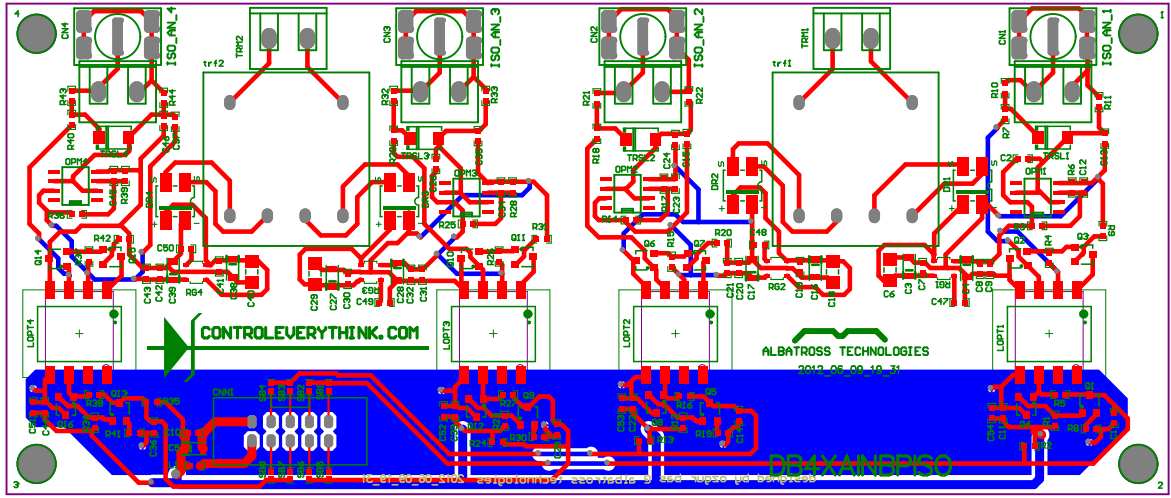
CONTROLEVERYTHINK.COM
ALBATROSS TECHNOLOGIES
2012-05-09-19-31
DB4XAMPISO
ISO_AN_1
ISO_AN_2
ISO_AN_3
ISO_AN_4

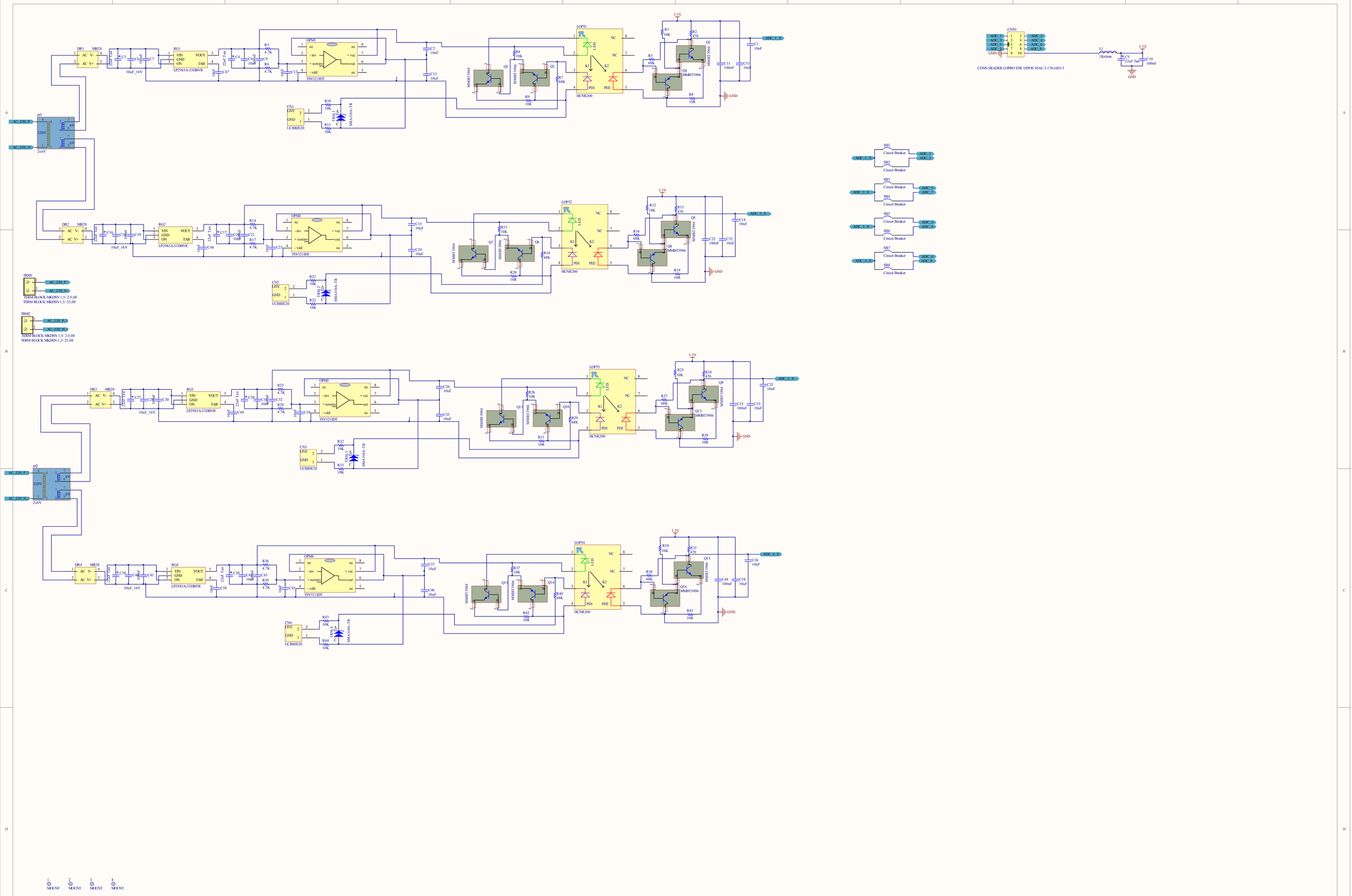

Title		
Size A1	Number	Revision
Date: 7/30/2018	Sheet of	
File: C:\ws_alt_09\...\an_io.SchDoc	Drawn By:	