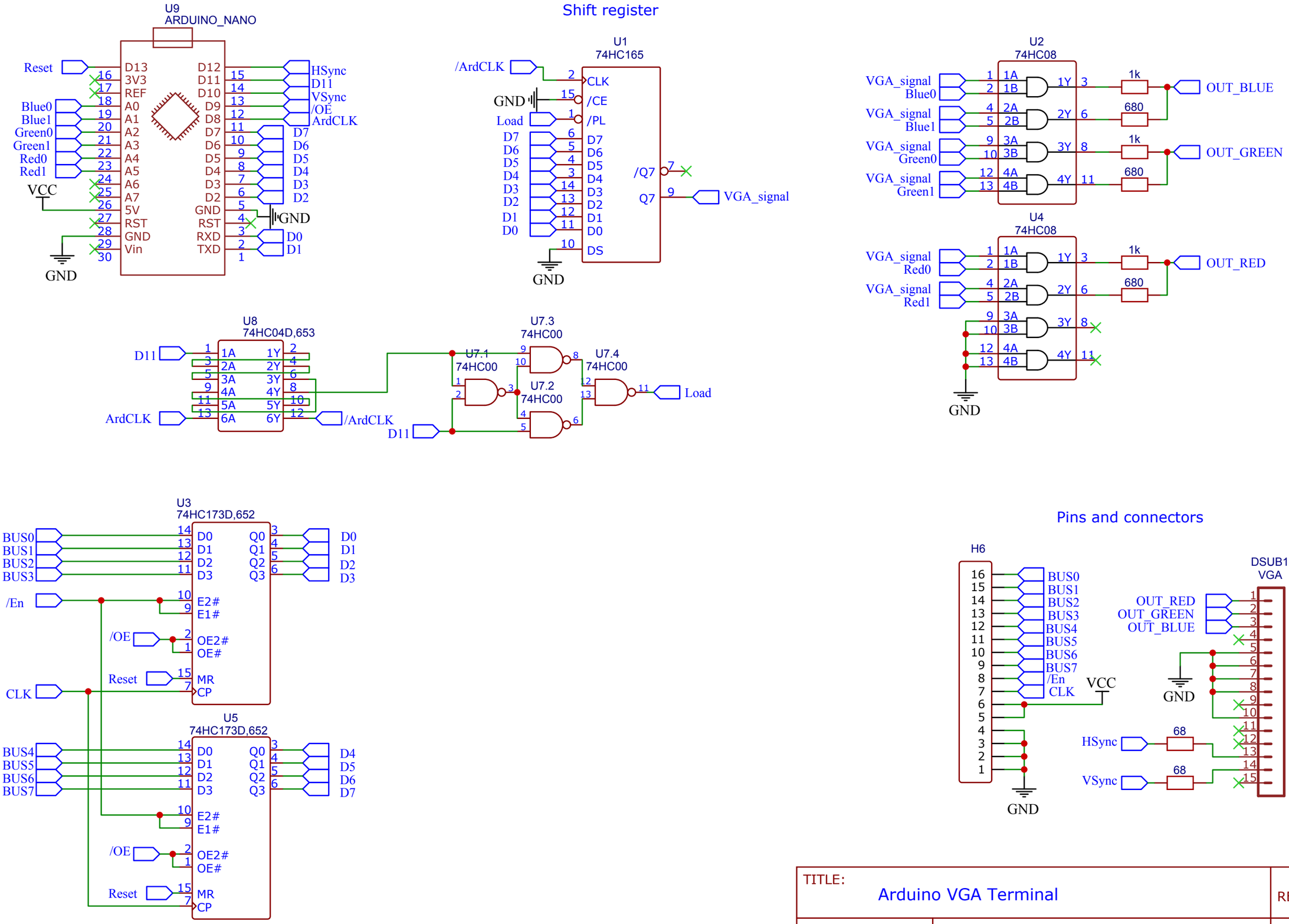

TITLE: Arduino VGA Terminal	REV: 1.0
Company:	Sheet: 1/1
Date: 2021-02-25 Drawn By: P Rivero	