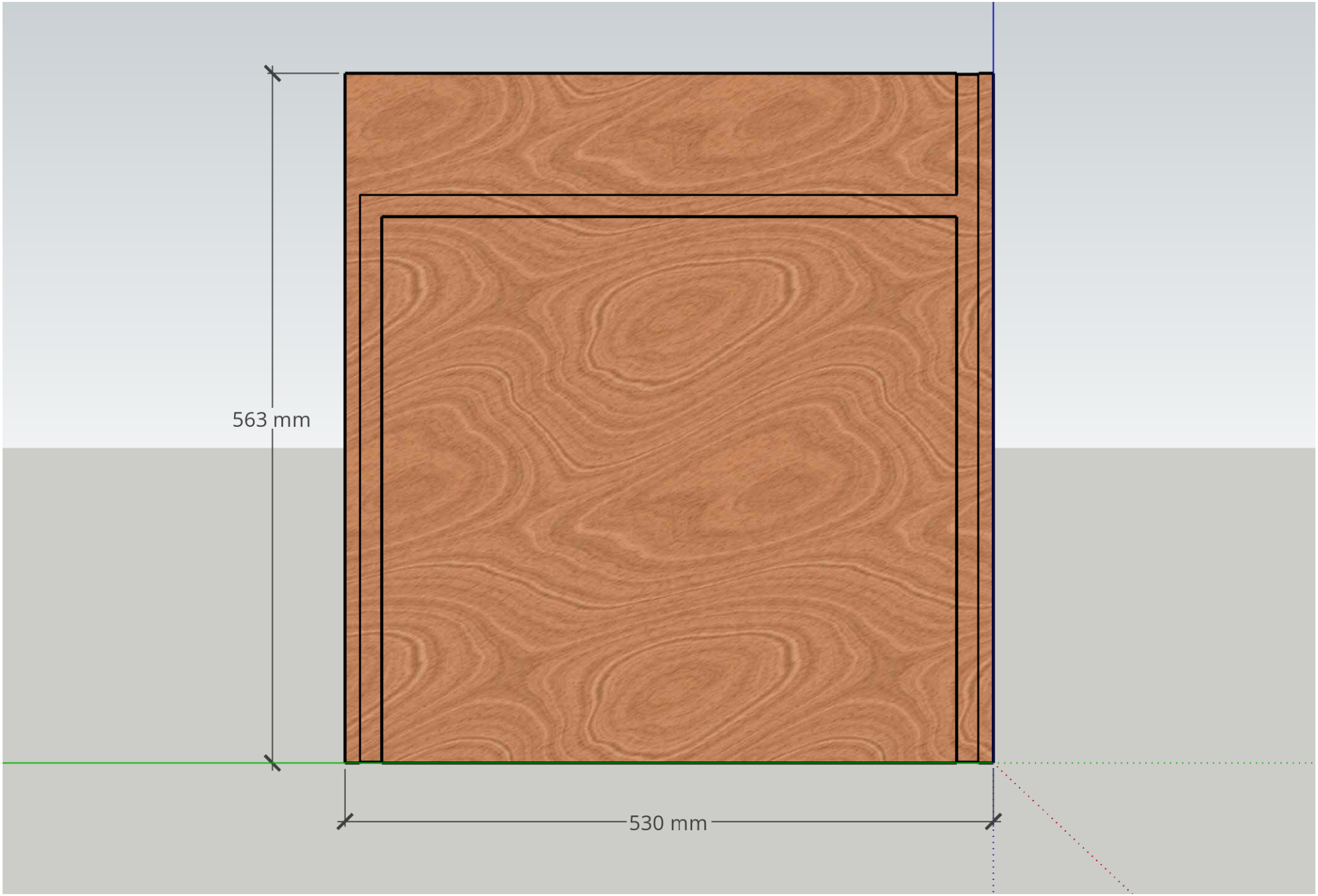
563 mm
530 mm

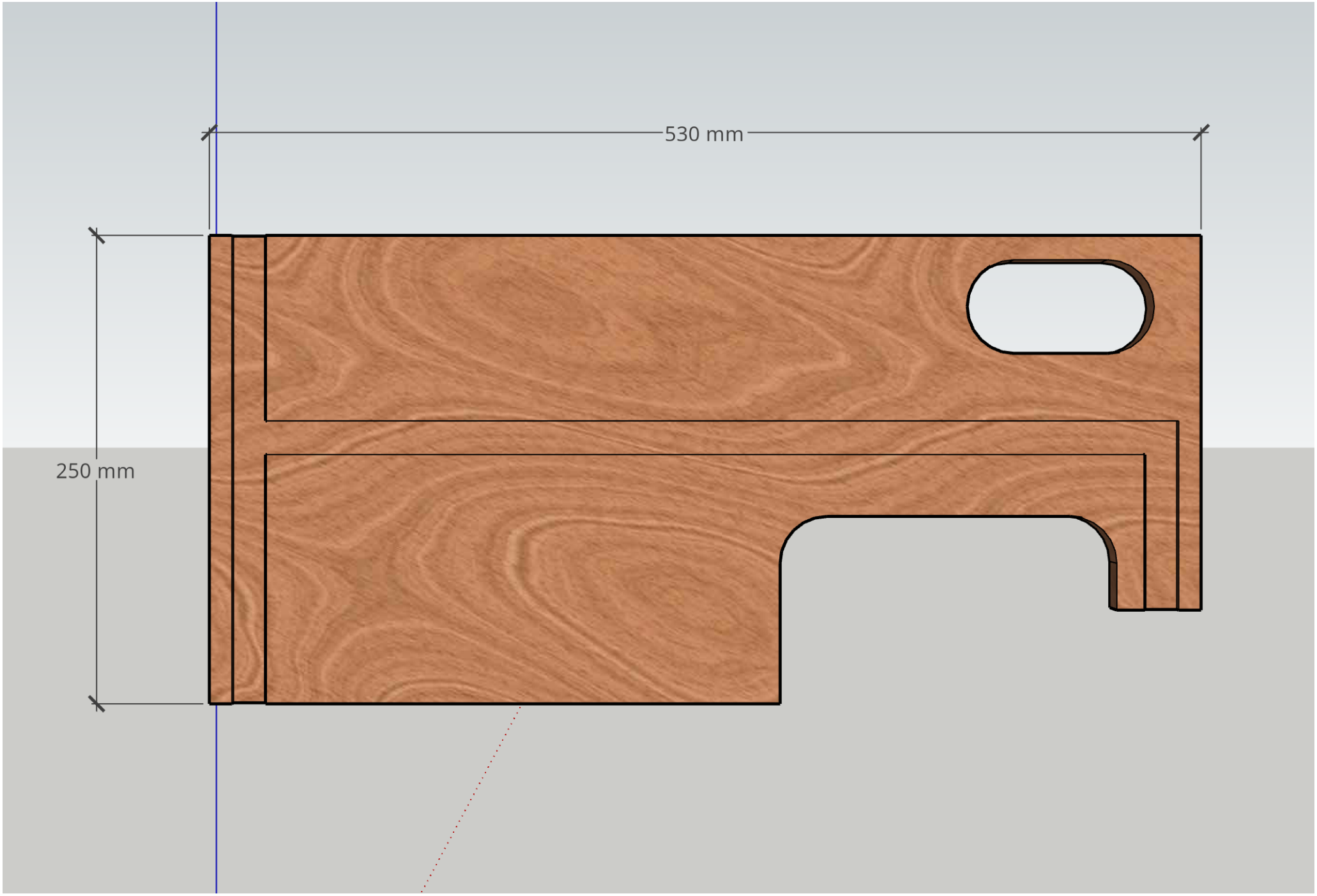
530 mm
250 mm

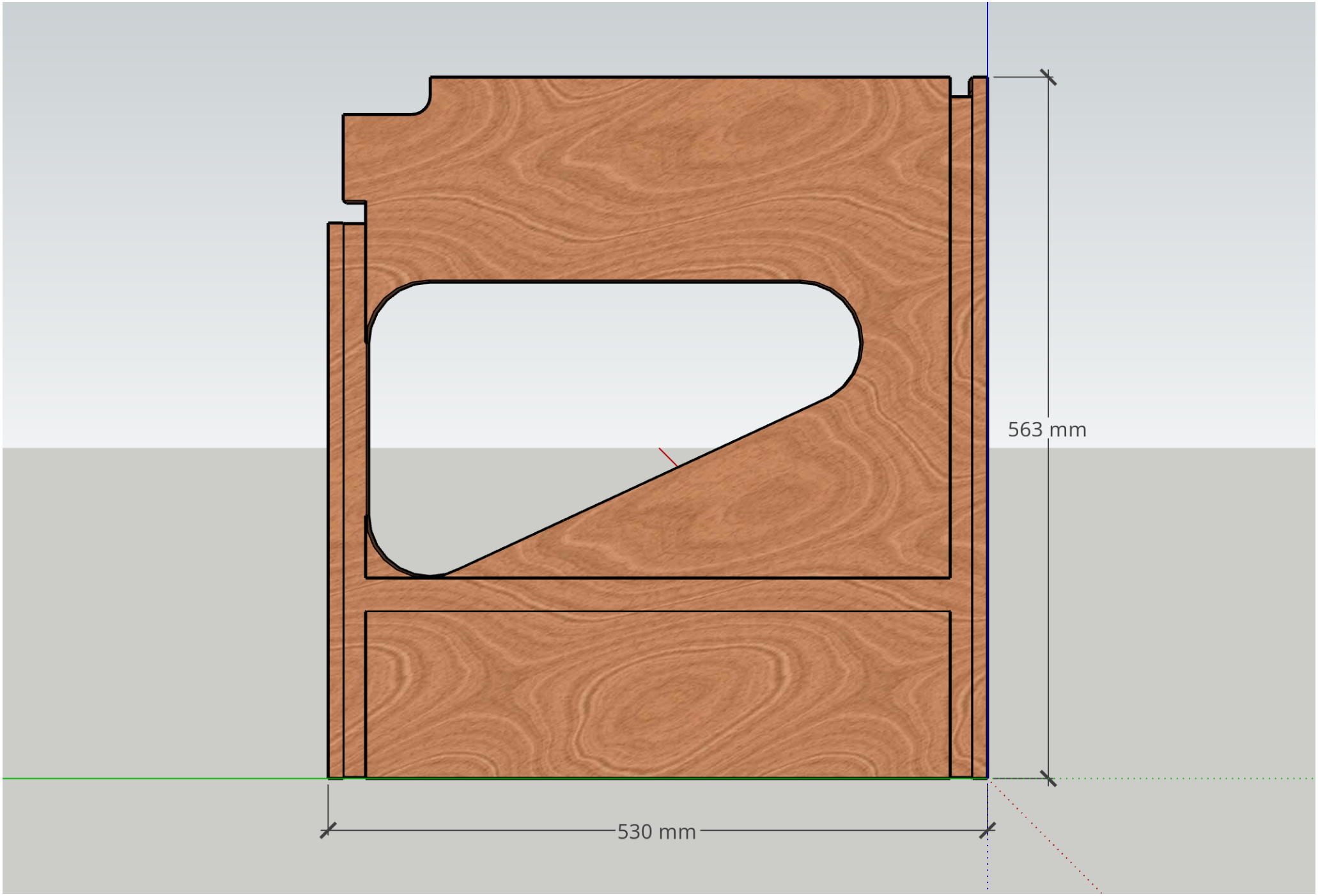
563 mm
530 mm

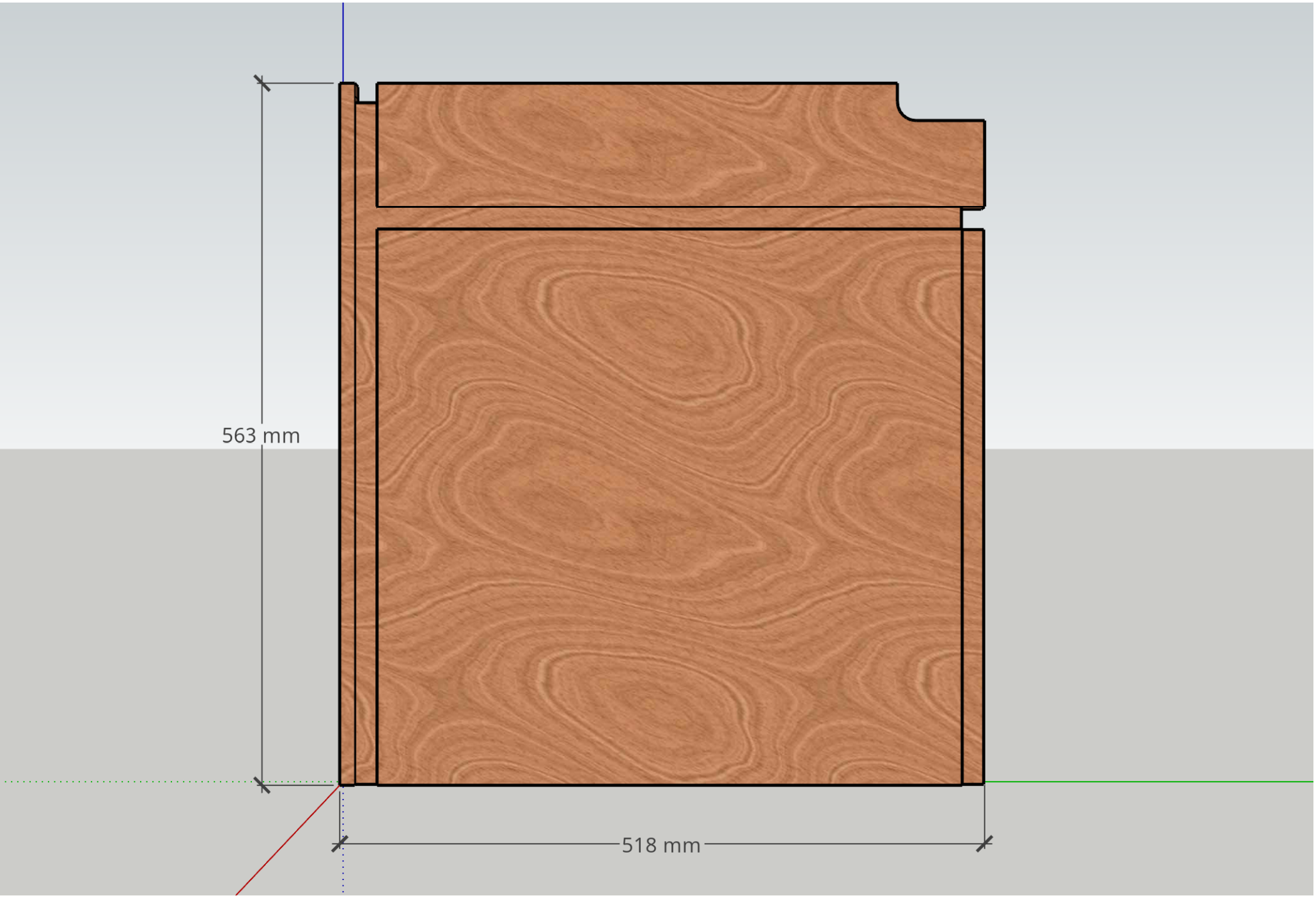
563 mm
518 mm

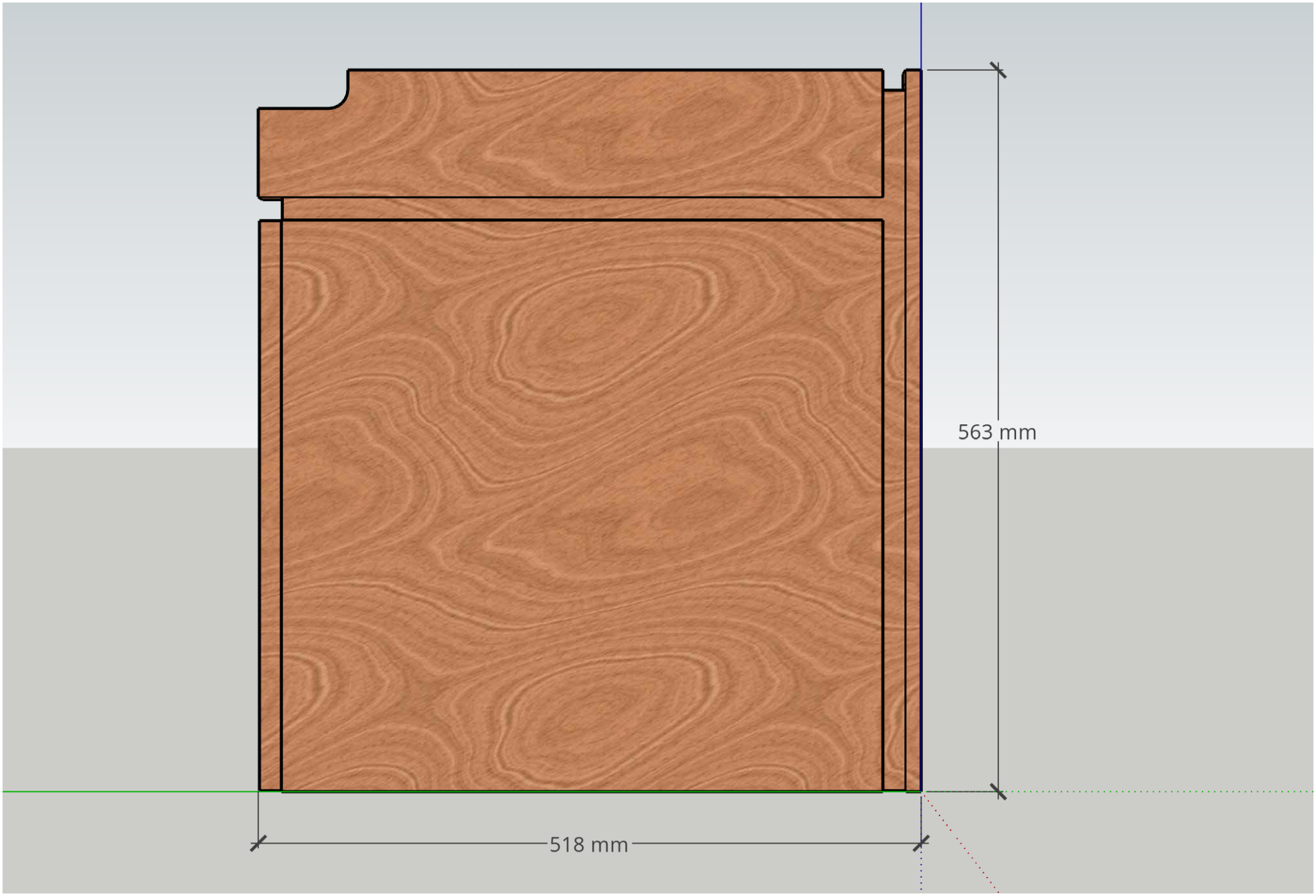
563 mm
518 mm

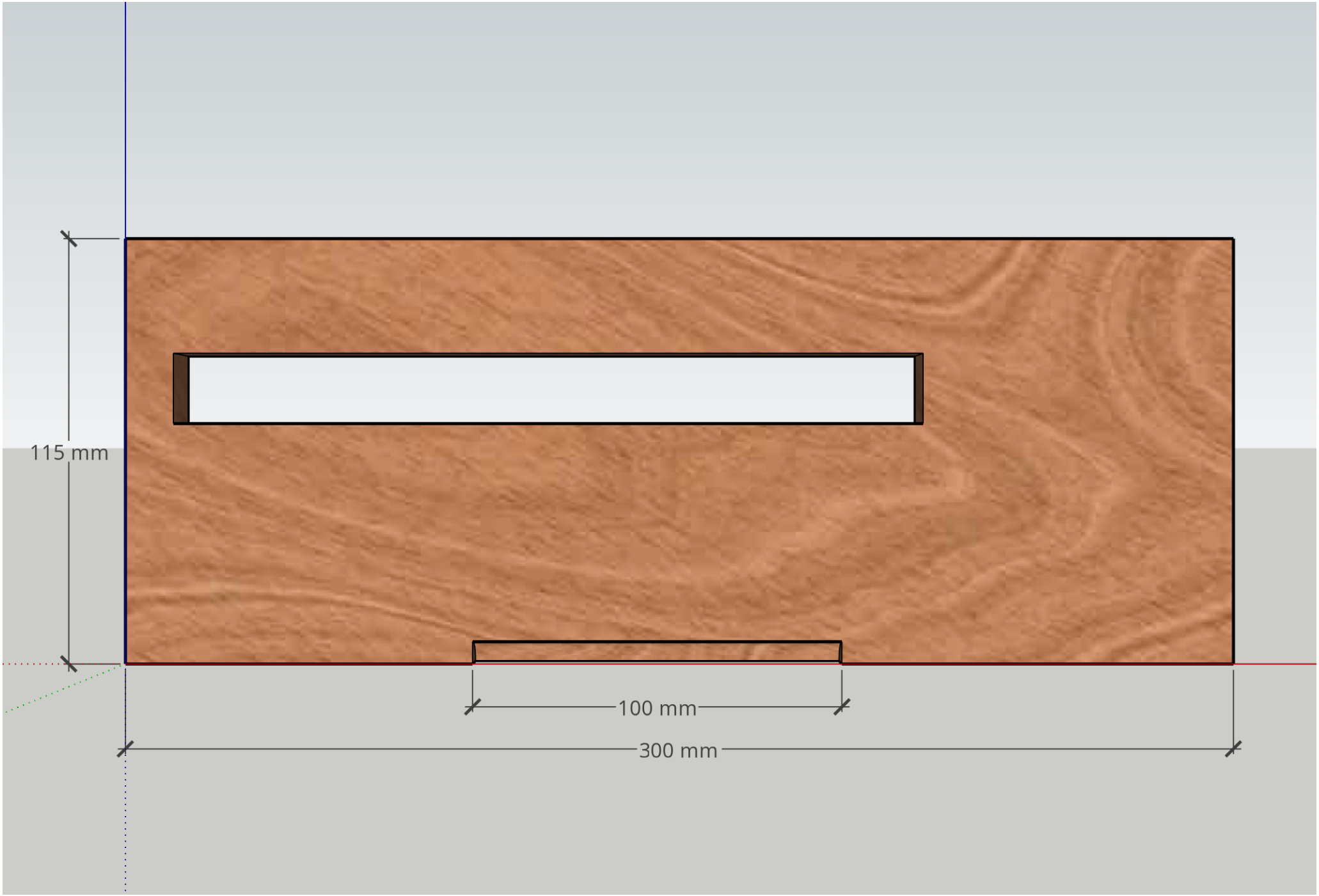
115 mm
100 mm
300 mm

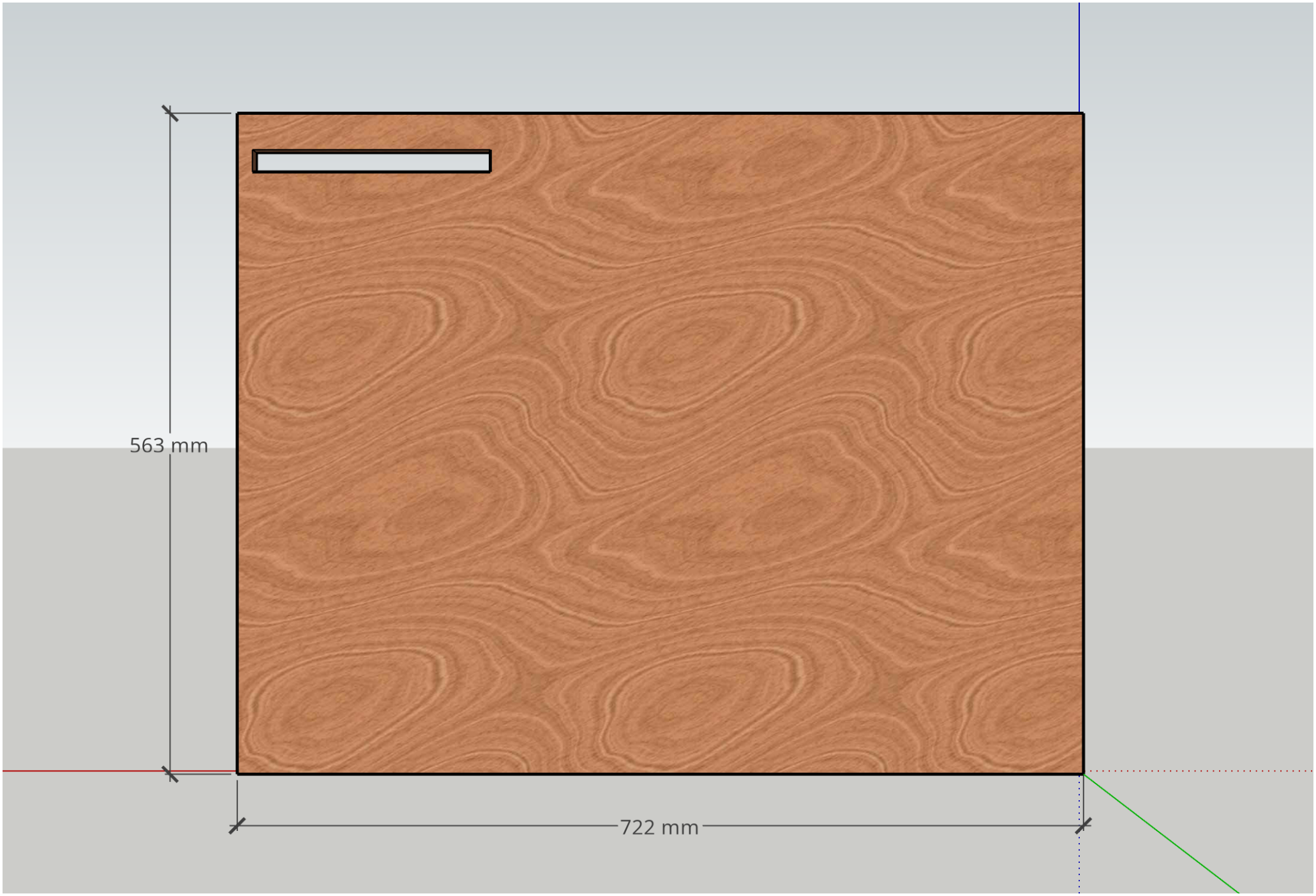
563 mm
722 mm

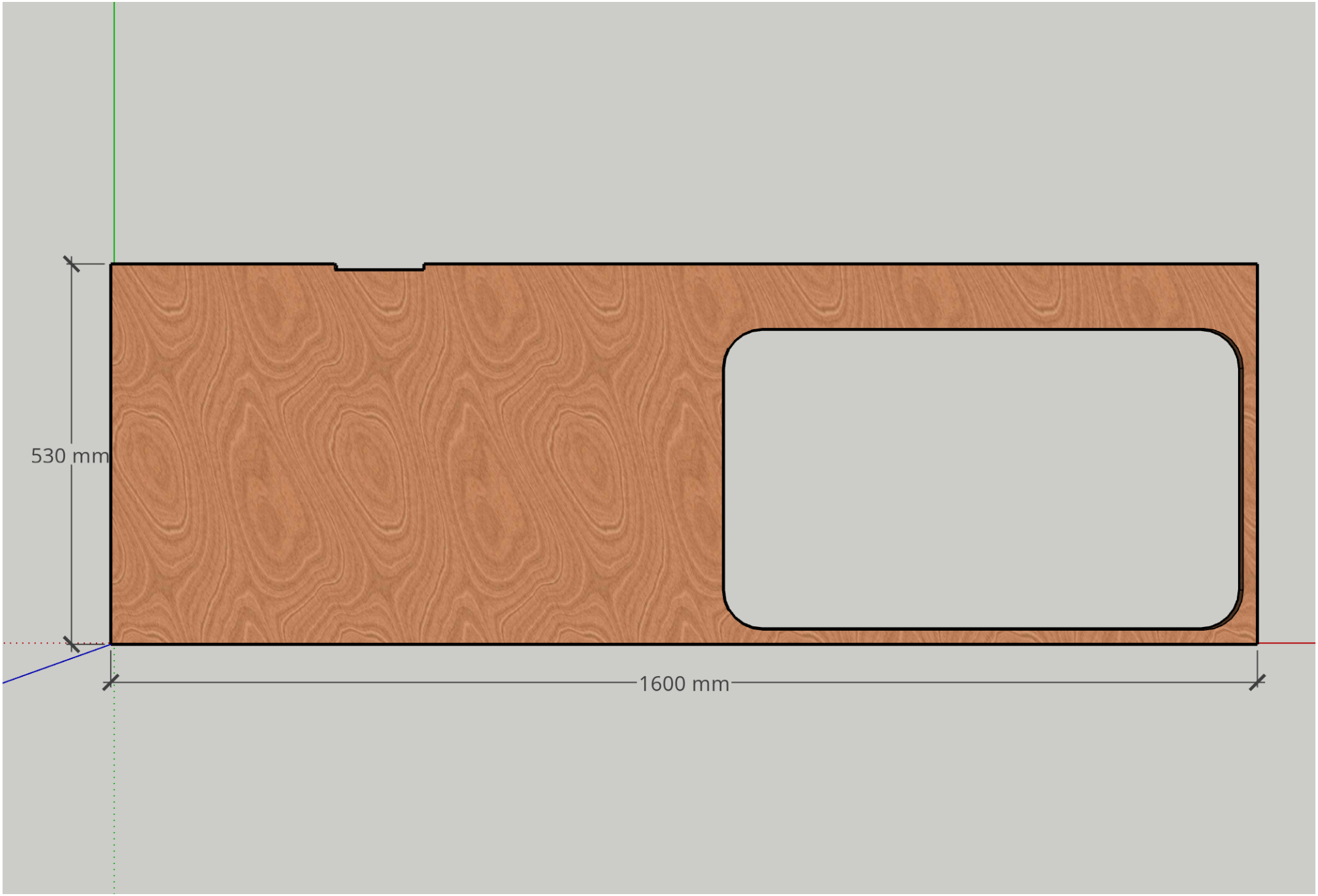
530 mm
1600 mm

96 mm
284 mm

146 mm
284 mm

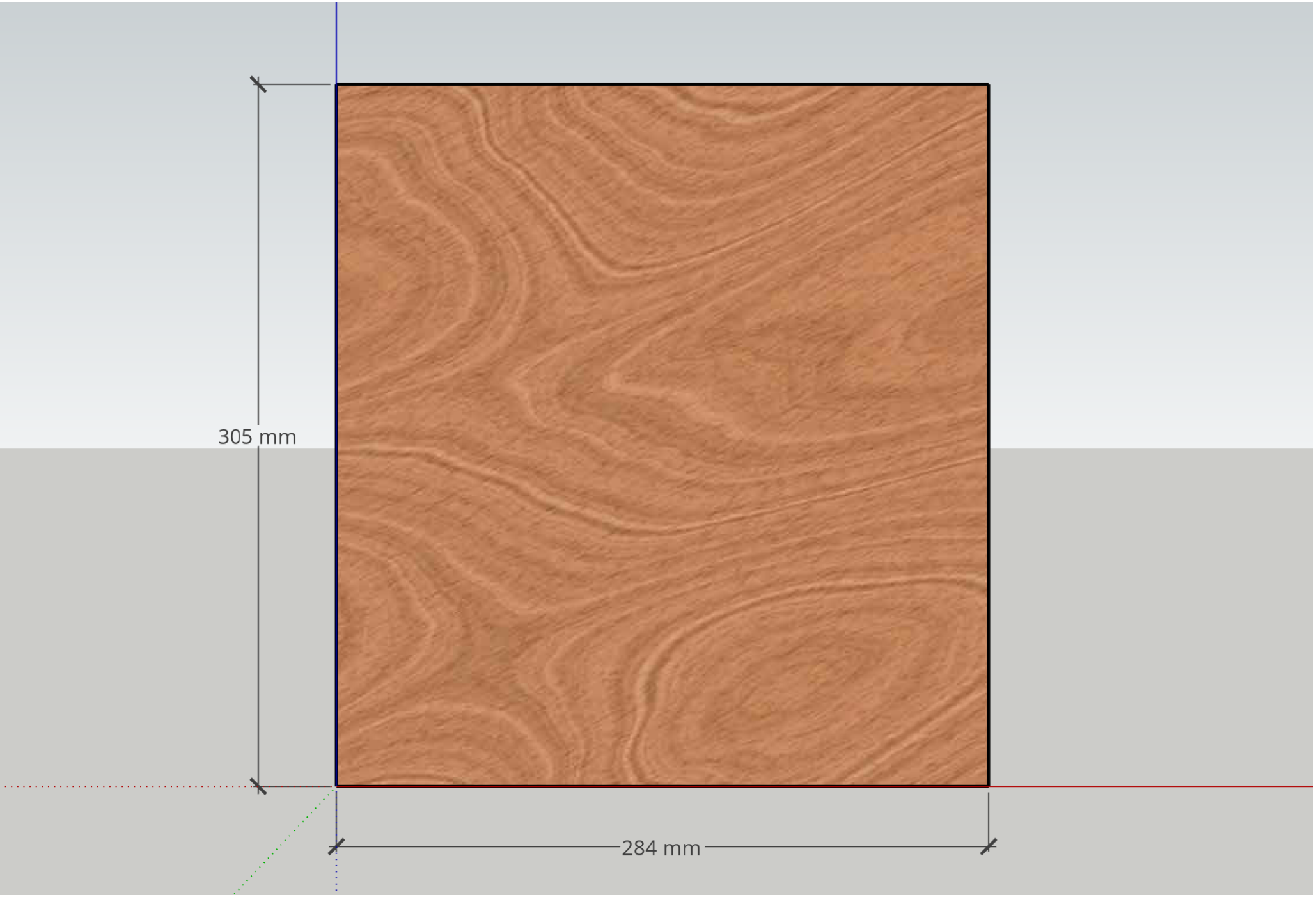
305 mm
284 mm

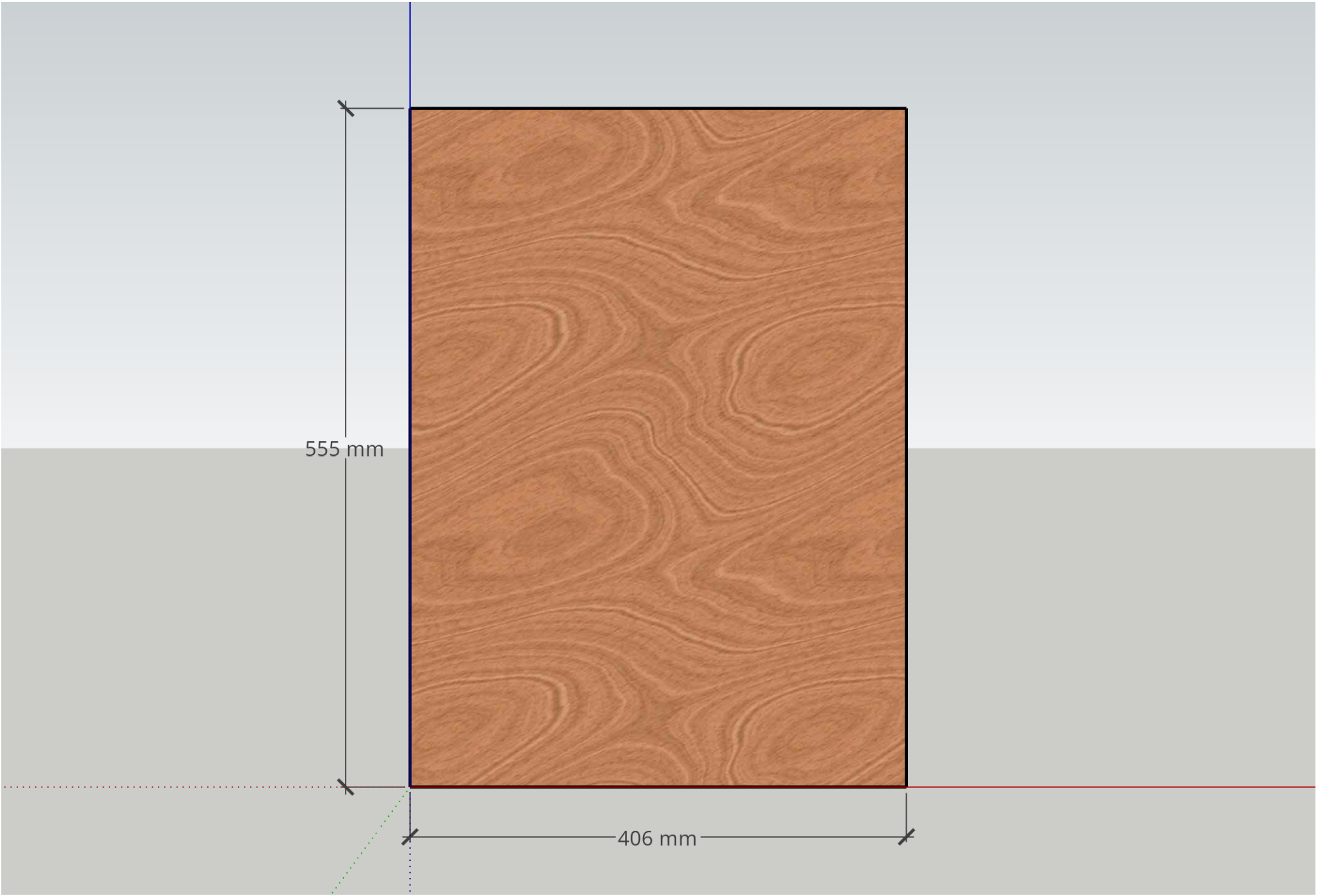
555 mm
406 mm

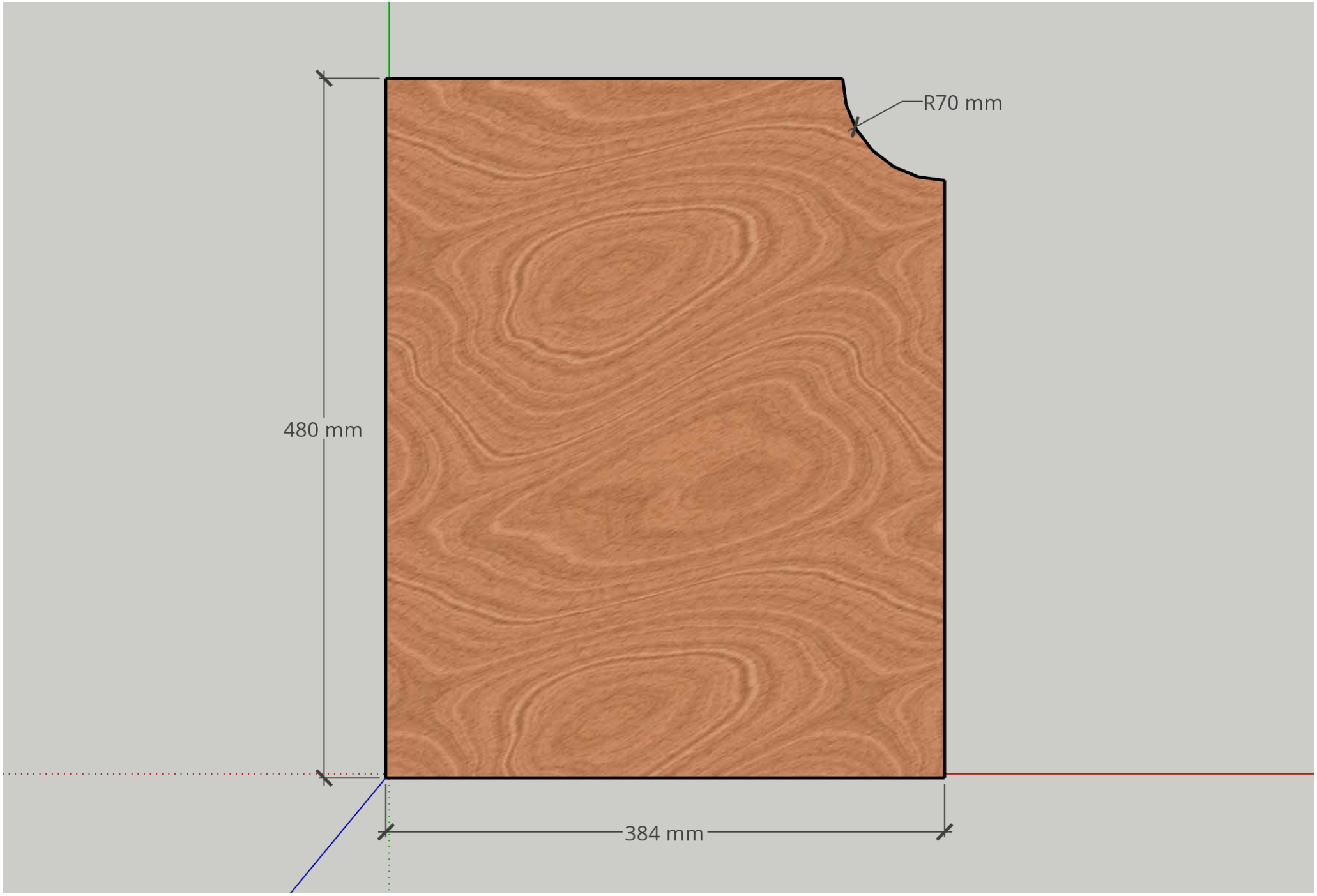
R70 mm
480 mm
384 mm

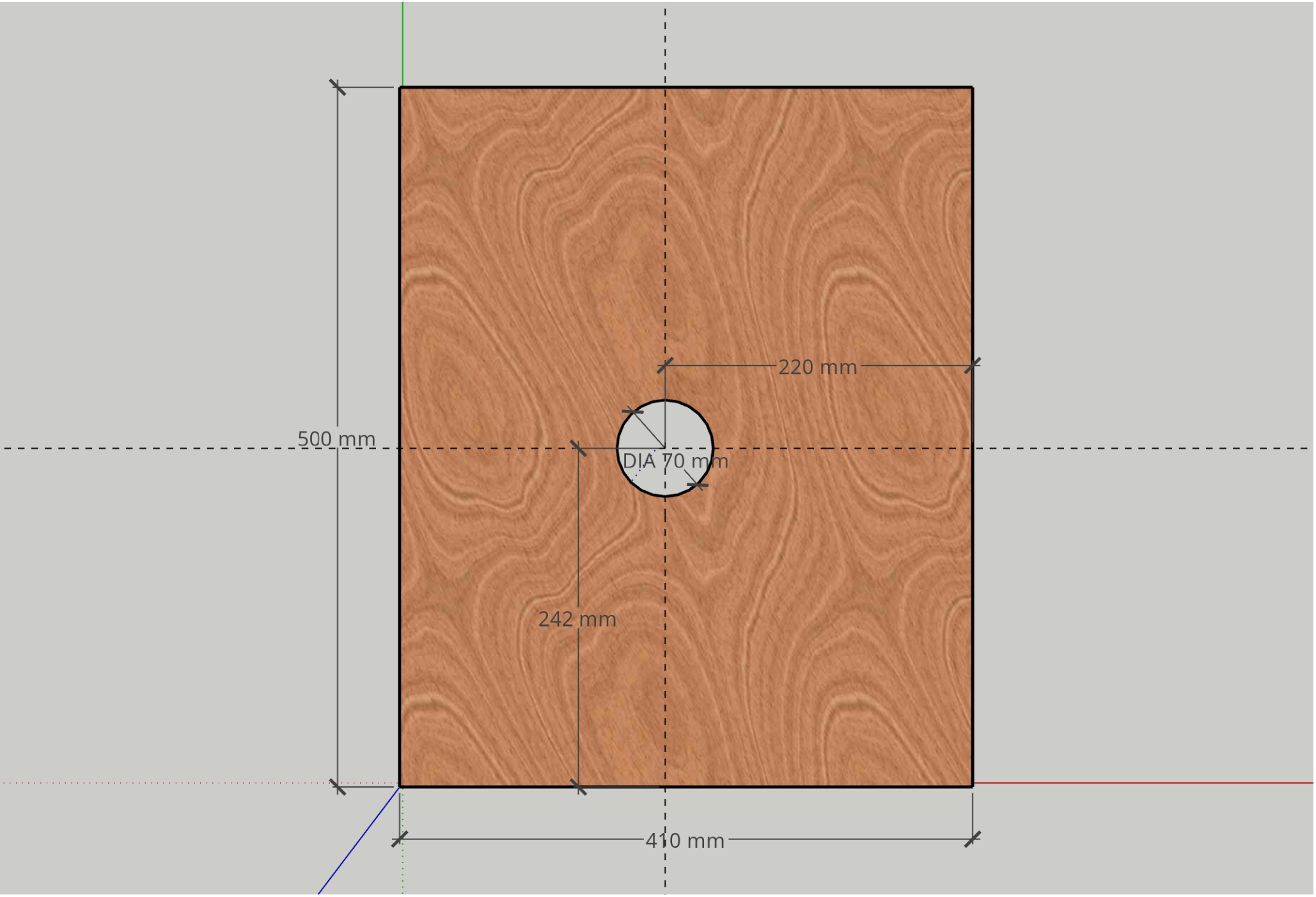
220 mm
500 mm
DIA 70 mm
242 mm
410 mm

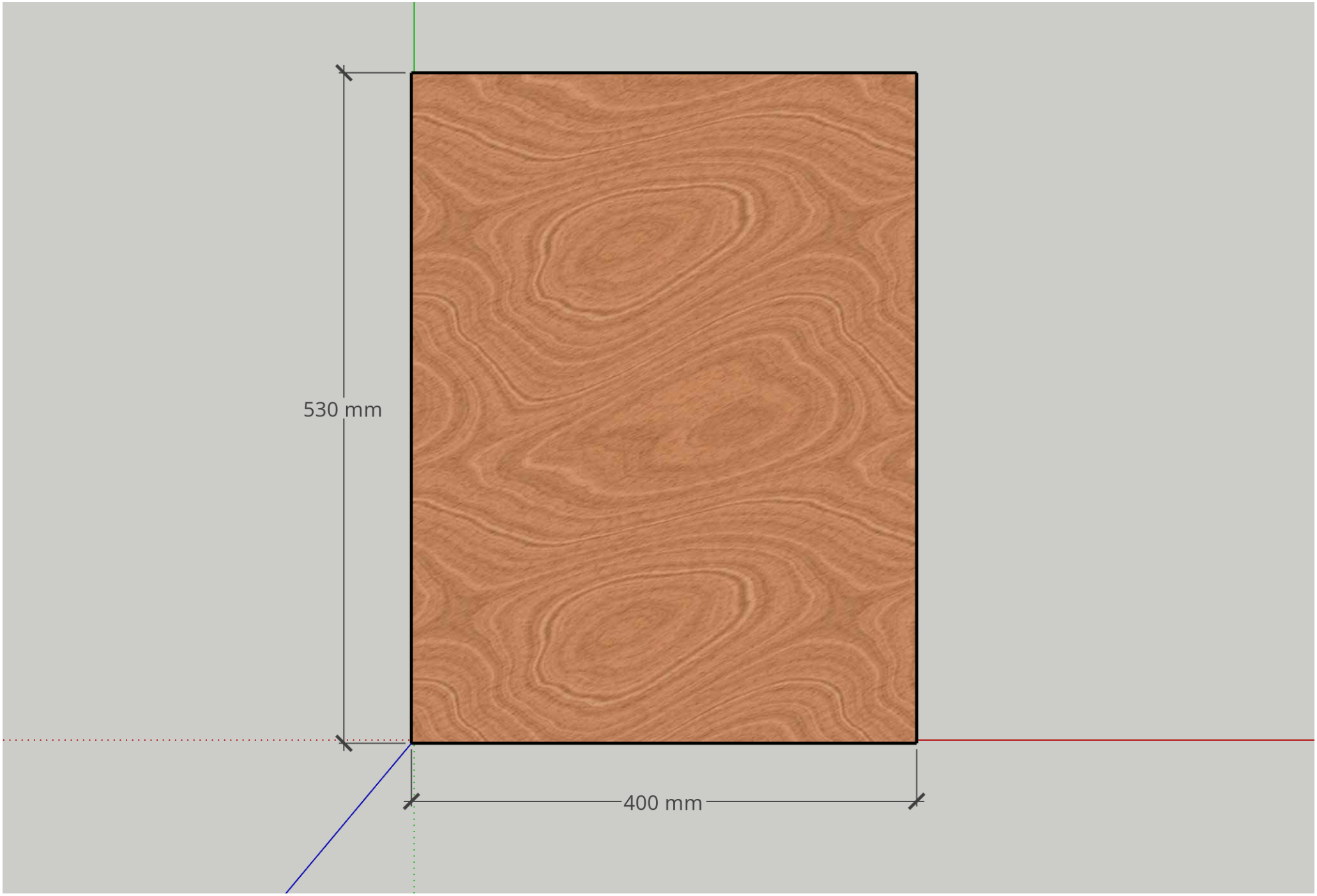
530 mm
400 mm