ACTIVE ENERGY

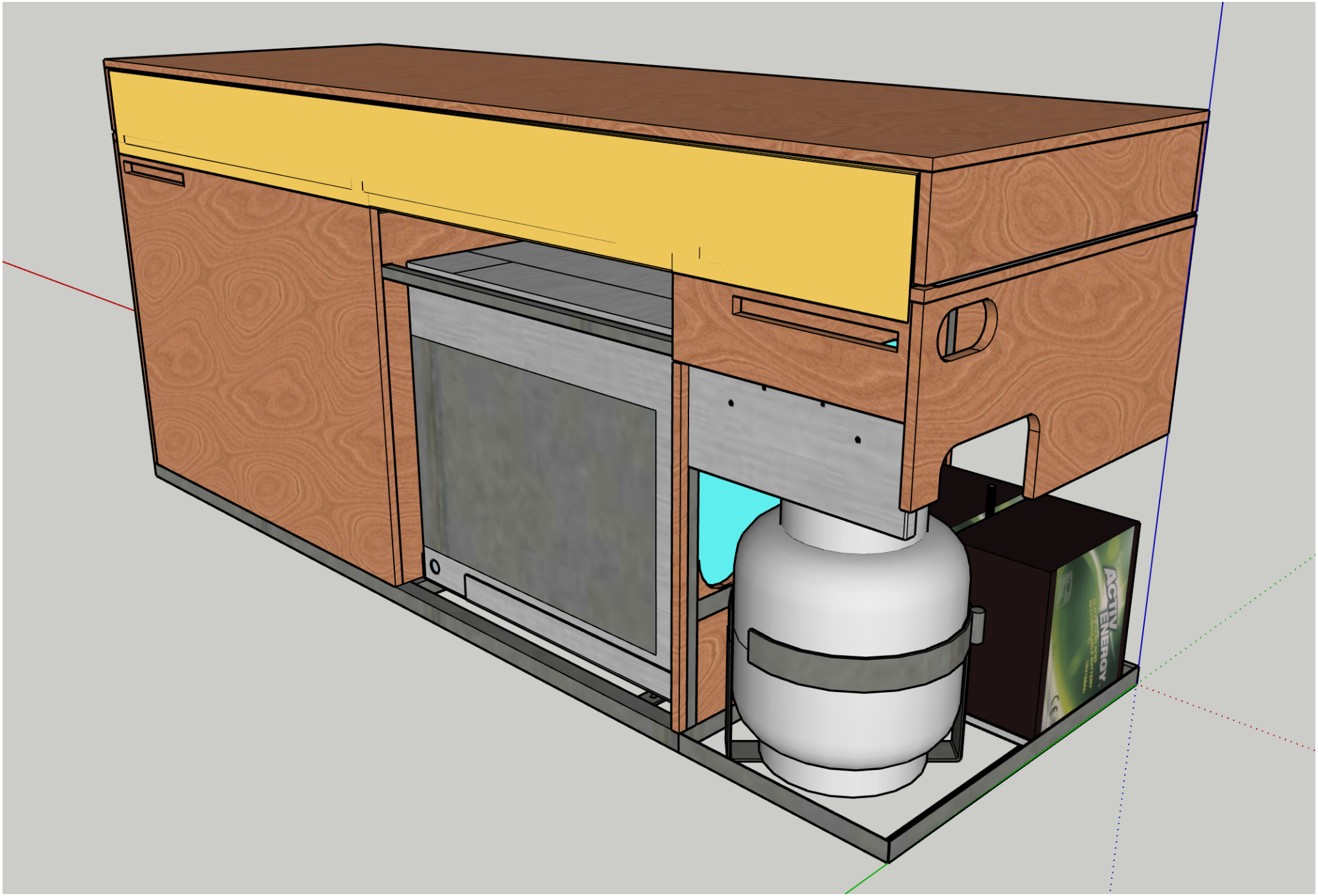
ACTIVE ENERGY

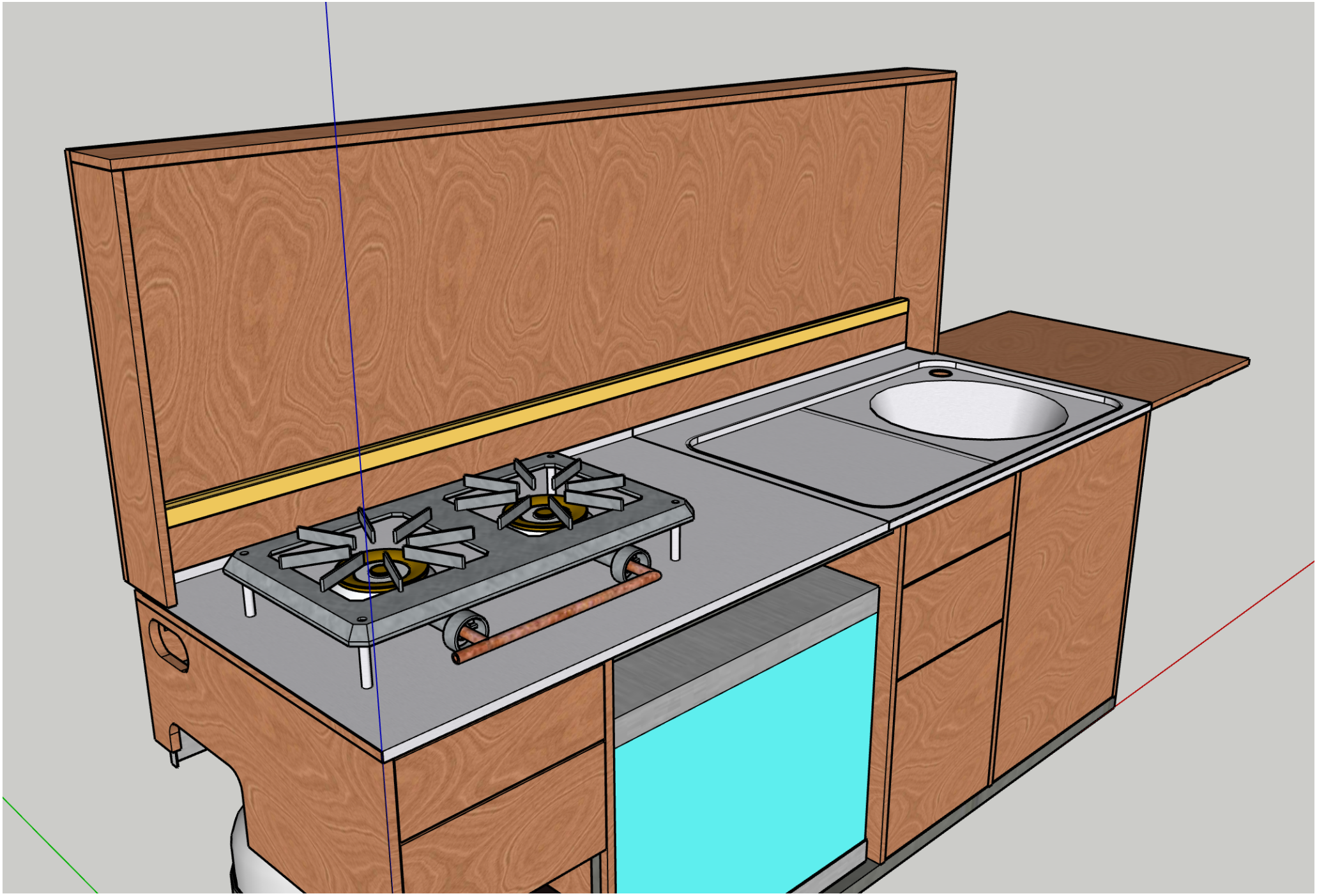

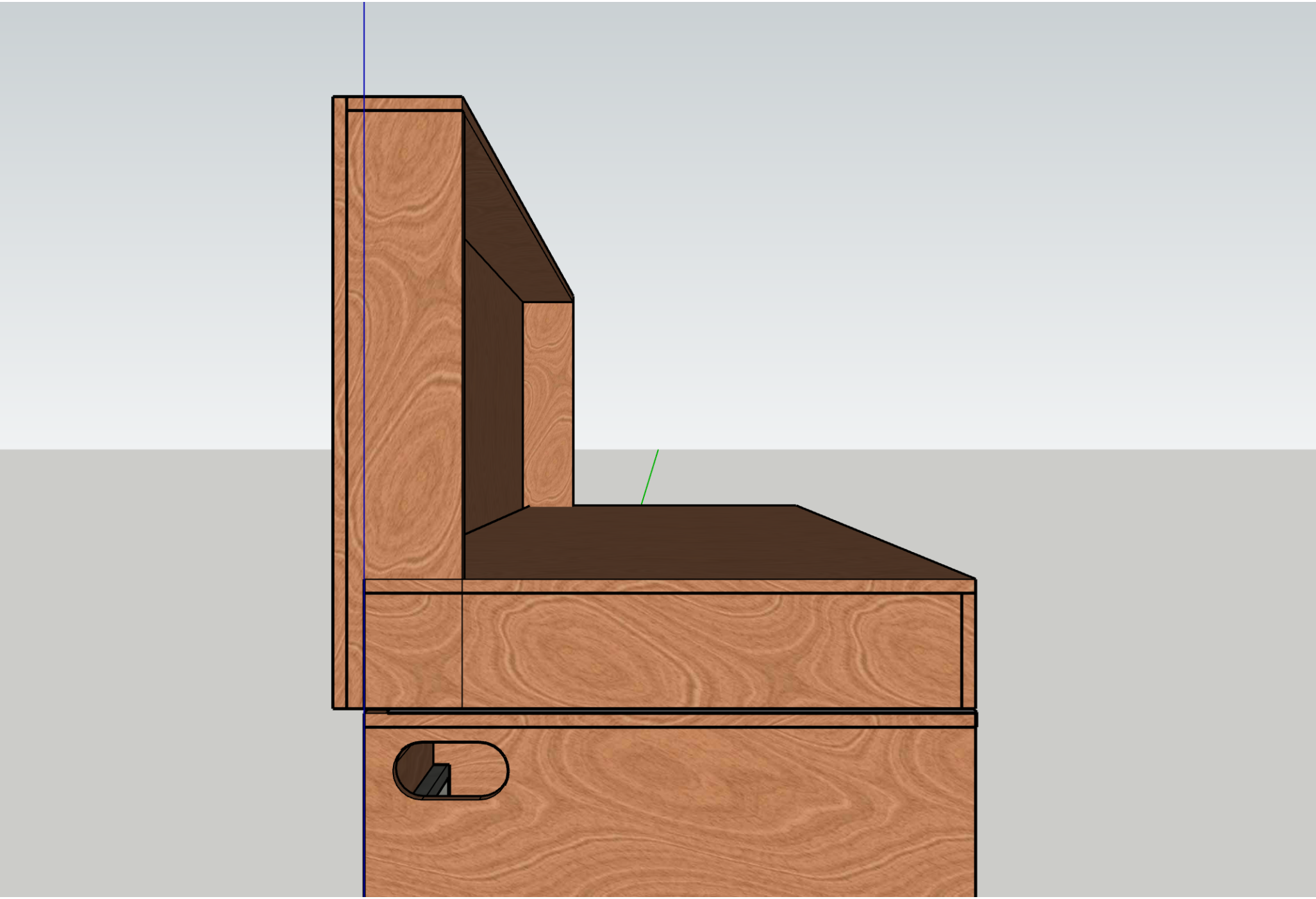

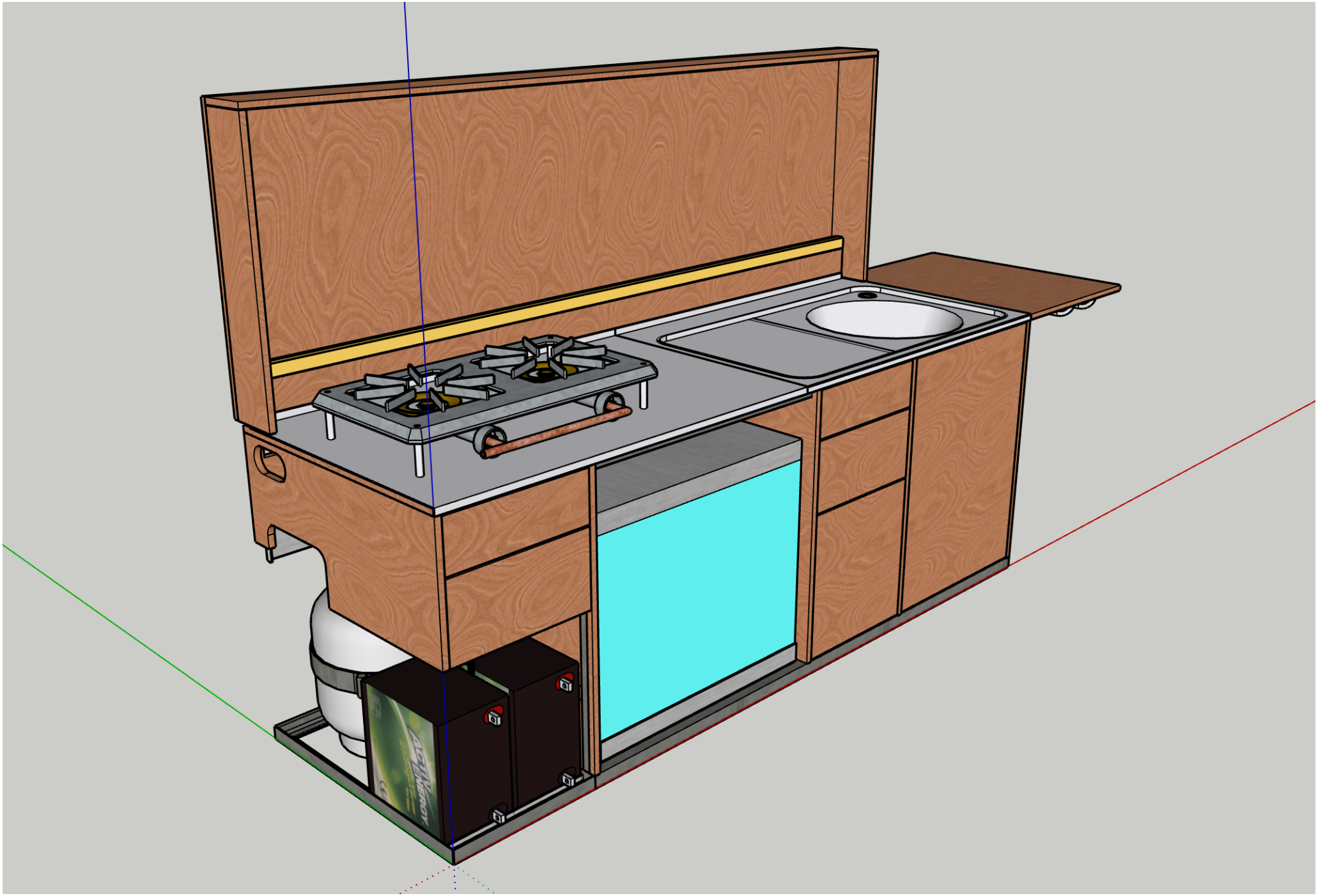
ACTIVE ENERGY

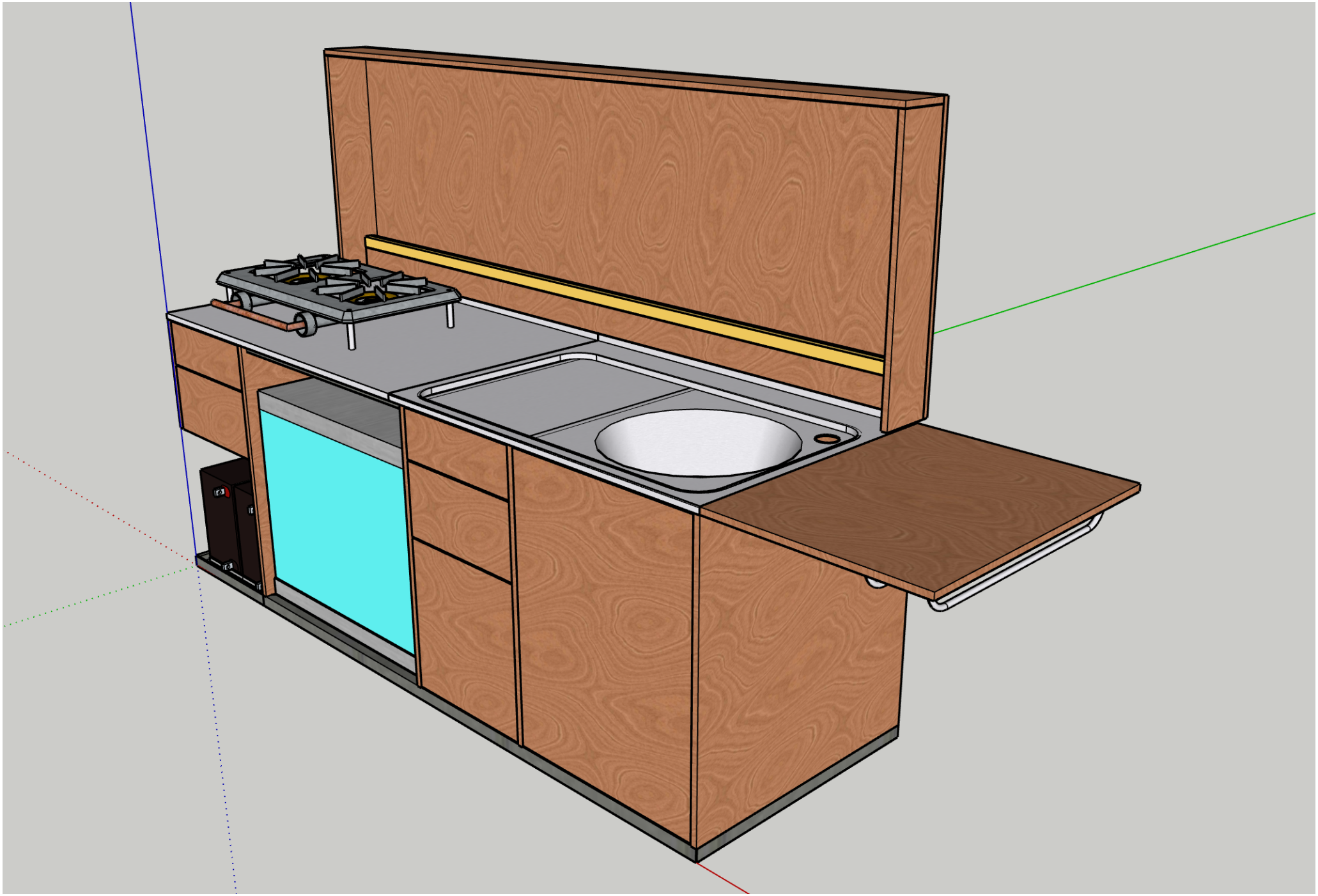

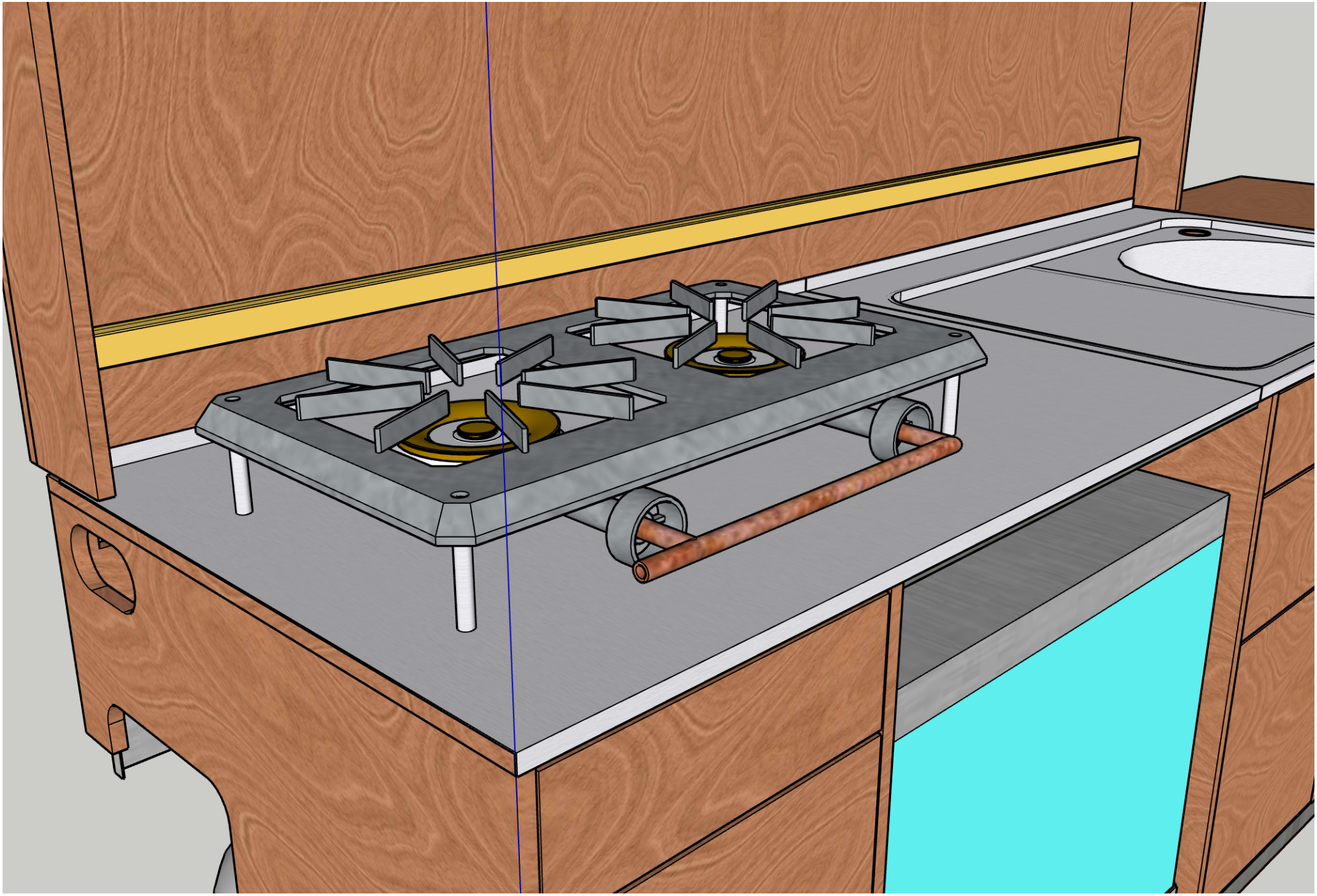

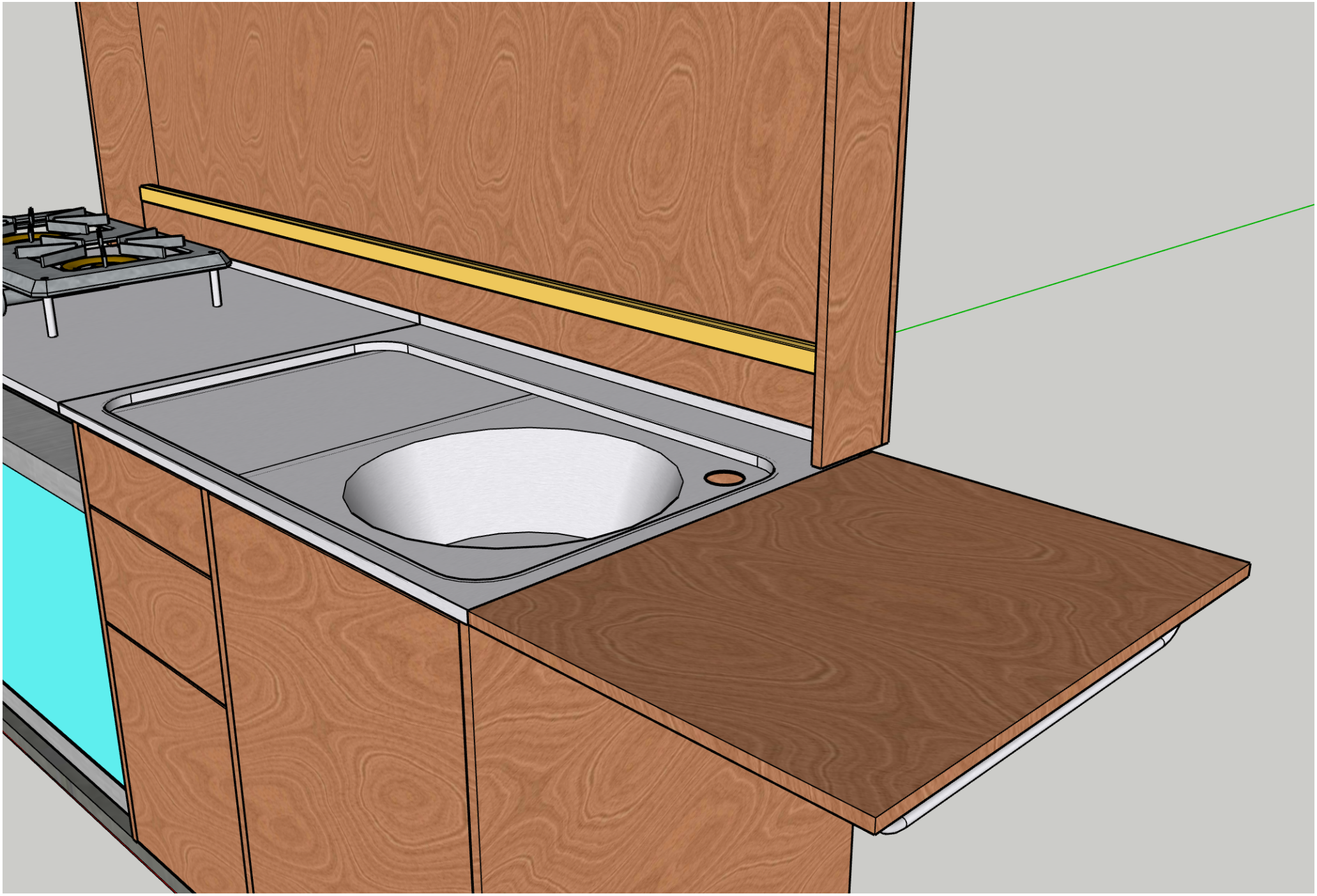

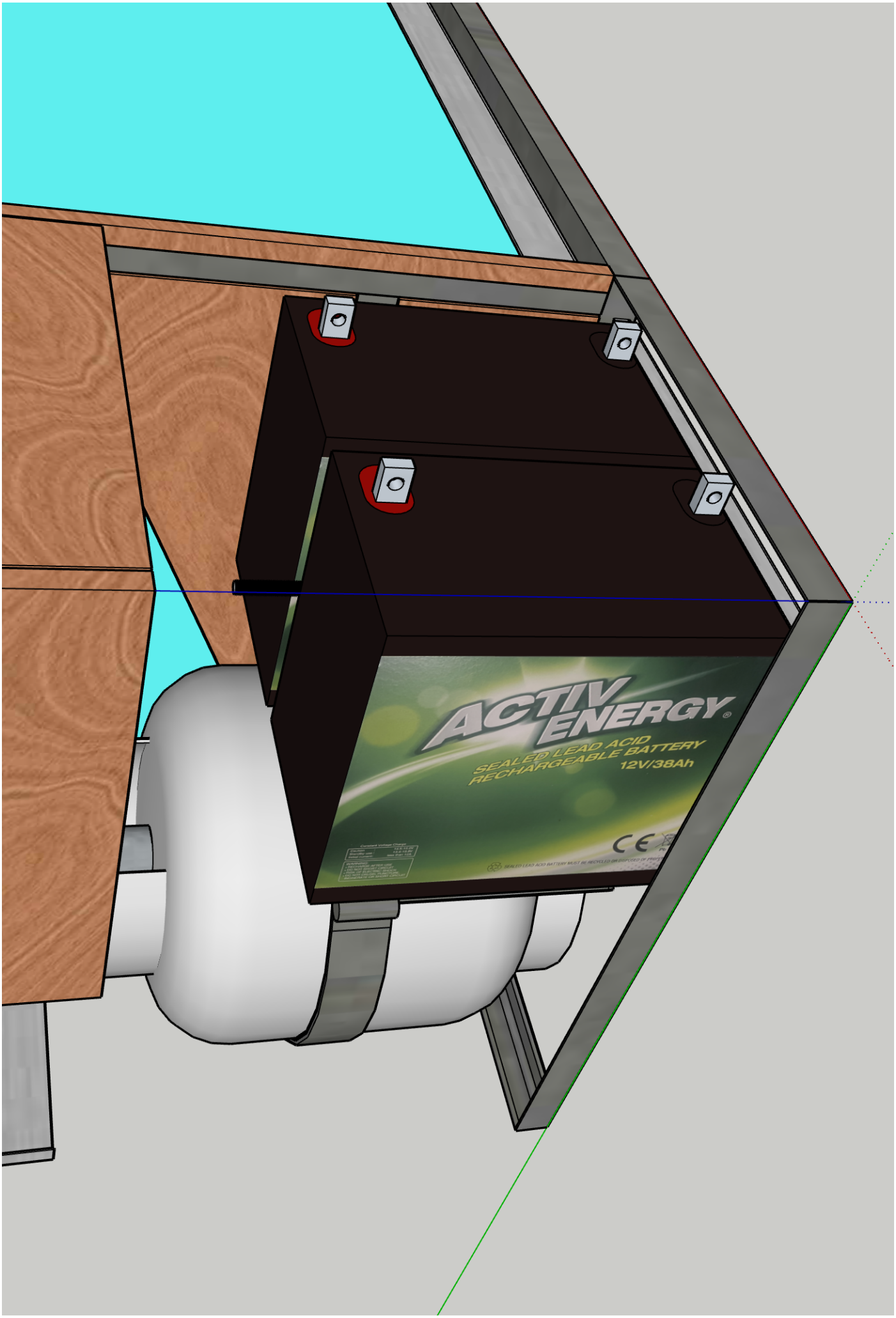
ACTIV ENERGY
SEALED LEAD ACID
RECHARGEABLE BATTERY
12V/38Ah

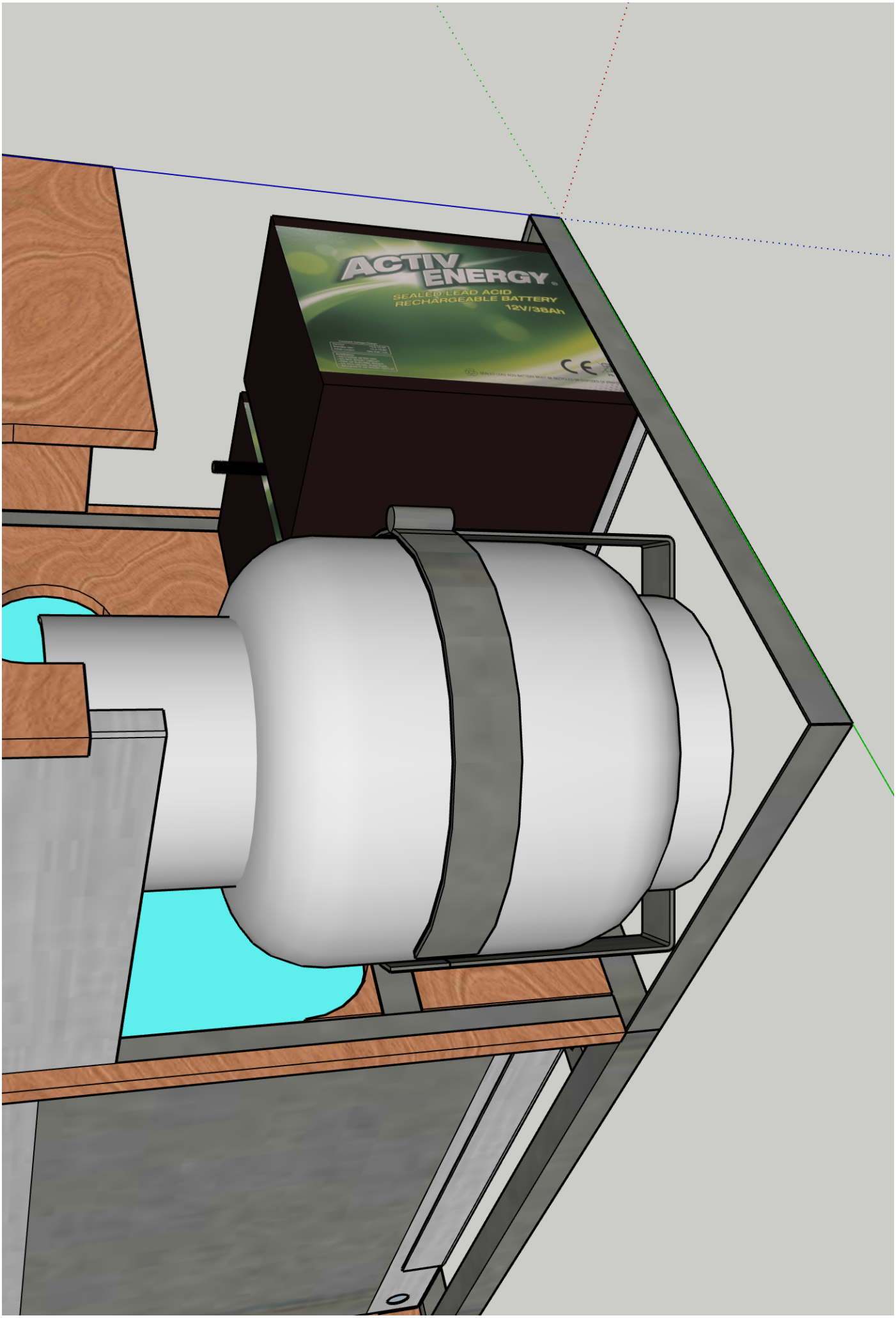
ACTIV ENERGY
SEALED LEAD ACID
RECHARGEABLE BATTERY
12V/38Ah