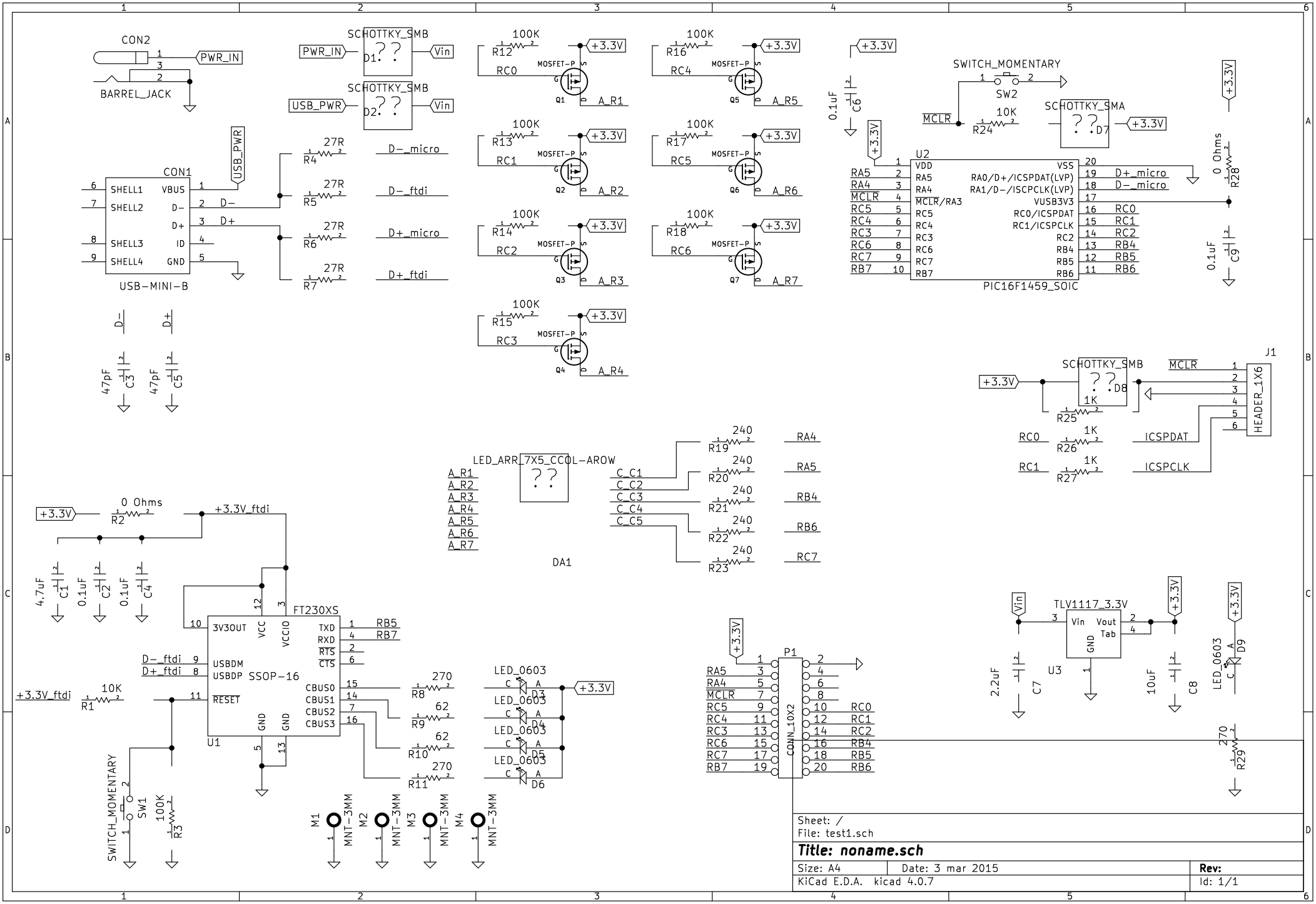
CON2
BARREL_JACK
PWR_IN
SCHOTTKY_SMB
D1
D2
Vin
USB_PWR
CON1
USB-MINI-B
SHELL1
SHELL2
SHELL3
SHELL4
VBUS
D-
D+
ID
GND
27R
R4
R5
R6
R7
D-_micro
D-_ftdi
D+_micro
D+_ftdi
100K
R12
R13
R14
R15
R16
R17
R18
RC0
RC1
RC2
RC3
RC4
RC5
RC6
MOSFET-P
Q1
Q2
Q3
Q4
Q5
Q6
Q7
A_R1
A_R2
A_R3
A_R4
A_R5
A_R6
A_R7
+3.3V
0.1uF
C6
SWITCH_MOMENTARY
SW2
MCLR
10K
R24
SCHOTTKY_SMA
D7
U2
PIC16F1459_SOIC
VDD
RA5
RA4
MCLR/RA3
RC5
RC4
RC3
RC6
RC7
RB7
VSS
RA0/D+/ICSPDAT(LVP)
RA1/D-/ICSPCLK(LVP)
VUSB3V3
RC0/ICSPDAT
RC1/ICSPCLK
RC2
RB4
RB5
RB6
0 Ohms
R28
C9
47pF
C3
C5
SCHOTTKY_SMB
D8
1K
R25
J1
HEADER_1X6
ICSPDAT
ICSPCLK
R26
R27
LED_ARR_7X5_CC0L-AROW
DA1
C_C1
C_C2
C_C3
C_C4
C_C5
240
R19
R20
R21
R22
R23
0 Ohms
R2
+3.3V_ftdi
4.7uF
C1
C2
C4
FT230XS
SSOP-16
U1
3V3OUT
VCC
VCCIO
TXD
RXD
RTS
CTS
USBDM
USBDP
RESET
GND
CBUS0
CBUS1
CBUS2
CBUS3
D-_ftdi
D+_ftdi
10K
R1
270
R8
62
R9
R10
R11
LED_0603
D3
D4
D5
D6
SWITCH_MOMENTARY
SW1
100K
R3
M1
M2
M3
M4
MNT-3MM
P1
CONN_10X2
TLV1117_3.3V
Vout
Tab
U3
2.2uF
C7
10uF
C8
D9
R29
Sheet: /
File: test1.sch
Title: noname.sch
Size: A4
Date: 3 mar 2015
Rev:
KiCad E.D.A. kicad 4.0.7
Id: 1/1