Toward an Accurate Physics-Based UAV Thruster Model

Waqas Khan and Meyer Nahon, *Senior Member, IEEE*

***Abstract*—Small unmanned aerial vehicles (UAVs) come in many types, the most common being fixed-wing and rotorcraft. Most of these are powered by brushless dc motors driving fixed-pitch propellers. Since the thrusters are typically quite powerful, relative to the weight of the aircraft, the motion of these UAVs is usually dominated by the thruster dynamics. It therefore becomes particularly important to have a good model of the thruster, which can be assembled based on simple measurements of the system properties, rather than from exhaustive testing. This paper presents such a model. The governing equations are assembled by considering, in succession, the motor electrodynamics and the propeller aerodynamics. The results of the model are compared to experimental test results for a particular thruster assembly. Agreement between the two is excellent—with an error of 4.7% in thrust and 7.6% in torque under static conditions—thereby demonstrating the validity of the proposed approach.**

***Index Terms*—Aerospace simulation, aircraft propulsion, brushless motors, unmanned aerial vehicles.**

I. Introduction

UNMANNED aerial vehicles (UAVs) have already demonstrated their widespread utility in many roles. While they are now well established in the military sphere, they have also begun penetrating civilian applications, including surveillance, search and rescue, and patrolling/monitoring operations. Like any technology in its relative infancy, UAVs come in a large variety of types, shapes, and sizes; including fixed-wing, rotorcraft, and flapping wing. The large majority of small UAVs use thruster arrangements consisting of a battery-powered dc motor driving a constant-pitch propeller. In some cases, these thrusters are tiltable, allowing vectoring of thrust.

It is worth noting that the motion of many of these small UAVs is strongly dominated by their thruster characteristics—even more so than is the case for conventional aircraft. A typical small dc-motor-powered UAV has a thrust-to-weight ratio greater than 1; often around 2; while a conventional fixed-wing transport aircraft typically has a ratio closer to 0.3. Thus, relative to conventional aircraft, the behavior of a small UAV will be much more dominated by its thruster characteristics, relative to other forces (aerodynamics, gravity). It therefore becomes particularly important to properly model the thruster dynamics of small UAVs.

It is well established that modeling of a system can provide many advantages—whether at the design stage, for controller design or for mission planning. Sometimes a system model can be used onboard, in real time, as part of the UAV controller. As such, there is a need for a general, physics-based model of typical UAV thrusters that can be used in a variety of existing UAV configurations. The purpose of this paper is to provide such a model.

Even though considerable work has been carried out on dynamic modeling of UAVs, relatively little attention has been paid specifically to their thruster models. In most of the UAV related works, a steady-state thruster model, based on Renard Formula $T = C_T \rho R^4 \omega^2$, is used such as in [1] and [2]. Pounds *et al.* [3], [4] implemented a slightly improved steady-state model by including the effect of forward velocity on thrust coefficient based on a relation given by Prouty [5]. Another work of Pounds *et al.* [6] uses the steady-state model taking into account blade flapping effect for a quadrotor. A similar model is implemented in [7] for a quadrotor UAV helicopter model.

In contrast to steady-state models, a dynamic thruster model predicts transient behavior of the thruster. Pounds *et al.* [8] proposed a thruster dynamic model, which lumped battery dynamics, motor dynamics, and aerodynamics in a single transfer function. In another work, Peddiraju [9] implemented a first-order nonlinear transfer function, to model the dynamics of the thruster, whose parameters were identified through experimentation. Dynamic models for UAV thrusters are rare in the literature and those that are available, such as the ones mentioned earlier, are developed for thrusters in stationary conditions (i.e., at zero forward speed). Furthermore, the thruster parameters, such as thrust coefficients, need to be determined experimentally, which is not trivial, and so these models have not been widely used. It is important to note that the thrust produced by a thruster reduces significantly with forward velocity; even dropping to zero at high forward speeds; and that this effect cannot be neglected.

In contrast to thruster models intended for UAVs, those for autonomous underwater vehicles (AUVs) are far better developed. For instance, [10] presents a comprehensive thruster model for AUVs composed of motor model, propeller mapping, and hydrodynamics.

The purpose of this paper is to present a model that is based on first principles, rather than detailed testing of the thruster, and is able to correctly predict thrust and reaction torque in both static and forward flight. It is intended that the relevant parameters needed for the model would be obtained through

Manuscript received August 29, 2012; revised February 11, 2013 and May 10, 2013; accepted May 15, 2013. Date of publication June 5, 2013; date of current version July 8, 2013. Recommended by Guest Editor E. Tunstel.

The authors are with the Department of Mechanical Engineering, McGill University, Montreal, QC H3A 0C3, Canada (e-mail: waqas.khan@mail.mcgill.ca, meyer.nahon@mcgill.ca).

Color versions of one or more of the figures in this paper are available online at http://ieeexplore.ieee.org.

Digital Object Identifier 10.1109/TMECH.2013.2264105

1083-4435/$31.00 © 2013 IEEE
Authorized licensed use limited to: Viet Nam National University Ho Chi Minh City. Downloaded on April 03,2026 at 09:44:21 UTC from IEEE Xplore. Restrictions apply.

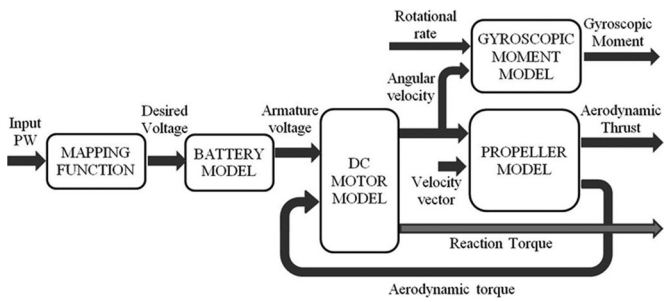

Fig. 1. Schematic of the perceived thruster model showing all submodels, inputs, and outputs.

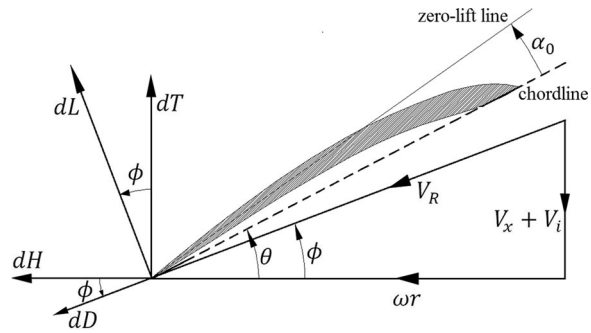

Fig. 2. Cross-sectional view of the propeller showing velocity components, differential lift, and drag.

simple measurements or from manufacturer specifications. The approach used to model the thruster is to consider all the component effects: dc motor dynamics, propeller aerodynamics, rotor inertia, and gyroscopic effects. The validity of the model is then demonstrated through a set of comparisons between simulation results and experiments.

II. Thruster Model

A. System Description

The generic system considered here consists of a brushless dc motor (BLDC) coupled with a propeller, powered by a Lithium–Polymer (LiPo) battery, and driven by an electronic speed controller (ESC) that is controlled by pulse width modulation (PWM) to alter the speed of the motor. Pulsewidth (PW) commands are sent by the user as a control input. The generic system is shown diagrammatically in Fig. 1.

B. Battery Dynamics

Most electric powered UAVs use LiPo/Li-ion batteries as their primary source of power due to their high energy density and long life.

Several models for battery dynamics are available in the literature such as those given in [11] and [12]. Inclusion of battery effects, such as capacity fading effect and temperature dependent effects, in conjunction with parameter identification from extensive experimental testing renders these models complex for use. Instead, a much simpler battery model is implemented, based on the work in [8], with a transfer function given by

$$G(s) = \frac{s + z_b}{s + p_b}. \tag{1}$$

The linear battery model (1) represents a high pass filter that models a constant voltage drop with time. Ratio z_b/p_b defines the ratio of final steady-state value to initial value of the armature voltage. The model has two parameters: z_b and p_b; one input: desired voltage V_{des}; and one output: armature voltage V_a.

C. Motor Dynamics

BLDC motors are the most common type of electric motors employed on lightweight UAVs. DC motor models can easily be derived by applying Kirchhoff's current law to the motor's electrical system and Newton's second law to the motor's mechanical system, as presented in [13]–[15]. The two equations; electrical and mechanical, expressed in the s-domain, coupled together form the dynamic model of a dc motor

$$I_a = \frac{V_a - K_v \Omega}{L_a s + R_a} \tag{2}$$

$$\Omega = \frac{K_t I_a - Q}{J s + K_d}. \tag{3}$$

To fully define the motor model, the following parameters are needed: resistance R_a and inductance L_a of the armature, velocity constant K_v representing back EMF generated per rev/min of the armature, torque constant K_t representing torque generated per ampere of armature current I_a, damping constant K_d representing damping between rotor and stator, and rotational inertia J representing inertia of all rotating components of the BLDC motor. Inputs to the system are armature voltage V_a and aerodynamic torque Q, and its outputs are angular velocity ω (represented by Ω in the s-domain) and reaction torque $\tau = J\dot{\omega} + K_d\omega + Q$ exerted on the airframe.

D. Propeller Aerodynamics

The aerodynamics of a thruster is primarily related to its propeller which transforms rotational motion into linear thrust. We assume that the physical characteristics of the propeller are known, i.e., the following parameters are given and defined as functions of radial location r: chord c, chordline pitch angle θ, zero-lift angle of attack α_0, 2-D lift curve slope a, and 2-D drag coefficient C_d.

A propeller can be viewed as a series of airfoils that each generate lift and drag when rotating at high speeds, and together they constitute the total aerodynamic thrust and torque on the propeller.

Among the several methods that exist in literature for analyzing propellers, blade element momentum theory (BEMT) is a relatively simple but accurate one. BEMT can be seen as a combination of blade element theory (BET) and momentum theory each resulting in an equation with two unknowns, thrust T, and an inflow angle ϕ (angle between the resultant velocity V_R with the propeller plane as shown in Fig. 2), which may then be solved simultaneously for the unknowns. Once inflow angle is known, another expression for aerodynamic torque Q may be found from BET or momentum theory.

Authorized licensed use limited to: Viet Nam National University Ho Chi Minh City. Downloaded on April 03,2026 at 09:44:21 UTC from IEEE Xplore. Restrictions apply.

Most texts, such as [16], provide expressions to evaluate thrust and torque. Because of the underlying simplifying assumptions, such as small inflow angle, etc., such expressions are not used here. Rather, in this paper, BEMT has been applied to the propeller with fewer simplifying assumptions.

1) Bend-Twist Coupling: Propellers found on small UAVs are manufactured to be small and light weight, and it is therefore important to consider their structural rigidity during operation. To achieve maximum possible thrust for a given power input, the small propeller is designed with thin, low-cambered airfoils having sharp trailing edge and inherently large pitching moment coefficients [8]. During operation, each differential section of the propeller blade generates aerodynamic moment that tends to twist the blade, changing its incidence.

Furthermore, being cantilevered at the hub, the propeller blade experiences aeroelastic bending under aerodynamic loading (due to thrust) and centrifugal action (due to rotation), owing to which it may "cone" outward. With substantial coning, the flow around the blades, especially in the radial direction, can affect the loading and induced velocity distribution along the blade span. In this case, BEMT (which is based on axial and tangential momentum balance) cannot be used alone but in conjunction with other methods such as the Navier–Stokes equations [17]. The bending deformation (coning) is particularly important for long and flexible blades such as those of wind turbines, but is not as important for small UAV propellers and is neglected in this paper.

Iterative methods to determine the aeroelastic deformations (also called the bend-twist coupling effect) during propeller operation can be found in [8], [18] and [19]. However, most of these references pertain to composite marine propellers. For UAV propellers, only the twisting effect is considered by Pounds in one of his works [8]; but it is seen that this effect does not significantly influence the propeller's thrust and torque characteristics. Therefore in this paper, the propeller blade is assumed to be rigid, i.e., the bend-twist deformation does not induce a significant change in the propeller's performance.

2) Relative Airflow: As the propeller translates along with the UAV, it will be subjected to relative airflow in all three axes; the x-component representing axial flow into the propeller while the y- and z-components are in the propeller's plane of rotation. This paper deals only with forward motion of the thruster, i.e., only the axial component V_x is considered as shown in Fig. 3.

Relative airflow also exists in the plane of rotation due to the propeller rotation ω about its own axis. Furthermore, the propeller undergoes large rotations along with the UAV, but the effect of this is only to produce an additional gyroscopic moment which will be evaluated in a later section.

3) Blade Element Theory: In BET, the propeller is discretized radially into a finite number of segments each producing a differential thrust dT and aerodynamic torque dQ.

A differential segment of length dr at a distance r from the propeller hub experiences relative airflow having the following generic components: translational velocity V_x due to the translation of the propeller through air, velocity ωr due to its rotation, and induced velocity V_i due to the inflow caused by the pressure difference produced by the rotating propeller.

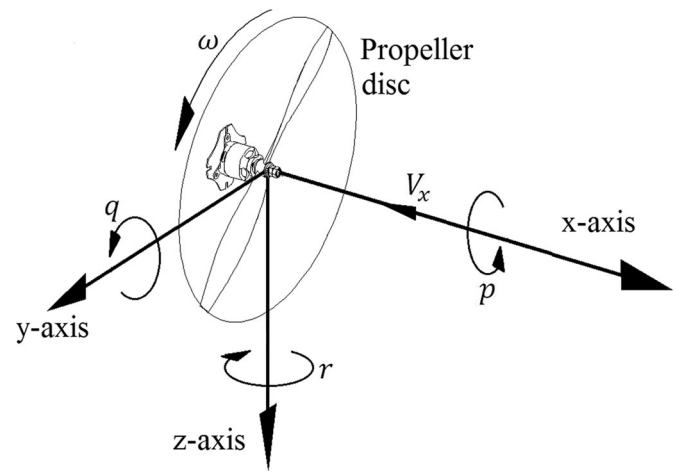

Fig. 3. Relative airflow due to motion of the propeller.

The induced velocity has itself, in general, three components—axial, circumferential, and radial components. However, the circumferential and radial components are negligible compared to the axial component [16], and so only the axial component is considered here. The resultant relative air velocity V_R, which is the vector sum of all the aforementioned components, causes a differential lift dL and differential drag dD on the segment. From Fig. 2, the inflow angle can be expressed as

$$\tan\phi = \frac{V_x + V_i}{\omega r}. \tag{4}$$

The differential lift on the section can be written as

$$dL = \frac{1}{2}\rho V_R^2 C_l dA = \frac{1}{2}\rho V_R^2 C_l c dr$$

where ρ is the density of air in kg/m^3; the section lift coefficient is $C_l = a(\theta - \alpha_0 - \phi)$; and the resultant velocity, from the geometry in Fig. 2, is $V_R = \omega r/\cos\phi$.

Then,

$$dL = \frac{1}{2}\rho\left(\frac{\omega r}{\cos\phi}\right)^2 a(\theta - \alpha_0 - \phi) c dr.$$

A similar expression for differential drag can be obtained

$$dD = \frac{1}{2}\rho\left(\frac{\omega r}{\cos\phi}\right)^2 C_d c dr.$$

From Fig. 2, the differential thrust is

$$dT = dL\cos\phi - dD\sin\phi.$$

Substituting values of dL and dD yields

$$dT = \frac{1}{2}\rho\frac{(\omega r)^2}{\cos\phi} c[a(\theta - \alpha_0 - \phi) - C_d\tan\phi]dr.$$

This is the differential thrust acting on an element of one propeller blade. The differential thrust of an annulus of the propeller is obtained by summing this over all the N blades of the propeller

$$dT = \frac{1}{2}\rho N\frac{(\omega r)^2}{\cos\phi} c\left[a(\theta - \alpha_0 - \phi) - C_d\tan\phi\right]dr. \tag{5}$$

Authorized licensed use limited to: Viet Nam National University Ho Chi Minh City. Downloaded on April 03,2026 at 09:44:21 UTC from IEEE Xplore. Restrictions apply.

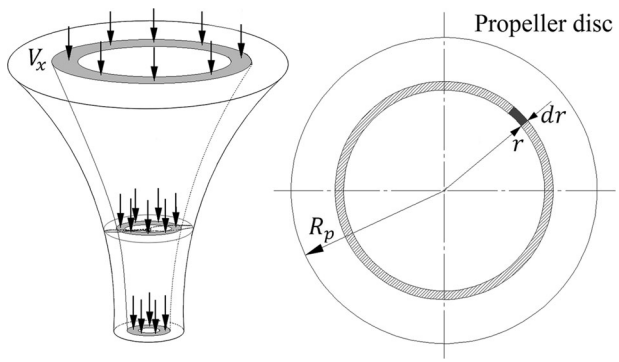

Fig. 4. Control volume around a propeller (left) and the annulus on the propeller disc (right).

4) Momentum Theory: In most aerodynamic texts (see, e.g., [16], [20]), differential thrust is expressed using momentum theory over an annulus of the propeller disc as shown in Fig. 4

$$dT = 4\pi\rho r V_i \left(V_x + V_i\right) dr.$$

Equation (4) can be used to eliminate V_i and, after some simplification, we find

$$dT = 4\pi\rho r^2 \omega \tan\phi \left(\omega r \tan\phi - V_x\right) dr. \tag{6}$$

5) Inflow Angle: Equations (5) and (6) are expressions for differential thrust over an annulus derived from BET and momentum theory, respectively, and contain two unknowns namely differential thrust dT and inflow angle ϕ. In most texts, these two equations are integrated from $r = R_h$ (propeller hub radius) to R_p (radius of the propeller), while assuming ϕ to be constant or a linear function of r, and then solved simultaneously for thrust. In this paper, the two differential equations are equated, prior to integration, and simplified to yield

$$\omega N c \left[a(\theta - \alpha_0 - \phi) - C_d \tan\phi\right] = 8\pi \sin\phi(\omega r \tan\phi - V_x). \tag{7}$$

The nonlinear equation (7) may be solved for the inflow angle at each section such that $0 < \phi < \pi/2$. A key advantage of this approach is that no *a priori* assumption is made on how ϕ varies with r. Rather, $\phi(r)$ is found as a result of solving (7).

6) Aerodynamic Thrust: With inflow angle evaluated at each section, the aerodynamic thrust T of the propeller may be evaluated via numerical integration of (5), while replacing the differential segment dr by a finite segment Δr

$$T = \frac{1}{2}\rho N \omega^2 \sum_{r=R_h}^{R_p} \left[\frac{r^2}{\cos\phi} c \left[a(\theta - \alpha_0 - \phi) - C_d \tan\phi\right]\right] \Delta r. \tag{8}$$

An expression for aerodynamic thrust may also be obtained via integration of (6) but this will yield an equivalent result since (5) and (6) have been equated.

7) Aerodynamic Torque: From Fig. 2, the differential torque dQ can be expressed as

$$dQ = r dH = (dL \sin\phi + dD \cos\phi) r.$$

A final expression for aerodynamic torque Q can be derived in a similar fashion to that of aerodynamic thrust.

$$Q = \frac{1}{2}\rho N \omega^2 \sum_{r=R_h}^{R_p} \left[\frac{r^3}{\cos\phi} c \left[a(\theta - \alpha_0 - \phi) \tan\phi + C_d\right]\right] \Delta r. \tag{9}$$

8) Propeller Model: Equations (7)–(9) constitute the propeller model. This model needs two inputs: axial velocity V_x and angular velocity ω of the propeller, and it outputs the aerodynamic thrust T and aerodynamic torque Q.

E. Gyroscopic Moments

While spinning about its own axis, a thruster mounted on an agile UAV will likely undergo large rotations; given by a vector $\boldsymbol{\omega}_t = [p\ q\ r]^{\mathrm{T}}$; as shown in Fig. 3. This will give rise to a gyroscopic moment $\boldsymbol{M}_{\mathrm{gyro}}$ which can be expressed as

$$\boldsymbol{M}_{\mathrm{gyro}} = \boldsymbol{\omega}_t \times \boldsymbol{H}_t = \boldsymbol{\omega}_t \times I_t \boldsymbol{\omega}$$

where $\boldsymbol{H}_t$ is the angular momentum vector of the thruster, I_t is its inertia tensor, and $\boldsymbol{\omega}$ is its angular velocity vector.

The aforementioned expression may be simplified based on the particular thruster configuration. For example, the thruster of a UAV may be attached rigidly to it (i.e., nonvectoring) and spinning at an angular velocity ω with its spinning axis parallel to the x-axis of the UAV. In this case, the expression simplifies to

$$\begin{bmatrix} M_{\mathrm{gyro},x} \\ M_{\mathrm{gyro},y} \\ M_{\mathrm{gyro},z} \end{bmatrix} = \begin{bmatrix} p \\ q \\ r \end{bmatrix} \times \begin{bmatrix} J & 0 & 0 \\ 0 & I_{yy,t} & 0 \\ 0 & 0 & I_{zz,t} \end{bmatrix} \begin{bmatrix} \omega \\ 0 \\ 0 \end{bmatrix} = J\omega \begin{bmatrix} 0 \\ r \\ -q \end{bmatrix} \tag{10}$$

where $[p\ q\ r]^{\mathrm{T}}$ is the body rate vector of the UAV, and $[J\ I_{yy,t}\ I_{zz,t}]$ are the moments of inertia of the thruster about x, y, and z axes, respectively.

The inertia tensor I_t is the only parameter needed to completely define this model. The inputs are angular velocity vector $\boldsymbol{\omega}$ and rotation rate vector $\boldsymbol{\omega}_t$ of the thruster, and the output is the gyroscopic moment $\boldsymbol{M}_{\mathrm{gyro}}$.

F. Complete Thruster Model

The thruster model is a combination of the battery model—(1), BLDC motor model—(2) and (3), propeller model—(7) to (9), and gyroscopic moment model—(10), as shown in the schematic in Fig. 1. Implementation of the thruster model in Simulink is shown in Fig. 5.

The model is completed by incorporating a mapping function from PW to desired voltage. The desired voltage is input to the battery model which outputs armature voltage. The armature voltage and aerodynamic torque (from the propeller model) are inputs to the BLDC motor model which then outputs angular velocity and reaction torque. The angular velocity serves as an input to both the propeller and gyroscopic moment model. The propeller model, with an additional input of thruster's axial velocity, gives two outputs namely thrust and aerodynamic torque. Aerodynamic torque is fed back into the BLDC motor

Authorized licensed use limited to: Viet Nam National University Ho Chi Minh City. Downloaded on April 03,2026 at 09:44:21 UTC from IEEE Xplore. Restrictions apply.

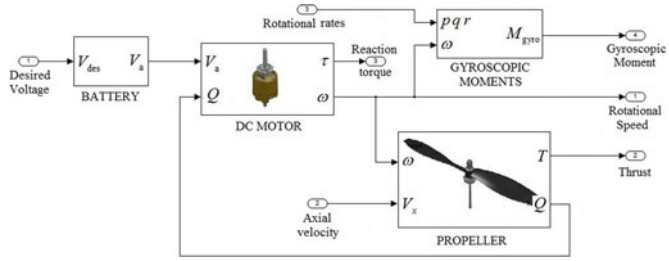

Fig. 5. Implementation of the complete thruster model in Simulink. Submodels for battery, dc motor, propeller, and the gyroscopic moments along with all inputs and outputs are shown.

model. The gyroscopic moment model, with an additional input of thruster rotational rate vector, outputs the gyroscopic moment.

The complete thruster model requires three inputs: PW to the thruster, axial velocity V_x, and rotational rate vector $\boldsymbol{\omega}_t$ of the thruster. Its outputs are: aerodynamic thrust T, reaction torque τ, and gyroscopic moment $\boldsymbol{M}_{\mathrm{gyro}}$.

III. Validation

A. Determination of System Parameters

In order to demonstrate the applicability of the proposed model, we now proceed to validate its results against experimental tests with the following hardware: a *Rimfire 400 outrunner* brushless motor, coupled to an *Electrifly Powerflow 10 × 4.5* propeller, with a *FlightPower EON-X Lite* Lithium polymer battery and an *Electrifly SilverSeries-25A* brushless ESC unit.

Each subsystem of the complete thruster model has its own set of parameters that must be identified prior to the validation.

1) Battery Parameters: The two parameters of the battery model z_b and p_b are determined from a simple battery discharge experiment in which the battery is used as a power source to run the Rimfire 400 motor and the armature voltage is logged.

The motor was run at low, medium, and high speeds representing different discharge rates of the battery. Armature voltage was observed to drop with the drop being negligible, moderate, and high for low, medium, and high speeds, respectively.

Since the battery model used here is unable to account for variable discharge rates, a reference discharge rate was chosen; similar to the approach by Gao *et al*. [11]; to evaluate battery parameters. A moderate discharge rate was referenced, shown in Fig. 6, because the test thruster normally operates near moderate speeds.

The armature voltage is seen to drop to 92.8% of its original value, for the moderate discharge rate, which represents the ratio z_b/p_b. The parameter $z_b = 0.40$ is found iteratively such that the simulated drop matches the experimental drop, resulting in $p_b = 0.431$.

2) BLDC Motor Parameters: The following parameters of the Rimfire 400 motor must be determined: armature resistance and inductance, velocity constant, torque constant, damping constant, and rotational inertia.

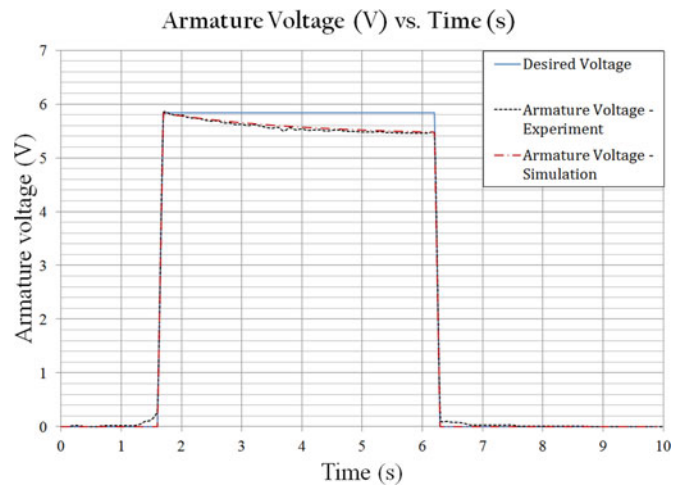

Fig. 6. Comparison between simulated and experimental armature voltage for a moderate battery discharge rate. The reference desired voltage is also shown.

Since a BLDC motor does not have carbon brushes or a commutator, its armature resistance R_a is simply the resistance measured at its terminals. Moreover, such motors are three-phase synchronous motors [21] for which the measured line-to-line resistance, between any two terminals, needs to be transformed into phase resistance using the relationship $R_{\mathrm{phase}} = R_{l-l}/2$. For the Rimfire 400, the line-to-line resistance is measured with an Ohmmeter to be 0.1 Ω and therefore, the armature resistance is calculated as $R_a = 0.05\ \Omega$.

The armature inductance L_a is difficult to measure directly. While an inductance (LCR) meter could be used, measured inductance can be significantly lower than the actual value for three-phase synchronous motors due to mutual magnetic coupling between its phases [22]. Therefore, alternative approaches for measuring inductance were investigated. One approach involves applying a low ac voltage to the motor and measuring its impedance and reactance and with these, the inductance can be calculated. Another approach, which is much simpler, makes use of the relation $L_a = \tau_e R_a$ to calculate inductance. Here, τ_e is the electrical time constant of the motor, i.e., the time taken for the armature current to reach 63.2% of its steady-state value. The Rimfire 400 motor was run at a moderate speed with a current sensor logging armature current. From the logged current data, τ_e was found to be 0.02 s from which L_a was calculated to be around 1×10^{-3} H.

Based on its definition, the velocity constant K_v can be expressed mathematically as $K_v = V_{\mathrm{back}}/\omega$. To find this parameter, the Rimfire 400 was mounted on a drill press and rotated at known speeds while measuring the generated back EMF at steady state. The measured back EMF is the line-to-line voltage and is first converted to phase voltage according to the relation $V_{\mathrm{phase}} = V_{l-l}/\sqrt{3}$, and then plotted against the angular velocity, as shown in Fig. 7. A linear fit through the data yields the velocity constant $K_v = 4.19 \times 10^{-3}$ V·s/rad, which is a little lower than the rated K_v specified by the manufacturer (5.81×10^{-3} V·s/rad). This is not surprising considering that the rated value is determined theoretically based on the motor design, and the true value will always be lower due to losses.

Authorized licensed use limited to: Viet Nam National University Ho Chi Minh City. Downloaded on April 03,2026 at 09:44:21 UTC from IEEE Xplore. Restrictions apply.

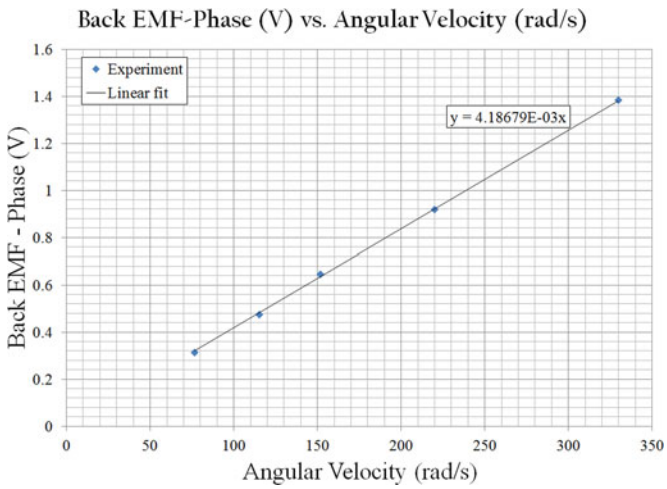

Fig. 7. Plot showing back EMF versus the angular velocity for the Rimfire 400 motor. Slope of the linear fit through the data gives the velocity constant.

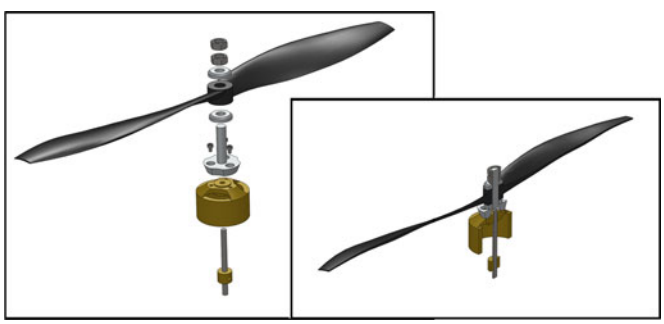

Fig. 8. CAD model of the test thruster in SolidWorks. Even the smallest components are modeled in order to determine rotational inertia accurately.

Under ideal conditions when there are no frictional or heat losses, the energy conservation on a BLDC motor requires that the mechanical power output must be equal to the electrical power input. This implies that the torque constant is equal to the velocity constant if measured in metric units [13], leading to $K_t = 4.19 \times 10^{-3}$ N·m/A.

The damping coefficient K_d of a BLDC motor is nominally due to viscous bearing friction and has a much smaller effect than other terms in the model. As such, it has been neglected here, as is normally done in most other works [23].

The rotational inertia J of the thruster is the polar moment of inertia, about its center of mass, of all components that rotate when the motor is running. To determine J accurately, all rotating parts of the test thruster were modeled in SolidWorks 2010, shown in Fig. 8. The rotational inertia, as evaluated by the CAD software, is 5.706×10^{-5} kg·m^2.

3) Propeller Parameters: The chord, chordline pitch angle, zero-lift angle of attack, 2-D lift curve slope, and 2-D drag coefficient can all be found as functions of radial location by slicing up the propeller into a number of segments. The Electrifly propeller was cut along the propeller blade span at locations $r = [5, 20, 40, 60, 80, 100, 127]$mm to give seven cross sections as shown in Fig. 9.

Fig. 9. Propeller sliced up into six segments (left) and a cross-sectional view of one of the segments (right).

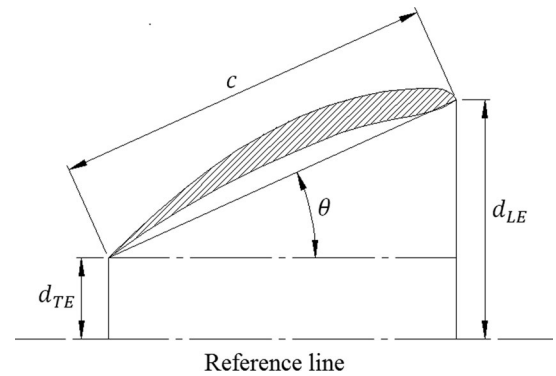

Fig. 10. Measuring the chordline pitch angle with the aid of vertical leading edge and trailing edge distances from a reference, and chord.

Chord c, max thickness ratio t_r, max thickness location x_t, max camber ratio $z_{\max}$, and maximum camber location x_z were measured directly for each of the cross sections.

To evaluate the chordline pitch angle θ, vertical leading edge and trailing edge distances were measured for each section from a fixed reference line as shown in Fig. 10. With the chord known, θ was found for each section using the relationship $\theta = \sin^{-1}((d_{LE} - d_{TE})/c)$.

The zero-lift angle of attack α_0 can be calculated using $\alpha_0 = -2z_{\max}$; an expression derived from the lift coefficient equation of a thin airfoil with circular arc camber line [20].

For simplicity, an average value of the lift curve slope a and drag coefficient C_d are used. This is done by first finding the mean thickness ratio and a mean camber ratio of all sections, which come out to be 6% and 5.58%, respectively. An Eppler-58 airfoil ($t_r = 5.6\%$ and $z_{\max} = 6.5\%$) is found to be the closest match for which the 2-D lift curve slope and 2-D drag coefficient, at a Reynolds number of 40 000, are found from [24] to be 6.28 and 0.02, respectively. It is evident from the aerodynamic curves for Eppler-58 that a and C_d are affected by Reynolds number especially at low Re values. Currently, this variation is not taken into account, because it would complicate the numerical solution.

Table I lists all propeller parameters as functions of radial location evaluated for the Electrifly propeller.

4) Mapping Function: As mentioned previously, a mapping function from PW to desired voltage V_{des} is required to complete the thruster model. It is determined from an experiment in which the ESC voltage output was measured and recorded for several PW inputs.

Authorized licensed use limited to: Viet Nam National University Ho Chi Minh City. Downloaded on April 03,2026 at 09:44:21 UTC from IEEE Xplore. Restrictions apply.

TABLE I
THRUSTER PROPELLER PARAMETERS

S. No.	Radial Location, r (mm)	Chord, c (mm)	Chordline pitch Angle, θ (deg)	Zero-lift angle of attack, α_0 (deg)	2D lift curve slope, a (rad^{-1})	2D drag coefficient, C_d
1	5	12.374	25.00	0		
2	20	16.230	26.50	0		
3	40	22.850	21.89	-9.66		
4	60	28.215	14.39	-8.70	6.28	0.02
5	80	28.902	9.80	-7.40		
6	100	26.310	4.75	-10.70		
7	127	13.066	6.59	-08.40		

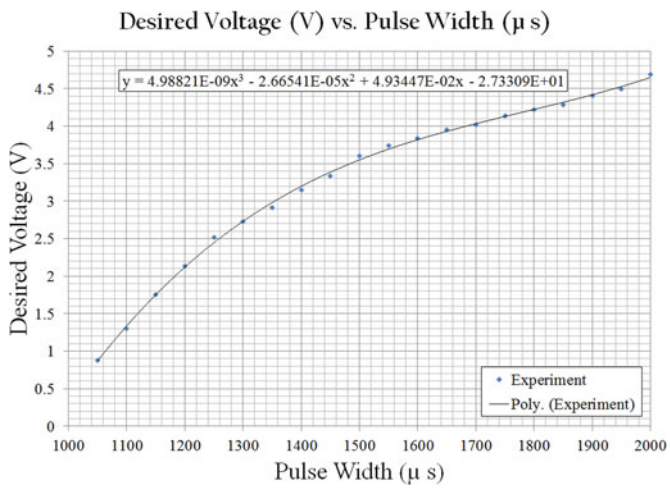

Fig. 11. Plot of desired voltage versus pulsewidth. A third order fit gives the mapping function between the two.

A third-order polynomial fit through the data, Fig. 11, gives the required mapping function

$$V_{\mathrm{des}} = 4.99\times10^{-9}P^3 - 2.66\times10^{-5}P^2 + 4.93\times10^{-2}P - 27.33$$

where P is the commanded PW signal in microseconds.

B. Description of Test Setup

A schematic of the experimental setup is shown in Fig. 12. The test thruster was mounted on a thrust stand firmly fastened to an ATI gamma force/torque (F/T) transducer. The ATI F/T sensor measures forces and torques in all three axes with a high resolution and sampling rate, and was interfaced with an ISA bus data acquisition card. An EagleTree Datalogger was used to log input commands, angular velocity, and battery voltage and current data.

A code was written to send an input command to an Arduino board while simultaneously starting the logging process to avoid time synchronization issues. A second code was uploaded to the Arduino board to send desired PW signals to the ESC on receiving command inputs from the PC.

In all experiments, an input command was sent from the PC and data logging started simultaneously. On receiving the command input, the Arduino board sent the desired PW signal to the ESC unit which then applied the desired armature voltage to the thruster. The F/T data were logged to the PC while the angular velocity, battery voltage, and current data were logged to a laptop.

The data obtained from the ATI sensor had noise owing to the thruster stand vibration and sensor noise. Fourier transforms were used to identify a desirable cut-off frequency. A third-order zero-phase Butterworth low-pass filter, with a cut-off frequency of 50 Hz, was applied to the logged data to remove measurement noise.

C. Steady-State Validation

Steady-state validation of the thruster model is done by comparing the simulated steady-state thrust and reaction torque against experimental results.

From Fig. 13, it is clear that steady-state thrust is proportional to the square of the angular velocity, which is in fact the basis of the simple steady-state thruster model used widely in UAV dynamic models.

Simulation and experimental results show excellent agreement especially at low angular velocities. At rotational speeds greater than 6000 rev/min, the simulation appears to consistently underpredict thrust by around 2–3% (with a maximum error of 4.7%). Simulations were also performed for another propeller: an *APC 10 × 4.7 SF*, and the results were compared to experiments done by Brandt and Selig [25]. Good correspondence was found between those experimental results and our simulation, with an rms difference of ∼5% in thrust.

Steady-state reaction torque is also plotted against the square of angular velocity in Fig. 13. The simulation results are in very good agreement with the experiments showing a maximum error of 7.6%.

D. Dynamic Validation

For thruster-dominated UAVs, dynamic behavior of the thruster can be very important particularly in transient maneuvers. Here the thruster model's dynamic response is validated, under stationary conditions, using step input response and random input response with experiments.

1) Step Signal Response: Several experiments were performed with different step PW inputs to the thruster. Simulations were run for the same step inputs and the results are compared in Fig. 14. As discussed previously, the collected data were noisy due to thruster stand vibrations. This can be observed, even after filtering, especially in the torque plots of Fig. 14. While additional filtering could be done, these plots seem satisfactory

Authorized licensed use limited to: Viet Nam National University Ho Chi Minh City. Downloaded on April 03,2026 at 09:44:21 UTC from IEEE Xplore. Restrictions apply.

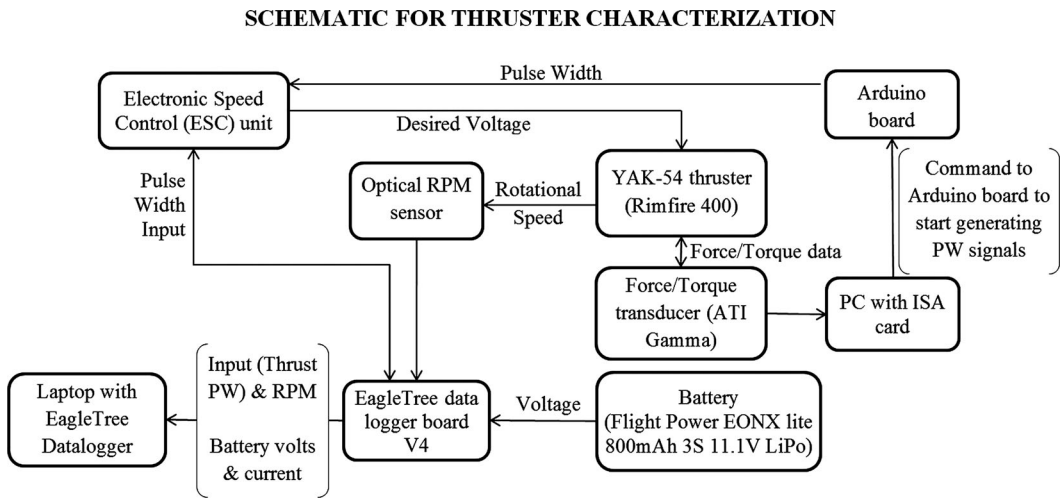

Fig. 12. Schematic of the experimental setup for thruster model validation.

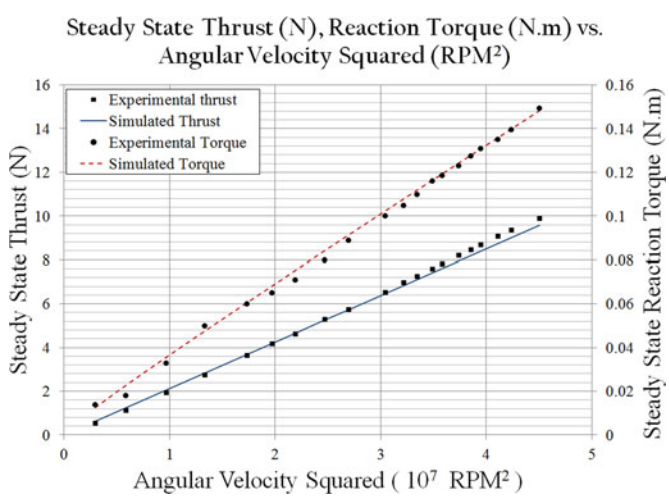

Fig. 13. Comparison of steady-state thrust, and reaction torque as functions of angular velocity squared, from simulations and experiments.

for the current purpose of validation. Future experiments will incorporate rubber pads between the thruster stand and the F/T sensor to damp out these vibrations.

The battery discharge phenomenon is visible in both simulated and experimental results. It is noted that at PW = 1100, experimental thrust does not show a noticeable drop while the simulated thrust shows a very slight drop, implying that the battery model overestimates armature voltage drop at low PWs. At PW = 1500, the simulation and experiment show approximately same drop in thrust indicating the battery model to be accurate at moderate PWs. At a higher PW of 2000, the experiment shows more drop in thrust in comparison to the simulation indicating that the battery model underestimates armature voltage drop at high PWs. This behavior is not surprising considering that the battery model is not able to account for variable discharge rates, as discussed previously.

Further, it is observed that the starting transient response of simulated thrust and reaction torque occur earlier than in the experiment, but exhibit the same shape. This is related to the fact that the motor was started from rest in all experiments. Under these conditions, the ESC appears to limit surge current, and consequently torque, on motor startup. Lack of torque, at startup, causes a deficiency in angular acceleration which then results in a delay in the rise of angular velocity and thrust. As a result, the starting transient response in thrust is delayed relative to the simulation.

The ending transients of simulated and experimental thrust and torque are also different, as shown in Fig. 14, where the simulated thrust drops quickly to zero while the experimental thrust shows a more gradual decrease. When the input is removed, the back EMF generated by the spinning rotor causes a reverse current in the armature which creates a negative torque that quickly slows down the motor. It is speculated that, in practice, the ESC limits this negative current, which prevents generation of a negative torque, thus leading to a more gradual drop of thrust.

The problems of motor startup/slowdown might be resolved with the use of programmable ESCs that are available on the market. These may be programmed to release the constraints on startup current and reverse current. However, introduction of additional programmable variables would further complicate the dynamic model, and thus a programmable ESC was not used in the present work.

To validate the thruster model without startup effects, a second set of experiments was performed in which the motor was started from rest and run at moderate speed (PW = 1500); then slowed down to the lowest possible speed (PW = 1050); and then speeding it up once again (PW = 1500) before finally bringing it to a complete stop. Simulations were run for the same conditions and the results obtained are compared with experiments shown in Fig. 15.

The delay in startup torque only exists when the motor starts from rest. In the second acceleration at $\sim$t = 5 s, the simulated thrust matches closely with the experiment. The ending transients in the thrust/torque curves remain unchanged and a dynamic model for the ESC would have to be incorporated to rectify this. However, even without such a model, the thruster

Authorized licensed use limited to: Viet Nam National University Ho Chi Minh City. Downloaded on April 03,2026 at 09:44:21 UTC from IEEE Xplore. Restrictions apply.

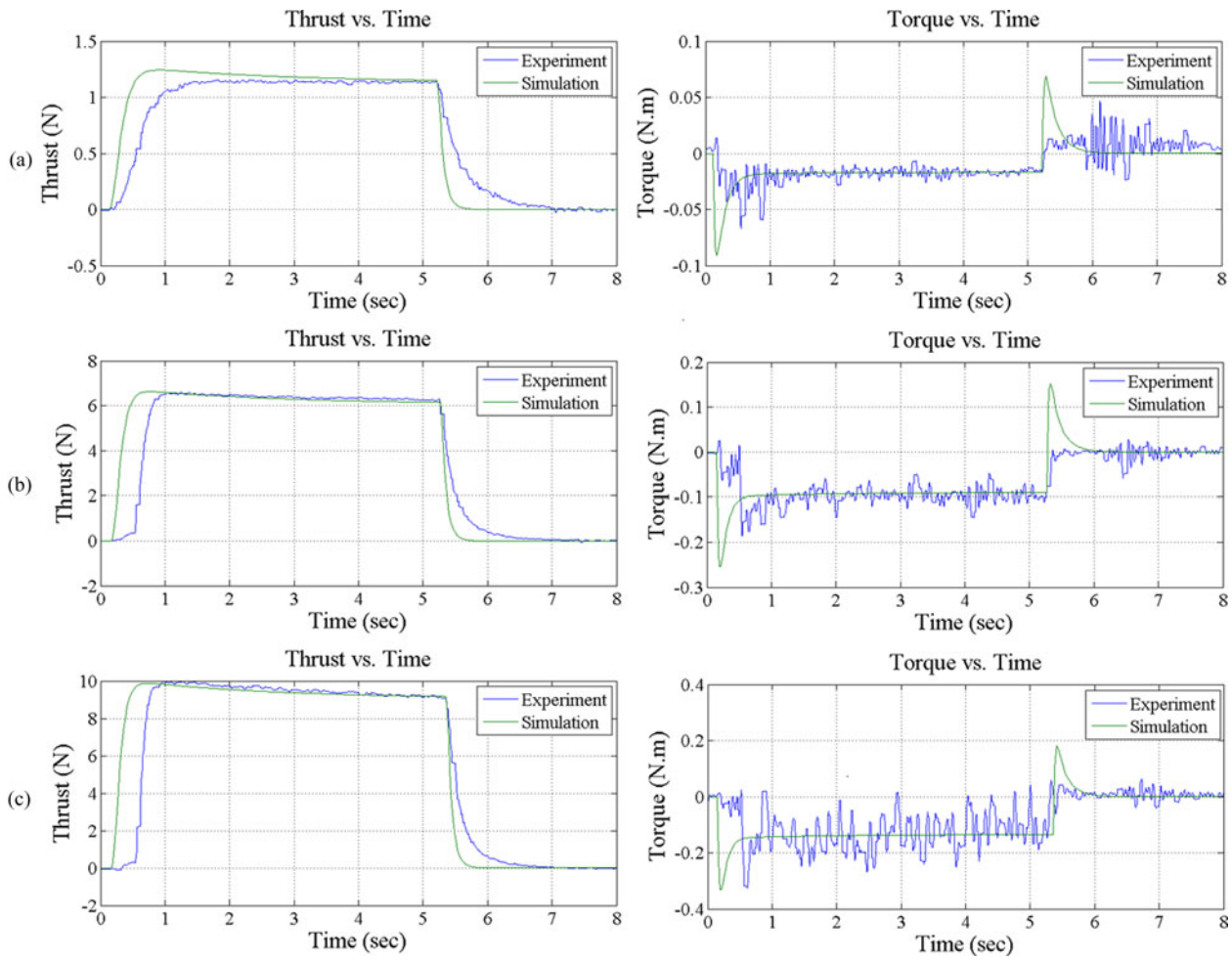

Fig. 14. Simulated versus experimentally measured thrust and torque for (a) low PW = 1100 (b) moderate PW = 1500 and (c) high PW = 2000.

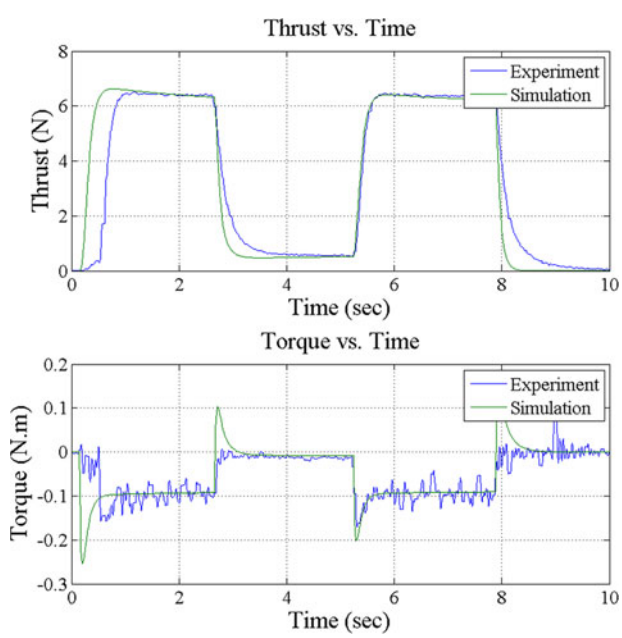

Fig. 15. Simulated versus experimentally measured thrust and torque for an idling test. Input was varied from PW=1500 to PW=1050, and then back to PW = 1500.

model predicts the dynamic behavior well once the motor has started as seen from Fig. 15.

2) Random Signal Response: Step inputs are unlikely to occur during actual flights where the input would be changing randomly and rapidly. Therefore, the model is validated with random inputs. A random PW signal, recorded during an actual flight, serves as input to the model and to the thruster on the test stand. The resulting thrust and torque responses of the simulation and experiment are compared in Fig. 16.

The simulated thrust and reaction torque are in very good agreement with experimental results. Initially, the simulated thrust matches closely with that obtained in experiment. As time passes, the simulated result starts to diverge; with the simulated thrust always being higher than the experimental thrust. For example, at $t = 30$ s, the simulated thrust is 5.42 N while the experimental thrust is 5.53 N, corresponding to an underprediction of $\sim$2%; while at $t = 60$ s, the simulated thrust is 5.63 N while the experimental thrust is 5.46 N, giving an overprediction of $\sim$3%. This increasing discrepancy with time is attributed to the fact that the battery model does not have the ability to model capacity fading effects, temperature-dependent effects, etc., which become important with time.

Authorized licensed use limited to: Viet Nam National University Ho Chi Minh City. Downloaded on April 03,2026 at 09:44:21 UTC from IEEE Xplore. Restrictions apply.

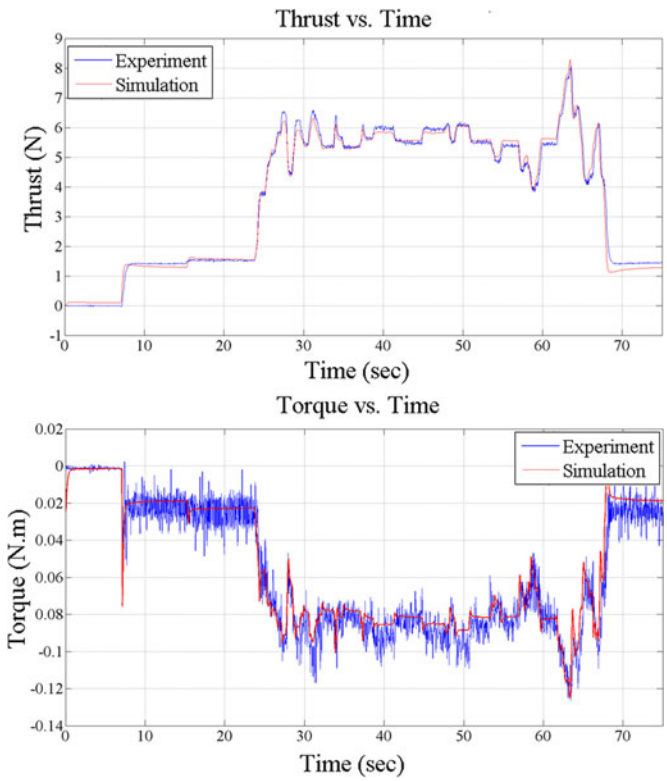

Fig. 16. Simulated versus experimentally measured thrust and torque for a random input recorded during an actual flight test.

E. Validation for Axial Flow Condition

Thrust and reaction torque produced are highly affected by the forward speed of the thruster; so much that they may drop to zero at high forward speeds. In this section, thrust and reaction torque results, as predicted by the thruster model under forward velocity, are presented. Experimental results from wind tunnel tests of the thruster would have been the most suitable way to validate simulation results. However, it was not feasible to perform experiments in a wind tunnel. Instead, the simulation results are compared qualitatively with experimental results from other works.

To avoid plotting a series of curves for axial flow conditions, pertaining to all possible combinations of forward speed and angular velocity, it is more suitable to nondimensionalize forward velocity in terms of the advance ratio $J_A = V_x/(nD)$, thrust in terms of the thrust coefficient $C_T = T/(\rho n^2 D^4)$, and torque in terms of a torque coefficient $C_Q = Q/(\rho n^2 D^5)$, where $n = \omega/(2\pi)$ and $D = 2R_p$.

Several simulations were performed with varying advance ratio (forward speed). Fig. 17 shows simulation results for variation of thrust coefficient and torque coefficient with the propeller's advance ratio.

The result is consistent with other works such as [5], [20], and [25], which show a similar quadratic drop of C_T with advance ratio J_A. Amini and Steen [26] also shows a drop of the torque coefficient with advance ratio, similar to the one shown in Fig. 17. It must be realized again that the effect of forward speed on thrust is severe. As an example, for an angular velocity

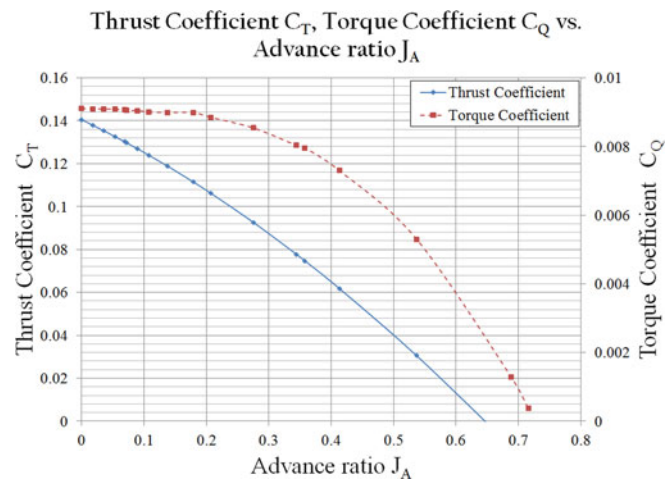

Fig. 17. Drop of thrust coefficient, torque coefficient with advance ratio.

of 690 rad/s, the thrust is reduced from 8.67 to 4.61 N as forward speed increases from 0 to 10 m/s. The thruster model presented here takes into account this effect and predicts the thrust drop effectively.

IV. Conclusion

A physics-based thruster model, capable of incorporating forward flow, has been presented. The model is completely defined by physically measurable parameters. All necessary experiments for the evaluation of these parameters were described.

The model is validated with a test thruster. Steady-state thrust and reaction torque values are compared with experiments and are found to be in very good agreement. Dynamic behavior, for both step and random inputs, is seen to be predicted reasonably well. The thruster model also gives consistent results under axial flow conditions.

The key advantage of the thruster model presented here is that it does not require testing to identify thruster characteristics—it is solely based on the governing physics and the parameter identification in Section III-A. The validation tests performed here were performed only to prove the validity of the model. Beyond this, the model captures the important performance changes that occur as the forward speed of the incoming flow into the thruster is increased. Future work should include more detailed models of the battery and ESC, as well as a consideration of oblique flows impinging on the propeller.

References

[1] M. Battipede, M. Lando, and P. Gili, "Mathematical modelling of an innovative unmanned airship for its control law design," *IFIP Syst., Control, Model. Optim.*, vol. 202, pp. 31–42, 2006.

[2] T. Hamel, R. Mahony, R. Lozano, and J. Ostrowski, "Dynamic modelling and configuration stabilization for an X4-flyer," in *Proc. Int. Fed. Autom. Control Symp.*, Barcelona, Spain, 2002, p. 846.

[3] P. Pounds, R. Mahony, and P. Corke, "Towards dynamically-favourable quad-rotor aerial robots," presented at the Australasian Conf. Robotics and Automation, Auckland, New Zealand, 2004.

[4] P. Pounds, R. Mahony, and P. Corke, "Modelling and control of a quad-rotor robot," presented at the Australasian Conf. Robotics and Automation, Auckland, New Zealand, 2006.

[5] R. W. Prouty, *Helicopter Performance, Stability and Control*, 1st ed. Malabar, FL, USA: Krieger, 2002.

Authorized licensed use limited to: Viet Nam National University Ho Chi Minh City. Downloaded on April 03,2026 at 09:44:21 UTC from IEEE Xplore. Restrictions apply.

[6] P. Pounds, R. Mahony, and P. Corke, "Modelling and control of a large quadrotor robot," *Control Eng. Pract.*, vol. 18, pp. 691–699, 2010.
[7] Y. Naidoo, R. Stopforth, and G. Bright, "Quad-rotor unmanned aerial vehicle helicopter modelling and control," *Int. J. Adv. Robot. Syst.*, vol. 8, no. 4, pp. 139–149, 2011.
[8] P. Pounds, R. Mahony, and P. Corke, "Design of a static thruster for microair vehicle rotorcraft," *J. Aerosp. Eng.*, vol. 22, no. 1, pp. 85–94, 2009.
[9] P. Peddiraju, "Development and validation of a dynamics model for an unmanned finless airship," M.Eng. thesis, Dept. Mech. Eng., McGill Univ., Montreal, QC, Canada, 2010.
[10] A. J. Healey, S. M. Rock, S. Cody, D. Miles, and J. P. Brown, "Toward an improved understanding of thruster dynamics for underwater vehicles," *IEEE J. Ocean. Eng.*, vol. 20, no. 4, pp. 354–361, Oct. 1995.
[11] L. Gao, S. Liu, and R. A. Dougal, "Dynamic lithium-ion battery model for system simulation," *IEEE Trans. Compon. Packag. Technol.*, vol. 23, no. 3, pp. 495–505, 2002.
[12] O. Erdinc, B. Vural, and M. Uzunoglu, "A dynamic lithium-ion battery model considering the effects of temperature and capacity fading," in *Proc. IEEE Int. Conf. Clean Electr. Power*, New York, NY, USA, 2009, pp. 383–386.
[13] M. McClure, "A simplified approach to DC motor modeling for dynamic stability analysis," Texas Instruments, Dallas, Texas, Appl. Rep. SLUA076, Jul. 2000.
[14] A. S. O. Al-Mashakbeh, "Proportional integral and derivative control of brushless DC motor," *Eur. J. Sci. Res.*, vol. 35, no. 2, pp. 198–203, 2009.
[15] M. O. Ali, S. P. Koh, and K. H. Chong, "Design a PID controller of BLDC motor by using hybrid genetic-immune," *Modern Appl. Sci.*, vol. 5, no. 1, pp. 75–85, 2011.
[16] J. G. Leishman, *Principles of Helicopter Aerodynamics*, 2nd ed. New York, NY, USA: Cambridge Univ. Press, 2006.
[17] R. Mikkelsen, J. N. Sorensen, and W. Z. Shen, "Modelling and analysis of the flow field around a coned rotor," *Wind Energy*, vol. 4, pp. 121–135, 2001.
[18] A. M. Khan, D. O. Adams, V. Dayal, and J. M. Vogel, "Effect of bend-twist coupling on composite propeller performance," *Mech. Compos. Mater. Struct.*, vol. 7, pp. 383–401, 2000.
[19] Y. J. Lee and C. C. Lin, "Optimized design of composite propeller," *Mech. Adv. Mater. Struct.*, vol. 11, pp. 17–30, 2004.
[20] B. W. McCormick, *Aerodynamics, Aeronautics, and Flight Mechanics*, 2nd ed. New York, NY, USA: Wiley, 1995.
[21] P. Yedamale, "Brushless DC motor fundamentals," MicroChip Technology, Inc., Tech. Rep. AN885, 2003.
[22] W. L. Soong, *Inductance Measurements for Synchronous Machines*, *Power Engineering Briefing Note Series*, Adelaide, Australia: Univ. Adelaide, May 2008.
[23] P. C. Krause, O. Wasynczuk, and S. D. Sudhoff, *Analysis of Electric Machinery and Drive Systems* (Series on Power Engineering) 3rd ed., vol. 75. New York, NY, USA: IEEE Press, 2013.
[24] (2012, Sep.). Airfoil Investigation Database. [Online]. Available: http://www.worldofkrauss.com/foils/532
[25] J. B. Brandt and M. S. Selig, "Propeller performance data at low Reynolds numbers," in *Proc. 49th AIAA Aerosp. Sci. Meeting*, Jan. 2011, pp. 2011–1255.
[26] H. Amini and S. Steen, "Experimental and theoretical analysis of propeller shaft loads in oblique inflow," *J. Ship Res.*, vol. 55, no. 4, pp. 268–288, 2011.

Waqas Khan received the B.Eng. degree in mechanical engineering from NED University of Engineering and Technology, Karachi, Pakistan, in 2008. He is currently working toward the Ph.D. degree at McGill University, Montreal, QC, Canada.

From 2008 to 2010, he was an Assistant Manager in the Design and Development Division at the Space Upper Atmosphere Research Commission, Pakistan. His research interests include the area of dynamics and control of mechanical systems, with a focus on aerospace applications.

Meyer Nahon (M'90–SM'93) received the B.A.Sc. degree in mechanical engineering from Queen's University, Kingston, ON, Canada, the M.A.Sc. degree in aerospace engineering from the University of Toronto, Toronto, ON, Canada, and the Ph.D. degree in mechanical engineering from McGill University, Montreal, QC, Canada.

He was a Faculty Member in the Department of Mechanical Engineering at the University of Victoria, Victoria, BC, Canada, from 1991 to 2001. Since then, has been with McGill University, presently as a Professor of mechanical engineering. His research interests include various aspects of dynamics and control of aerial and marine vehicles and systems, with a particular emphasis on tethered systems.

Prof. Nahon is an Associate Fellow of the AIAA and a Fellow of the Canadian Aeronautics and Space Institute (CASI). He has received awards from the AIAA and CASI for his work on flight simulator motion systems and on space-based robotics.

Authorized licensed use limited to: Viet Nam National University Ho Chi Minh City. Downloaded on April 03,2026 at 09:44:21 UTC from IEEE Xplore. Restrictions apply.