DIGITAL SYSTEMS

DESIGN AND VERIFICATION

COMMUNICATION PROTOCOLS

Serial

- I2C
- SPI
- CAN
- USB
- UART

Parallel

- PCI
- SCSI
- IEEE…

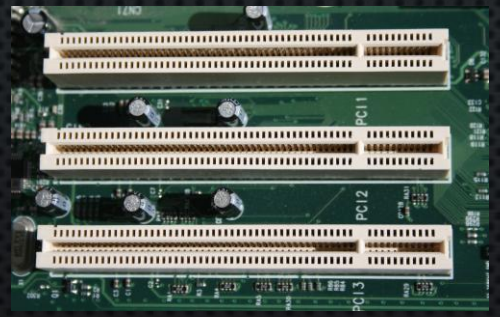

SPI

Characteristics:

- **Synchronous:** Master provides a dedicated Clock signal (SCLK).
- **Wires:** 4 (SCLK, MOSI, MISO, CS/SS)
- **Topology:** Single Master, Multiple Slaves (Selected via Chip Select pin)
- **Speed:** Extremely fast (up to tens of MHz)
- Full-Duplex

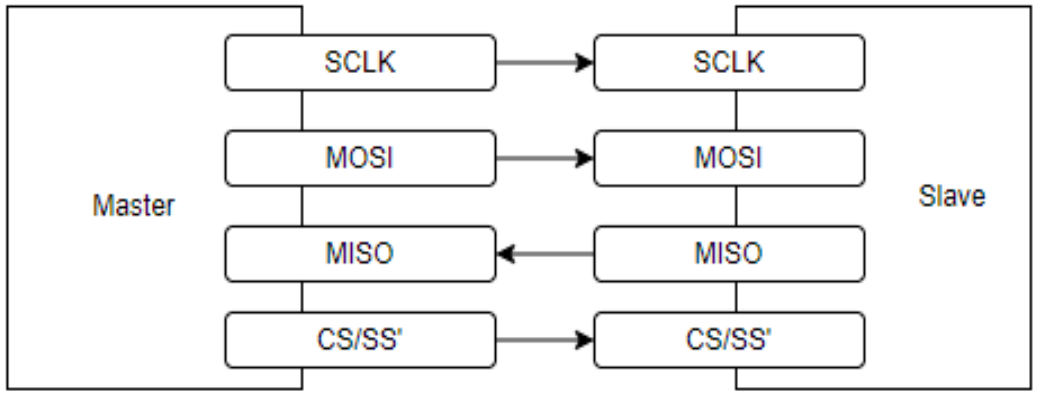

I2C

Characteristics:

- **Synchronous:** Shared Clock line (SCL)
- **Wires:** 2 (SDA for data, SCL for clock)
- **Topology:** Multi-Master, Multi-Slave (Devices are selected via a 7-bit Address)
- **Speed:** Slower (Standard 100 kHz, Fast 400 kHz)
- Half-Duplex

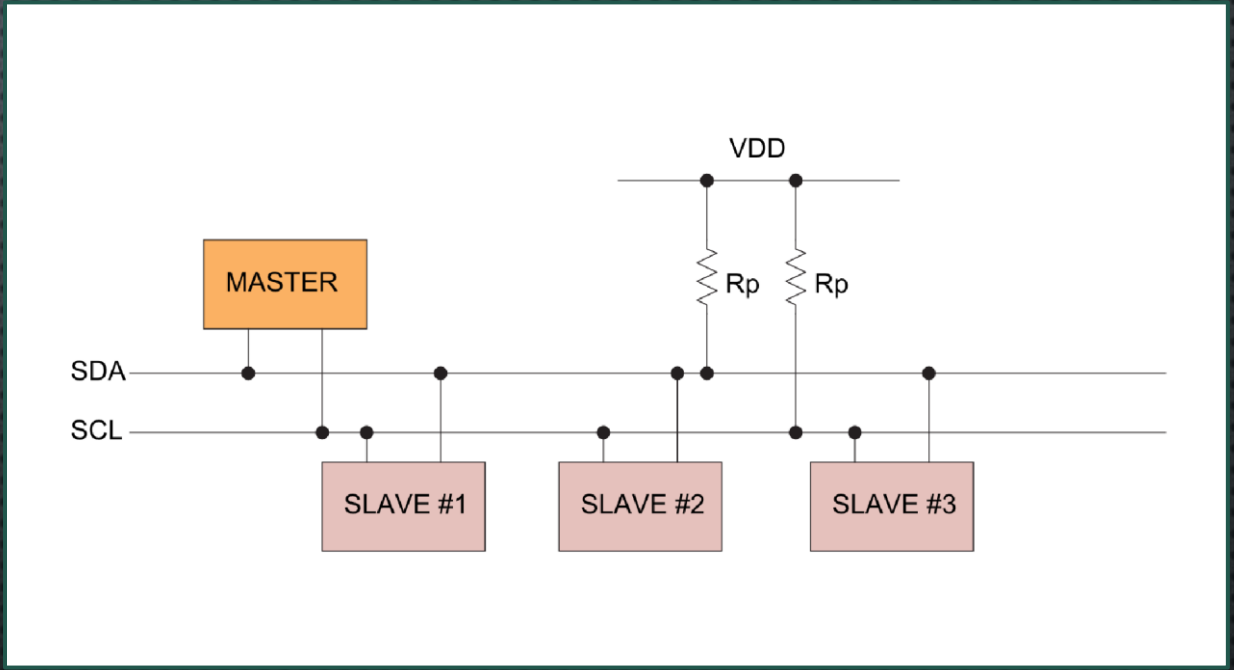

UART

Characteristics:

- **Asynchronous:** No shared clock signal between devices
- **Wires:** 2 (TX and RX) + Ground
- Devices MUST agree on Baud Rate beforehand.
- Full-Duplex

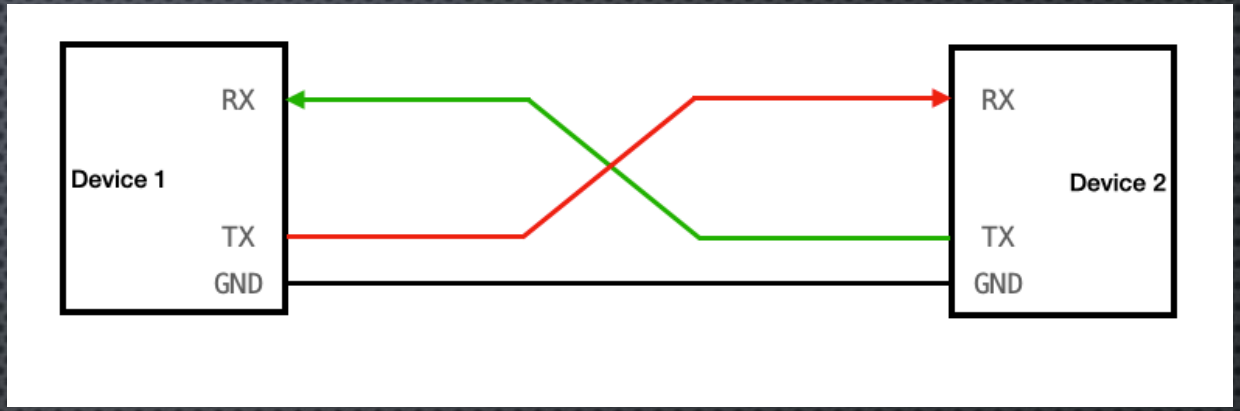

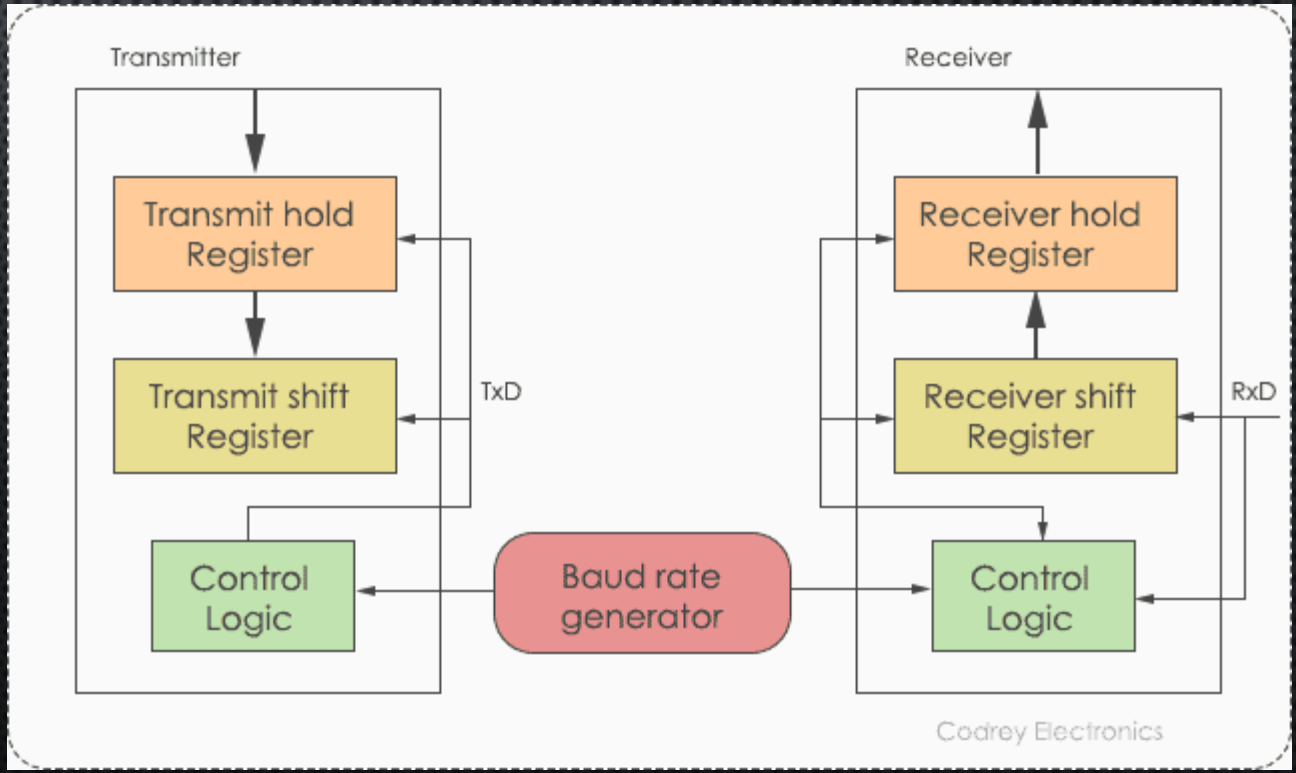

UART - FRAME

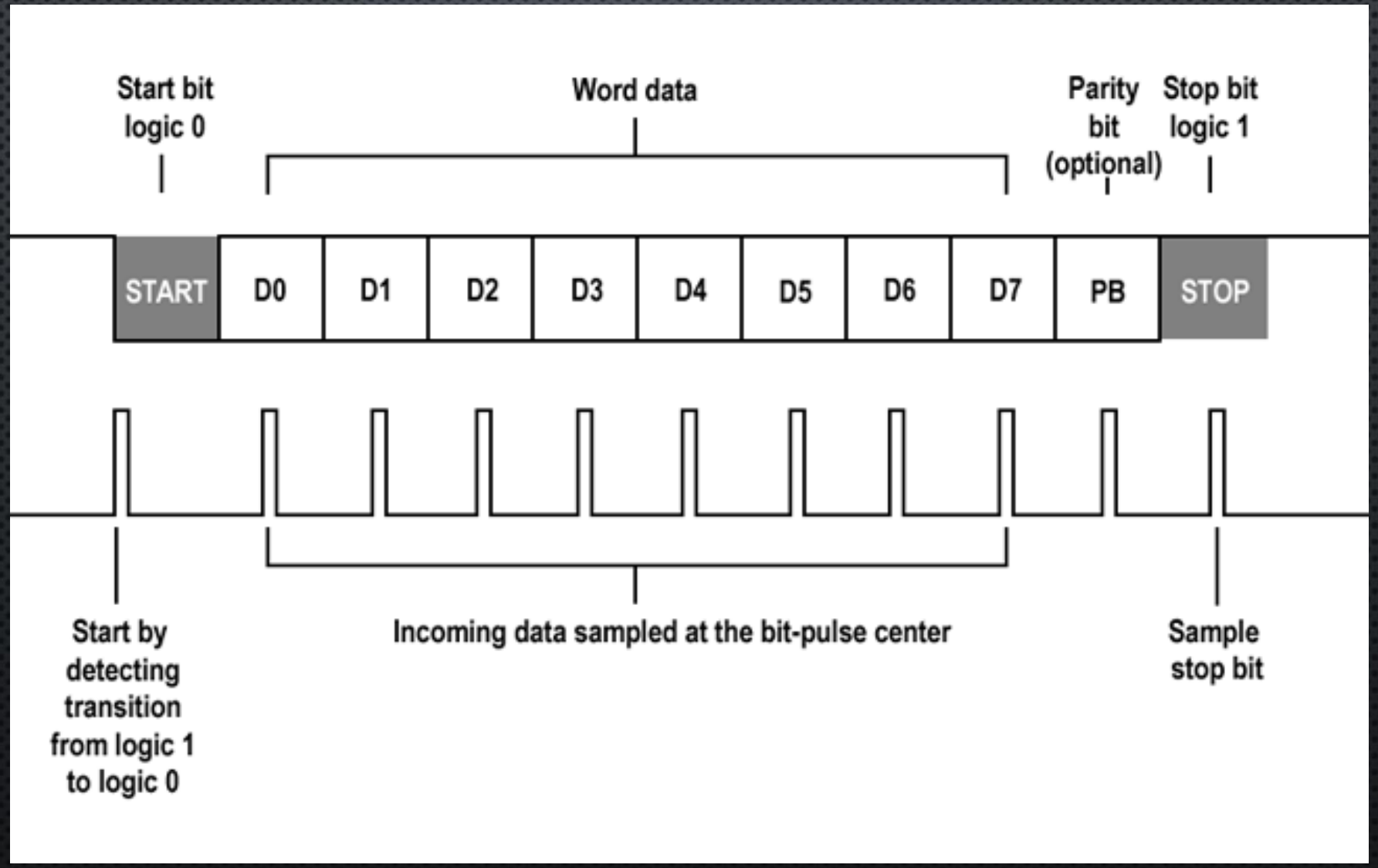
Start bit
logic 0
Word data
Parity
bit
(optional)
Stop bit
logic 1
START
D0
D1
D2
D3
D4
D5
D6
D7
PB
STOP
Start by
detecting
transition
from logic 1
to logic 0
Incoming data sampled at the bit-pulse center
Sample
stop bit

UART - TRANSMITTER

Baud Rate Generator

- 50 Mhz to desired baud rate

Shift Register

- Push data out bit x bit

Hold Reg

- Buffer to store 8 incoming bits

FSM

- Finite State Machine:
  - IDLE
  - START
  - DATA
  - STOP

Double Buffering

UART - RECEIVER

Baud Rate Generator

- 50 Mhz to desired baud rate

Hold Reg

- Buffer to store 8 incoming bits

Hold Reg

- Buffer to store 8 incoming bits

FSM

- Finite State Machine:
  - IDLE
  - START
  - DATA
  - STOP

Double Buffering

FSM – RECEIVER DIAGRAM

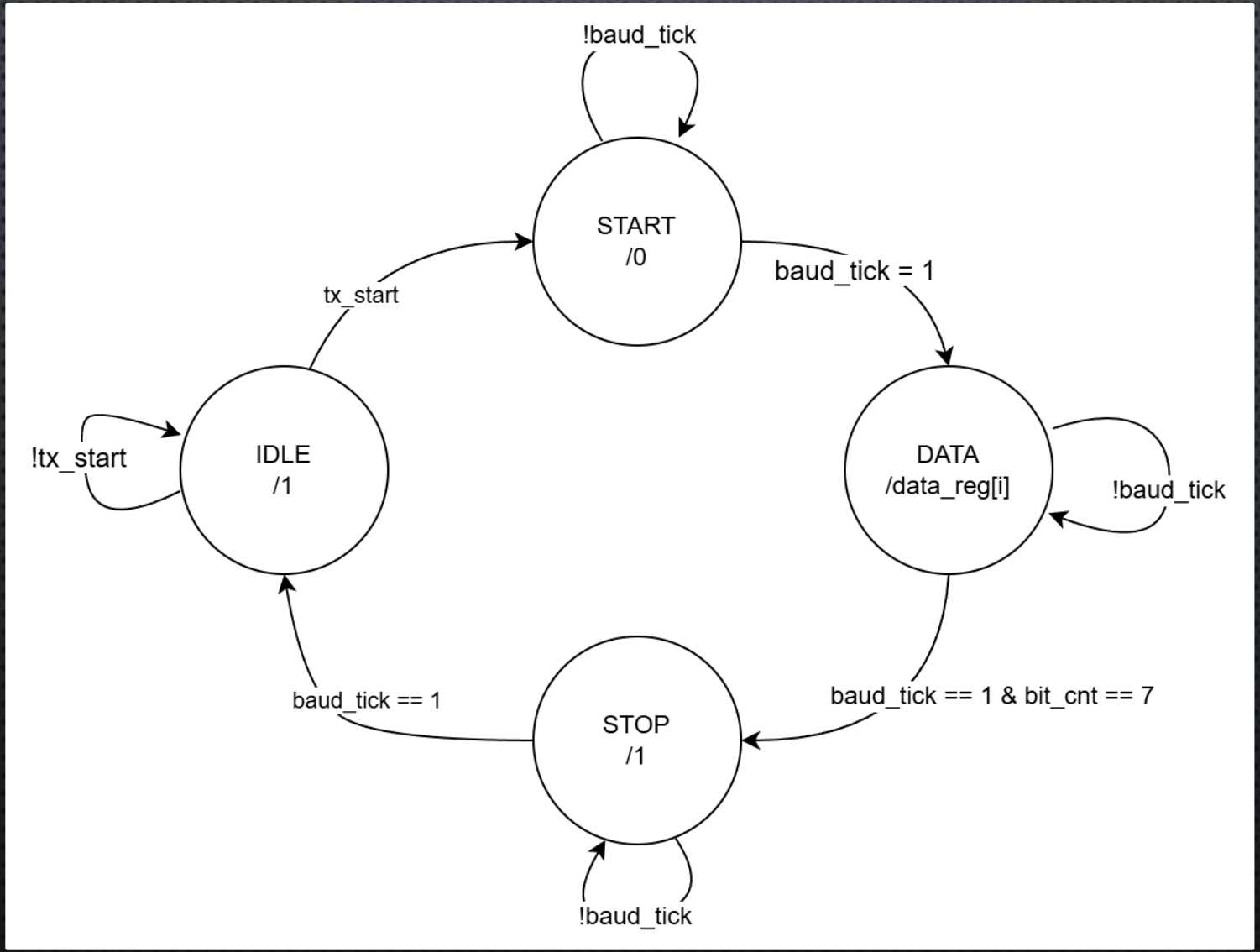

LIVE CODING !!!