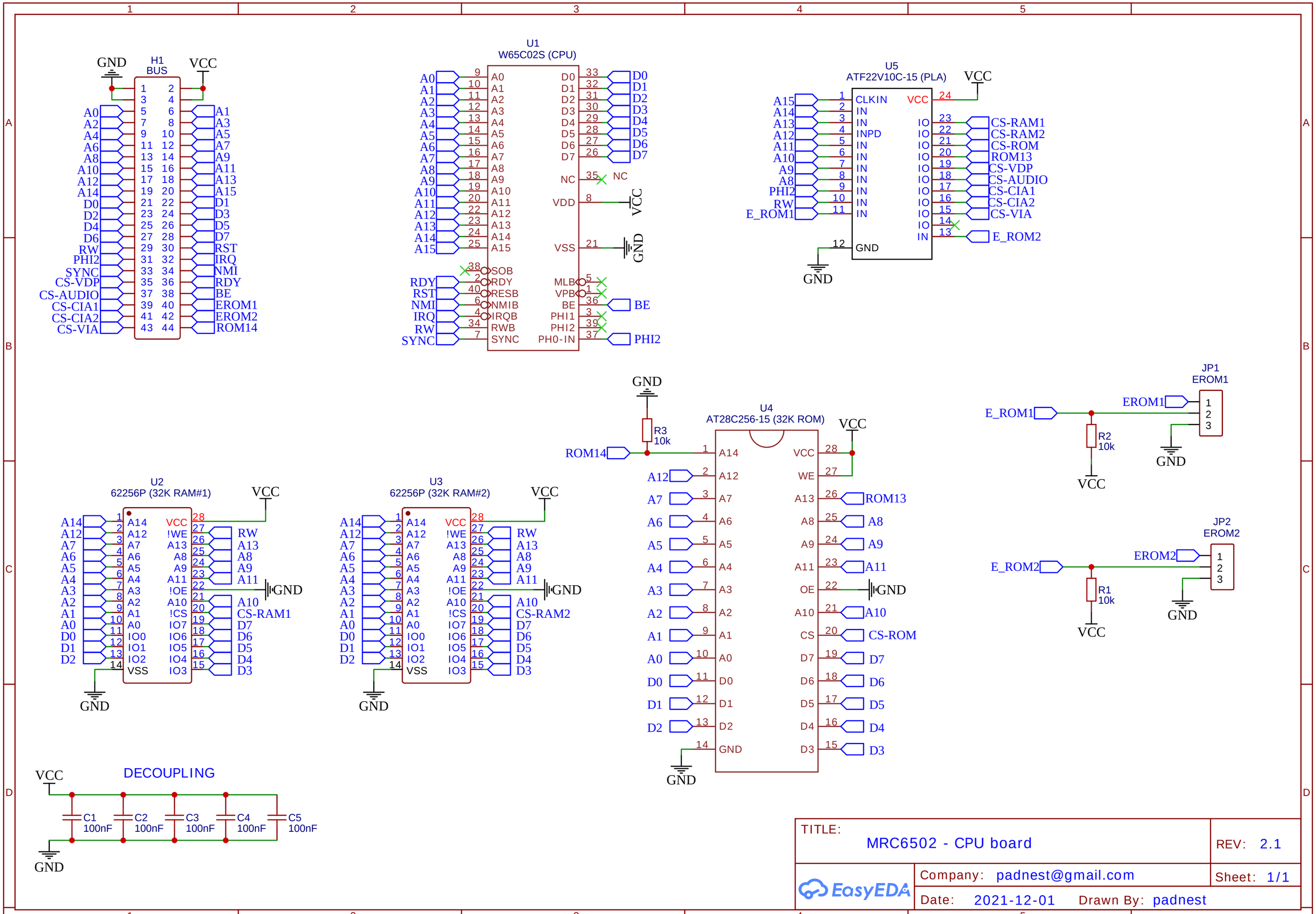
H1
BUS
GND
VCC
U1
W65C02S (CPU)
U5
ATF22V10C-15 (PLA)
U2
62256P (32K RAM#1)
U3
62256P (32K RAM#2)
U4
AT28C256-15 (32K ROM)
R3
10k
R2
10k
R1
10k
JP1
EROM1
JP2
EROM2
DECOUPLING
C1
100nF
C2
100nF
C3
100nF
C4
100nF
C5
100nF
TITLE:
MRC6502 - CPU board
REV: 2.1
Company: padnest@gmail.com
Sheet: 1/1
Date: 2021-12-01
Drawn By: padnest
EasyEDA