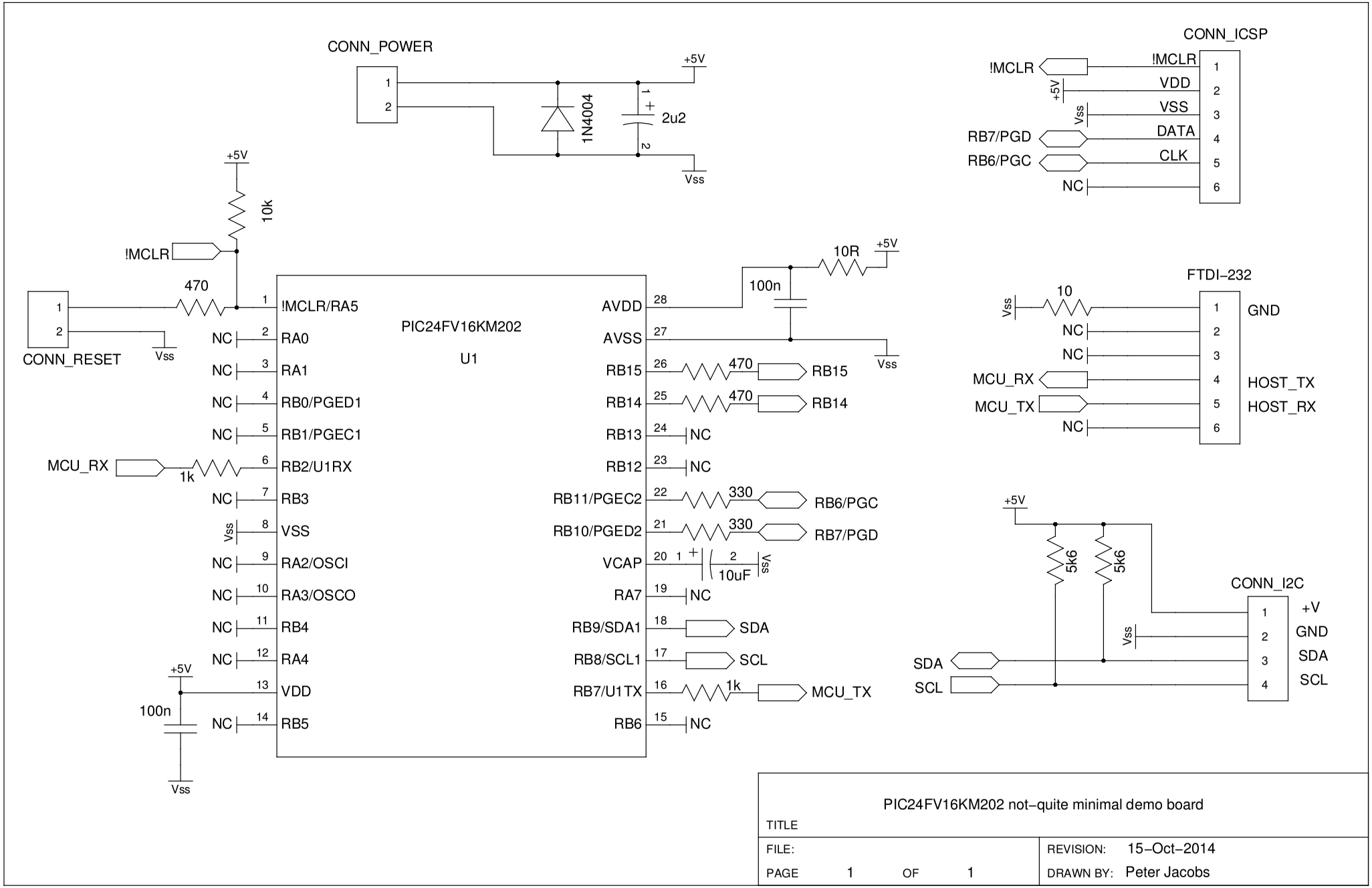

TITLE	PIC24FV16KM202 not-quite minimal demo board
FILE:	REVISION: 15-Oct-2014
PAGE 1 OF 1	DRAWN BY: Peter Jacobs