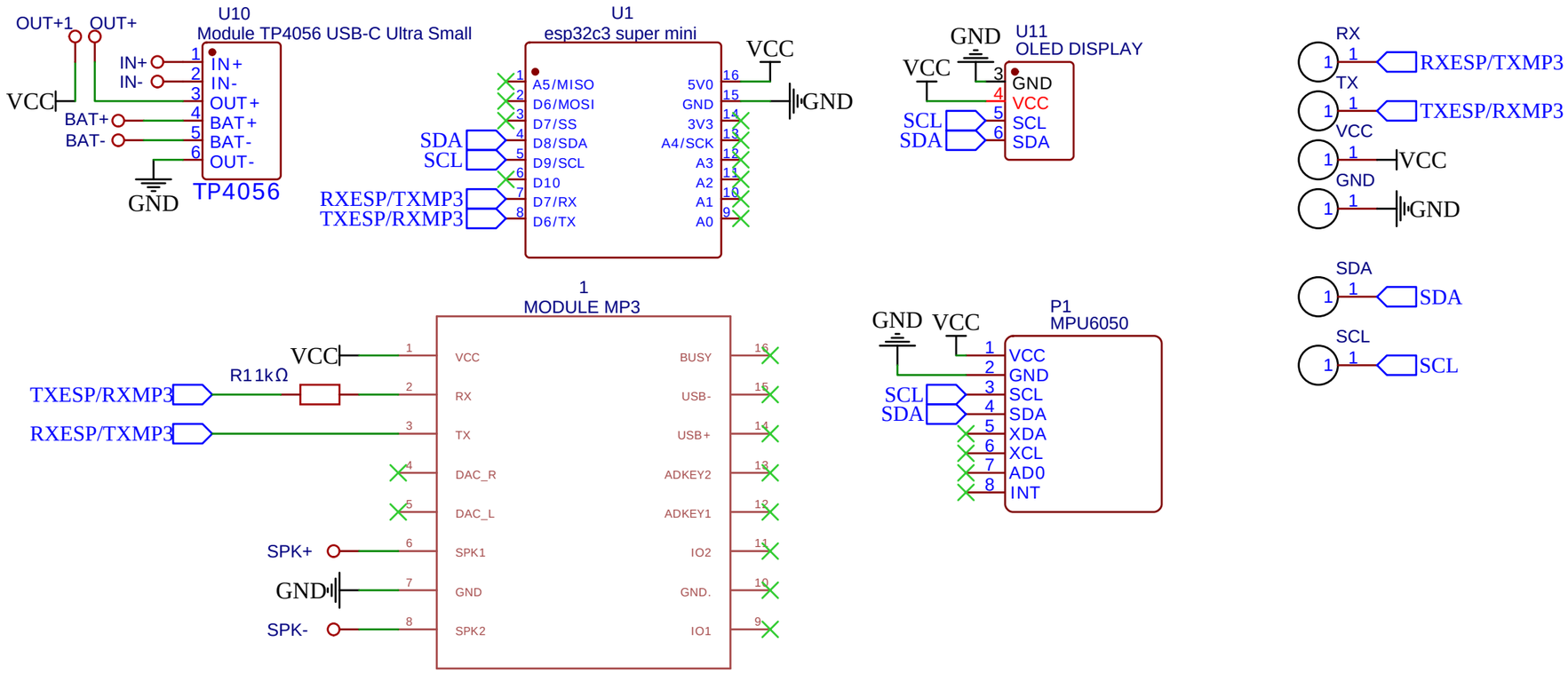

TITLE: Sheet_1		REV: 1.0
EasyEDA	Company: PROJECT PAJRI	Sheet: 1/1
	Date: 2025-05-09 Drawn By: Fazri	