levers: experiment 1

Setup the following levers and fulcrum (at the centre) to balance _____ kg. Which lever size uses the least effort:

1.

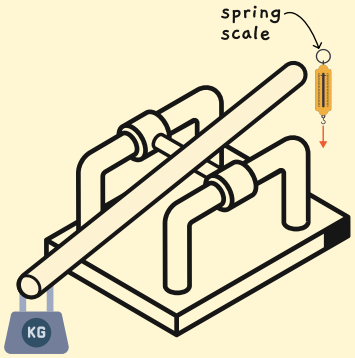

short 1 pipe

2.

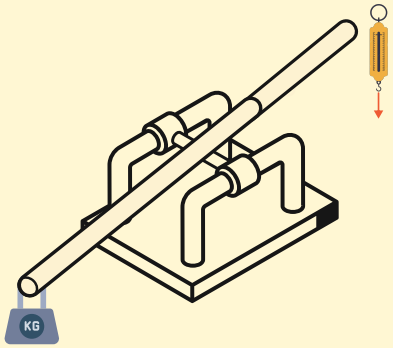

medium 2 pipes

3.

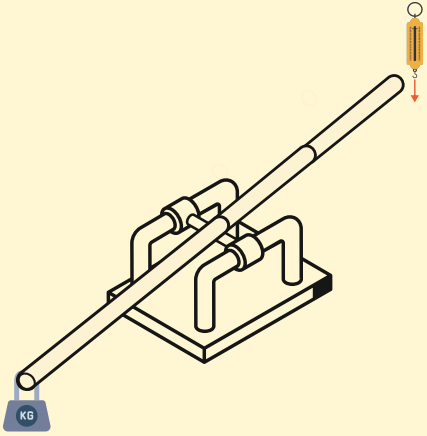

long 3 pipes

observation

measure the effort for each lever used:

	lever	effort
1.	short	
2.	medium	
3.	long	

which lever size uses the least effort:

result tick the correct answer

shorter / longer the **lever size** more / lesser the **effort**

levers: experiment 2

Lift 0.5kg, 1kg, 1.5kg by using a lever and a fulcrum at the center to find out which uses the most effort

medium 2 pipes

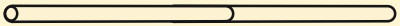

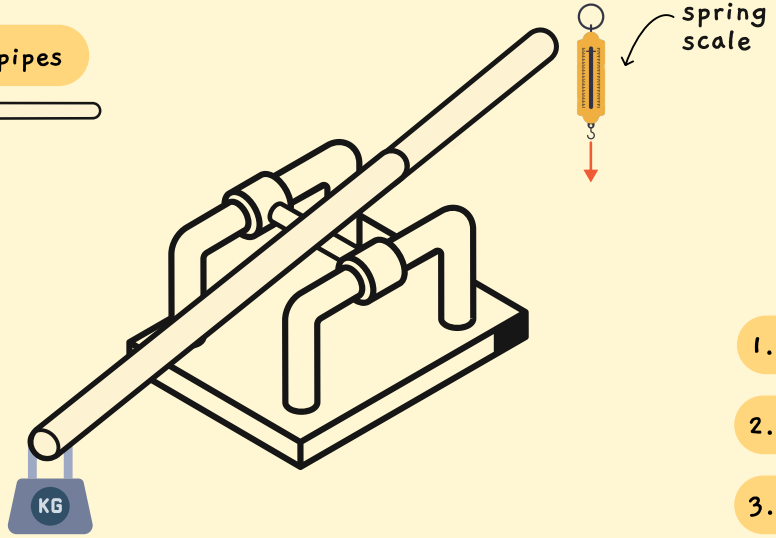

1. 0.5 kg
2. 1 kg
3. 1.5 kg

observation

measure the effort for each KG used:

	KG	effort
1.	0.5kg	
2.	1kg	
3.	1.5kg	

which weight uses the most effort:

result tick the correct answer

heavier / lighter the **weight**, more / lesser the **effort**

levers: experiment 3

Build a see-saw by adding 2 different KG on each end of the lever
1) 1kg vs 0.5kg 2) 1kg vs 2kg 3) 0.5kg vs 0.5kg
and observe how the lever moves for each.

medium 2 pipes

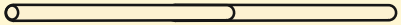

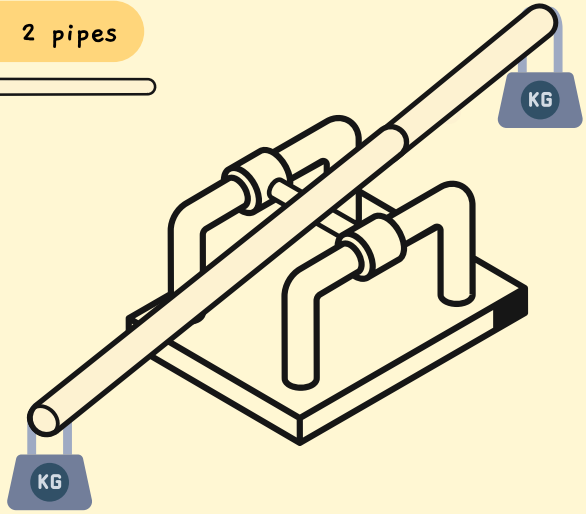

KG

1. 1kg vs 0.5kg
2. 1kg vs 2kg
3. 0.5kg vs 0.5kg

observation

draw the lever position you observed in each setup

1. 1kg vs 0.5kg	2. 1kg vs 2kg	3. 0.5kg vs 0.5kg
fulcrum	fulcrum	fulcrum

which setup is evenly balanced:

levers: experiment 4

Use a lever and fulcrum at the center to balance :
0.5 kg, 1 kg and 1.5 kg by balancing it against different objects you can find

medium 2 pipes

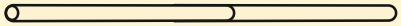

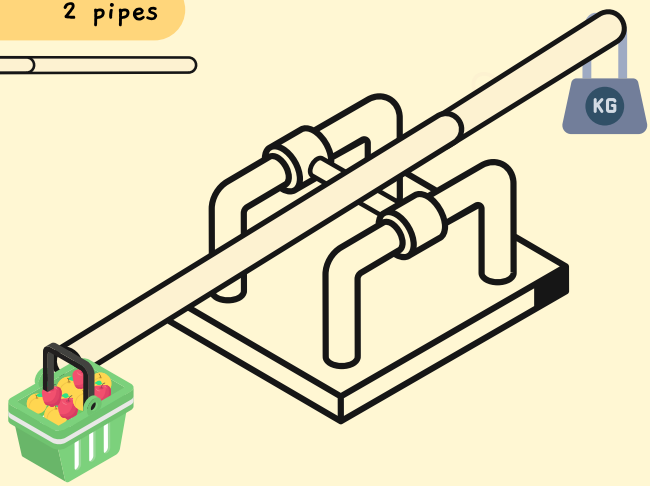

1. 0.5kg
2. 1 kg
3. 1.5 kg

observation

mention the objects that evenly balanced against each:

	KG	objects used
1.	0.5 kg	
2.	1 kg	
3.	1.5 kg	

tick the right answer

to evenly balance both sides, the KG must be:

equal / unequal