levers: experiment 1

Compare the effort needed to lift (1kg, 1.5kg, 2kg)

- Setup A : Lift them directly using a spring scale
- Setup B :Lifting them with a lever with medium length and fulcrum at the centre.

1.

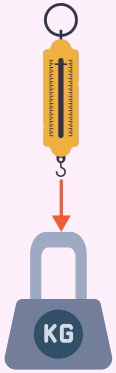

setup A

2.

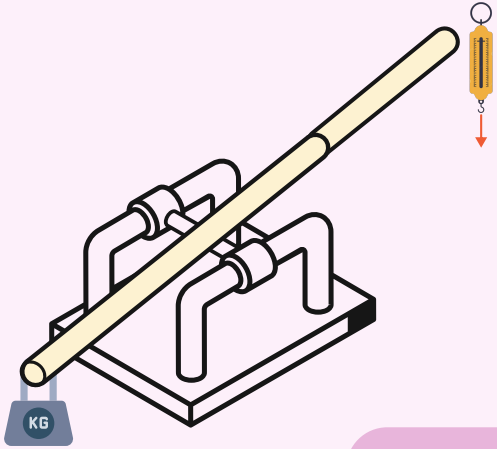

setup B

observation

measure the effort for each KG used:

	KG	effort setup A	effort setup B
1.	1kg		
2.	1.5kg		
3.	2kg		
which setup uses the least effort:			

result note the difference in both the setups -

levers: experiment 2

Lift 2kg, 2.5kg, 3kg by using a lever and a fulcrum at the center to find out which uses the most effort using a spring scale.

long 3 pipes

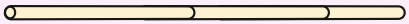

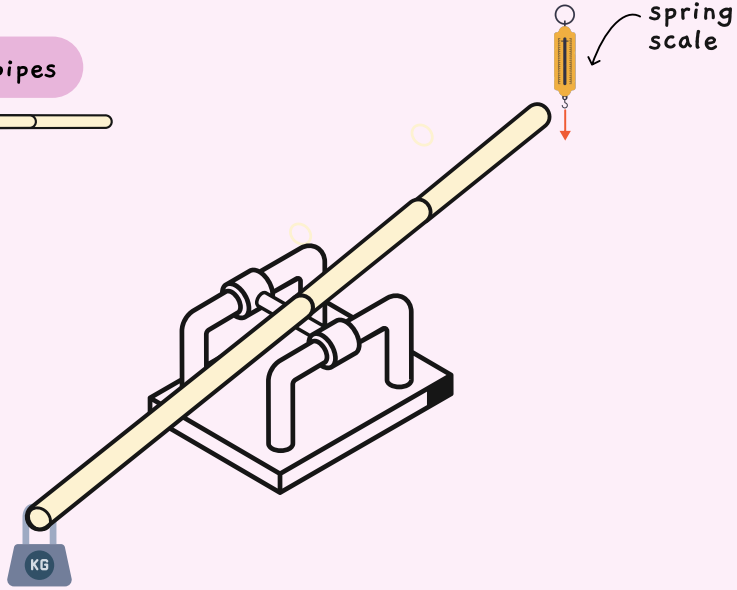

1. 2 kg
2. 2.5 kg
3. 3 kg

observation

measure the effort for each KG used:

	KG	effort
1.	**2 kg**	
2.	**2.5 kg**	
3.	**3 kg**	

which weight uses the most effort:

result write the correct answer

_____ the **weight,** _____ the **effort**

levers: experiment 3

Use levers of 3 different sizes and fulcrum at the center.
Find the best lever size that can lift 2kg with less effort.

1.

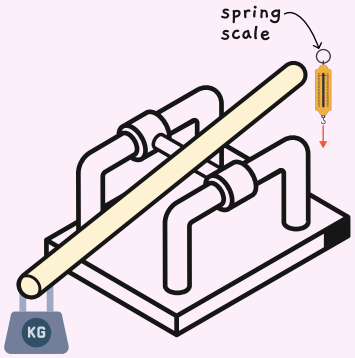

short 1 pipe

2.

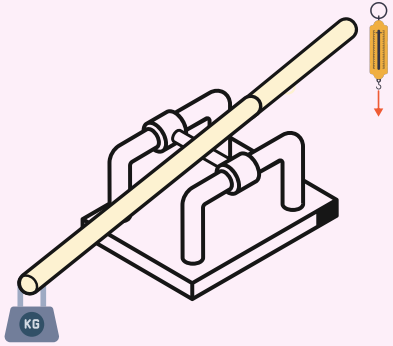

medium 2 pipes

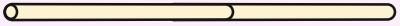

3.

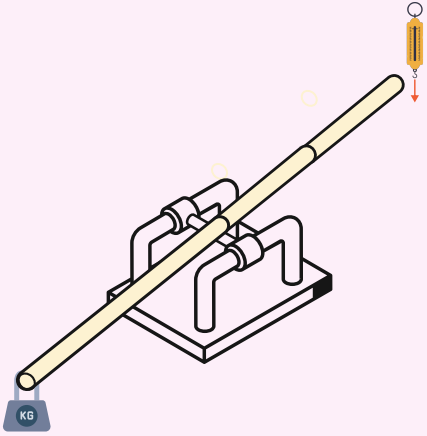

long 3 pipes

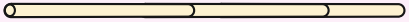

observation

measure the effort for each lever used:

	lever	effort
1.	**short**	
2.	**medium**	
3.	**long**	

which lever size uses the least effort:

result tick the correct answer

_____ the **lever size** _____ the **effort**

levers: experiment 4

Build a weighing scale using a lever and fulcrum at center position to balance 2kg,2.5kg & 3kg by evenly balancing it against materials you can find around.

medium 2 pipes

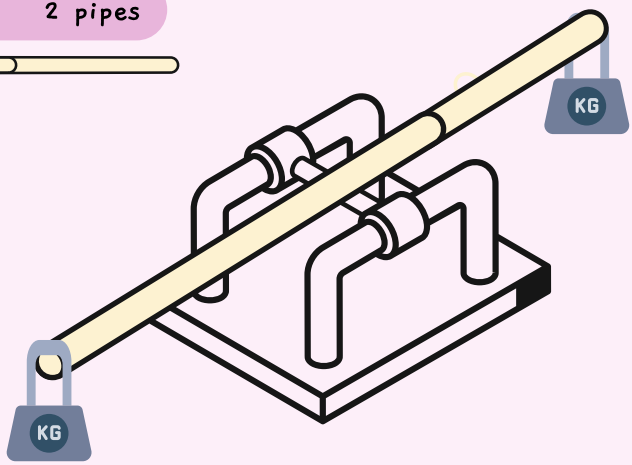

1. 2 kg
2. 2.5 kg
3. 3 kg

observation

mention the objects that evenly balanced against each:

		objects used
1.	2 kg	
2.	2.5 kg	
3.	3 kg	

tick the right answer

to evenly balance both sides, the must be:

equal / unequal

levers: experiment 5

There is 0.5kg on one end of the lever and 1.5kg on the other end of the lever. Try different fulcrum positions to evenly balance both.

medium 2 pipes

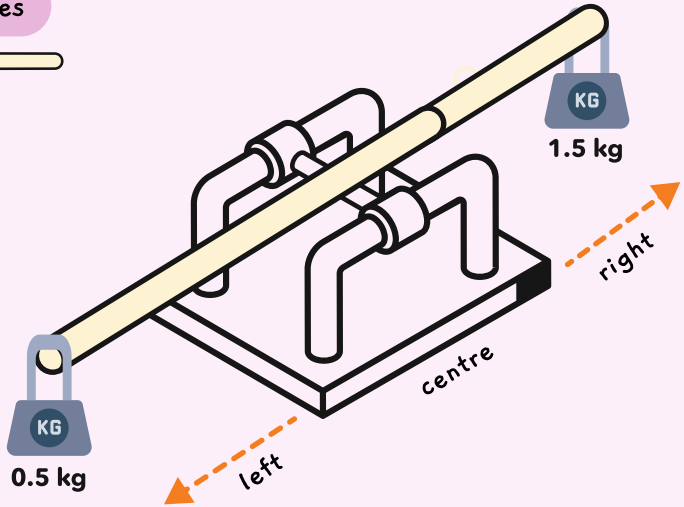

observation

tick the fulcrum position which evenly balances the

1. **at the centre**

2. **to the left**

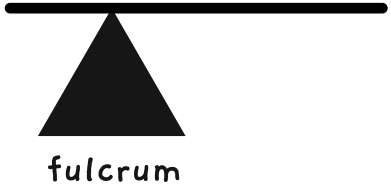

3. **to the right**

levers: experiment 6

Use levers of 3 different sizes and fulcrum close to the load.
Find the best lever size that can lift 2kg with less effort.

1.

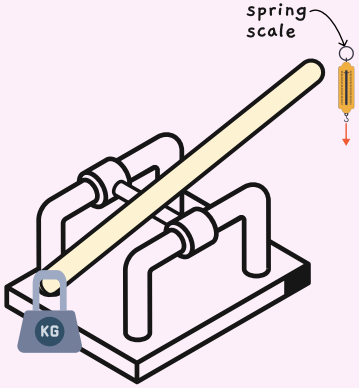

short 1 pipe

2.

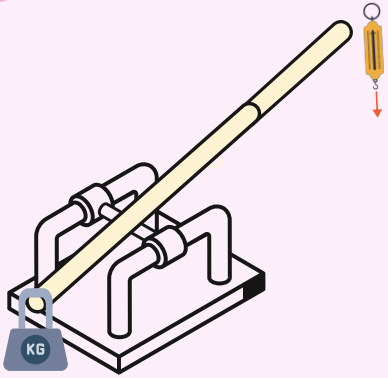

medium 2 pipes

3.

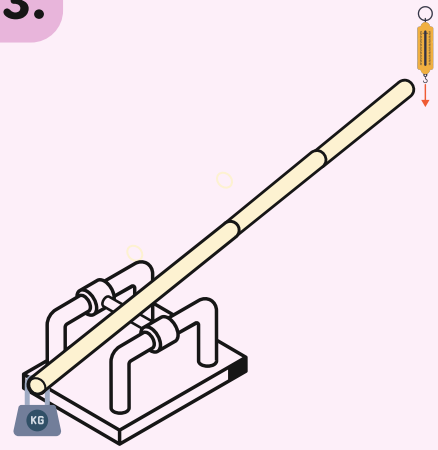

long 3 pipes

observation

measure the effort for each lever used:

	lever	effort
1.	**short**	
2.	**medium**	
3.	**long**	

which lever size uses the least effort:

result tick the correct answer

_____ the **lever size** _____ the **effort**