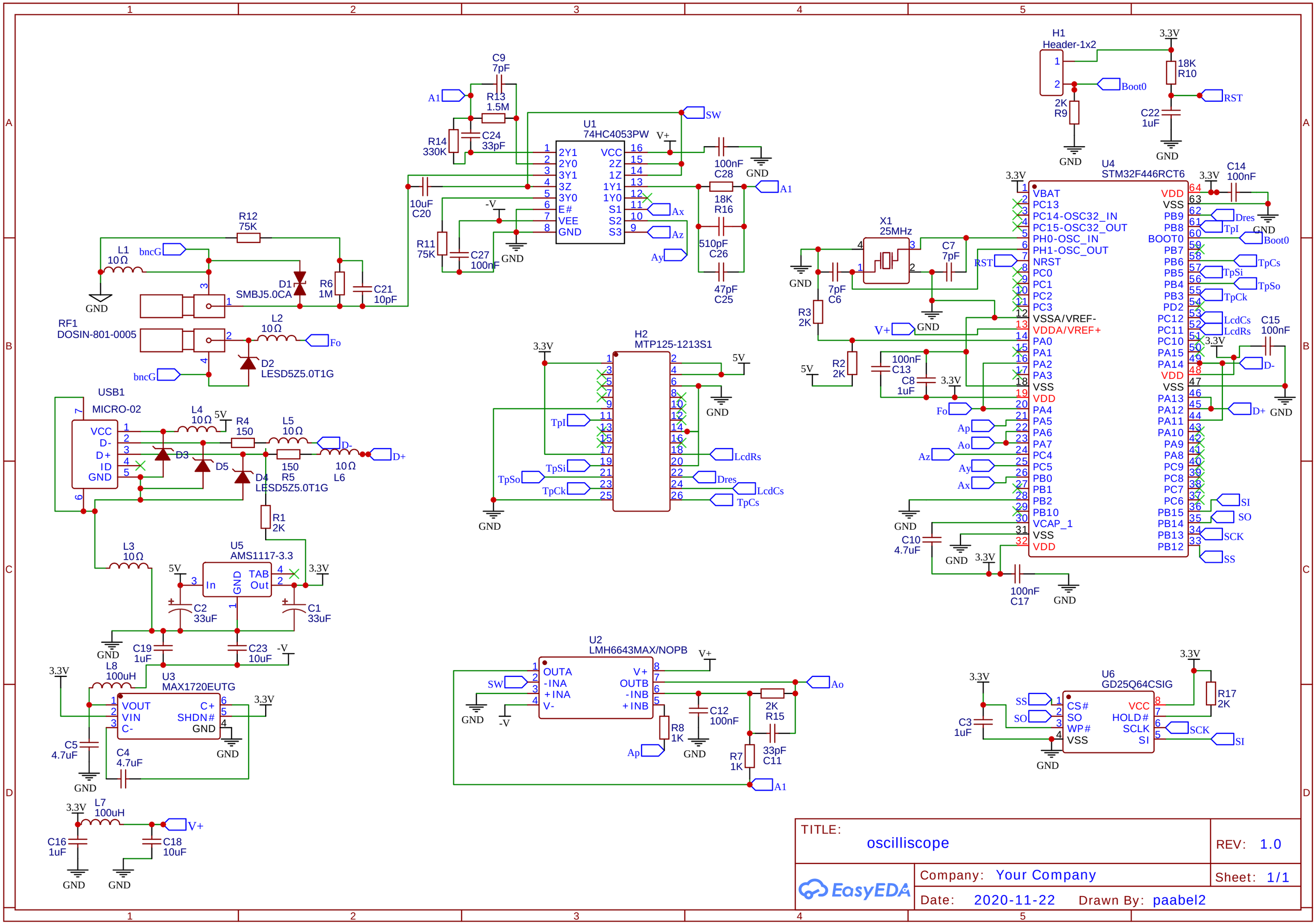
U1
74HC4053PW
2Y1
2Y0
3Y1
3Z
3Y0
E#
VEE
GND
VCC
2Z
1Z
1Y1
1Y0
S1
S2
S3
C9
7pF
R13
1.5M
R14
330K
C24
33pF
10uF
C20
R11
75K
C27
100nF
100nF
C28
18K
R16
510pF
C26
47pF
C25
SW
A1
Ax
Az
Ay
V+
-V
GND
H1
Header-1x2
Boot0
2K
R9
18K
R10
C22
1uF
RST
3.3V
U4
STM32F446RCT6
VBAT
PC13
PC14-OSC32_IN
PC15-OSC32_OUT
PH0-OSC_IN
PH1-OSC_OUT
NRST
PC0
PC1
PC2
PC3
VSSA/VREF-
VDDA/VREF+
PA0
PA1
PA2
PA3
VSS
VDD
PA4
PA5
PA6
PA7
PC4
PC5
PB0
PB1
PB2
PB10
VCAP_1
VSS
VDD
VDD
VSS
PB9
PB8
BOOT0
PB7
PB6
PB5
PB4
PB3
PD2
PC12
PC11
PC10
PA15
PA14
VDD
VSS
PA13
PA12
PA11
PA10
PA9
PA8
PC9
PC8
PC7
PC6
PB15
PB14
PB13
PB12
C14
100nF
Dres
TpI
TpCs
TpSi
TpSo
TpCk
LcdCs
LcdRs
C15
100nF
D-
D+
SI
SO
SCK
SS
X1
25MHz
C7
7pF
7pF
C6
R3
2K
R2
2K
100nF
C13
C8
1uF
Fo
Ap
Ao
Az
Ay
Ax
C10
4.7uF
100nF
C17
RST
V+
5V
H2
MTP125-1213S1
TpI
TpSi
TpSo
TpCk
LcdRs
Dres
LcdCs
TpCs
RF1
DOSIN-801-0005
L1
10Ω
bncG
D1
SMBJ5.0CA
R6
1M
C21
10pF
R12
75K
L2
10Ω
Fo
D2
LESD5Z5.0T1G
USB1
MICRO-02
VCC
D-
D+
ID
GND
L4
10Ω
R4
150
L5
10Ω
D3
D5
D4
LESD5Z5.0T1G
150
R5
10Ω
L6
R1
2K
L3
10Ω
U5
AMS1117-3.3
In
GND
TAB
Out
C2
33uF
C1
33uF
C19
1uF
C23
10uF
L8
100uH
U3
MAX1720EUTG
VOUT
VIN
C-
C+
SHDN#
GND
C5
4.7uF
C4
4.7uF
L7
100uH
C16
1uF
C18
10uF
U2
LMH6643MAX/NOPB
OUTA
-INA
+INA
V-
V+
OUTB
-INB
+INB
R8
1K
C12
100nF
2K
R15
33pF
C11
R7
1K
Ao
U6
GD25Q64CSIG
CS#
SO
WP#
VSS
VCC
HOLD#
SCLK
SI
R17
2K
C3
1uF
SS
SO
SCK
SI
TITLE:
oscilliscope
REV: 1.0
Company: Your Company
Sheet: 1/1
Date: 2020-11-22
Drawn By: paabel2
EasyEDA