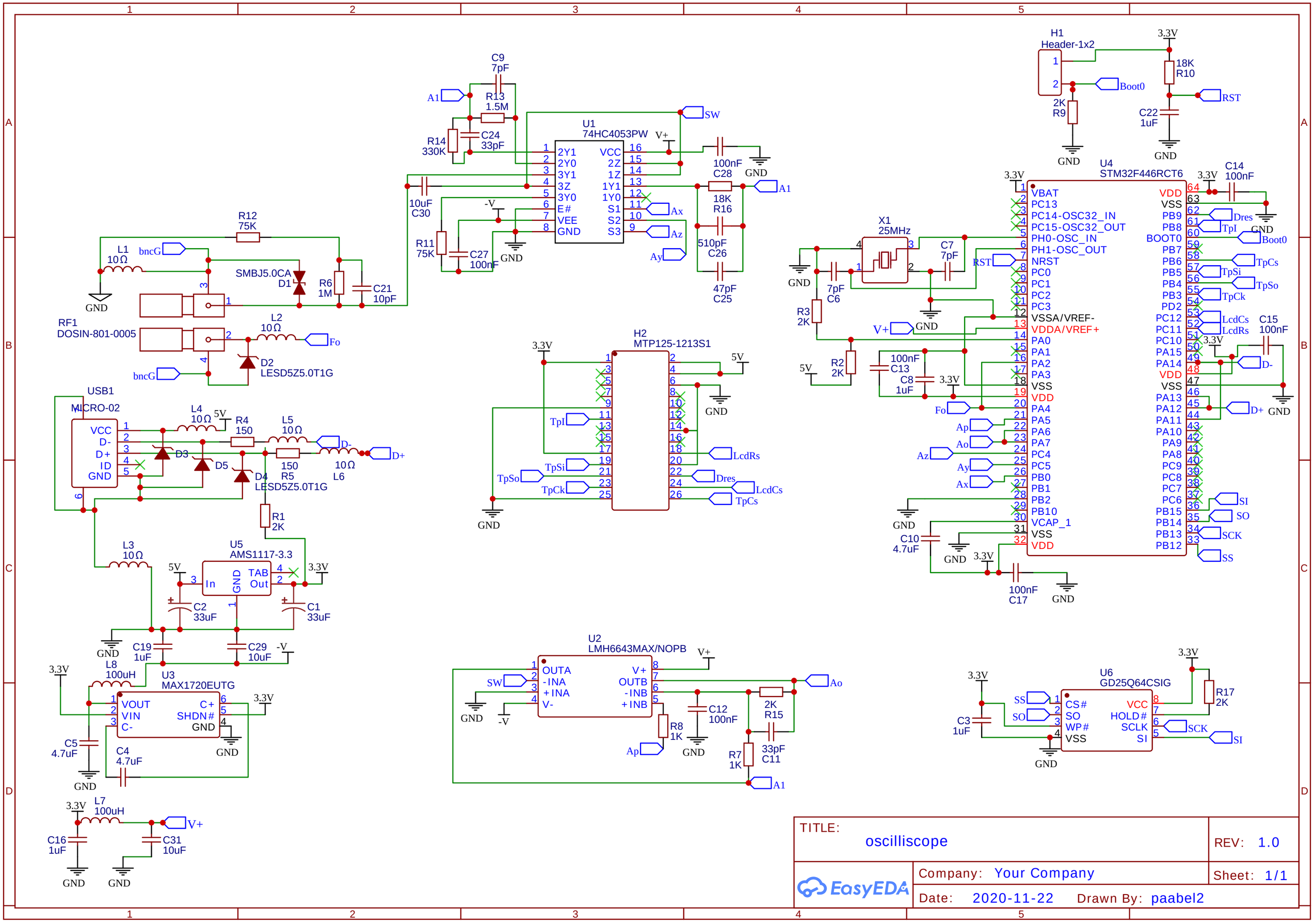

TITLE: oscilliscope

REV: 1.0

Company: Your Company

Sheet: 1/1

Date: 2020-11-22

Drawn By: paabel2