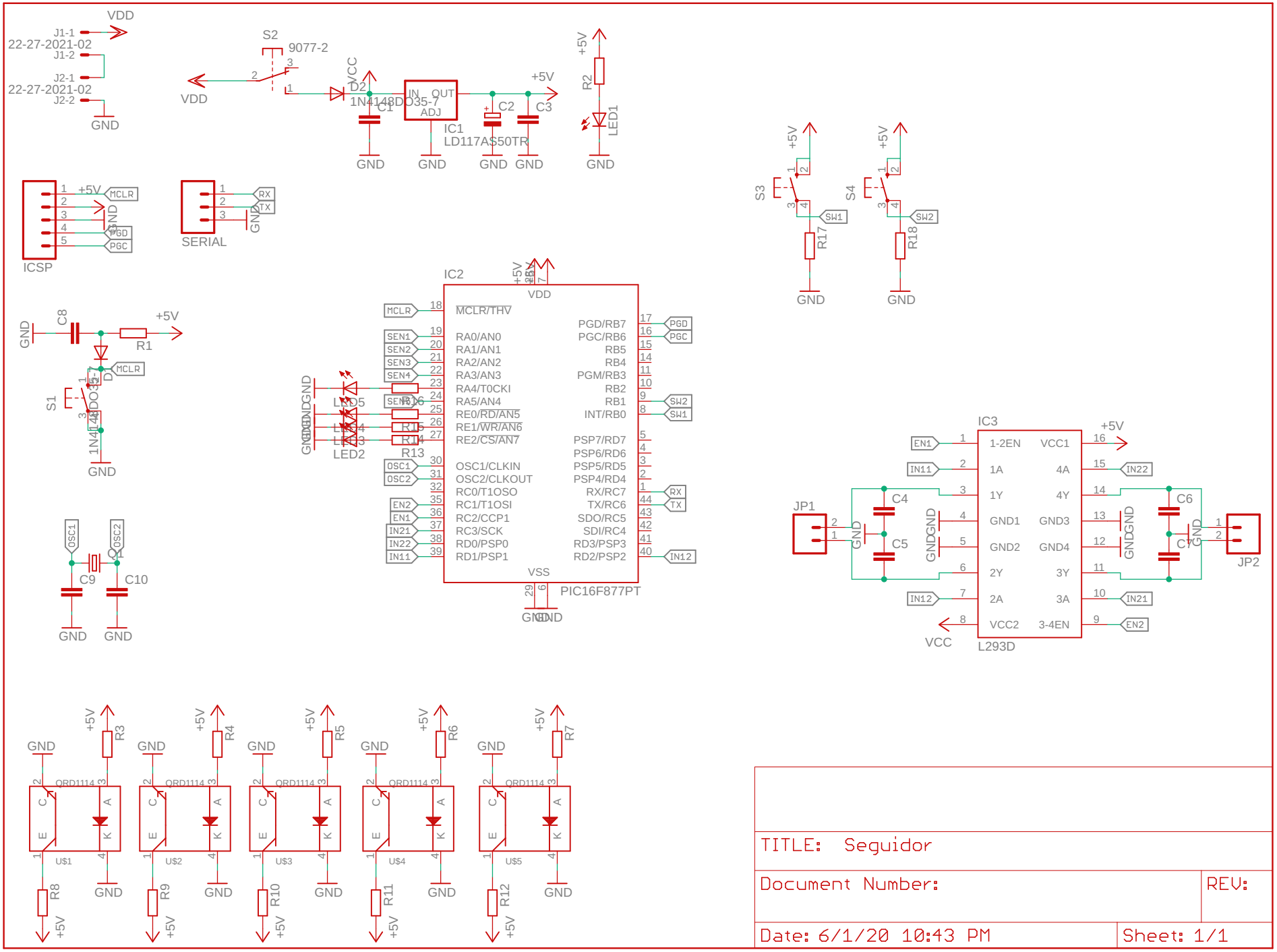

TITLE: Seguidor

Document Number:

REV:

Date: 6/1/20 10:43 PM

Sheet: 1/1