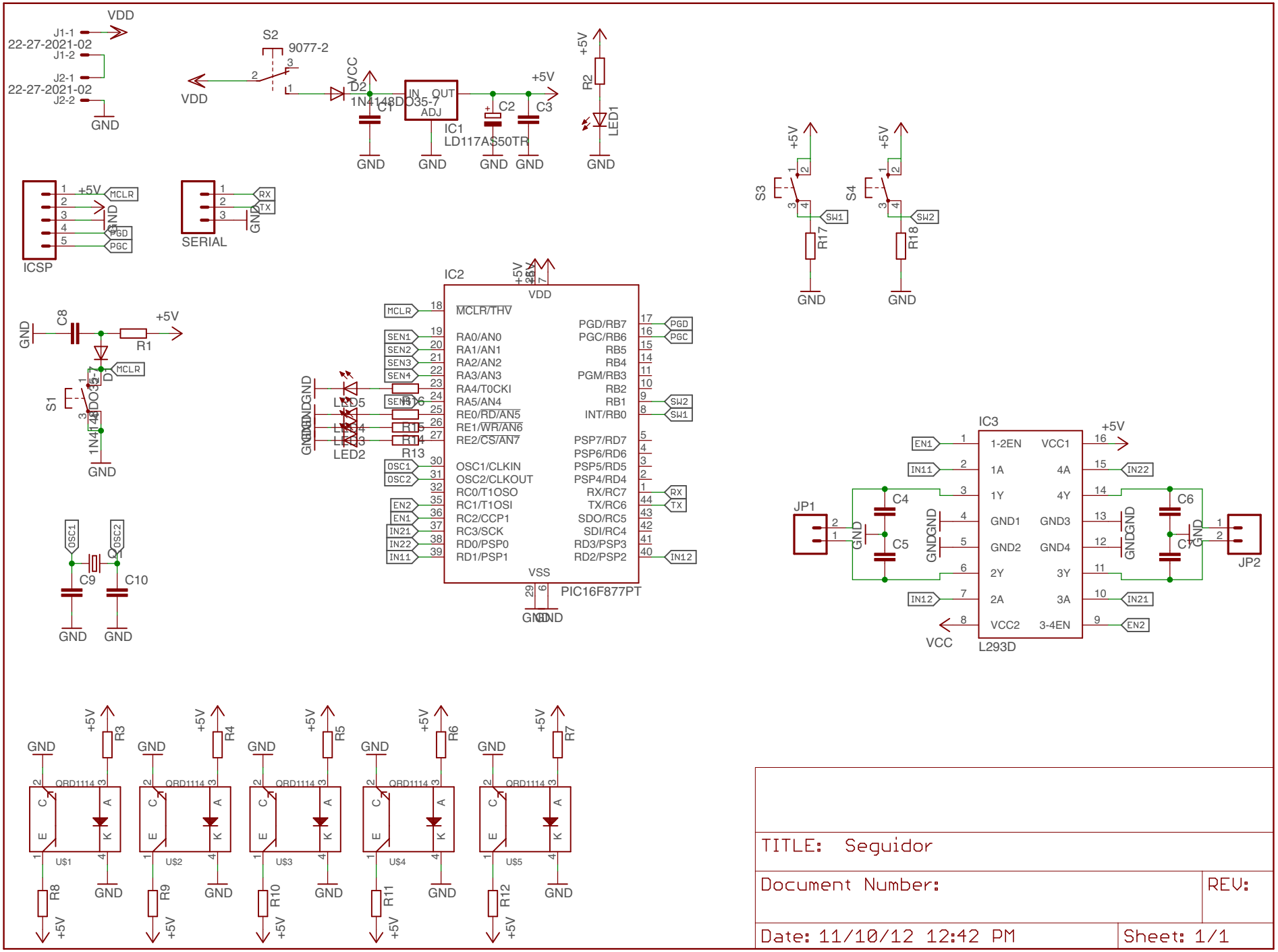

TITLE: Seguidor

Document Number:

REV:

Date: 11/10/12 12:42 PM

Sheet: 1/1