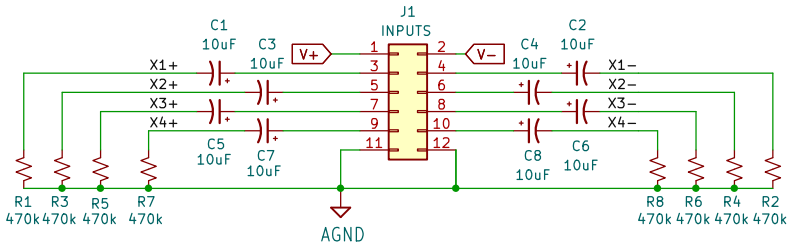

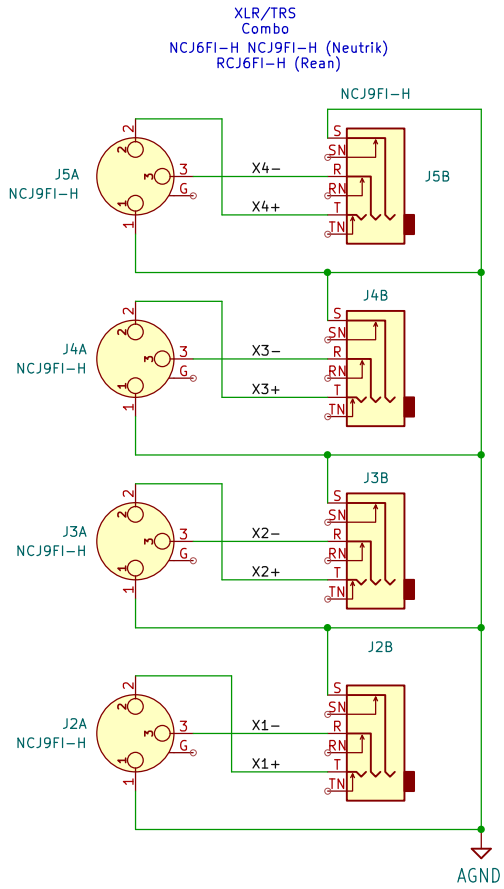

Platypus (Richard Palmer)

Sheet: /

File: Wing Board 4 Combo mk II.kicad_sch

Title: XLR Combo Wing Board

Size: A4	Date: 2025−03−13	**Rev: K**
KiCad E.D.A. 9.0.0		Id: 1/1