ECT 203: LOGIC CIRCUIT DESIGN:

AUTOMATIC PLANT IRRIGATION SYSTEM

PROJECT REPORT

SUBMITTED BY:

DIYA P. M. (19)

FATHIMA PALOT (20)

GANGA ARAVIND (21)

S3 - ECE - A

INTRODUCTION:

As part of the course 'Logic Circuit Design', we have built an automatic plant irrigation system using NE555 IC and a moisture sensor. Using the sensor, we can check whether the soil has adequate moisture and if not, supplies water to via a pump/motor, which provides it water until it has reached a certain moisture level. When people go on vacations or are not present at home for a long period of time, they forget to water their plants. This project is an excellent solution for such problems, so plants can be watered automatically, without any human interference.

COMPONENTS REQUIRED:

- NE555 IC
- Soil Moisture Sensor
- CL100 Transistor
- LED
- 47 kΩ resistor
- 1 kΩ resistor [x2]
- 9V battery and battery connector
- Submersible water pump
- Breadboard
- Connecting Wires

SOIL MOISTURE SENSOR:

The Soil Moisture Sensor is a simple device for measuring the moisture in soil or similar materials. It consists of two large exposed pads/leads which function as probes for the sensor, together acting as a variable resistor. The sensor uses the two probes to pass current through the soil, and then it reads that resistance to get the moisture level.

NE555 IC:

The 555 timer IC is an integrated circuit used in a variety of timer, delay, pulse generation, and oscillator applications. In this project, the IC was used to create a Schmitt trigger inverter gate which converts a noisy input into a clean digital output. Schmitt Trigger is a special type of comparator that is used to avoid imperfect analog signals. A comparator is a device that compares two voltages and the outcome is the indication of whether one voltage is higher than the other or not. Schmitt trigger compares the input voltage to two reference voltages and produces an equivalent output.

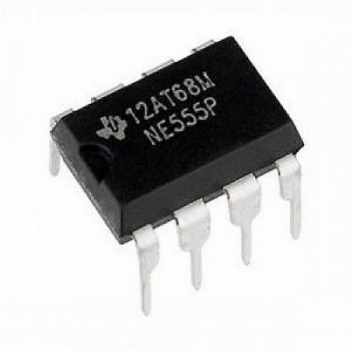

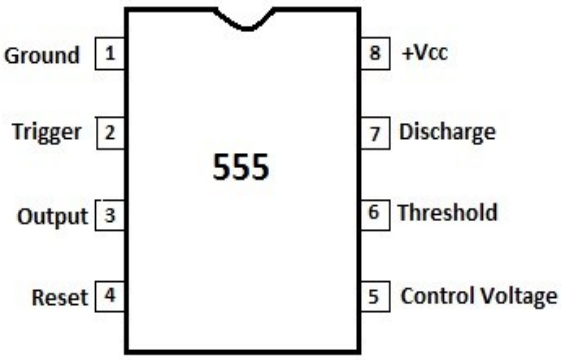

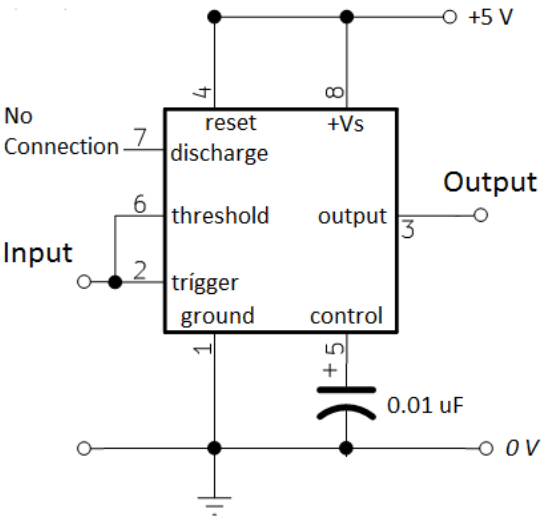

NE555 IC as a Schmitt Trigger

BLOCK DIAGRAM:

CIRCUIT DIAGRAM:

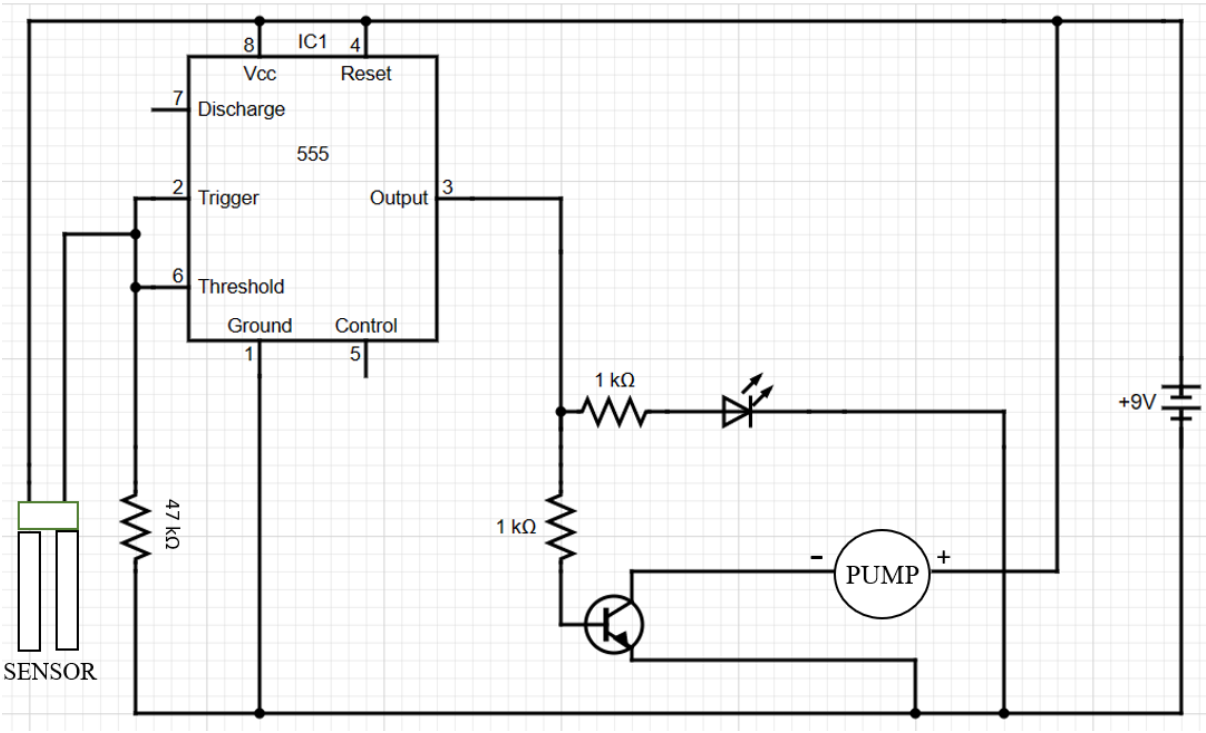

WORKING PRINCIPLE:

The moisture sensor which is connected to the circuit is placed into the soil. The voltage is given to the leads of the sensor to conduct is given from the battery connected to the circuit.

Since the NE555 is configured as a Schmitt Trigger, it will behave as follows: The output of the Schmitt trigger is high if the input voltage is greater than the upper threshold value and the output of the Schmitt trigger is low if the input voltage is lower than the lower threshold value.

The threshold values in this case are 2/3 VCC and 1/3 VCC i.e. the upper comparator trips at 2/3 VCC and the lower comparator trips at 1/3 VCC. The input voltage is compared to these threshold values by the individual comparators and the flip-flop is SET or RESET accordingly. Based on this the output becomes high or low.

The output of NE555 timer will switch on the transistor CL100 which will turn on the water pump. When transistor has turned on the pump, water will flow from the supply to the soil. When the water content in the soil is increased, the flow from the supply stops.

Once the soil dries up, the whole process repeats again.

LED lights up when the sensor detects no moisture and the pump switches on and hence will stop lighting up once the soil has adequate moisture.

…