TEMPERATURE CONTROLLED FAN USING 8051 MICROCONTROLLER

PROJECT REPORT

ECT 206 – COMPUTER ARCHITECTURE AND MICROCONTROLLERS

SUBMITTED TO:

DR. SAJITH K

DEPT. OF ELECTRONICS AND COMMUNICATION ENGINEERING

SUBMITTED BY:

DIYA P M (19)

FATHIMA PALOT (20)

GANGA ARAVIND (21)

S4 - ECE - A

Introduction:

The aim of the project is to control the speed of a Fan (DC Motor) according to the temperature of the environment. The more the temperature, the more will be the speed of the fan and maintains the coolness of the surroundings. The fan doesn't switch on for temperature below 0°C and slowly varies its speed from minimum to maximum over 0 to 150°C. The circuit is simulated in Proteus Simulation Software.

Circuit Principle:

The main principles used in the project are ADC (Analog to Digital Conversion) and PWM (Pulse Width Modulation). The operation of the circuit starts from reading the temperature of the environment using the LM35 Temperature Sensor. It is connected to ADC0804 which converts the analog signal of the sensor into digital. The digital output of the ADC is sent to the 8051 Microcontroller, which calculates the temperature by scaling it and then the duty cycle of the PWM Pulse is calculated. We will be using timer 0 in mode 3 to switch on and off the motor. We used the motor driver L293D, which connects the DC Motor and supplies the motor with sufficient current and power to run.

Components Required:

LM35:

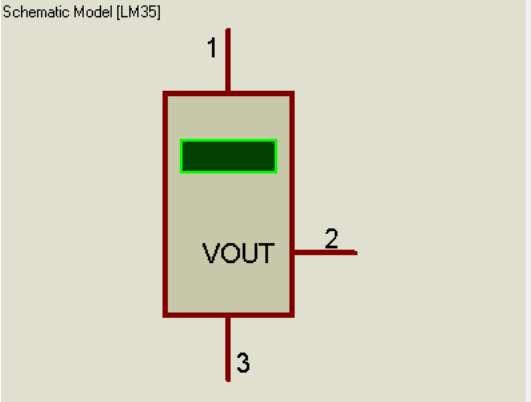

The LM35 is a temperature sensor whose output voltage varies depending on the temperature around it. It's a small integrated circuit that can test temperatures from -55°C to 150°C. It can be easily connected to any microcontroller with an ADC feature, as well as any development platform such as Arduino. If the temperature is 0 degrees Celsius, the output voltage would also be 0 degrees Celsius. For every degree Celsius increase in temperature, the voltage will rise by 0.01V (10mV).

ADC0804:

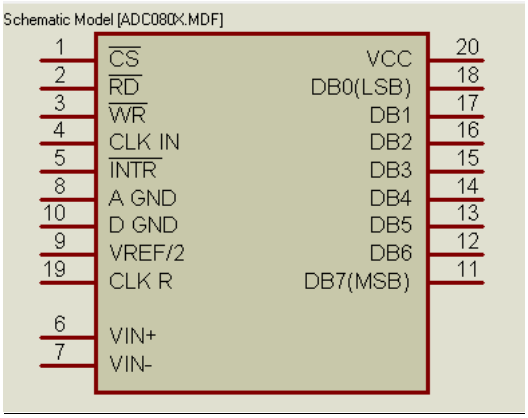

The ADC0804 is a popular ADC module for projects that require an external ADC. It's a single channel 8-bit ADC module with 20 pins. For every 19.53mV increase on the input side, the output side would increase by one bit. Every ADC requires a clock to function. Here the advantage is the clock comes inbuilt for this IC.

L293D:

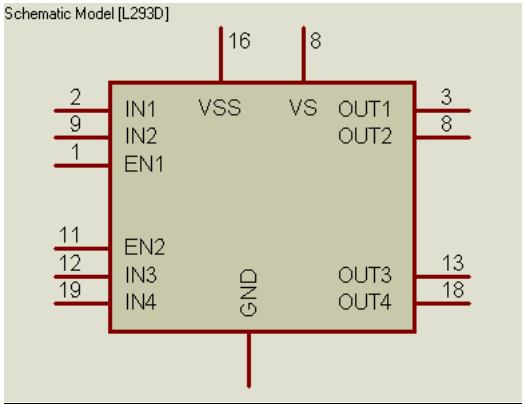

The L293D is a 16-pin motor driver IC that is widely used. It is primarily used to drive motors, as the name implies. A single L293D IC can drive two DC motors at the same time, and the two motors' directions can be operated independently.

8051:

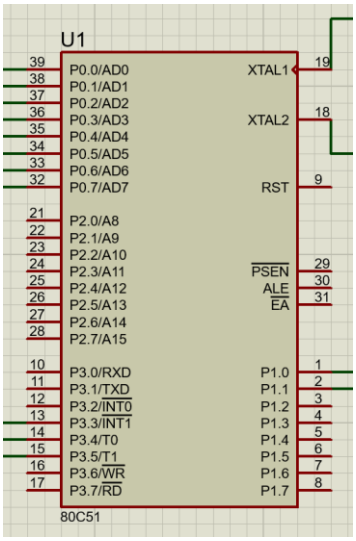

8051 is one of the first and most popular microcontrollers, with Intel introducing it in the year 1981. Initially, it came out as an N-type metal-oxide-semiconductor (NMOS) based microcontroller, but later versions were based on complementary metal-oxide-semiconductor (CMOS) technology. These microcontrollers were named 80C51, where C in the name tells that it is based on CMOS technology. It is an 8-bit microcontroller, therefore, it can process 8 bits at a time. It is used in a wide variety of embedded systems like robotics, remote controls, the automotive industry, telecom applications, power tools, etc.

Block Diagram:

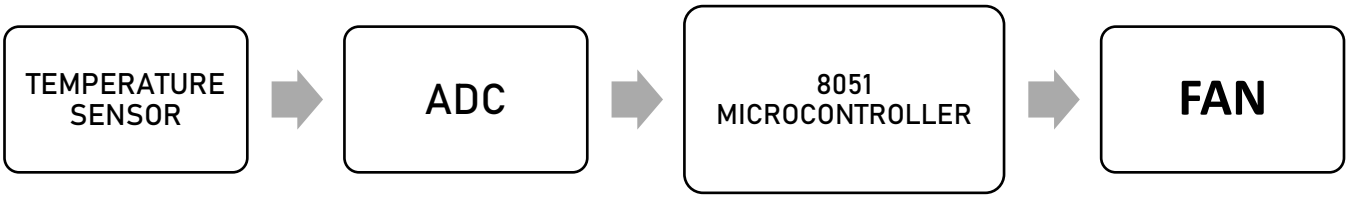

Circuit Diagram:

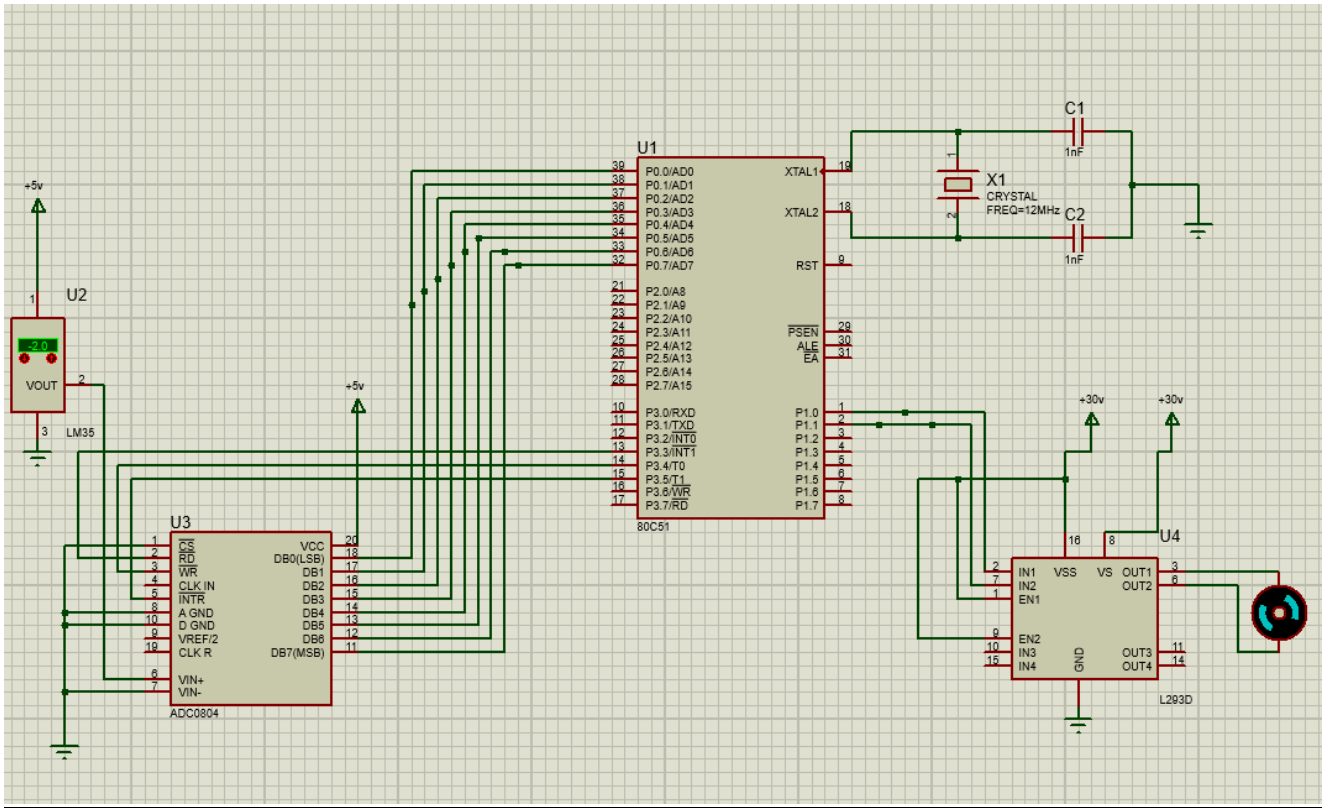

Working:

The working of the circuit is explained in the following steps, each describing the specific part of the circuit:

Temperature Detection & ADC Conversion:

The sensor detects the temperature of the environment and sends the analog value of that to the ADC Converter. The converter converts that analog value into digital value and sends it to the 8051 Microcontroller.

8051 MC and Digital Value Indicator:

8051 receives the digital output of the ADC through the P0 port. We then used the logic to scale the temperature value to 255, which should be the input for the PWM pulse. From the observation we did, we have to multiply the digital value by 3 to scale the value to 255.

Motor and Motor Driver:

The DC Motor which is connected to the 8051MC via L293D Motor Driver to provide the DC Motor with sufficient current. Here, we are rotating the motor in an A.C.W sense, so for that IN2 pin must be high and IN1 pin must be low. The IN1 pin is always et to low and we control the IN2 pin using PWM.

Source Code:

```
$NOMOD51

$INCLUDE (8051.MCU)


 org   0000h


SETB P1.0

CPL P1.0

Start:

        SETB P3.3;

        CLR P3.4;

        SETB P3.5;

        SETB P3.4;

        stay: JB P3.5, stay

        CLR P3.3


       MOV TMOD,#00H

       MOV R1, P0;

       MOV A, R1;

       MOV B, #3;

       MUL AB;

       MOV P2,A;

       CPL A;

       MOV R7, A
```

```
        SETB TR0 ;
        CLR P1.1;
        LCALL HIGH_DONE;
        SETB TR0
        LCALL LOW_DONE;
        JMP Start
HIGH_DONE:
        SETB P1.1
        CLR TF0
        MOV TH0, R7
     stay1: JNB TF0, stay1;
        CLR TF0
        RET
LOW_DONE:
        CLR P1.1
        MOV A, #0FFH
        CLR C
        SUBB A, R7
        MOV TH0, A
        stay2: JNB TF0, stay2;
        CLR TF0
        RET
Loop:
    jmp Loop
    END
```

Conclusion:

The basic idea of this project is to automate the fan speed according to the temperature without any need for us to change the speed of the fan every time the temperature changes, we used 8051 microcontroller to control the fan speed, a temperature sensor named LM35 gives analog voltage directly proportional to the temperature, and this analog voltage signal is then converted into a digital signal using ADC0804 and this digital signal is used to make a PWM signal which is fed to the DC motor. The duty cycle is directly proportional to the temperature; hence the DC motor speed will be proportional to the temperature. In this way, our main objective of the project is achieved.