Power supply

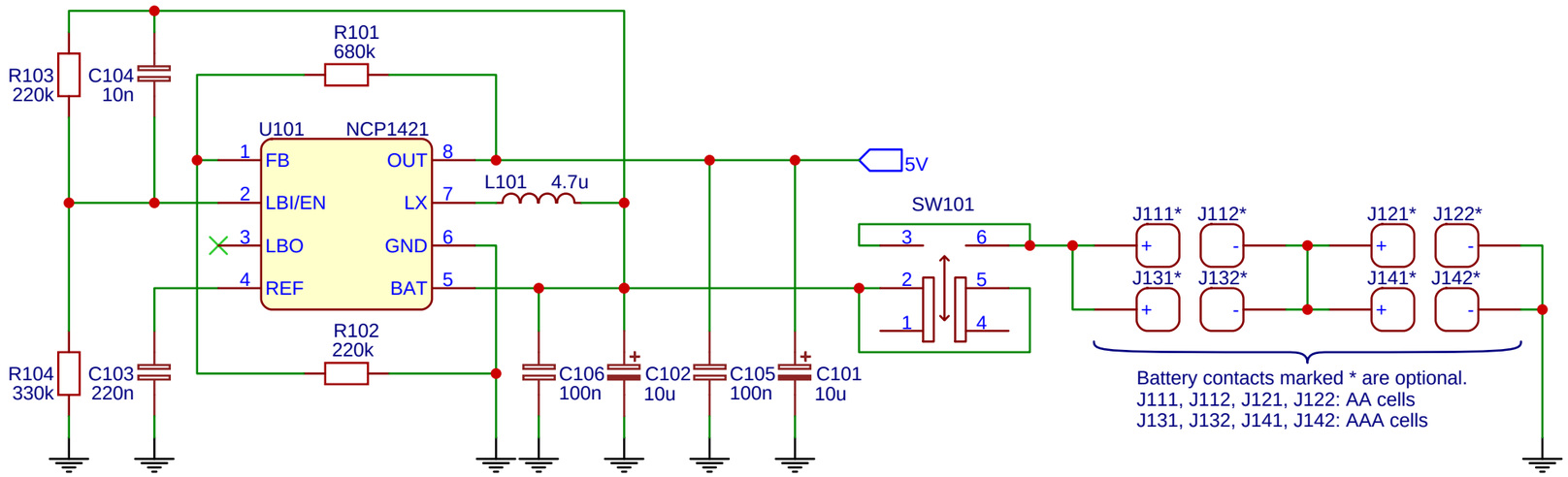

Arduino UNO interface

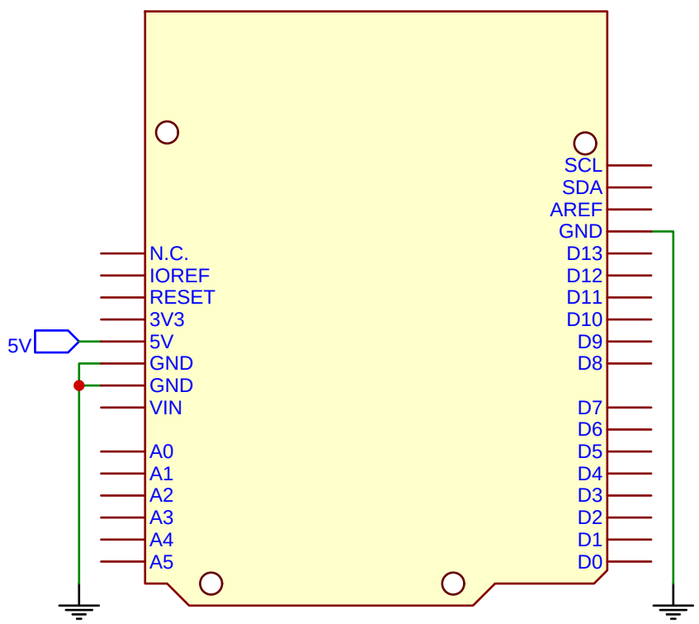

TITLE: Shield AA/AAA Cells (d19d)		REV: 1.5
Panasonic INDUSTRY	Company: Panasonic Industry Europe	Sheet: 1/1
	Date: 2021-05-17 Drawn By: pieu-ms	