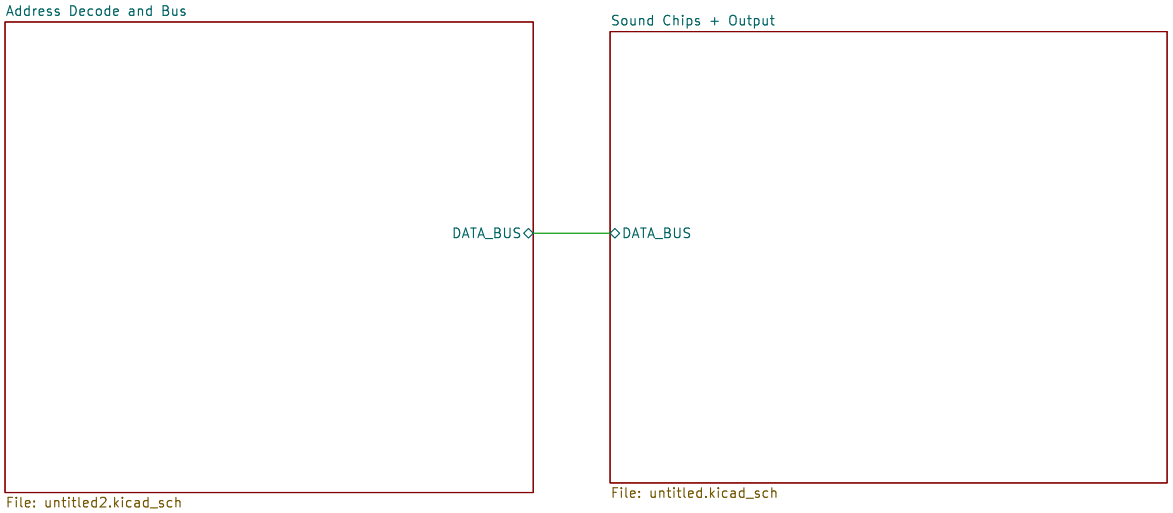

PancakePuppy

Sheet: /
File: mindescape.kicad_sch

Title: Mindscape Music Board

Size: A4	Date: 2025-01-26	**Rev: 1**
KiCad E.D.A. 8.0.8		Id: 1/3

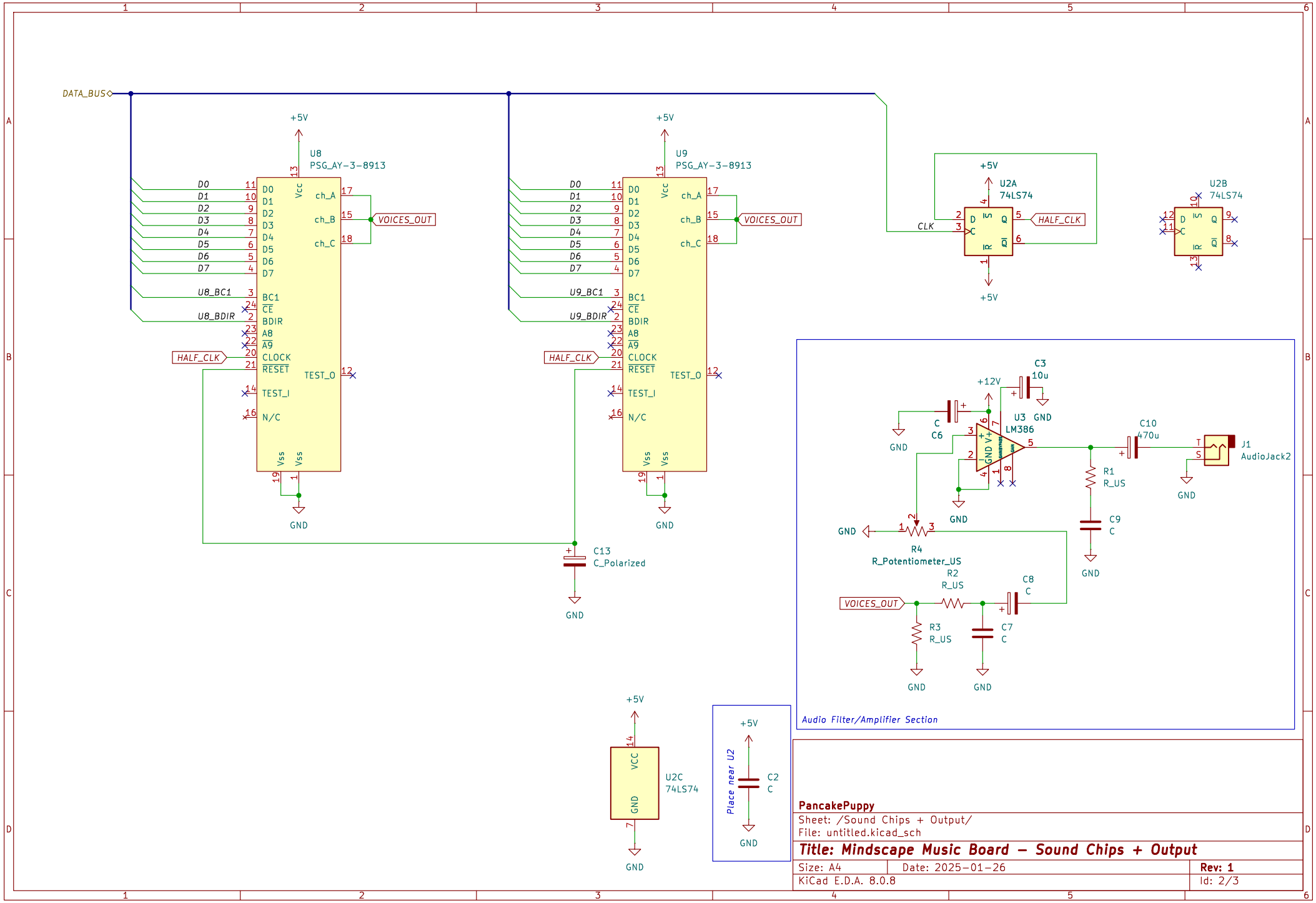

PancakePuppy

Sheet: /Sound Chips + Output/

File: untitled.kicad_sch

Title: Mindscape Music Board – Sound Chips + Output

Size: A4	Date: 2025-01-26	Rev: 1
KiCad E.D.A. 8.0.8		Id: 2/3

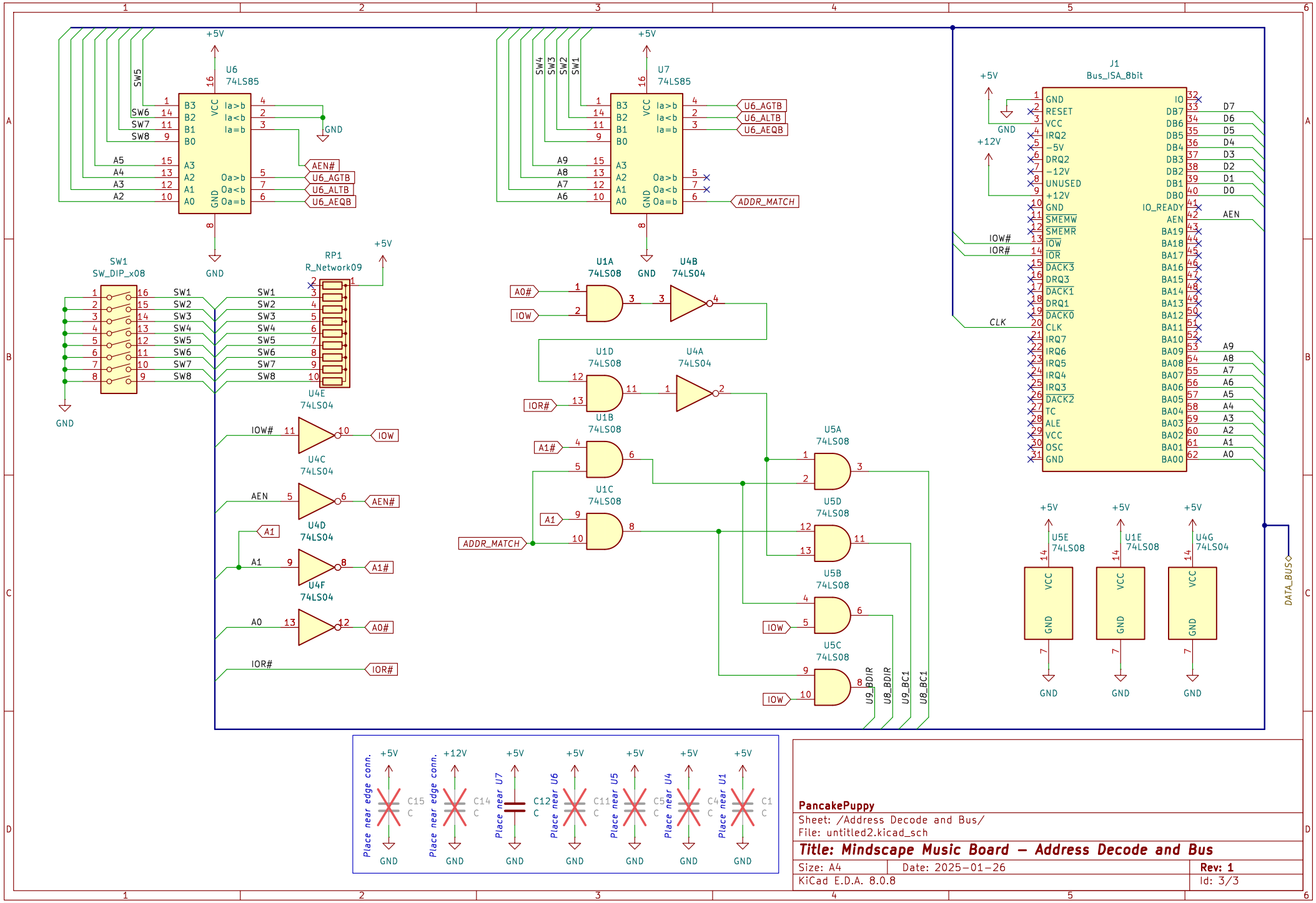

PancakePuppy

Sheet: /Address Decode and Bus/

File: untitled2.kicad_sch

Title: Mindscape Music Board – Address Decode and Bus

Size: A4	Date: 2025-01-26	Rev: 1
KiCad E.D.A. 8.0.8		Id: 3/3