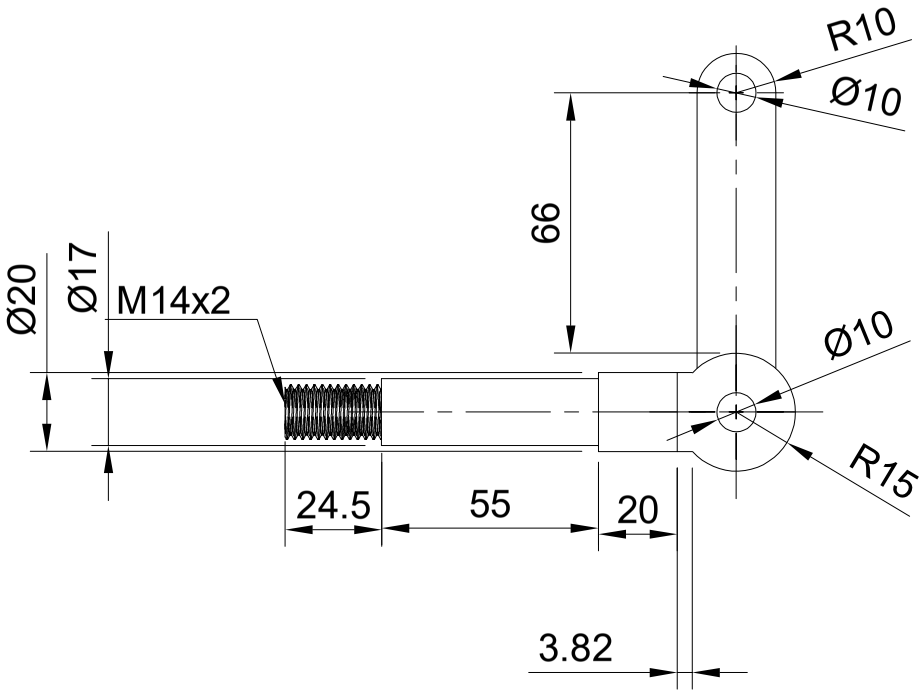

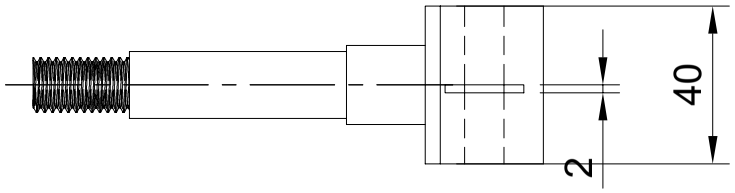

Dept.	Technical reference	Created by Krzysztof 04.04.2026	Approved by
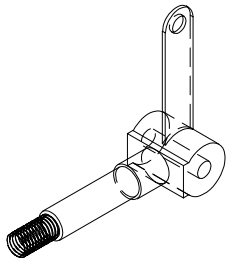		Document type	Document status
		Title Spindle	DWG No. 12.
			Rev. 1. / Date of issue 04.04.2026 / Sheet 1/1