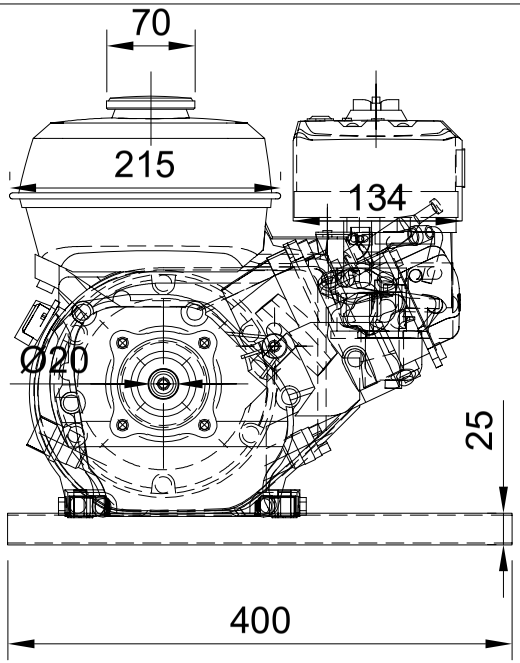

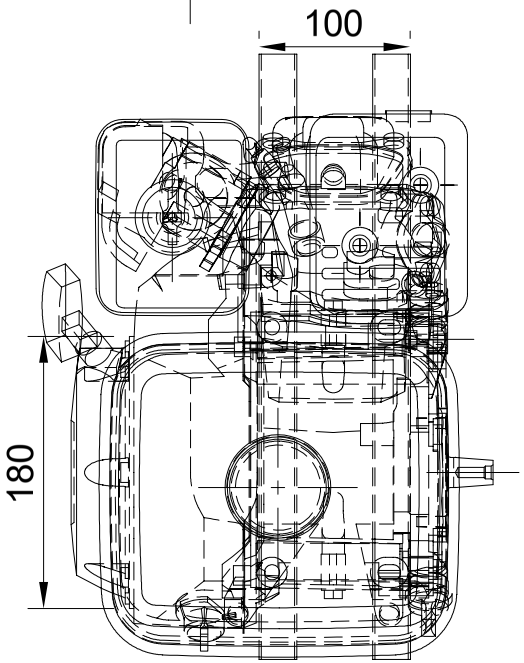

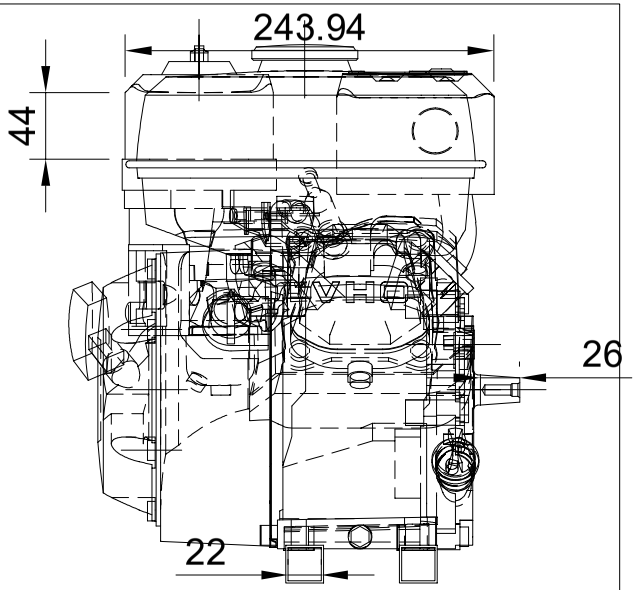

Dept.	Technical reference	Created by	Approved by
		Pancernik 03.04.2026	
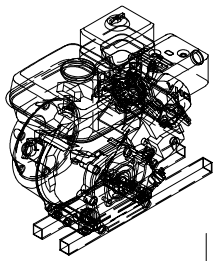		Document type	Document status
		Title GX160	DWG No. 6
			Rev. 1 / Date of issue 03.04.2026 / Sheet 1/1