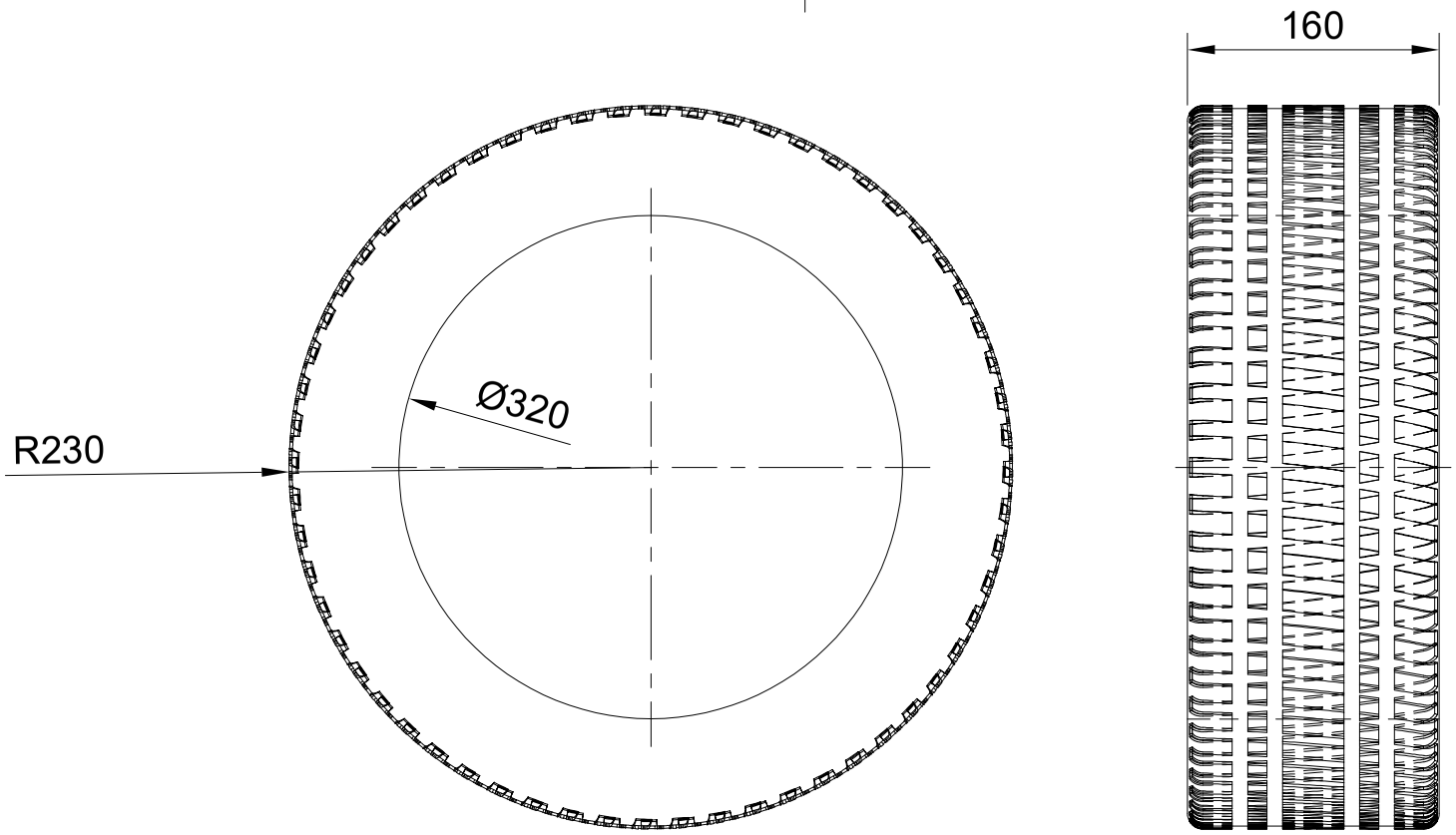

Dept.	Technical reference	Created by	Approved by
		Krzysztof 04.03.2026	
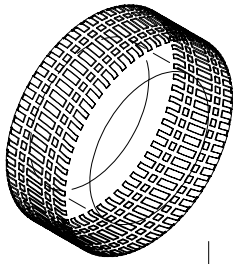		Document type	Document status
		Title Tyre	DWG No. 18.
			Rev. 1. / Date of issue 04.03.2026 / Sheet 1/1