Signature of Incharge

Rayat Shikshan Sanstha's

Page No.: 1

Name of the college : Sadguru Gadage Maharaj. College karad.

Subject: Electronics.

Expt. No. 1 | Name : [redacted] Class: BCS-II Batch: Roll No.: [redacted]

Date 18/07/2024 . Title of Expt.: study of ON/OFF Temperature controller.

Aim - To study the ON-off controller by using IM-35.

Components - Temperature Sensor IM 35, IC-741, Resistor, Diode, LED etc.

Equipments - power supply, multimeter etc.

Circuit Diagram -

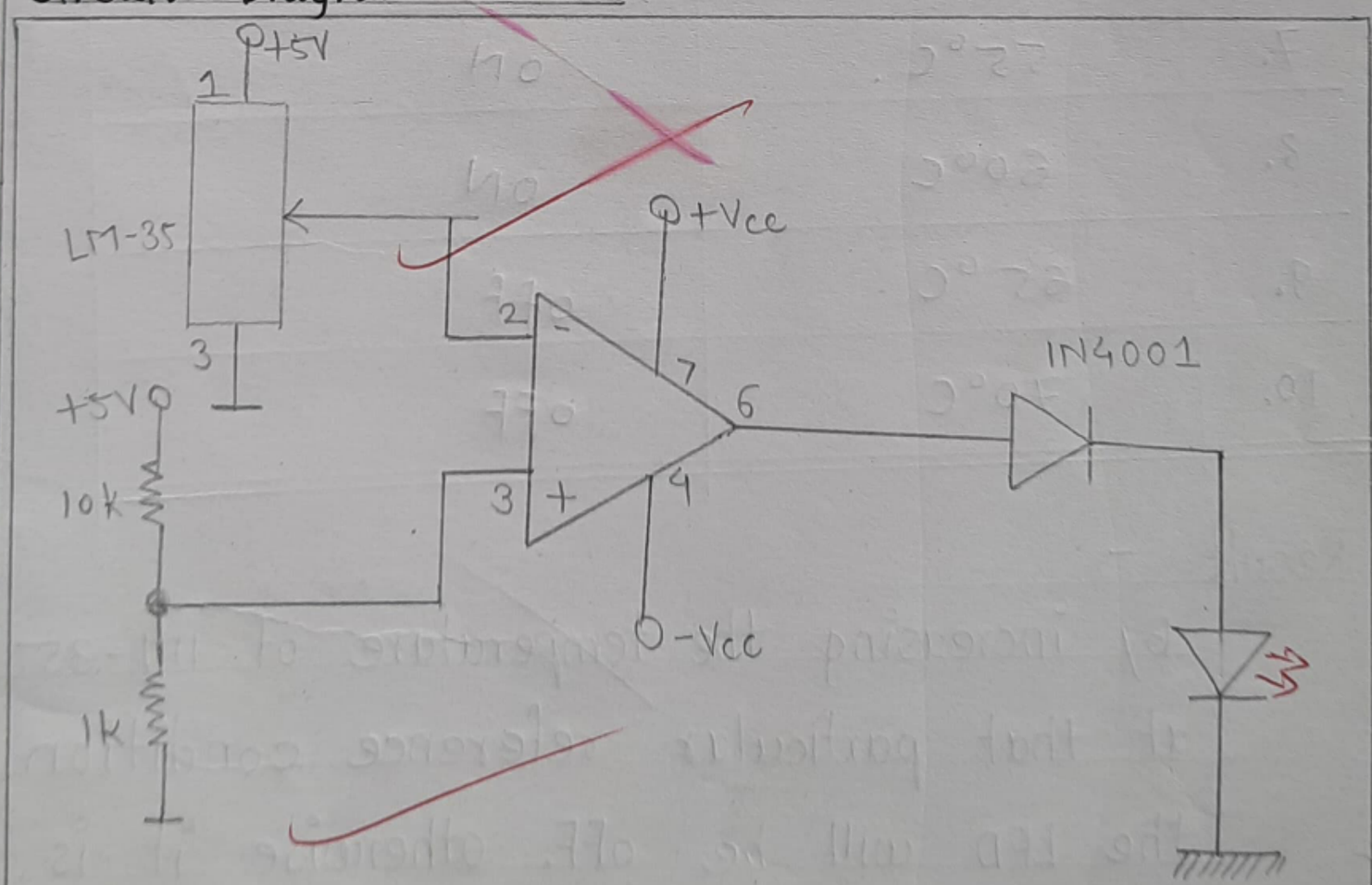

Dig. of ON/OFF Temperature Controller.

Remarks

Signature

Observation Table -

Vref = reference Voltage =

Sr. No.	Temperature	Condition of LED.
1.	25 °C	ON.
2.	30 °C	ON
3.	35 °C	ON
4.	40 °C	ON
5.	45 °C	ON
6.	50 °C	ON
7.	55 °C.	ON
8.	60 °C	ON
9.	65 °C	off
10.	70 °C	off

Result -

By increasing the temperature of IM-35 at that particular reference condition the LED will be off. otherwise it is in ON condition.

Name of the college :

Subject:

Expt. No. 2

Date 25-07-2024

Remarks

Signature