Rayat Shikshan Sanstha's

Name of the college : S.G.M College Karad

Subject: Digital electronics

Expt. No. 1

Date

Name : Pankaj Sayaji Mane Class: BCS-I Batch: Roll No.: 12

Title of Expt.: Logical Gates

Aim = Study of Logical Gates

Gates are logical system having number of inputs, but only one output depends upon instantaneous combination of inputs AND, OR and NOT gates are basic gates and NAND, NOR and Ex-OR gates are derived gates.

1) AND Gate : AND gate perform Logical multiplication is known as AND function. Both Inputs are high then output is high otherwise will below.

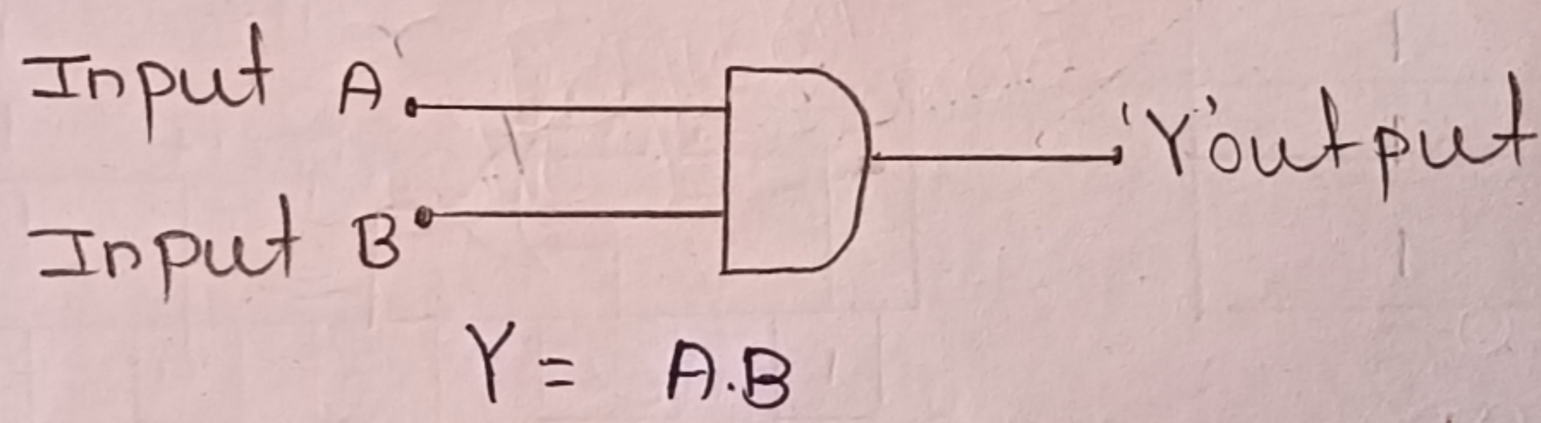

$Y = A.B$

Truth table :

Input		output
A	B	Y
0	0	0
0	1	0
1	0	0
1	1	1

C

Remarks

MS 21/10/23

Signature

Pin out Diagram of AND gate

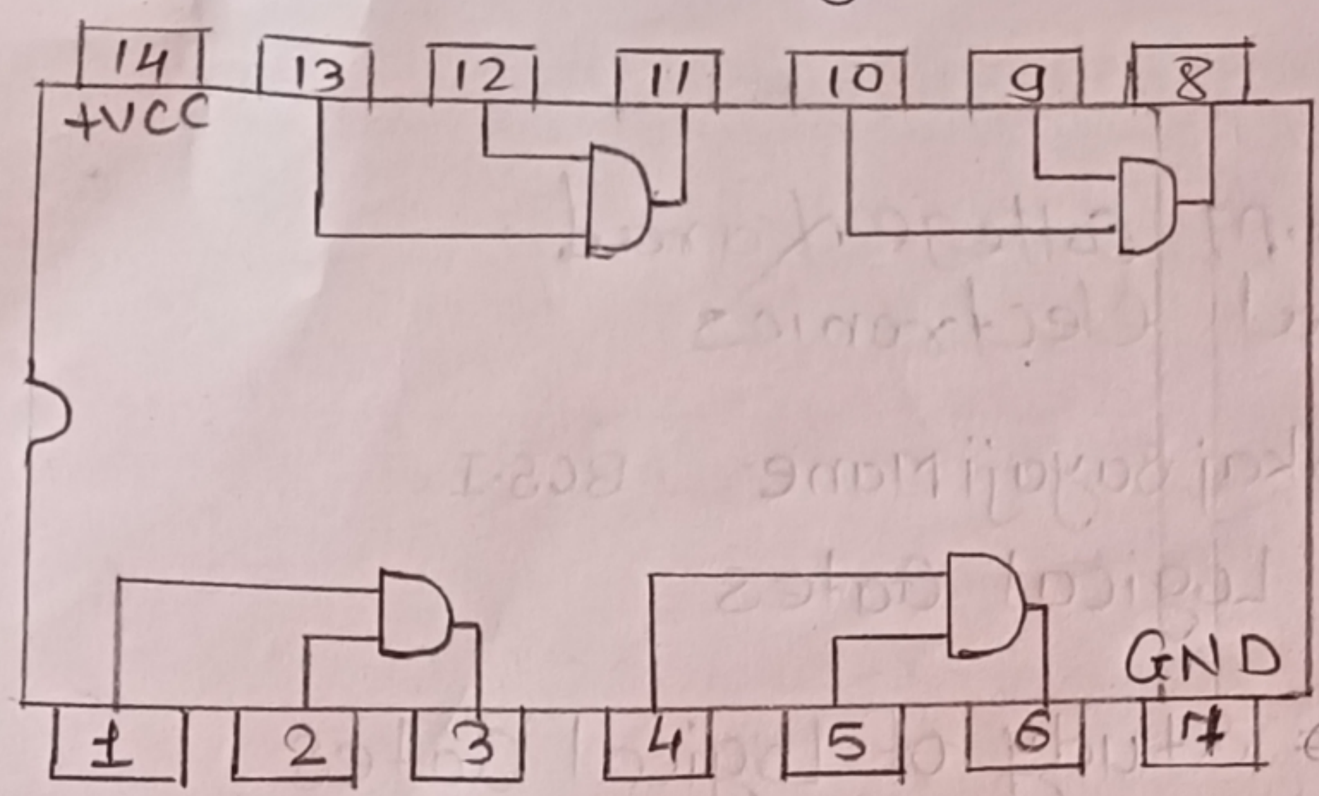

2) OR Gate : OR gate perform Logical addition is known as OR function. both inputs are low when output is Low, otherwise high.

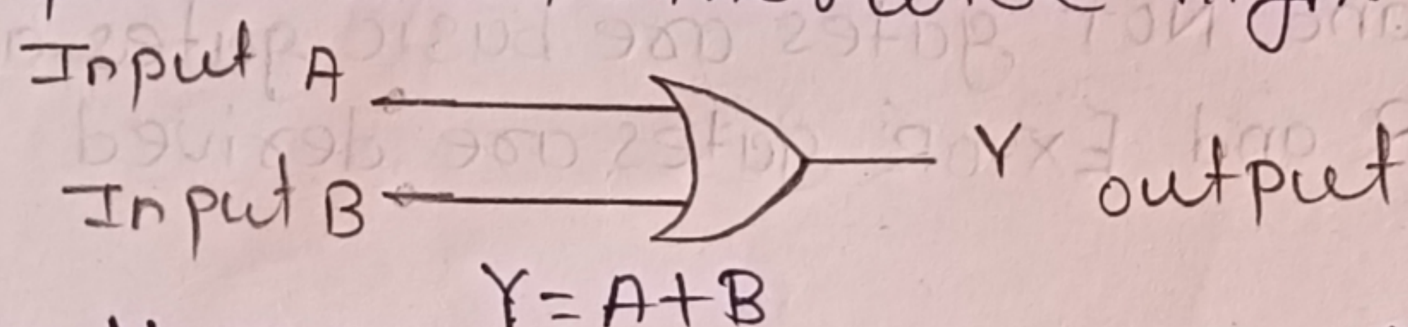

$Y = A + B$

Truth Table :

Inputs		output
A	B	Y
0	0	0
0	1	1
1	0	1
1	1	1

Pinout Diagram :

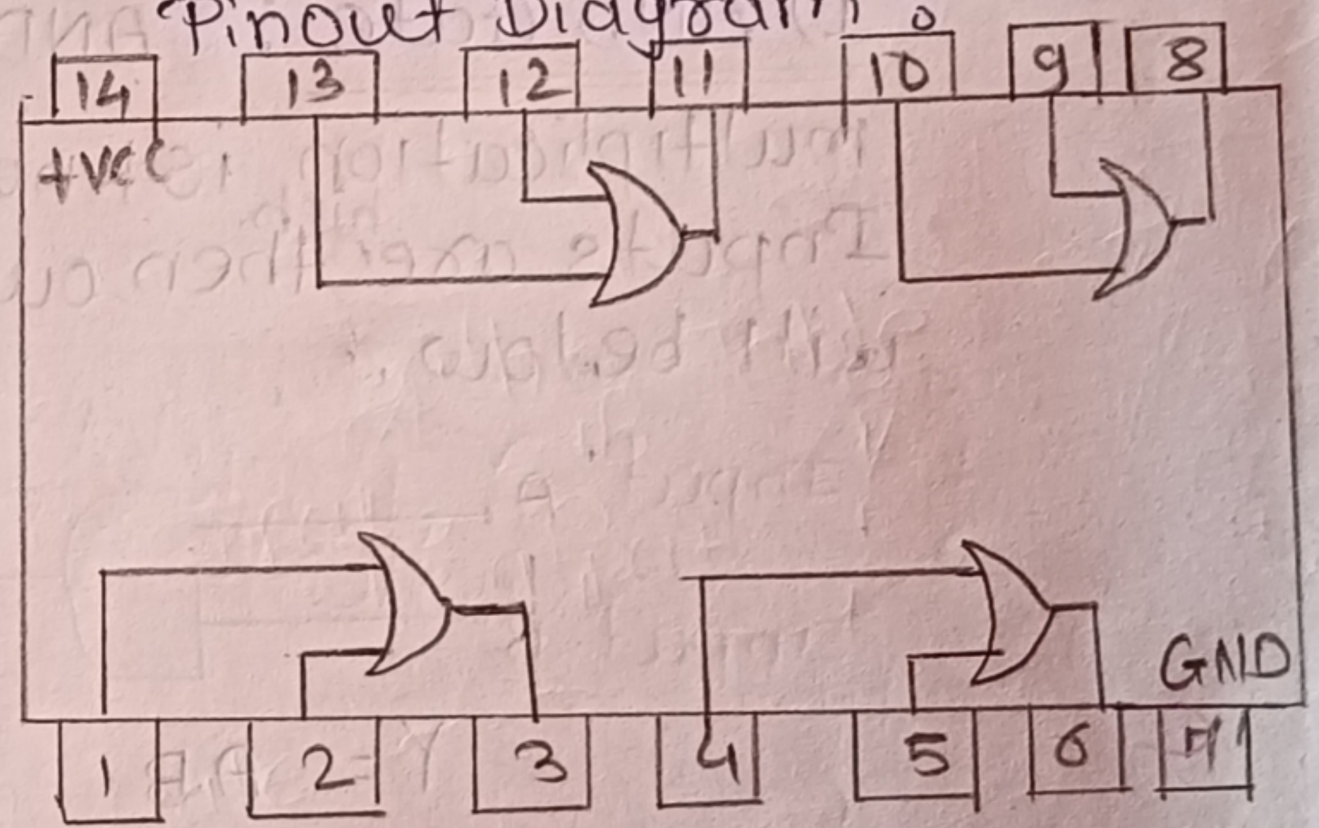

3) NOT Gate : The circuit is also known as inverted if input variable A, the inverted output is written as If input is low then output is high and if output is high is low

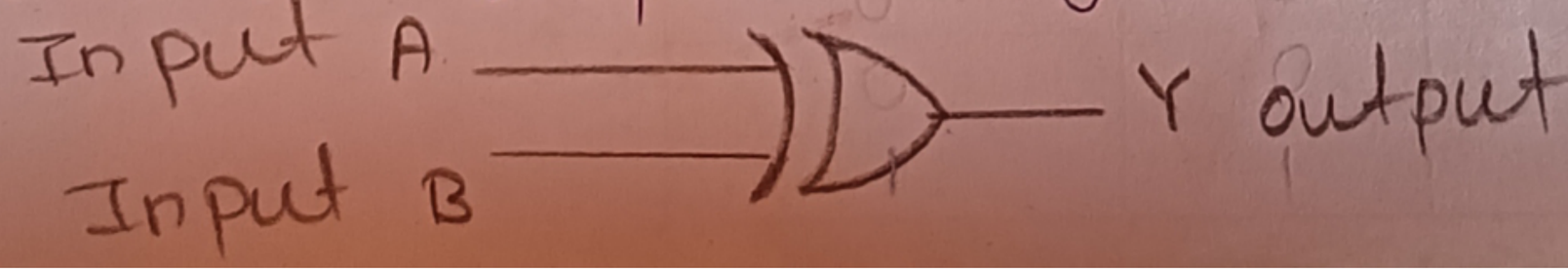

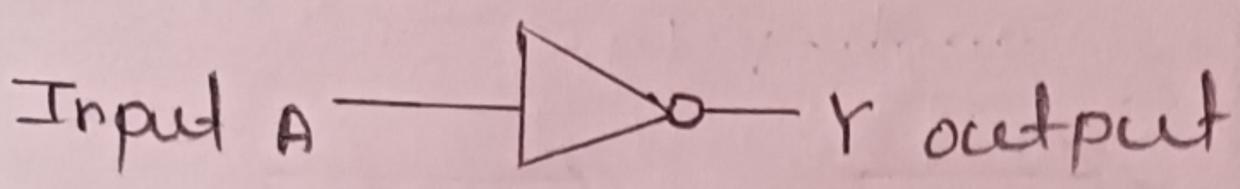

$Y = \overline{A}$

Truth table :

Input A	output Y
0	1
1	0

Pinout Diagram of NOT Gate

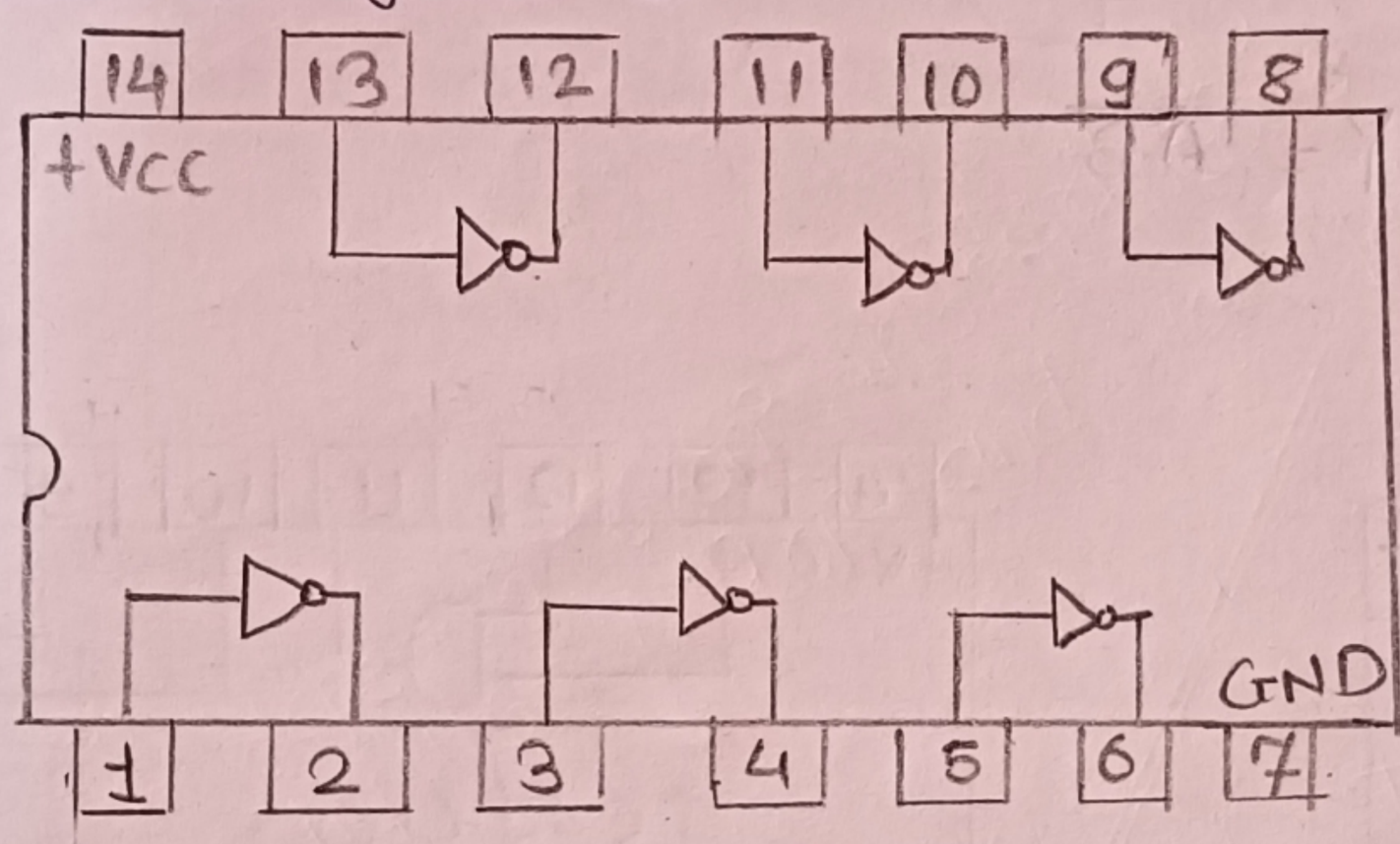

4) NOR Gate : The NOR Gate is NOT + OR Gate which is equivalent to an OR Circuit followed by NOT Circuit. The output of NOR gate is high when both /all inputs are low.

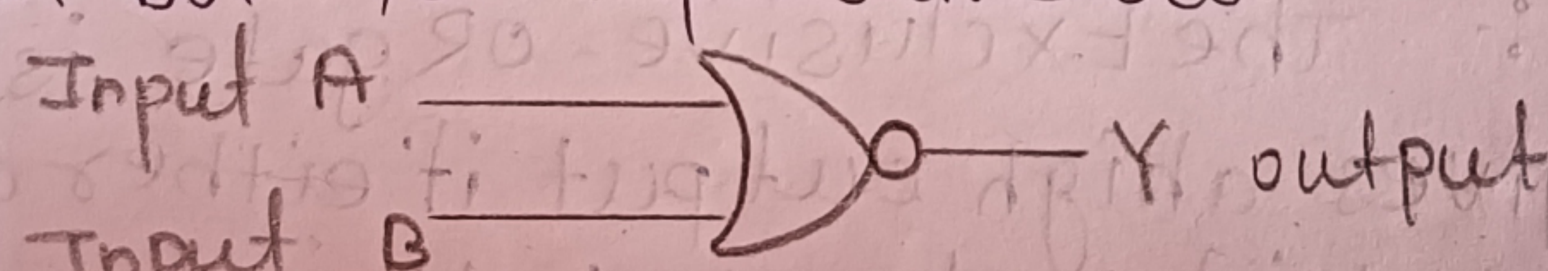

$Y = \overline{A+B}$

Truth table :

Input		output
A	B	Y
0	0	1
0	1	0
1	0	0
1	1	0

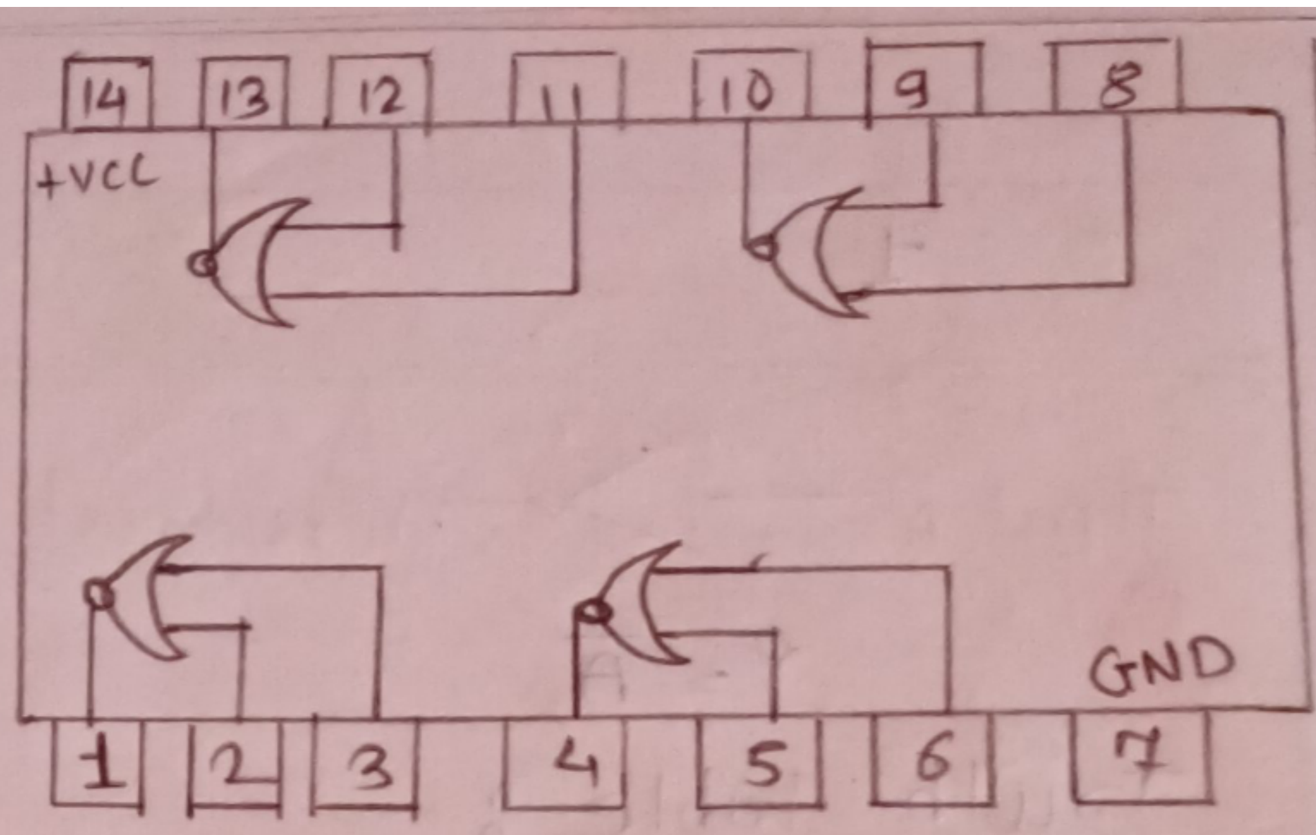

5) **NAND Gate** : The NAND Gate is AND+NOT Gate which is equivalent to AND circuit followed by NOT circuit. NAND gate has low output when Both inputs are high

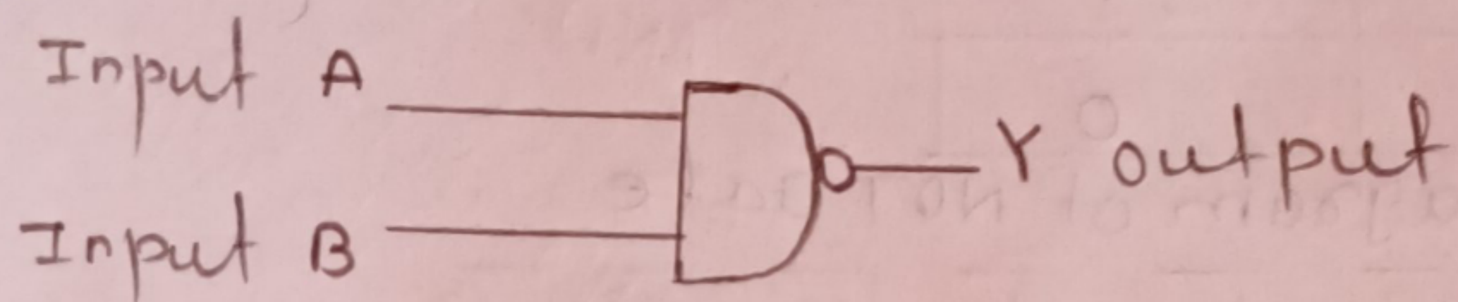

$$Y = \overline{A \cdot B}$$

Truth table :

Input		output
A	B	Y
0	0	1
0	1	1
1	0	1
1	1	0

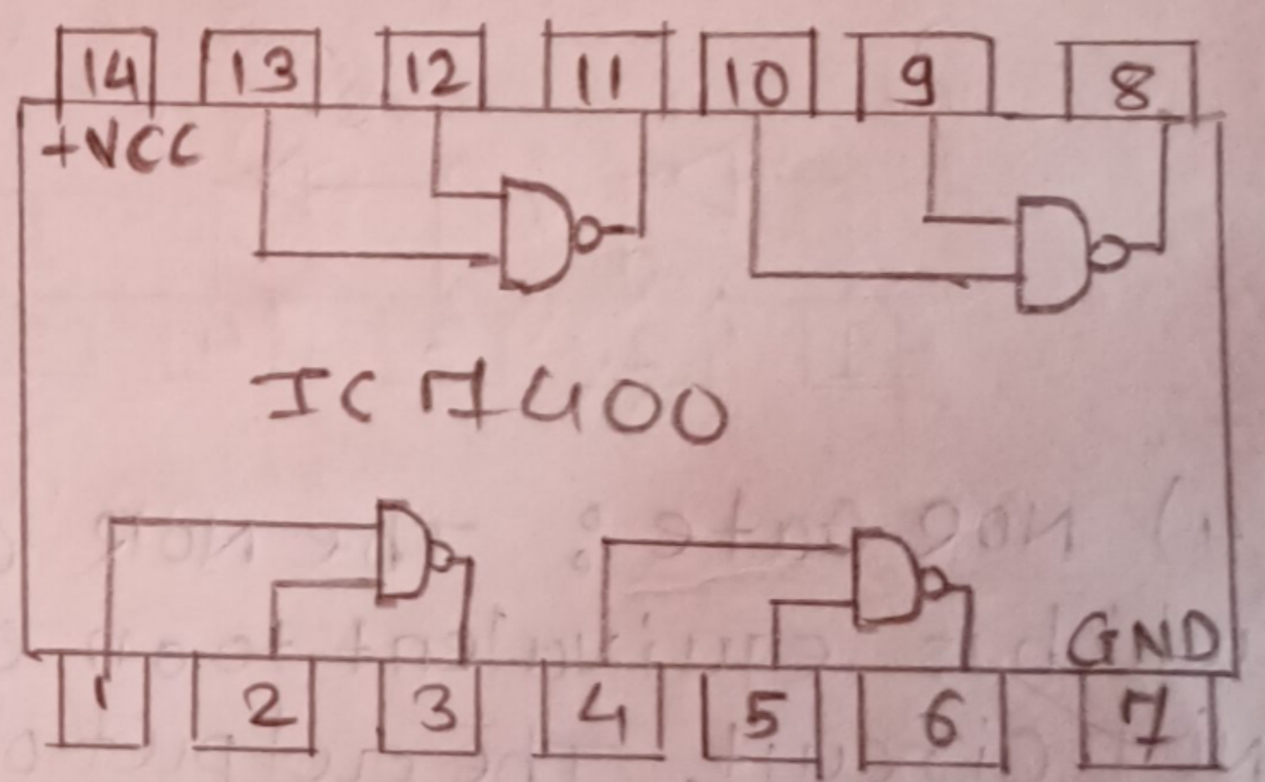

6) **Ex-OR gate** :- The Exclusive-OR gate is a circuit which gives a high output if either of its two inputs is high but not both

Expt. No..... Date: / / 20

Truth table :

Input		output
A	B	Y
0	0	0
0	1	1
1	0	1
1	1	0

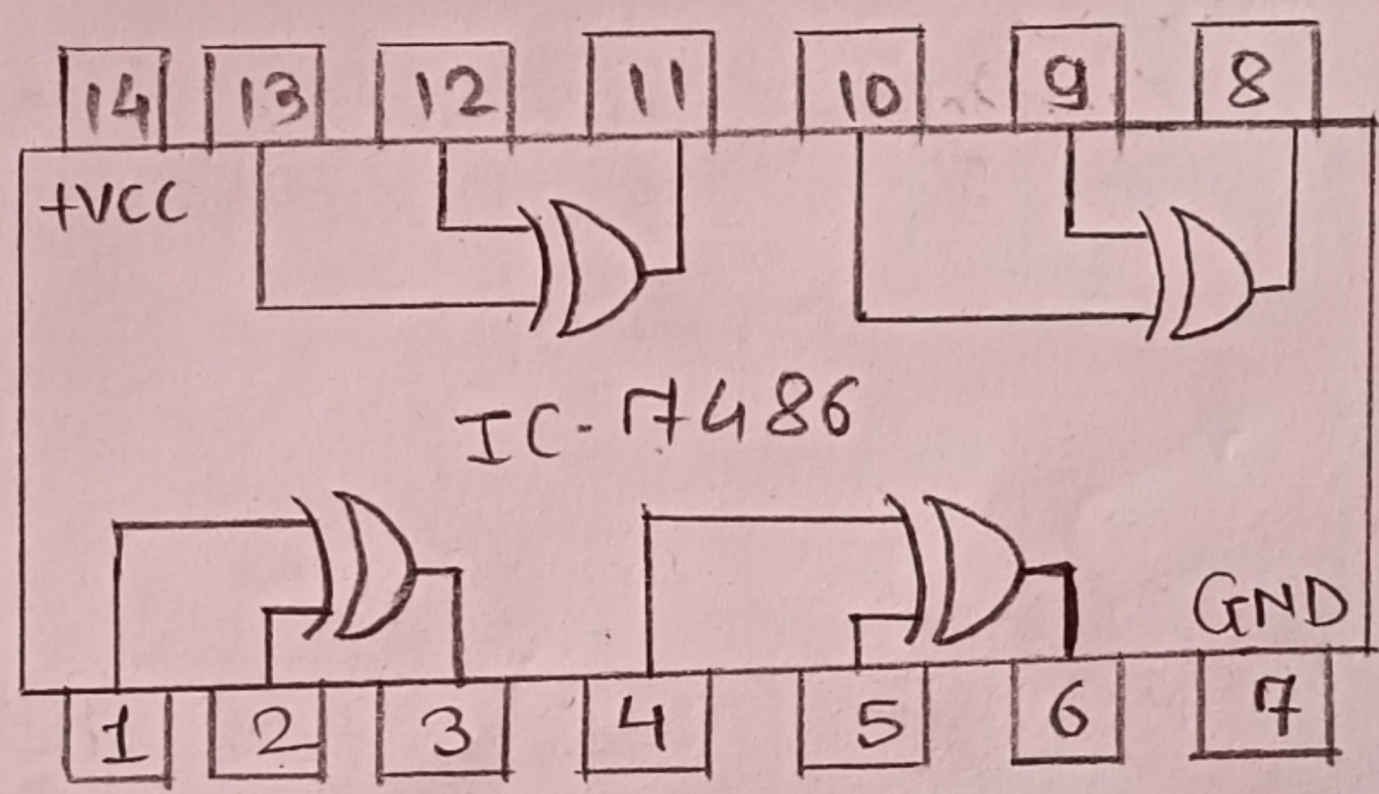

Result :- To study logic gates and hence the operations are verified.