Rayat Shikshan Sanstha's

Name of the college: Sadguru Gadge Maharaj, college, karad.

Subject: Electronic.

Expt. No. 3 | Name: Neha Bhupal shinde Class: BCS II Batch: Roll No.: 78

Date 01/08/2024 | Title of Expt.: R-2R Ladder DAC.

Aim - To study R-2R ladder DAC.

Apparatus - Dual power supply, multimeter, Register etc.

Circuit Diagram -

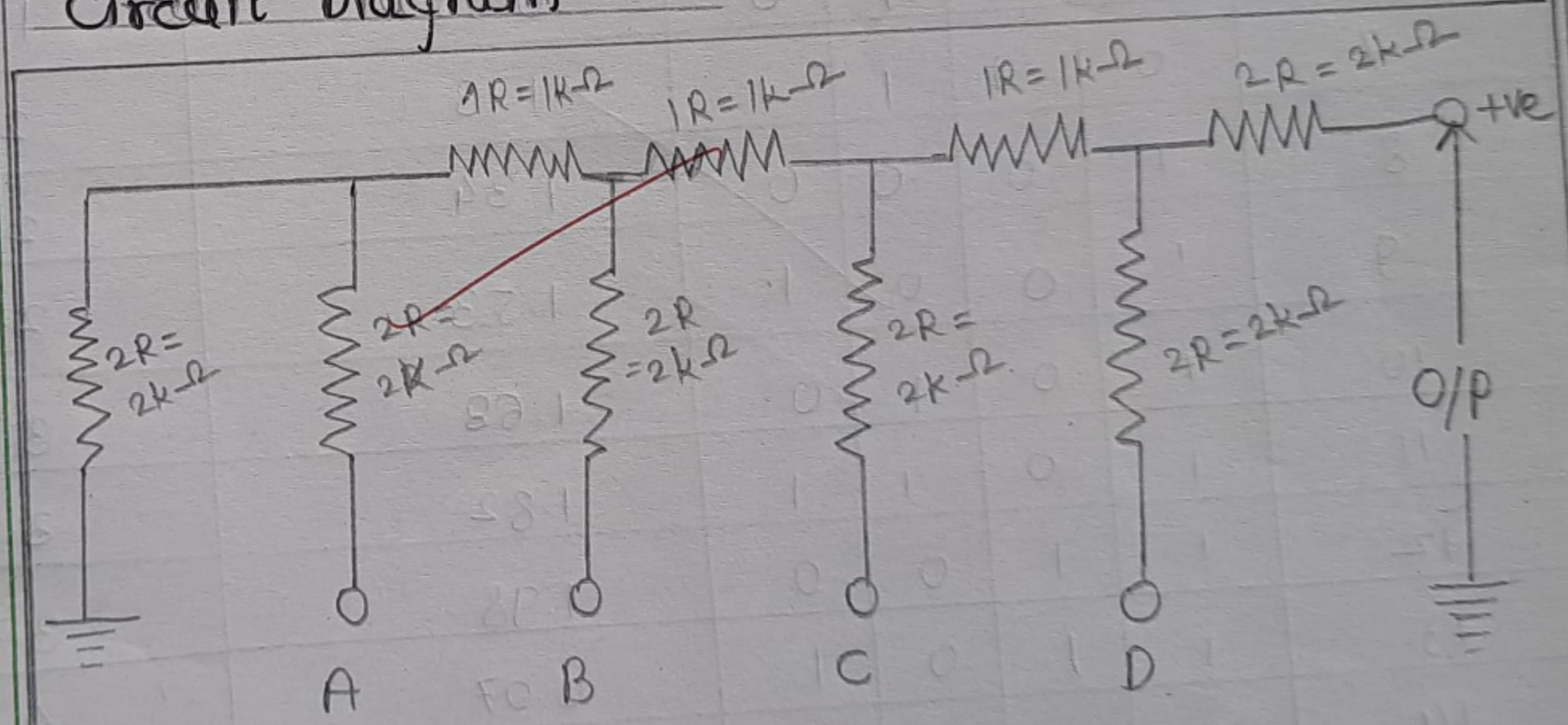

formula -

$$V_o = V_{ref}\,[A.2^{-1} + B.2^{-2} + C.2^{-3} + D.2^{-4}]$$

where,

Vref = Rereference Voltage Applies.

= +5 volt.

calculate, Vo for.

ABCD = 0000 to ~~to~~ 1111

Remarks: C

Signature: 16/10/2024

observation table -

Decimal Number	Digital Input. A	B	C	D	Analog Output observed Vout	calculated vout.
0	0	0	0	0	0	0
1	0	0	0	1	0.23	0.31
2	0	0	1	0	0.38	0.62
3	0	0	1	1	0.50	0.93
4	0	1	0	0	0.72	1.25
5	0	1	0	1	0.88	1.56
6	0	1	1	0	0.98	1.87
7	0	1	1	1	1.13	2.18
8	1	0	0	0	1.34	2.5
9	1	0	0	1	1.53	2.81
10	1	0	1	0	1.68	3.12
11	1	0	1	1	1.82	3.43
12	1	1	0	0	1.98	3.75
13	1	1	0	1	2.07	4.06
14	1	1	1	0	2.32	4.37
15	1	1	1	1	2.51.	4.68.

Result -

To study R-2R ladder i.e, D to A converter

(Digital to Analog converter.

Expt. No. 3 Date: 1/8/2024

calculations-

1) $V_0 = V_{ref}(A.2^{-1} + B.2^{-2} + C.2^{-3} + D.2^{-4})$

$= 5[0.2^{-1} + 0.2^{-2} + 0.2^{-3} + 0.2^{-4}]$

$= 5[0]$

$V_0 = 0.$

2) $V_1 = V_{ref}[A.2^{-1} + B.2^{-2} + C.2^{-3} + D.2^{-4}]$

$= 5[0\times2^{-1} + 0\times2^{-2} + 0\times2^{-3} + 1\times2^{-4}]$

$= 5[0.0625]$

3) $V_2 = V_{ref}[A.2^{-1} + B.2^{-2} + C.2^{-3} + D.2^{-4}]$

$= 5[0\times2^{-1} + 0\times2^{-2} + \cancel{0\times}1\times2^{-3} + 0\times2^{-4}]$

$= 5[0.125]$

$V_2 = 0.625$

4) $V_3 = V_{ref}[A.2^{-1} + B.2^{-2} + C.2^{-3} + D.2^{-4}]$

$= 5[0\times2^{-1} + 0\times2^{-2} + 1\times2^{-3} + 1\times2^{-4}]$

$= 5[0.125 + 0.0625]$

$V_3 = 0.937$

5) $V_4 = V_{ref}[A.2^{-1} + B.2^{-2} + C.2^{-3} + D.2^{-4}]$

$= 5[0\times2^{-1} + 1\times2^{-2} + 0\times2^{-3} + 0\times2^{-4}]$

$= 5[0.25]$

$= 1.25.$

6) $V_5 = V_{ref}\,[A.2^{-1} + B.2^{-2} + C.2^{-3} + D.2^{-4}]$

$= 5\,[0\times2^{-1} + 1\times2^{-2} + 0\times2^{-3} + 1\times2^{-4}]$

$= 5\,[0.25 + 0.625]$

$V_5 = 1.56.$

7) $V_6 = V_{ref}\,[A.2^{-1} + B.2^{-2} + C.2^{-3} + D.2^{-4}]$

$= 5\,[0\times2^{-1} + 1\times2^{-2} + 1\times2^{-3} + 0\times2^{-4}]$

$= 5\,[0.25 + 0.125]$

$V_6 = 1.875$

8) $V_7 = V_{ref}\,[A.2^{-1} + B.2^{-2} + C.2^{-3} + D.2^{-4}]$

$= 5\,[1\times2^{-1} + 1\times2^{-2} + 0\times2^{-3} + 0\times2^{-4}]$

$= 5\,[0.25 + 0.125 + 0.0625]$

$V_7 = 2.187$

9) $V_8 = V_{ref}\,[A.2^{-1} + B.2^{-2} + C.2^{-3} + D.2^{-4}]$

$= 5\,[1\times2^{-1} + 0\times2^{-2} + 0\times2^{-3} + 0\times2^{-4}]$

$= 5\,[0.25]$

$V_8 = 2.5$

10) $V_9 = V_{ref}\,[A.2^{-1} + B.2^{-2} + C.2^{-3} + D.2^{-4}]$

$= 5\,[1\times2^{-1} + 0\times2^{-2} + 0\times2^{-3} + 1\times2^{-4}]$

$= 5\,[0.25 + 0.0625]$

$V_9 = 2.812$

Date: / /20

Expt. No.....

11) $V_{10} = V_{ref}[A.2^{-1} + B.2^{-2} + C.2^{-3} + D.2^{-4}]$

$= 5[1\times2^{-1} + 0\times2^{-2} + 1\times2^{-3} + 0\times2^{-4}]$

$= 5[0.25 + 0.125]$

$V_{10} = 3.125$

12) $V_{11} = V_{ref}[A.2^{-1} + B.2^{-2} + C.2^{-3} + D.2^{-4}]$

$= 5[1\times2^{-1} + 0\times2^{-2} + 1\times2^{-3} + 1\times2^{-4}]$

$= 5[0.5 + 0.125 + 0.0625]$

$V_{11} = 3.437$

13) $V_{12} = V_{ref}[A.2^{-1} + B.2^{-2} + C.2^{-3} + D.2^{-4}]$

$= 5[1\times2^{-1} + 1\times2^{-2} + 0\times2^{-3} + 0\times2^{-4}]$

$= 5[0.5 + 0.25]$

$V_{12} = 3.75$

14) $V_{13} = V_{ref}[A.2^{-1} + B.2^{-2} + C.2^{-3} + D.2^{-4}]$

$= 5[1\times2^{-1} + 1\times2^{-2} + 0\times2^{-3} + 1\times2^{-4}]$

$= 5[0.5 + 0.25 + 0.0625]$

$V_{13} = 4.06$

15) $V_{14} = V_{ref}[A.2^{-1} + B.2^{-2} + C.2^{-3} + D.2^{-4}]$

$= 5[1\times2^{-1} + 1\times2^{-2} + 1\times2^{-3} + 0\times2^{-4}]$

$= 5[0.5 + 0.25 + 0.125]$

$V_{14} = 4.375$

16) $V_{15} = V_{ref}\,[A.2^{-1} + B.2^{-2} + C.2^{-3} + D.2^{-4}]$

$= 5\,[1\times 2^{-1} + 1\times 2^{-2} + 1\times 2^{-3} + 1\times 2^{-4}]$

$= 5\,[0.5 + 0.25 + 0.125 + 0.0625]$

$V_{15} = 4.687$