Rayat Shikshan Sanstha's

Page No.:

Name of the college : S.G.M Collage karad

Subject: Digital Electronics

Expt. No.

Date

Name : Pankaj Mane Class: BCS-I Batch: Roll No.: 12

Title of Expt.: Basic gates Using NAND gate

Aim : Study of ~~NAND~~ Basic gate Using NAND gate.

NAND Gate: The NAND gate is a NOT-AND circuit which is equivalent to AND circuit followed by NOT circuit The output of NAND gate is high if any of its input is Low.

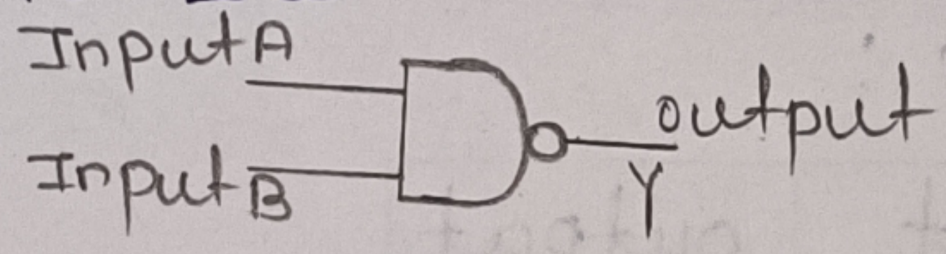

$$Y = \overline{A \cdot B}$$

Truth table :

Input		output
A	B	Y
0	0	1
0	1	1
1	0	1
1	1	0

The 'NAND' gate and 'NOR' gates are Universal gates.

C

Remarks

21/10/23

Signature

1) Implimenting NOT Gate Using NAND gates :-

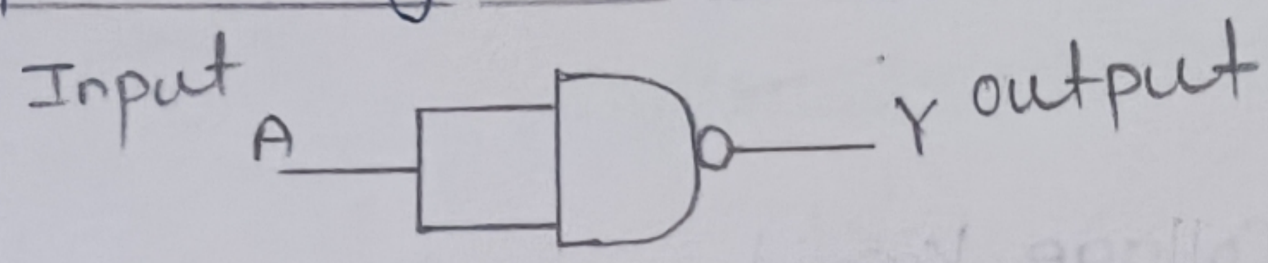

$Y = \overline{A}$

: Truth table

A	Y
0	1
1	0

2) Implimenting AND gate using NAND gate.

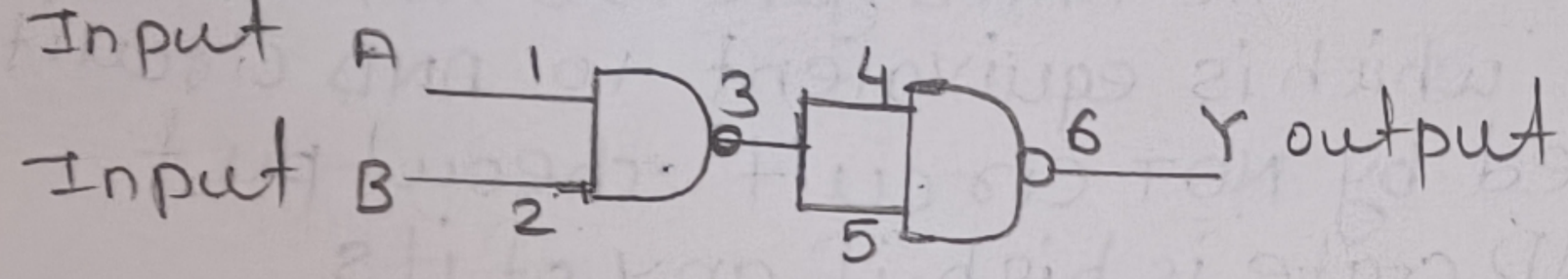

$Y = AB$

Truth table :

Input		output
A	B	Y
0	0	0
0	1	0
1	0	0
1	1	1

3) Implimenting or gate Using NAND gate

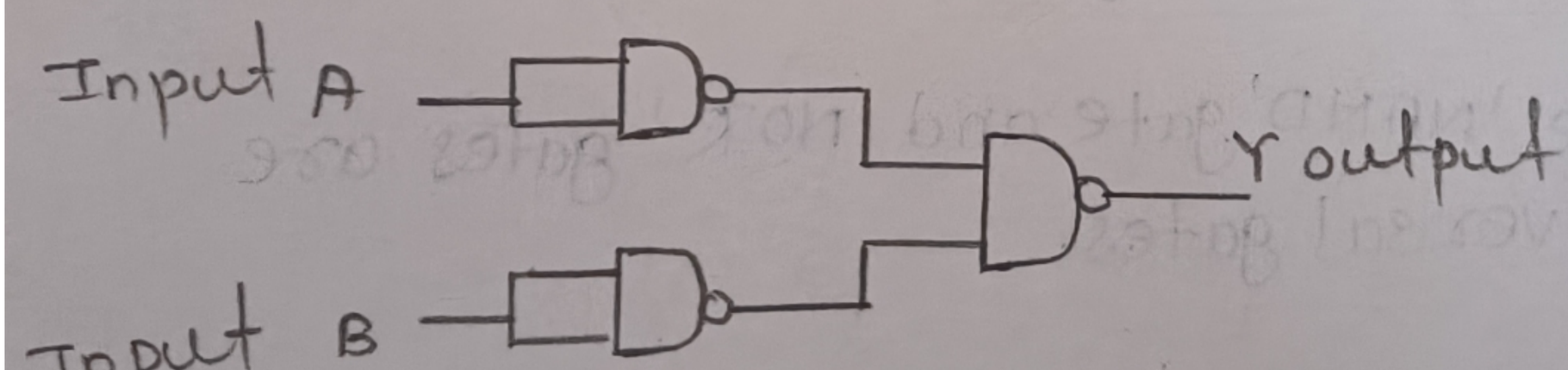

$Y = A+B$

Expt. No.....

Date: / / 20

Truth table :-

Input		output
A	B	Y
0	0	0
0	1	1
1	0	1
1	1	1

Implimenting NOR gate Using NAND gate :-

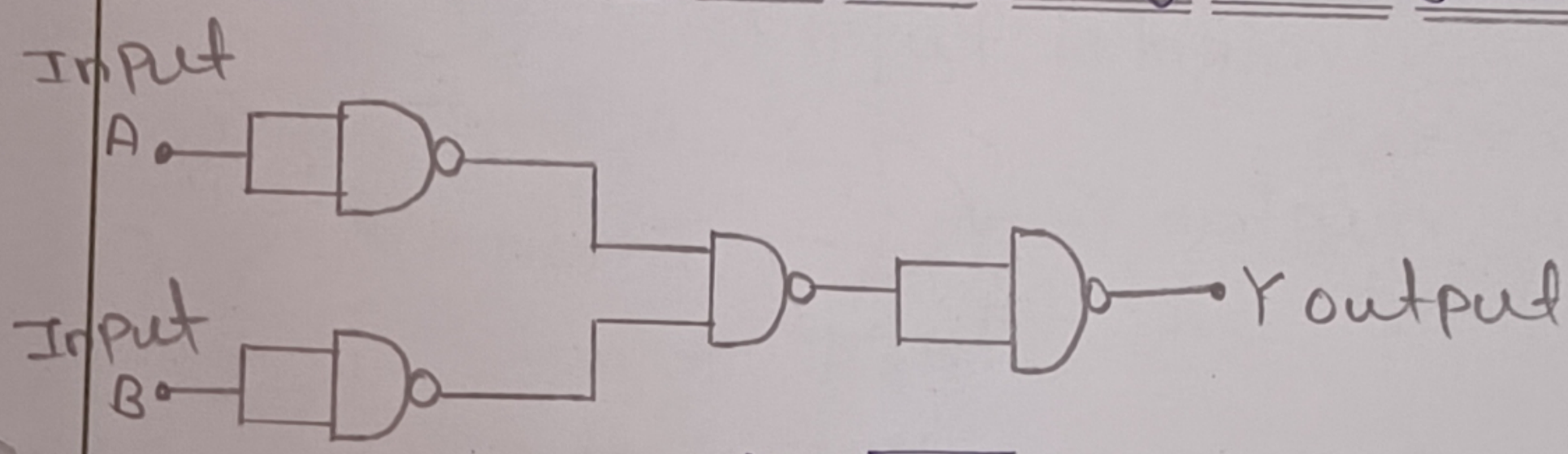

$$Y = \overline{A+B}$$

Truth table

Input		output
A	B	Y
0	0	1
0	1	0
1	0	0
1	1	0

Result : to study Basic gates using NAND gate hence operations are verified