CAD Tool Warm-Up and Macro Circuit Modeling

Project #1.1

PLL Design

The PLL model (as shown in figure 2) was designed using four components: a phase detector, a frequency divider, a loop filter and a VCO (voltage-controlled oscillator). The schematics of each of those components are shown below in figures 1.1-1.4. In each of these schematics, a voltage-controlled voltage source with an e-gain of 1 is the representation of a node. These are present in figures 1.1, 1.3, and 1.4 and represent the injections of N1, N2, and N3 into the system. These components were designed with the nodes present in their schematics in order to simplify the final design of the PLL model.

Figure 1.1: Phase Detector Component Schematic

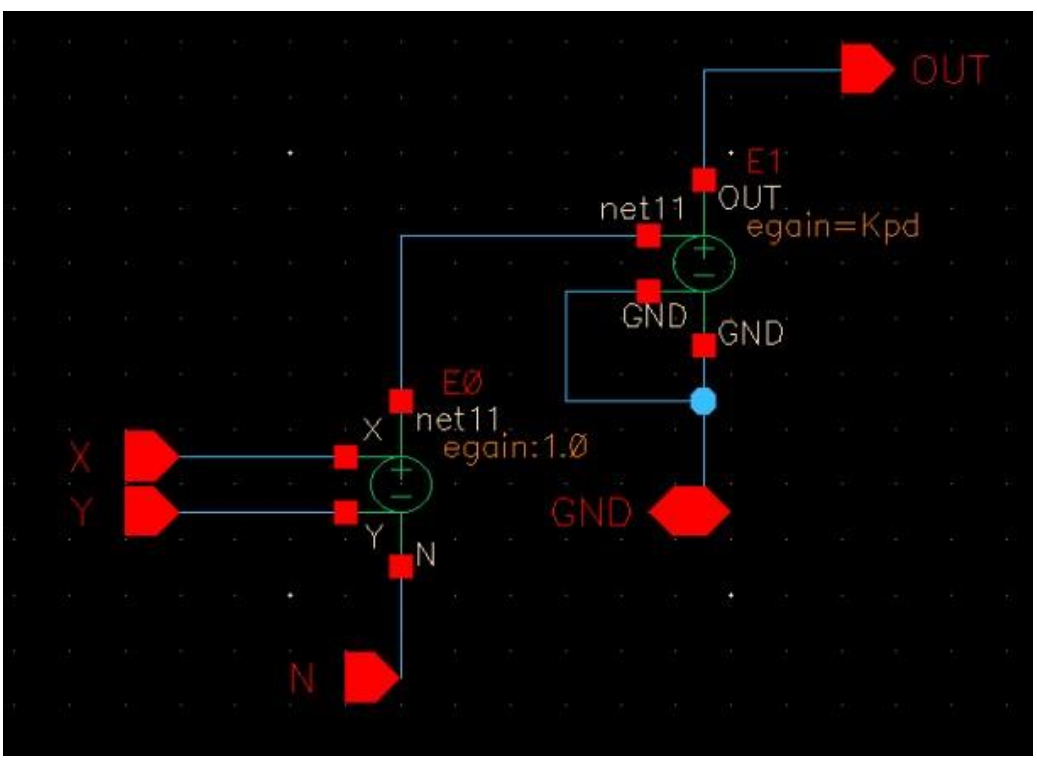

1.2: Frequency Divider Component Schematic

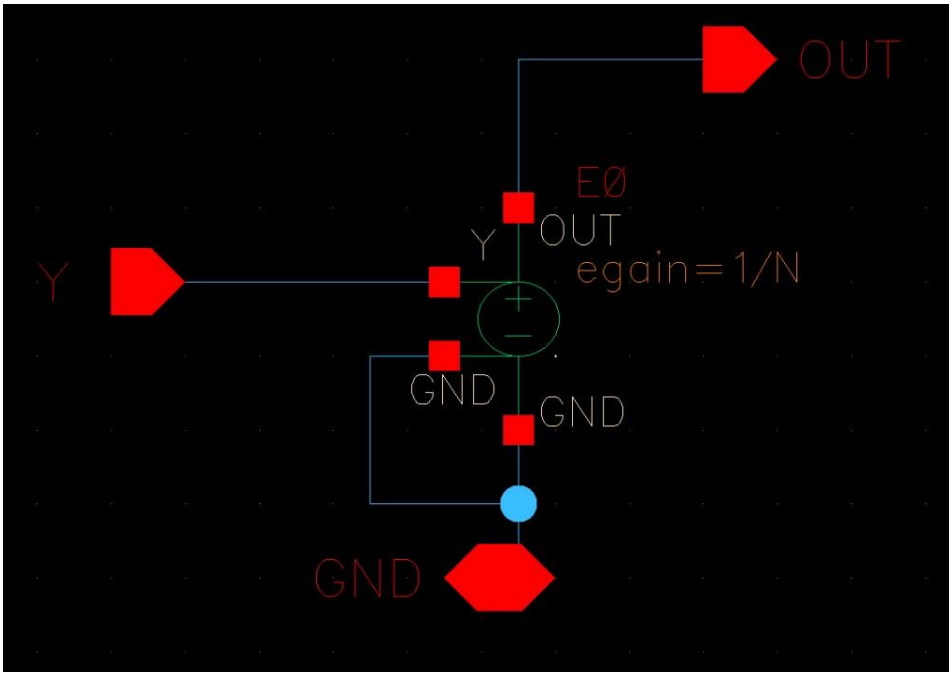

Figure 1.3: Loof Filter Component Schematic

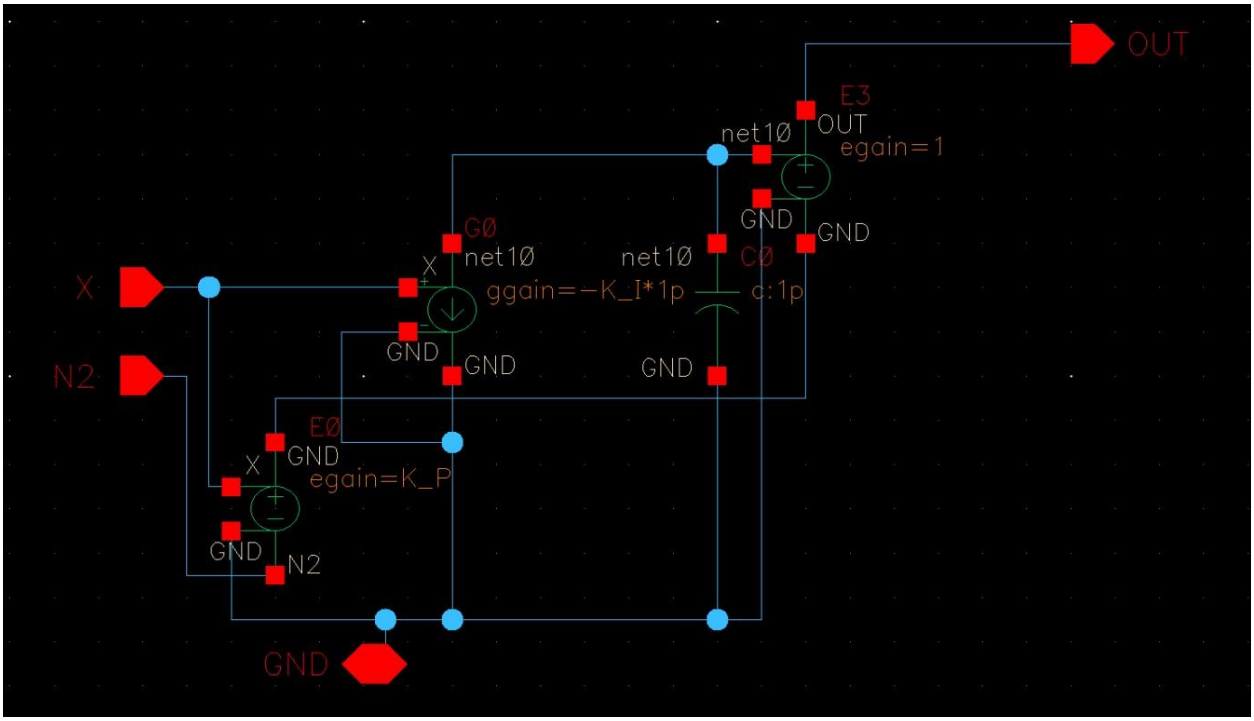

Figure

1.4: VCO (with N3 node) Component Schematic

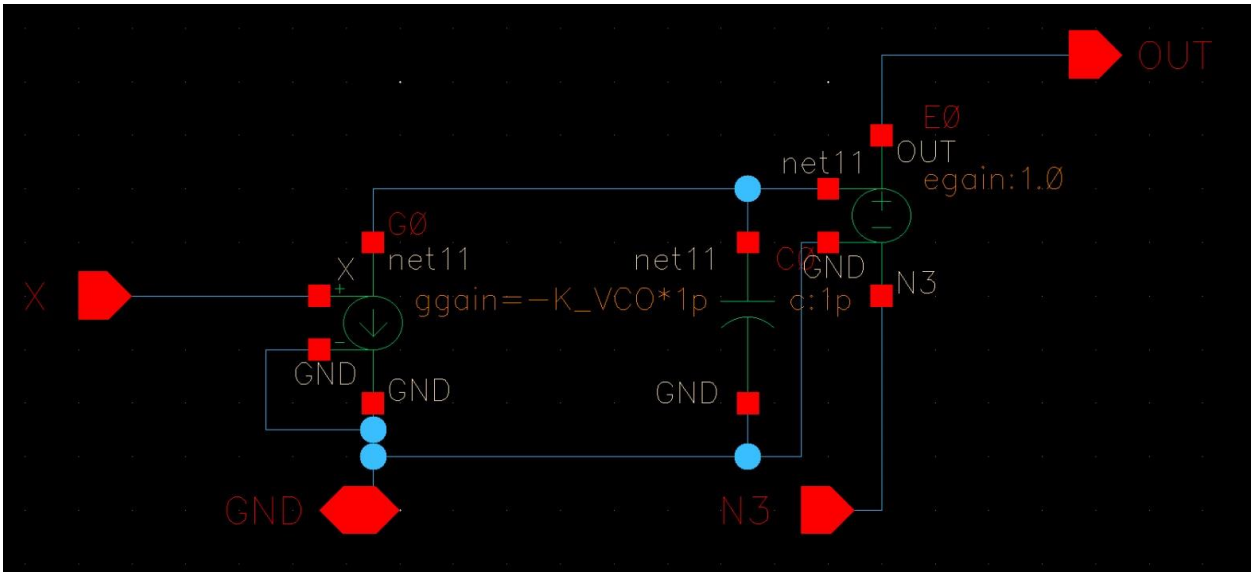

Figure 2: Schematic of PLL model with all integrated components

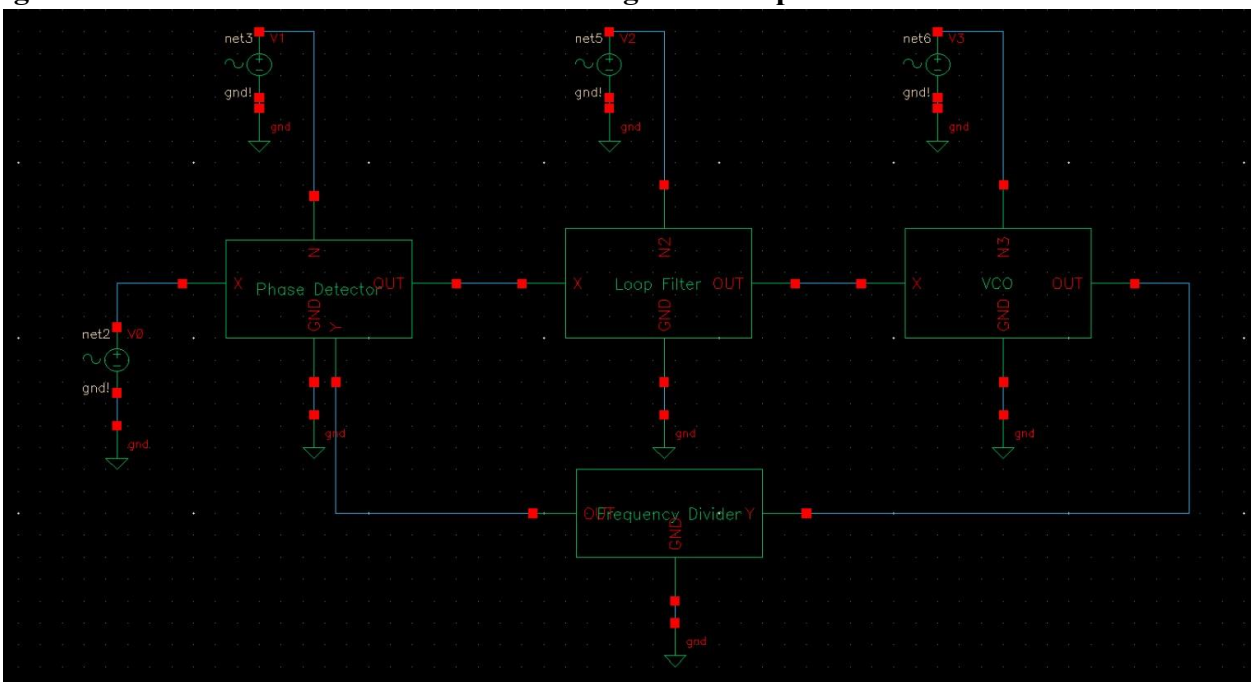

3.1: AC Gain and Phase Plots for H(s) = Y(s)/X(s)|N1=N2=N3=0

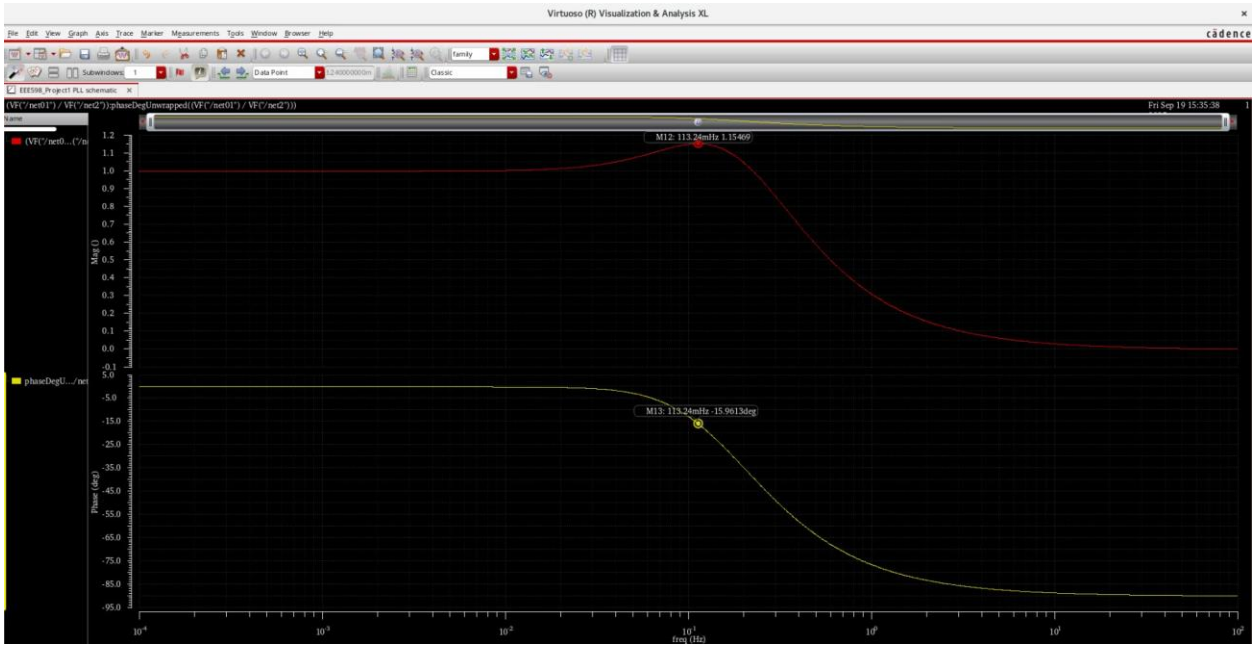

Figure 3.2: AC Gain and Phase Plots for HN1(s) = Y(s)/X(s)|X=N2=N3=0

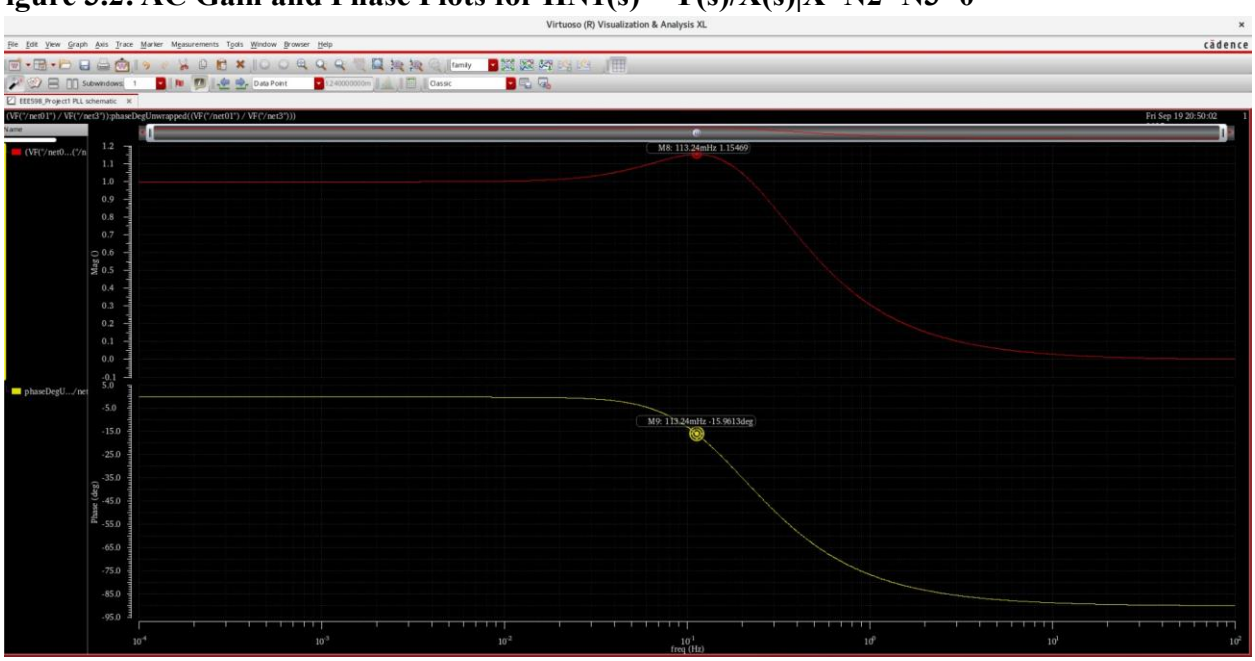

Figure

Figure 3.3: AC Gain and Phase Plots for HN2(s) = Y(s)/X(s)|X=N1=N3=0

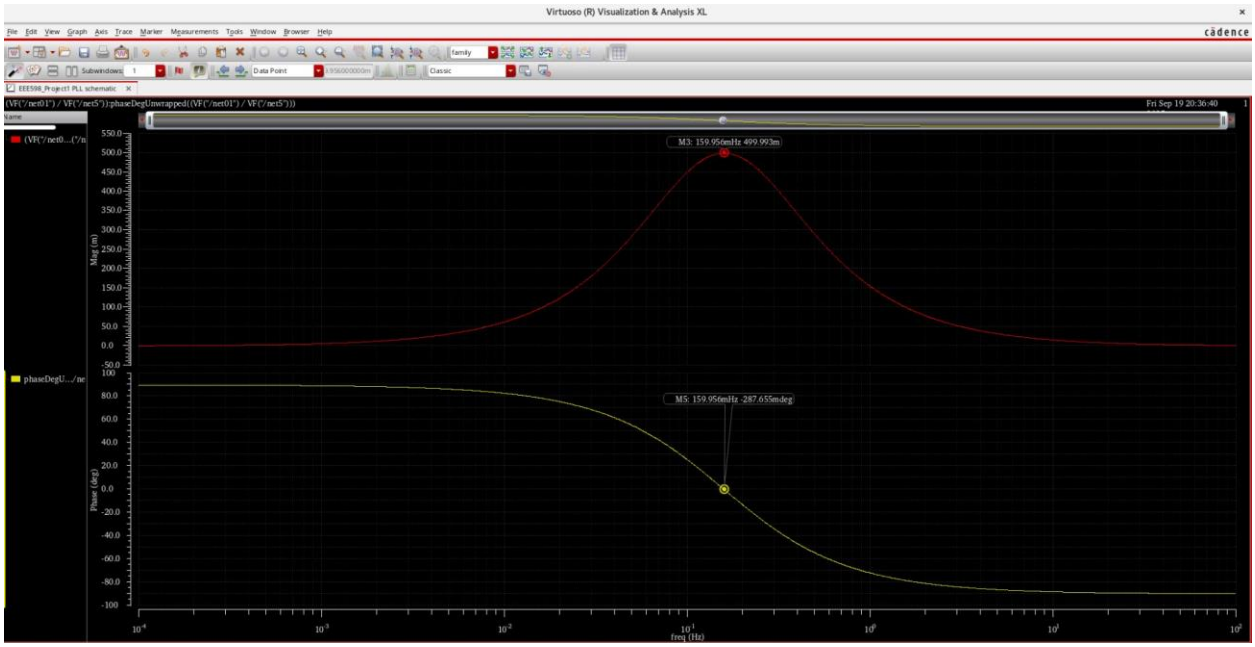

Figure 3.4: AC Gain and Phase Plots for HN3(s) = Y(s)/X(s)|X=N1=N2=0

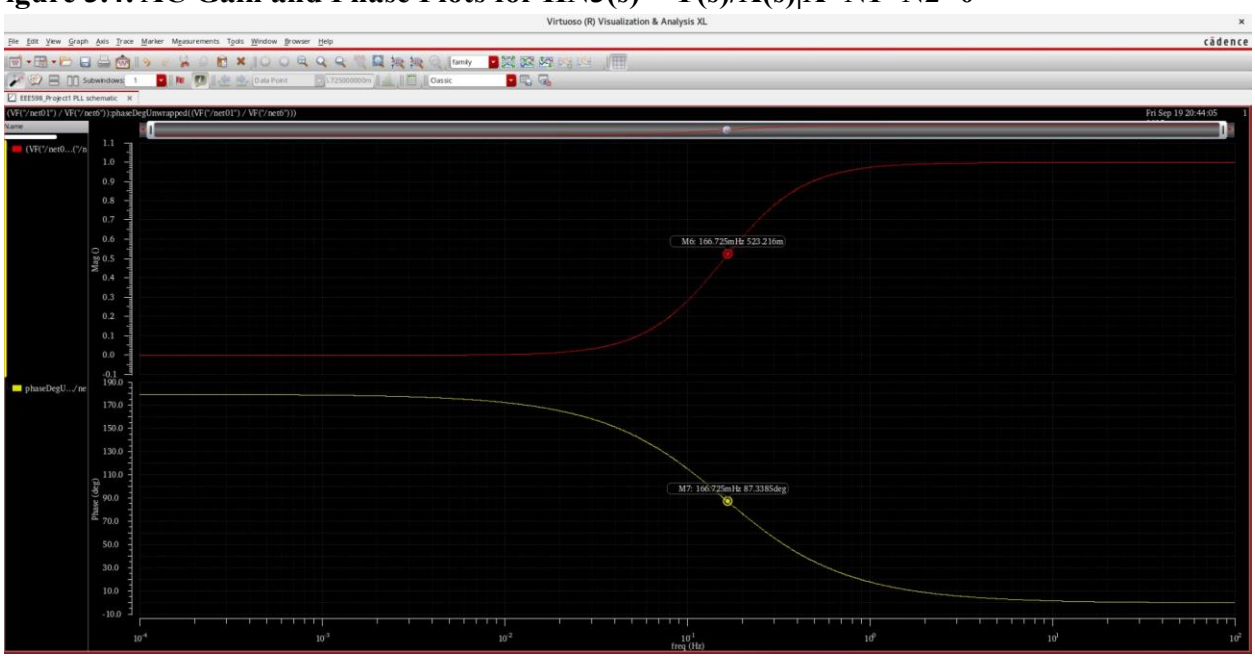

Project# 1.2

Differential Input, Single Out Opamp Design

This is the single output opamp circuit using macro models. Calculation of the values is given in the next page, The design was done using VCVS, resistor and capacitors. The value of poles is set accordingly by varying the R and C.

Figure 4.1: Design for Macro-model for a differential input, single output opamp with DC gain of 10000 and UGF of 200MHz.

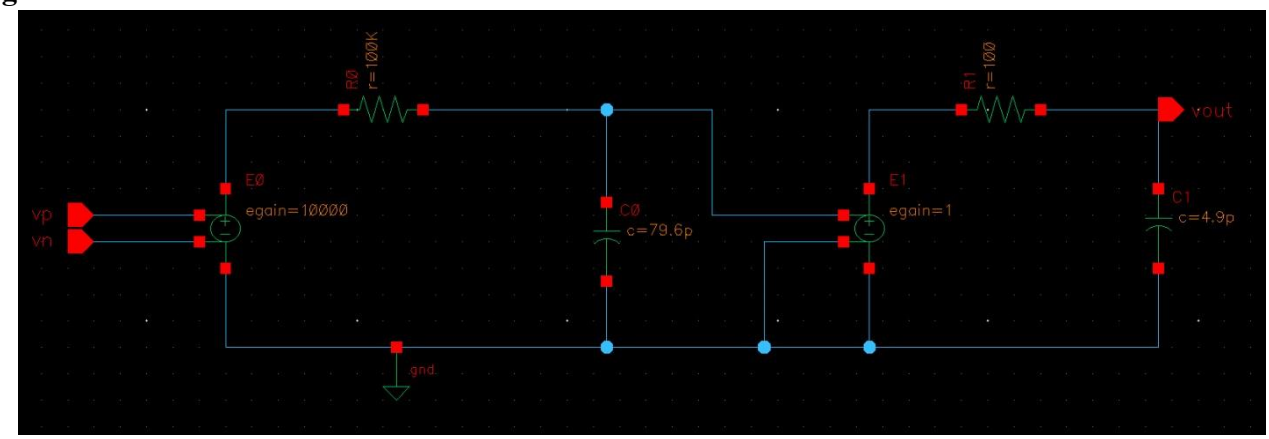

Phase margin = 60degree
DC gain = 10000 UGF
= 200MHz.

Figure 4.2: Symbol for the differential input, single output opamp

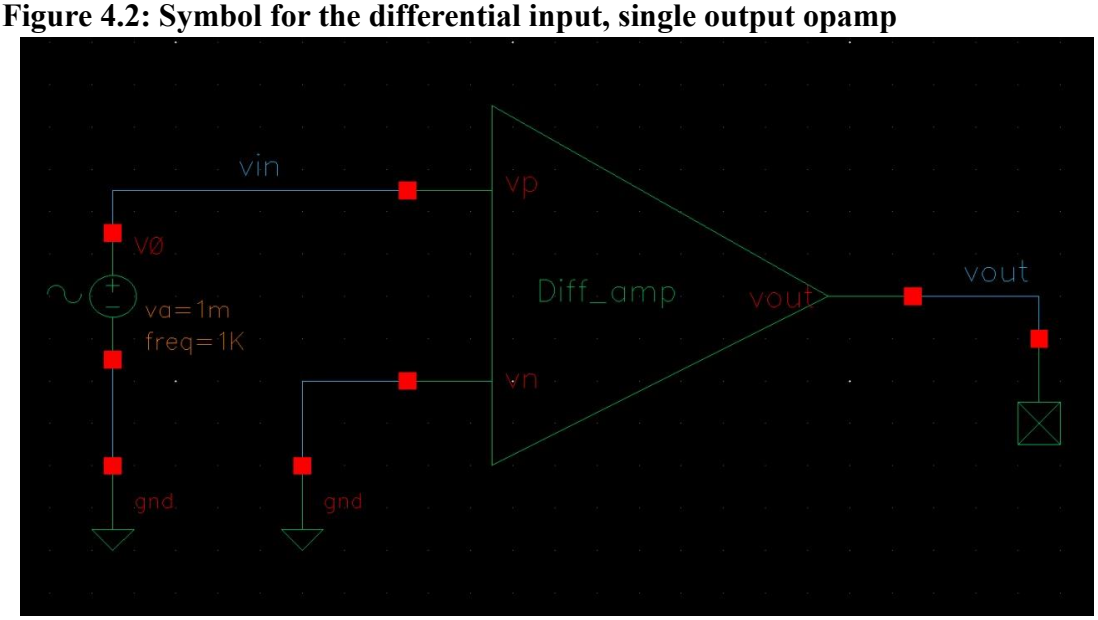

Figure 4.3: Magnitude and phase plots for the differential input, single output opamp

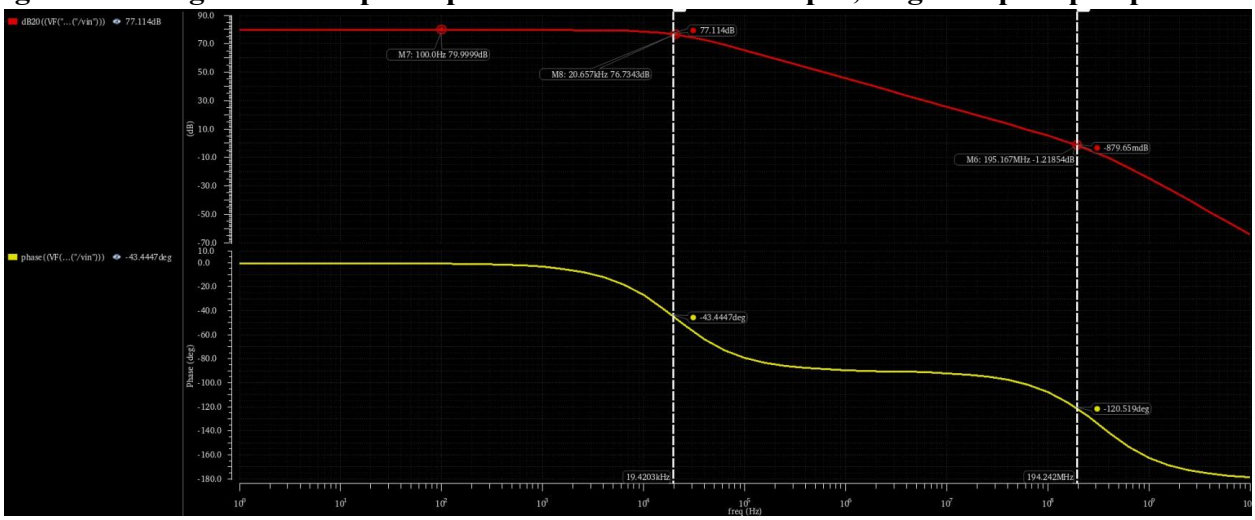

Phase margin = 60degree
DC gain = 10000 UGF
= 200MHz.

Figure 4.4: Calculations

$A = 80dB$

$= 10000\ V/V$

$f_{ugb} = 200M$

$A \times f_1 = f_{ugb}$

$10^4 \times \frac{1}{2\pi RC} = 200M$

$RC = 7.95M$

$\boxed{\text{Let } R_1 = 100K}$

$\boxed{C_1 = 79.517pF}$

$PM = 60^\circ$

$PM = 180 - \tan^{-1}\left(\frac{\omega_{ugb}}{\omega_{p1}}\right) - \tan^{-1}\left(\frac{\omega_{ugb}}{\omega_{p2}}\right)$

$60 = 180 - 90^\circ - \tan^{-1}\left(\frac{200M}{\omega_{p2}}\right)$

$30 = \tan^{-1}\left(\frac{200M}{\omega_{p2}}\right)$

$\omega_{p2} = 200M \times \sqrt{3}$

$\frac{1}{2\pi R_2 C_2} = 200M \times \sqrt{3}$

$\boxed{R_2 = 100 \quad C_2 = 4.9p}$

Fully Differential Opamp Design

This is the fully differential output opamp circuit using macro models. The design was done using VCCS , VCVS, resistor and capacitors. The value of poles is set accordingly by varying the R and C to get Phase margin = 60 degrees, DC gain = 10000, and UGF = 200MHz.

Figure 5.1: Design for Macro-model for a differential input, differential output opamp with DC gain of 10000 and UGF of 200MHz circuit.

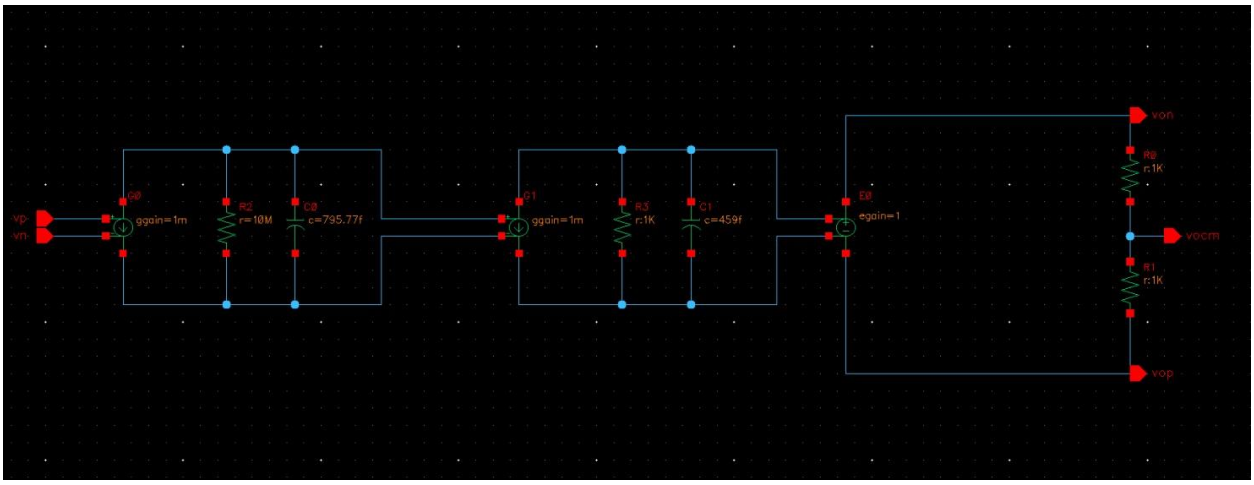

Figure 5.2: Symbol for the differential input, differential output opamp

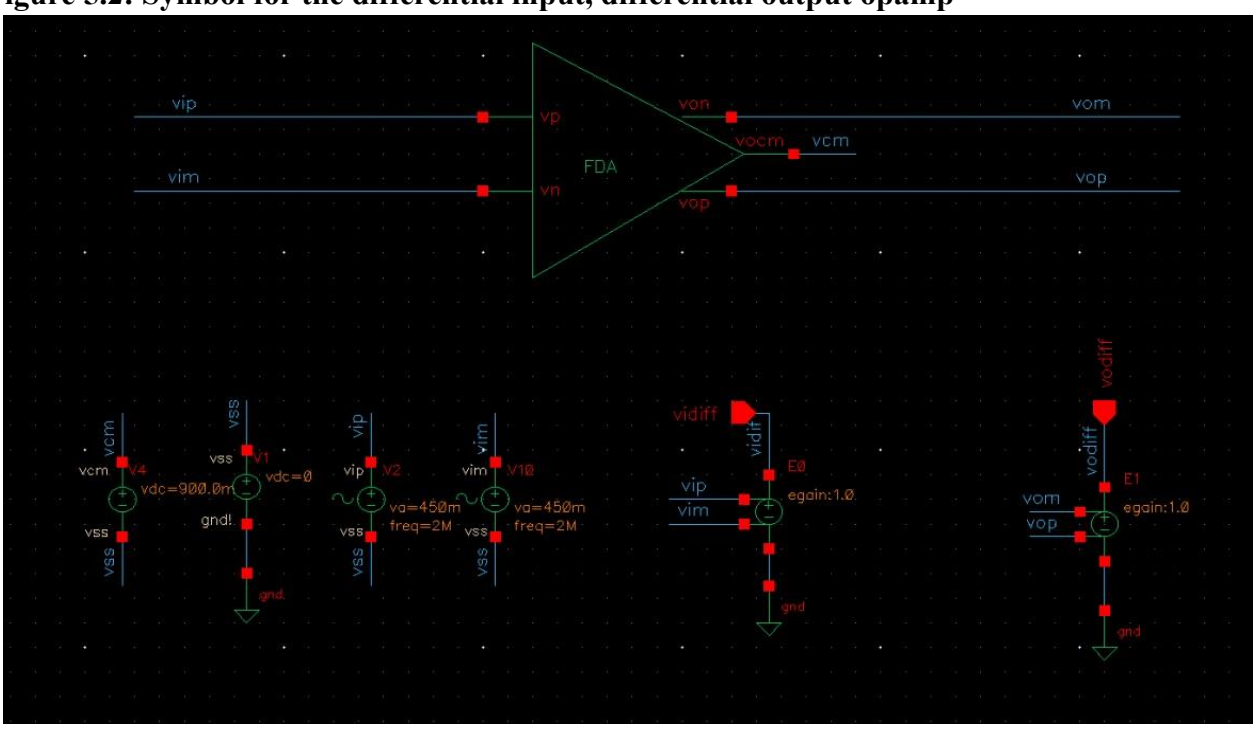

Figure 5.3: Magnitude and phase plots for the differential input, differential output opamp

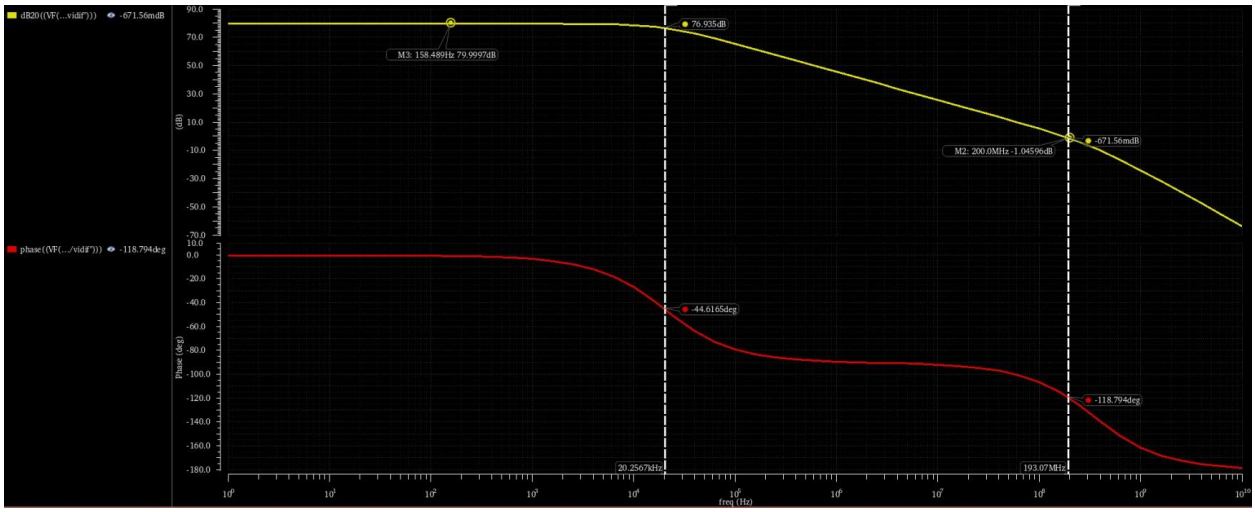

Phase margin = 60degree
DC gain = 10000 UGF
= 200MHz.