CMOS -MULTIPLIER BASED CONSTANT-GM CURRENT REFERENCE

Current Mirrors

NAME: Pankaj Subhash Wavre

Design 1:

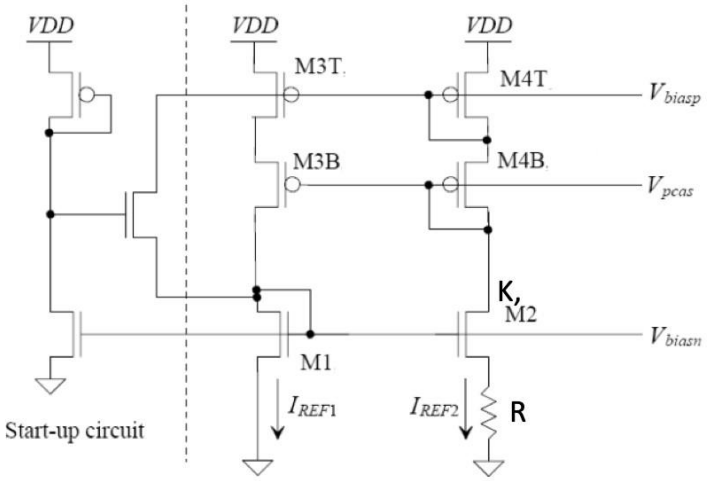

Schematic:

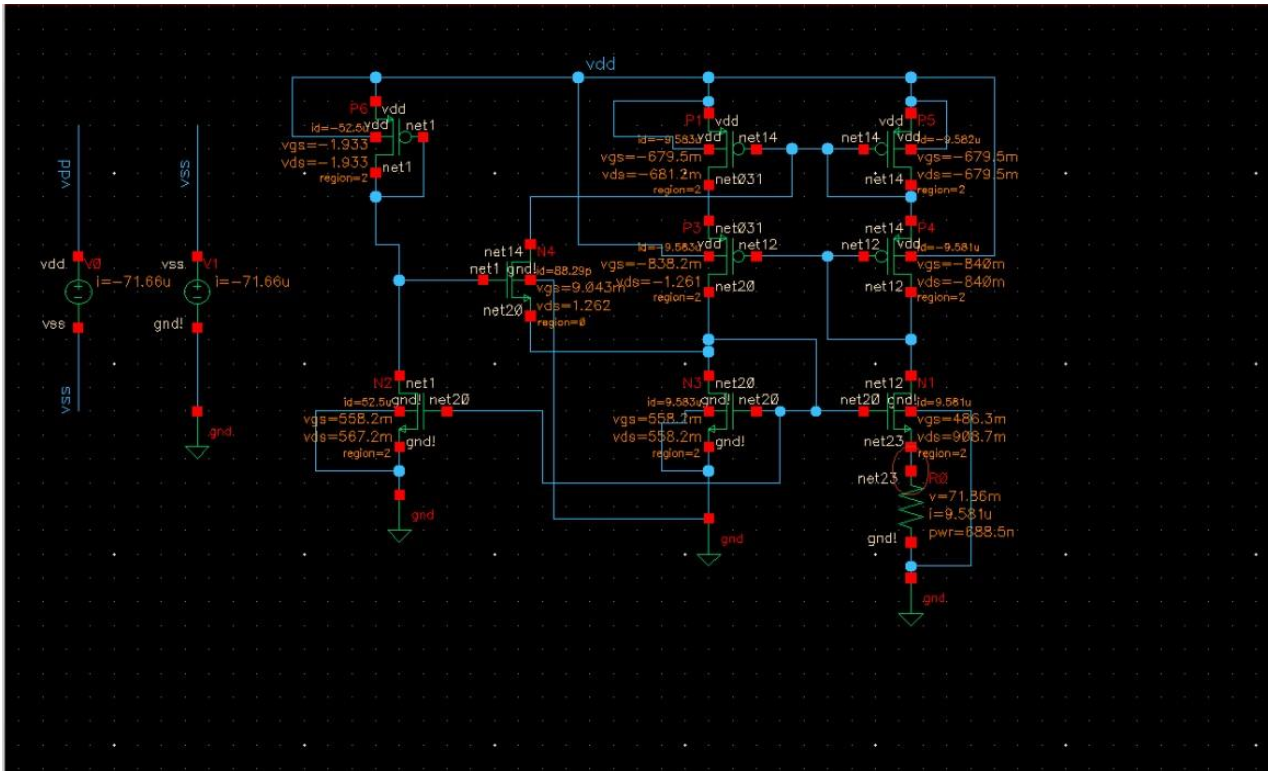

Parameter	Min	Nom	Max
VDD	2.0V	2.5V	3.0V
I_{ref1}, I_{ref2}	9.393uA	10.242uA	11.05uA

Resistance (R) = 7.22K **1.**

Device Parameters:

Device	W	Fingers	L	|Vgs-Vt| (V)	|Vds| (V)	|Ibias| (uA)
M1	4.425um	2	600nm	0.061	0.5611	10.01
M2	4.425um	2	600nm	0.012	0.9009	9.999
M3T	12.0 um	2	600nm	0.182	0.6848	10.01
M3B	12.0 um	2	600nm	0.342	1.254	10.01
M4T	12.0 um	2	600nm	0.1828	0.6828	9.999
M4B	12.0 um	2	600nm	0.3441	0.8441	9.999
MSUP	67.2 um	2	48.0 um	1.462	1.962	54.4
MSUN	24.0 um	2	600nm	0.061	0.5384	54.4
MSU3	24.0 um	2	600nm	0.061	1.256	43.37p

Plot I_{ref1} VS V_{DD} (200mV increments from 2V to 3V).

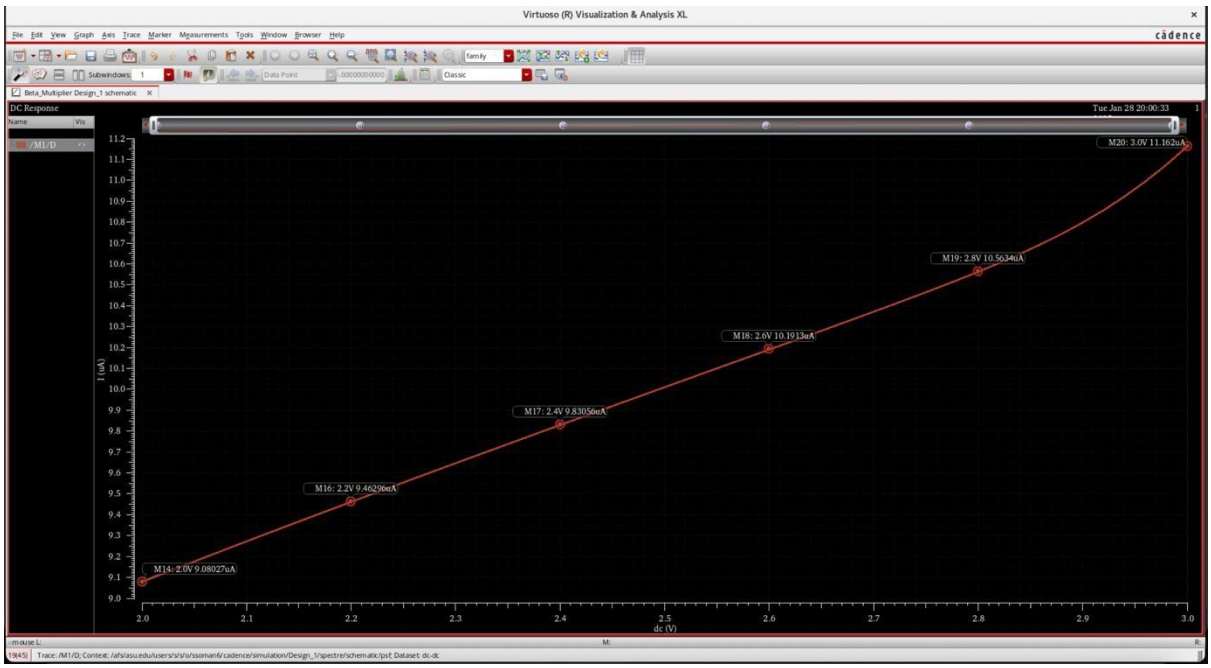

Plot I_{ref2} VS V_{DD} (200mV increments from 2V to 3V).

``

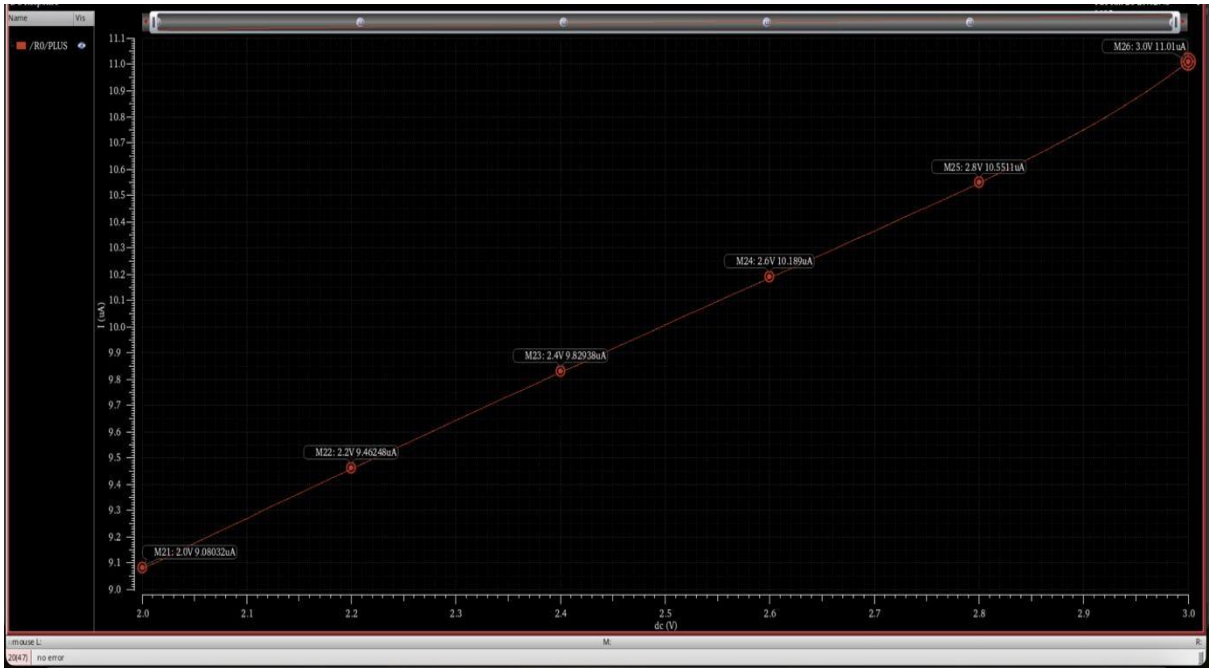

V_{DD}	$\frac{I_{ref1} - I_{ref2}}{I_{ref2}} \times 100$
2V	-0.00055%
2.2V	0.010145%
2.4V	0.01129%
2.6V	0.02257%
2.8V	0.116575%
3V	1.38056%

Plot the g_m of this transistor from -20C to +85C.

Schematic:

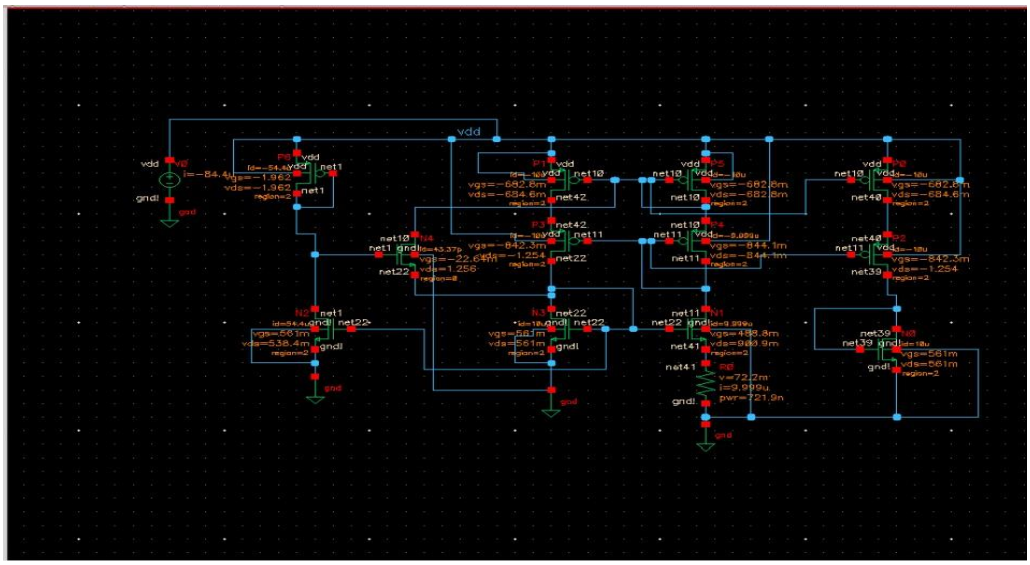

Plot:

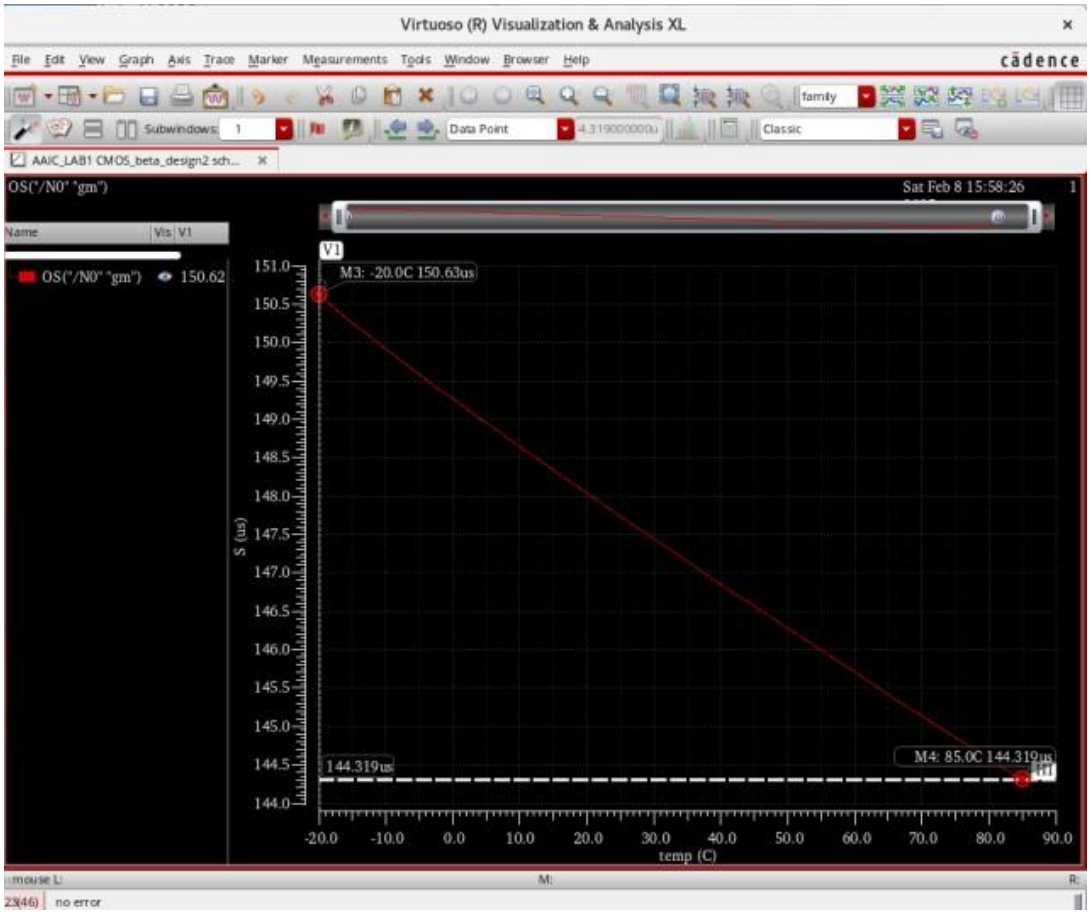

Variation = $\frac{150.630-144.319}{144.319} \times 100 = 4.37295\%$

Plot V_{bias} for the V_{DD} range given above (200mV V_{DD} increments from 2V to 3V)

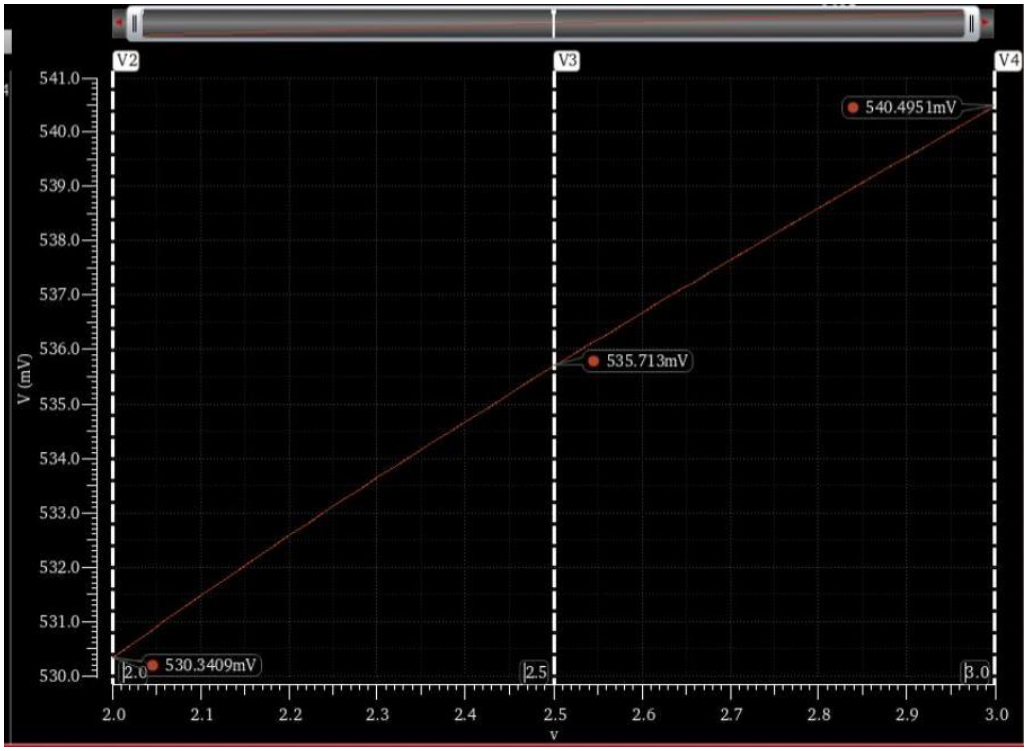

Plot V_{bias} from -20C to +85C for V_{DD} = 2.5V with nominal models

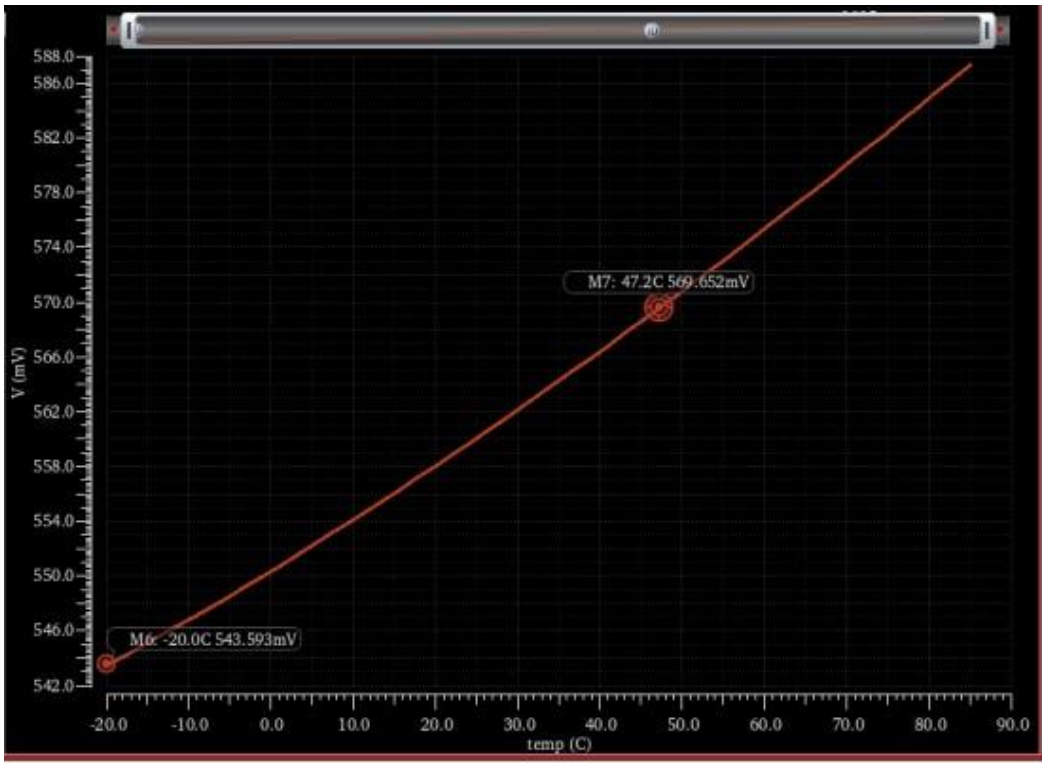

Hand Calculations:

Assuming $V_{ov} = 0.1\,V$

$$I_D = \frac{1}{2} \mu_n C_{ox} \frac{W}{L} (V_{ov})^2$$

$$10 \times 10^{-6} = \frac{1}{2} \times 2.708 \times 10^{-4} \times \frac{W}{600 \times 10^{-9}} \times (0.1)^2$$

$$\frac{10 \times 10^{-6} \times 2 \times 600 \times 10^{-9}}{2.708 \times 10^{-4} \times 0.1 \times 0.1} = W$$

$$W_n = 4.4313\ \mu m$$

$$I_D = \frac{1}{2} \mu_p C_{ox} \frac{W}{L} (V_{ov})^2$$

$$10 \times 10^{-6} = \frac{1}{2} \times 0.944 \times 10^{-4} \times \frac{W}{600 \times 10^{-9}} \times (0.1)^2$$

$$\frac{10 \times 10^{-6} \times 2 \times 600 \times 10^{-9}}{0.944 \times 10^{-4} \times (0.1)^2} = W$$

$$W = 12.0518\ \mu m$$

By KVL, $\frac{(V_{GS})_{M_1} - (V_{GS})_{M_2}}{I} = R$

$$(V_{GS})_{M_1} = V_{TH} + \sqrt{\frac{2I}{K'\frac{W}{L}}}$$

$$= 0.5 + \sqrt{\frac{2 \times 10 \times 10^{-6}}{2.708 \times 10^{-4} \times \frac{4.425 \times 10^{-6}}{600 \times 10^{-9}}}}$$

$$= 0.6$$

$$(V_{GS})_{M_2} = V_{th} + \sqrt{\frac{2I}{K'(\beta \cdot \frac{W}{L})}}$$

$$= 0.5 + \sqrt{\frac{2 \times 10 \times 10^{-6}}{2.708 \times 10^{-4} \times 4}}$$

$$= 0.55V$$

$$R = \frac{(V_{GS})_{M_1} - (V_{GS})_{M_2}}{I}$$

$$\Rightarrow \frac{0.6 - 0.55}{10 \times 10^{-6}} = 5\,K\Omega$$

Simulation:

Design 1: $(V_{GS})_{M_1} = 0.5611V$

$(V_{GS})_{M_2} = 0.4860$

$I = 10.01\,\mu A$

$$R = \frac{(V_{GS})_{M_1} - (V_{GS})_{M_2}}{I}$$

$$= \frac{0.5611 - 0.4866}{10.01 \times 10^{-6}} = 7.4420\,k\Omega$$

In Cadence, $R = 7.22\,K\Omega$

The same width and length of the MOSFET are used in Designs 2 and 3.

Design 2:

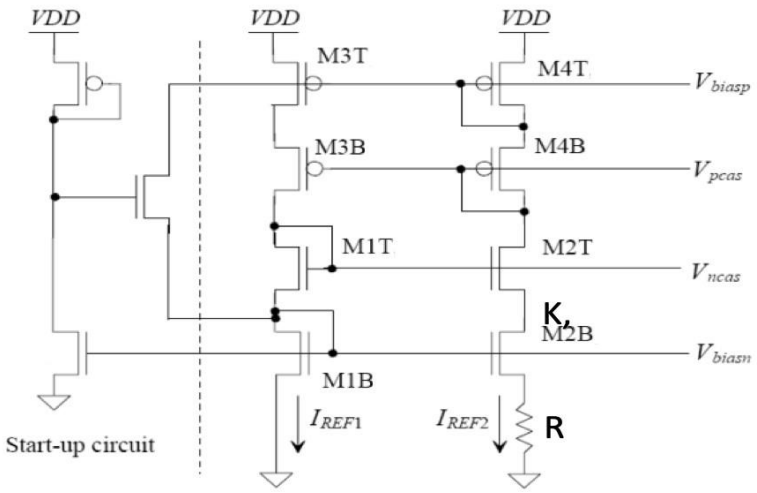

Schematic:

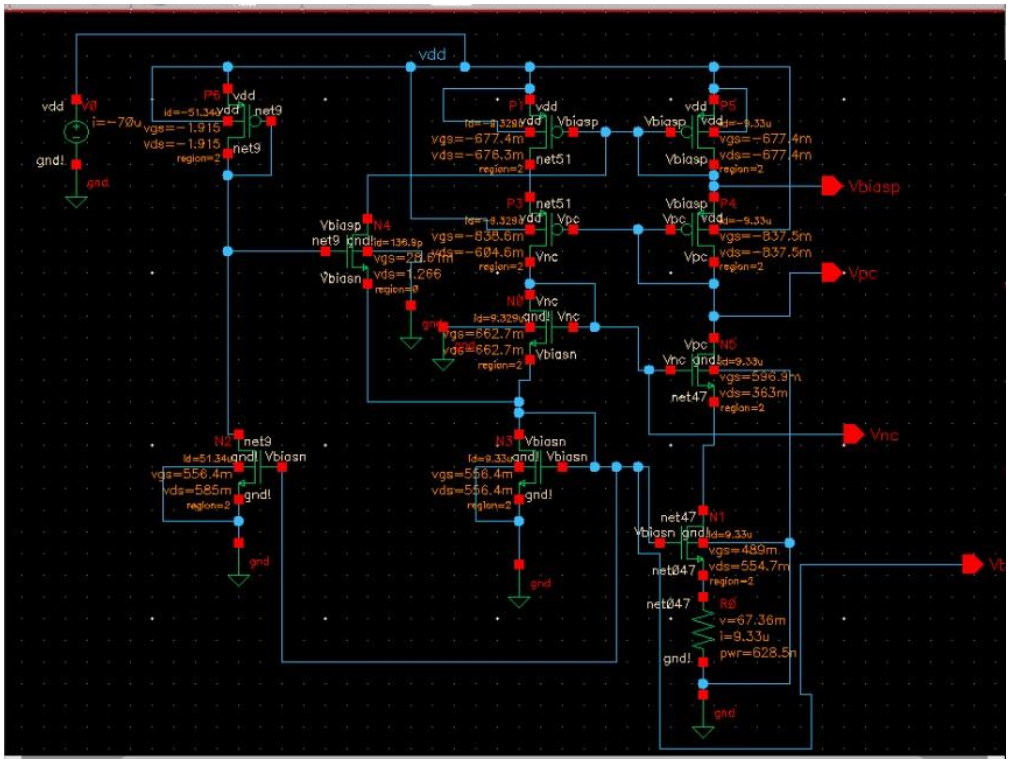

Parameter	Min	Nom	Max
VDD	2.0V	2.5V	3.0V
I_{ref1}, I_{ref2}	9.7942uA	10.01uA	10.0221uA

Resistance (R) = 7.22

1. Device Parameters:

Device	W	Fingers	L	|Vgs-Vt| (V)	|Vds| (V)	|Ibias| (uA)
M1T	4.425um	2	600nm	0.056	0.556	9.33
M1B	4.425um	2	600nm	0.162	0.662	9.33
M2T	4.425um	2	600nm	0.0969	0.363	9.33
M2B	4.425um	2	600nm	0.011	0.5547	9.33
M3T	12.0 um	2	600nm	0.1763	0.6763	9.33
M3B	12.0 um	2	600nm	0.3386	0.6046	9.329
M4T	12.0 um	2	600nm	0.1774	0.6774	9.329
M4B	12.0 um	2	600nm	0.3375	0.8375	9.33
MSUP	67.2 um	2	48.0 um	1.415	1.915	51.34
MSUN	24.0 um	2	600nm	0.085	0.585	51.34
MSU3	24.0 um	2	600nm	0.061	1.256	136.9p

Plot I_{ref1} VS V_{DD} (200mV increments from 2V to 3V).

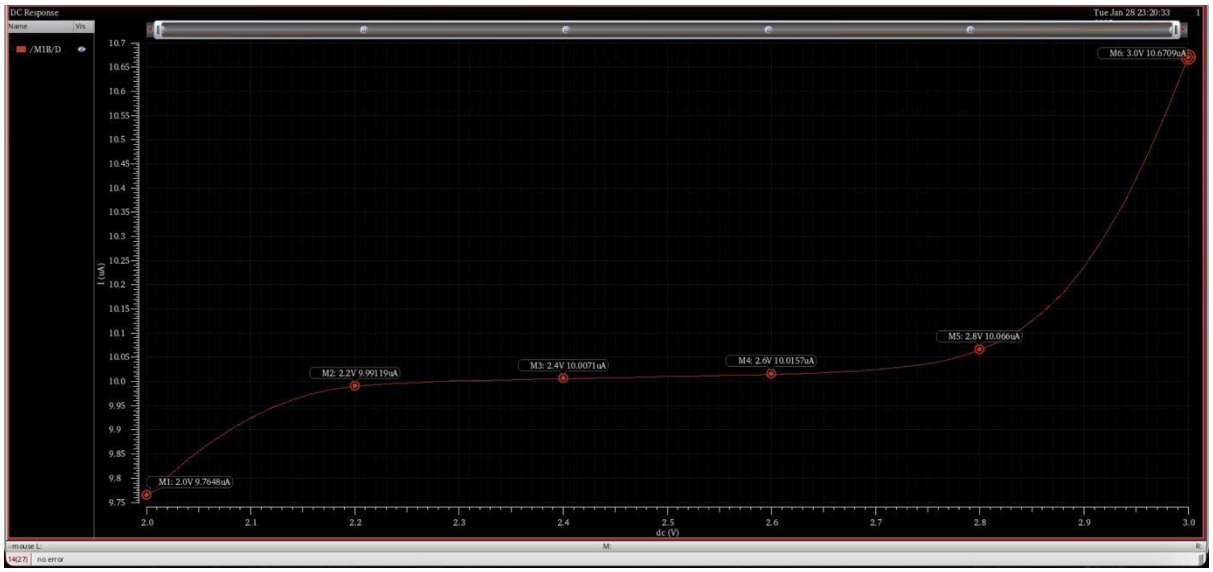

Plot I_{ref2} VS V_{DD} (200mV increments from 2V to 3V).

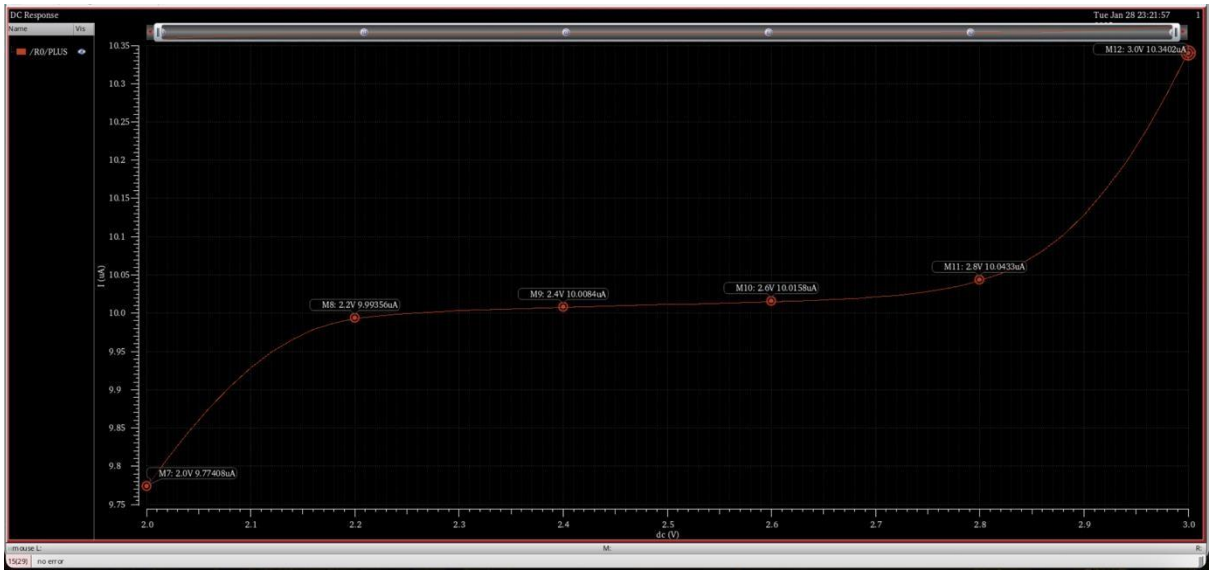

V_{DD}	$\frac{I_{ref1} - I_{ref2}}{I_{ref2}} \times 100$
2V	-0.09489%
2.2V	-0.023710%
2.4V	-0.012985%
2.6V	0.575520%
2.8V	-3.51760%
3V	3.19819%

Plot the g_m of this transistor from -20C to +85C.

Schematic:

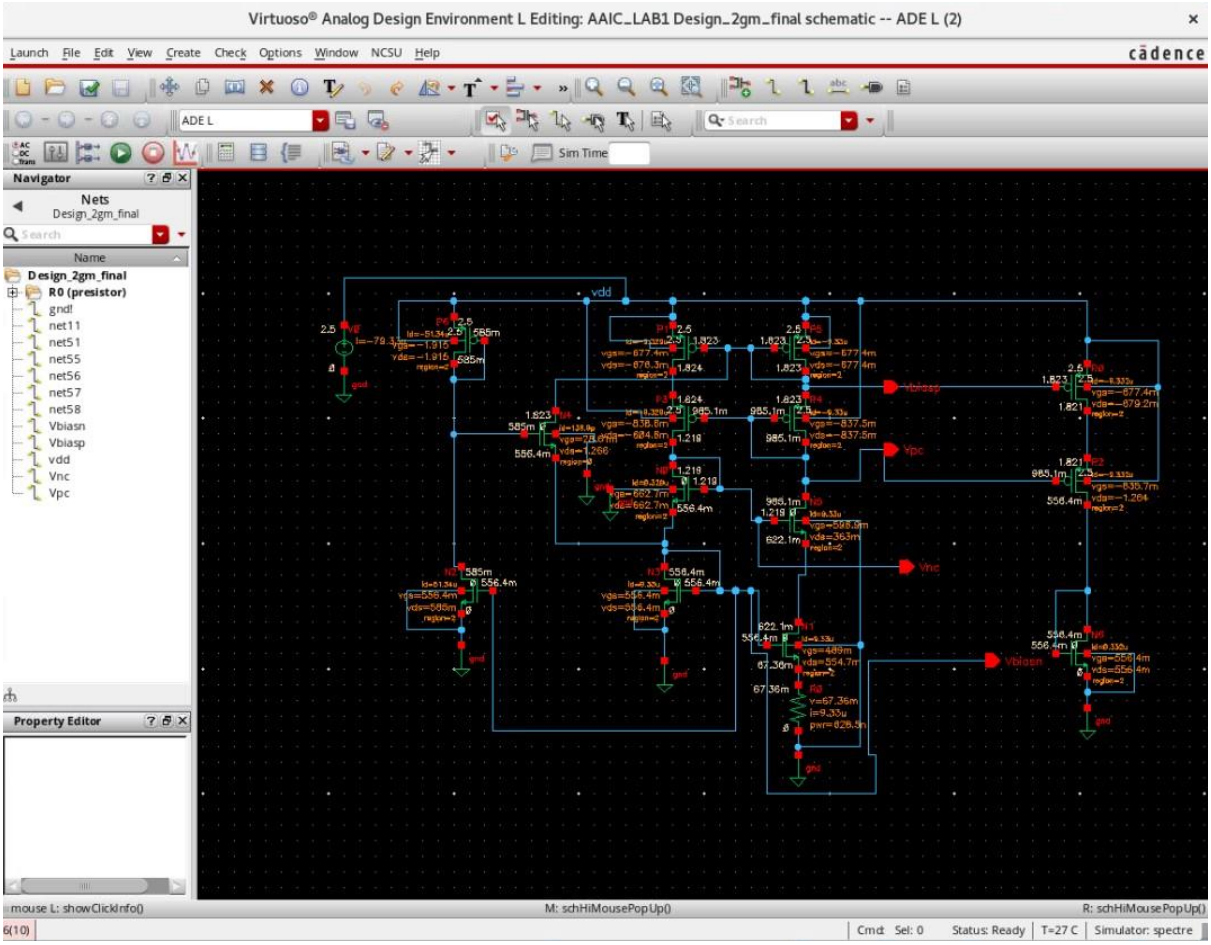
Virtuoso® Analog Design Environment L Editing: AAIC_LAB1 Design_2gm_final schematic -- ADE L (2)
Launch File Edit View Create Check Options Window NCSU Help
cadence
ADE L
Sim Time
Navigator
Nets
Design_2gm_final
Name
Design_2gm_final
R0 (presistor)
gnd!
net11
net51
net55
net56
net57
net58
Vbiasn
Vbiasp
vdd
Vnc
Vpc
Property Editor
vdd
Vbiasp
Vpc
Vnc
Vbiasn
mouse L: showClickInfo()
M: schHiMousePopUp()
R: schHiMousePopUp()
Cmd: Sel: 0
Status: Ready
T=27 C
Simulator: spectre

Plot:

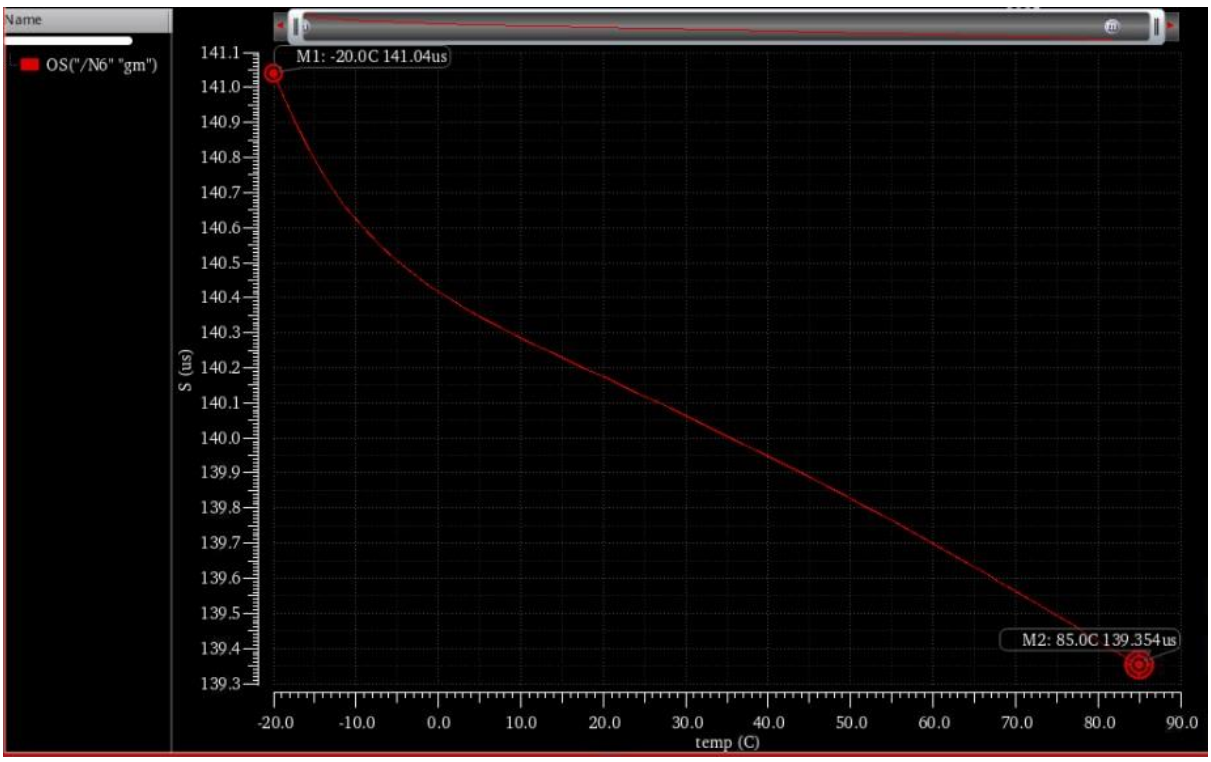
Name
OS("/N6" "gm")
M1: -20.0C 141.04us
M2: 85.0C 139.354us
S (us)
temp (C)
141.1
141.0
140.9
140.8
140.7
140.6
140.5
140.4
140.3
140.2
140.1
140.0
139.9
139.8
139.7
139.6
139.5
139.4
139.3
-20.0
-10.0
0.0
10.0
20.0
30.0
40.0
50.0
60.0
70.0
80.0
90.0

Variation = $\frac{141.04-139.354}{139.354} \times 100 = 1.2091\%$

Plot V_{bias} for the V_{DD} range given above (200mV V_{DD} increments from 2V to 3V)

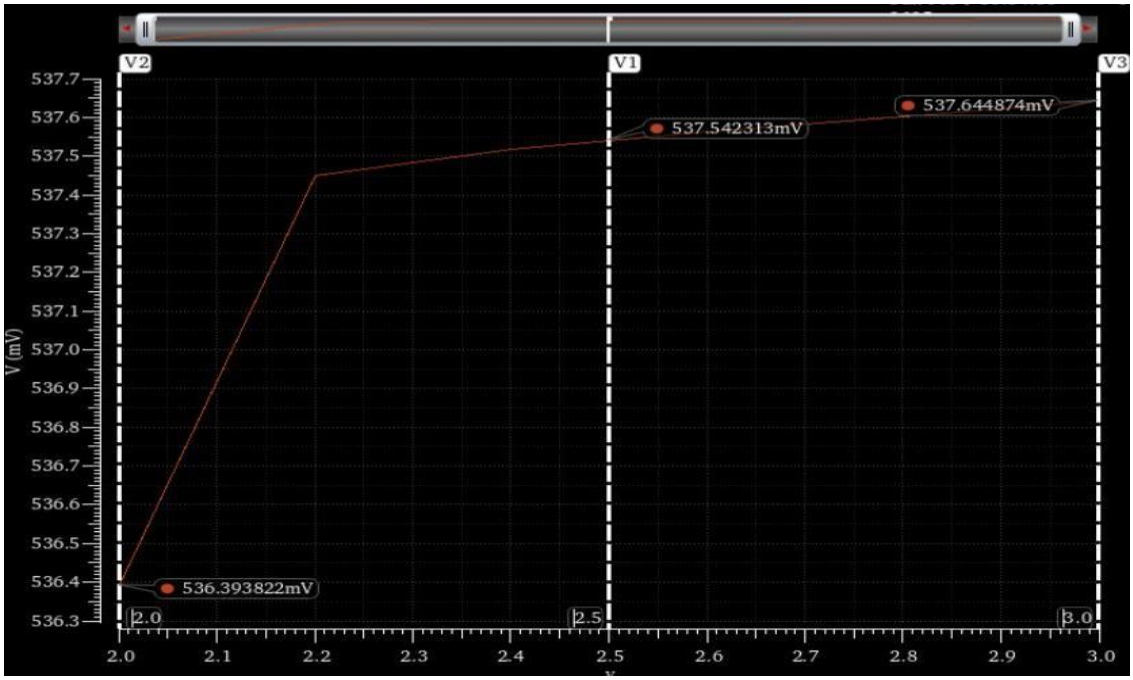

Plot V_{bias} from -20C to +85C for V_{DD} = 2.5V with nominal models

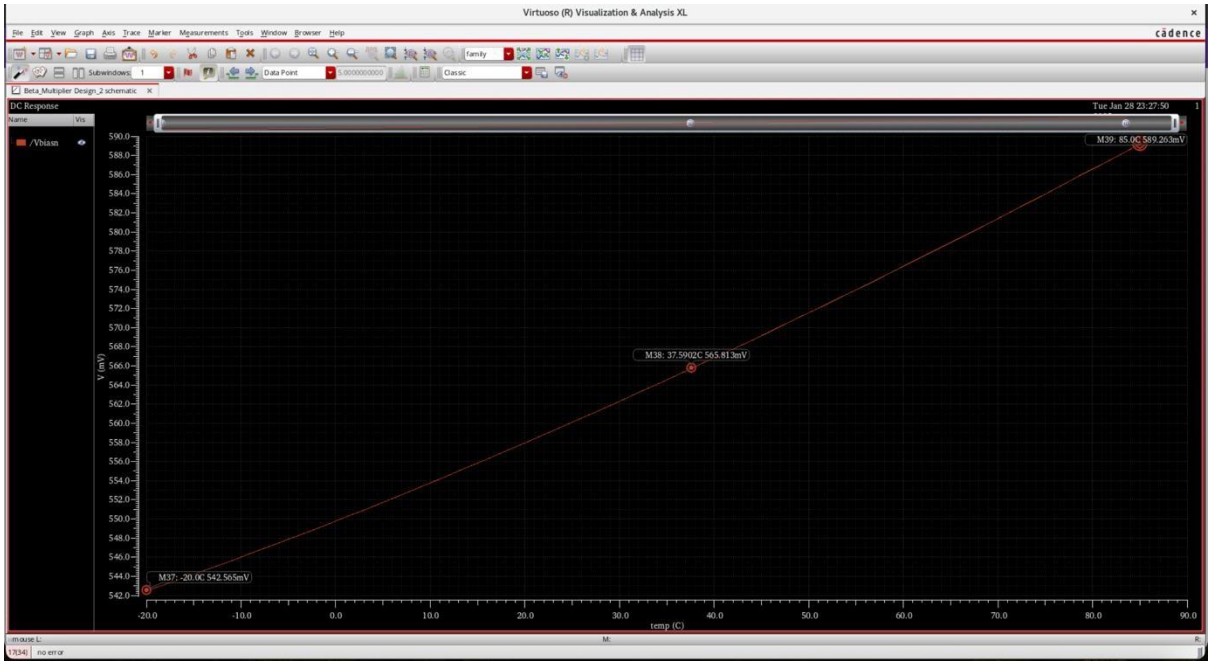

Design 3:

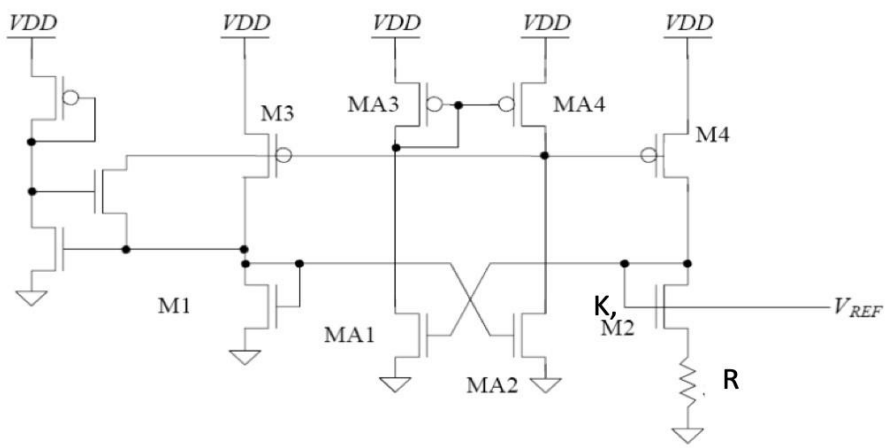

Schematic:

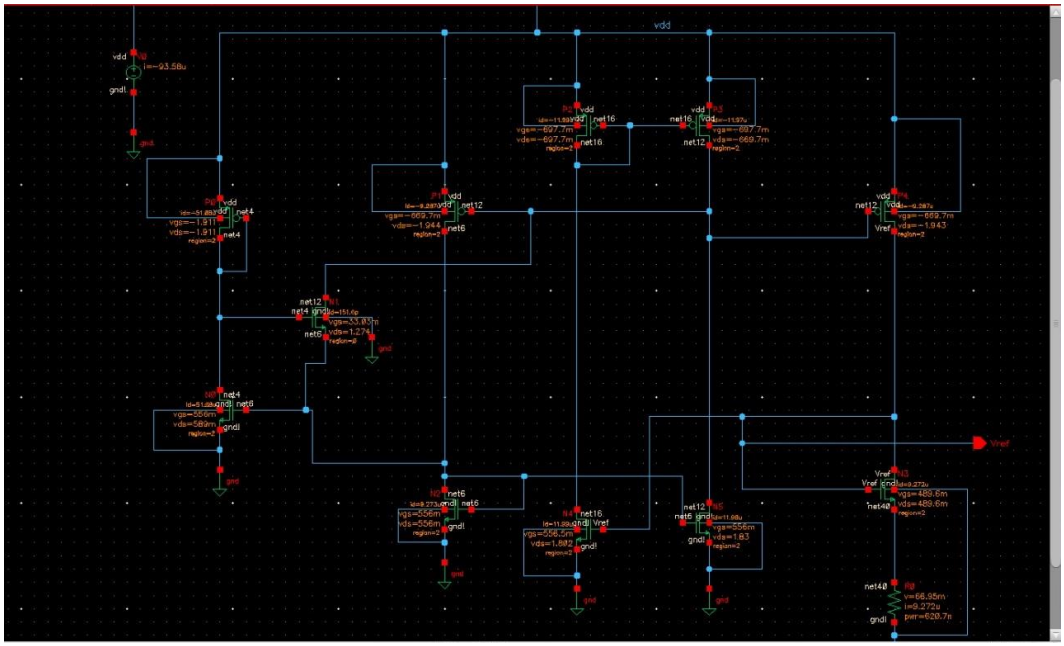

Parameter	Min	Nom	Max
VDD	2.0V	2.5V	3.0V
I_{ref1}, I_{ref2}	9.971uA	10.uA	10.37uA

Resistance (R) = 7.22k

1. Device Parameters:

Device	W	Fingers	L	|Vgs-Vt| (V)	|Vds| (V)	|Ibias| (uA)
M1	4.425um	2	600nm	0.056	0.556	9.272
M2	4.425um	2	600nm	0.0104	0.4896	9.273
M3	12.0 um	2	600nm	0.1977	0.6697	9.287
M4	12.0 um	2	600nm	0.3441	0.8441	11.99
MA4	12.0 um	2	600nm	0.1977	0.6697	9.287
MA3	12.0 um	2	600nm	0.1687	1.943	11.99
MA2	4.425um	2	600nm	0.061	0.5611	9.272
MA1	4.425um	2	600nm	0.0565	1.802	9.273
MSUP	67.2 um	2	48.0 um	1.411	1.911	51.08
MSUN	24.0 um	2	600nm	0.089	0.589	51.08
MSU3	24.0 um	2	600nm	0.061	1.256	151.6p

Plot I_{ref1} VS V_{DD} (200mV increments from 2V to 3V).

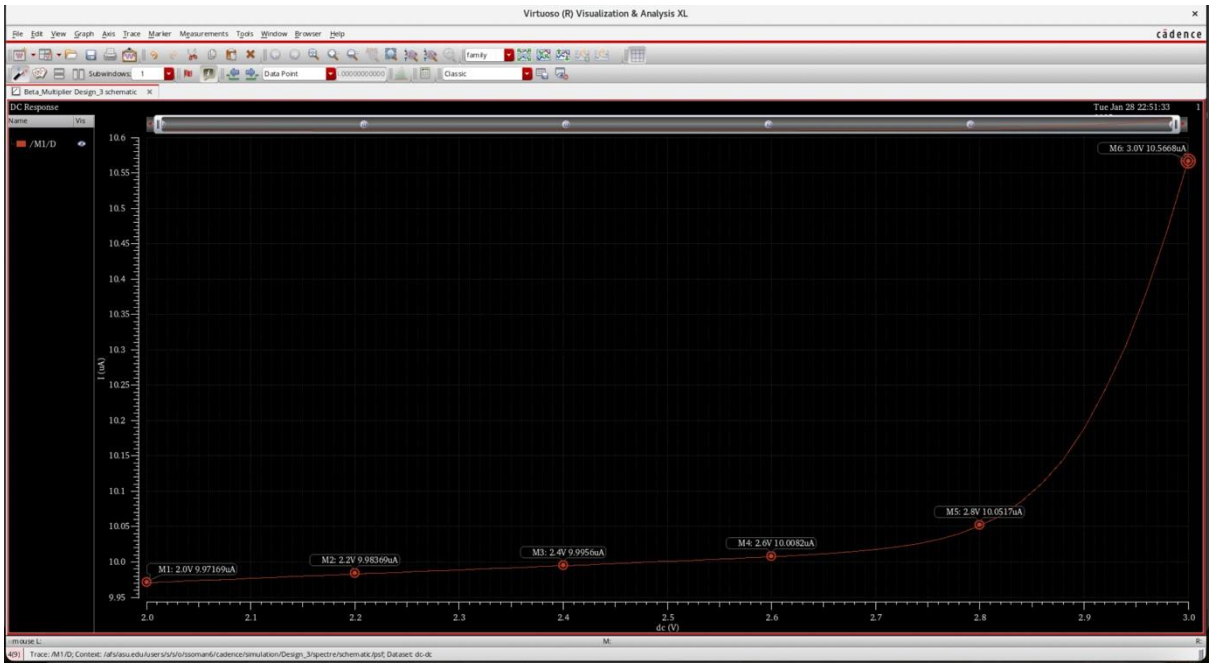

Plot I_{ref2} VS V_{DD} (200mV increments from 2V to 3V).

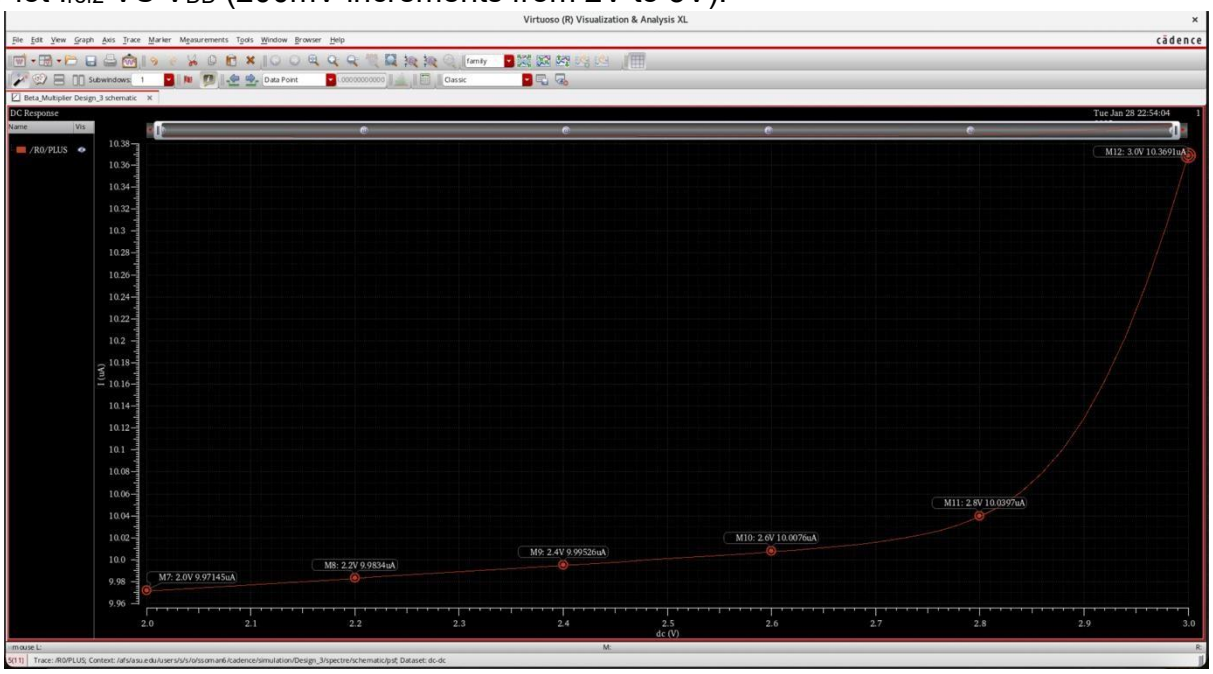

V_{DD}	$\frac{I_{ref1} - I_{ref2}}{I_{ref2}} \times 100$
2V	0.00240%
2.2V	0.002904%
2.4V	-0.002601%
2.6V	0.005995%

2.8V	0.11952%
3V	1.90662%

Plot the g_m of this transistor from -20C to +85C.

Schematic:

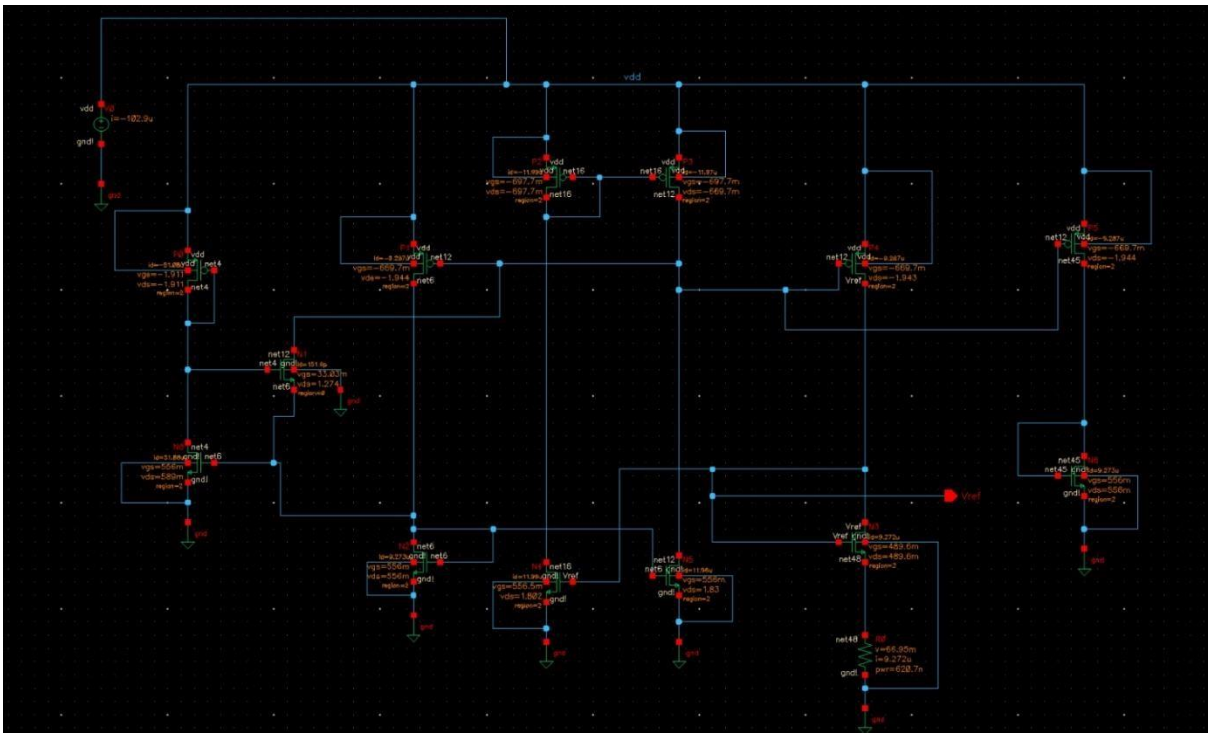

Plot:

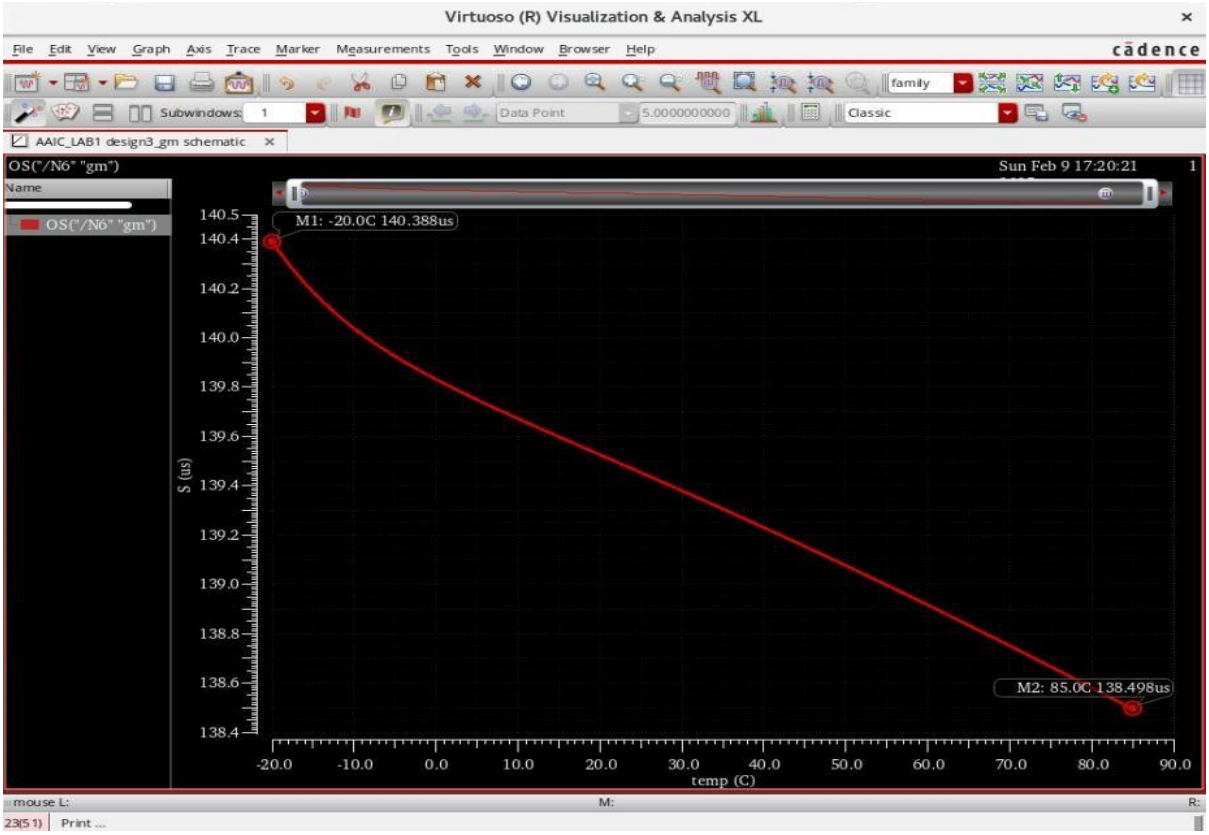

Variation = $\frac{140.388-138.498}{140.388} \times 100 = 1.34627\%$

Plot V_{ref} for the V_{dd} range given above (200mV V_{DD} increments from 2V to 3V).

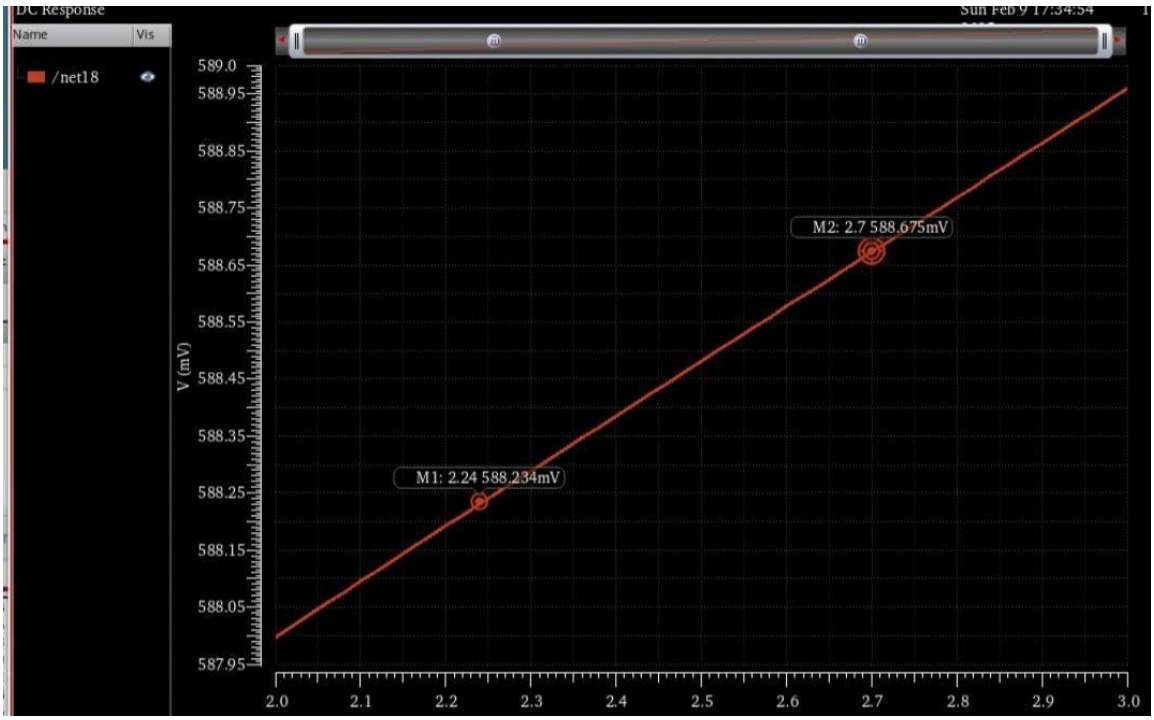
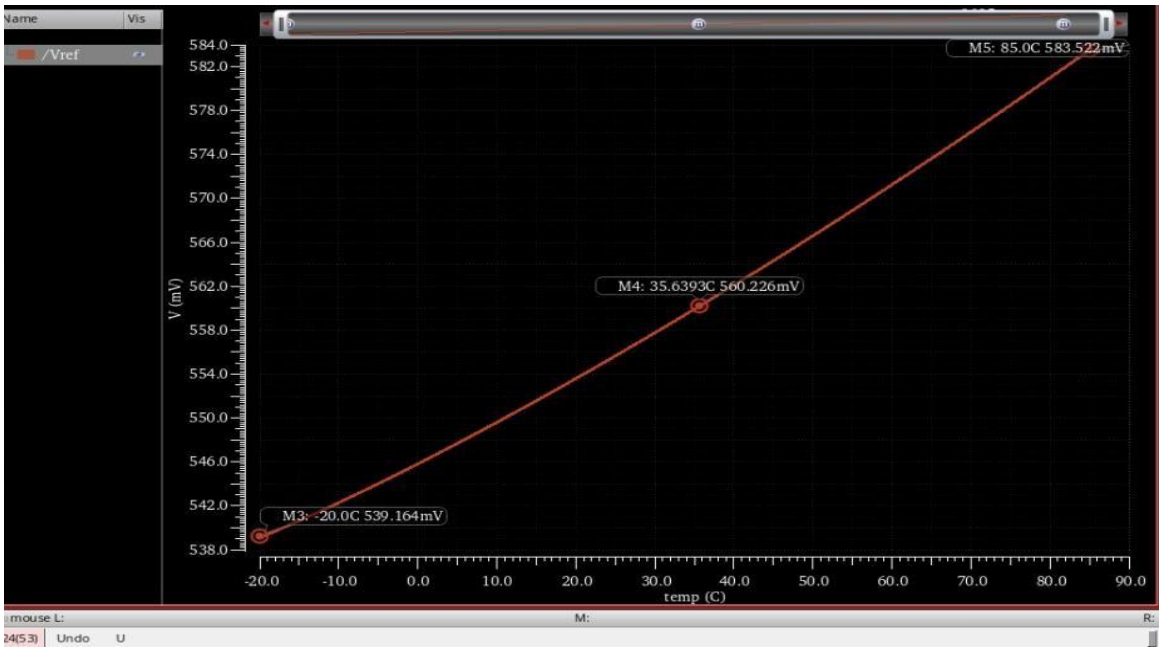
Plot V_{bias} from -20C to +85C for Vdd = 2.5V with nominal models