In this project you'll be designing a single ended NMOS input folded cascode amplifier with a class AB output buffer circuit. The topology of this amp is shown in Fig. 1. Typical biasing circuitry is shown in Fig. 2.

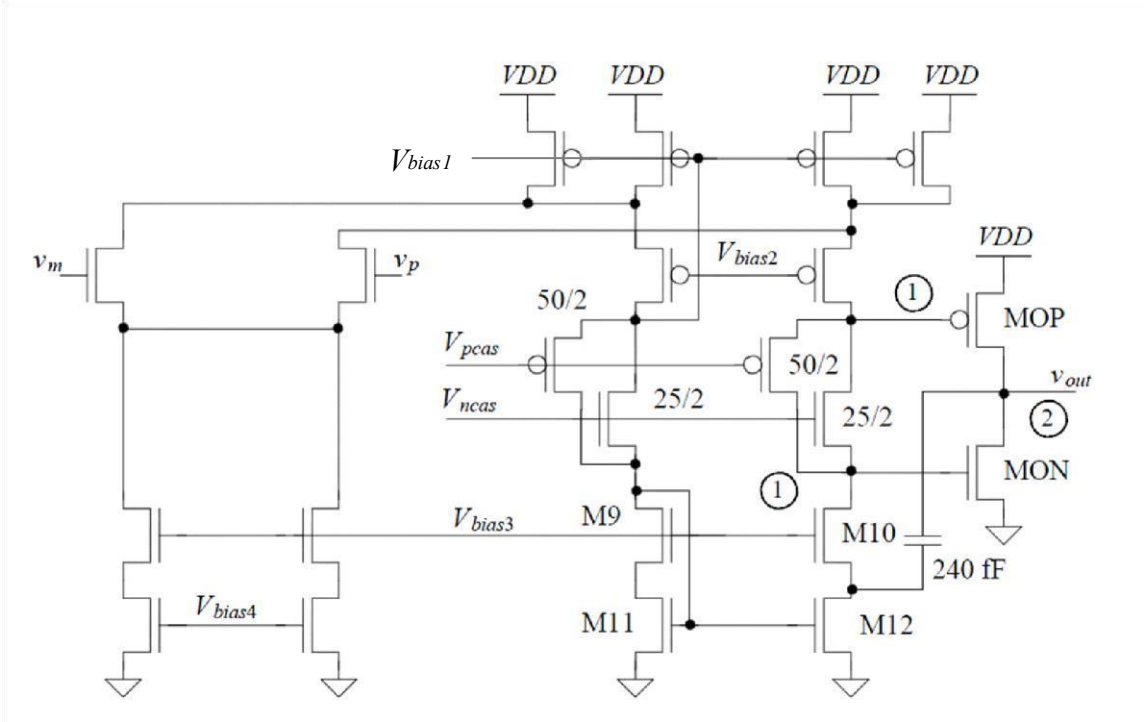

Fig. 1. Typical amplifier topology.

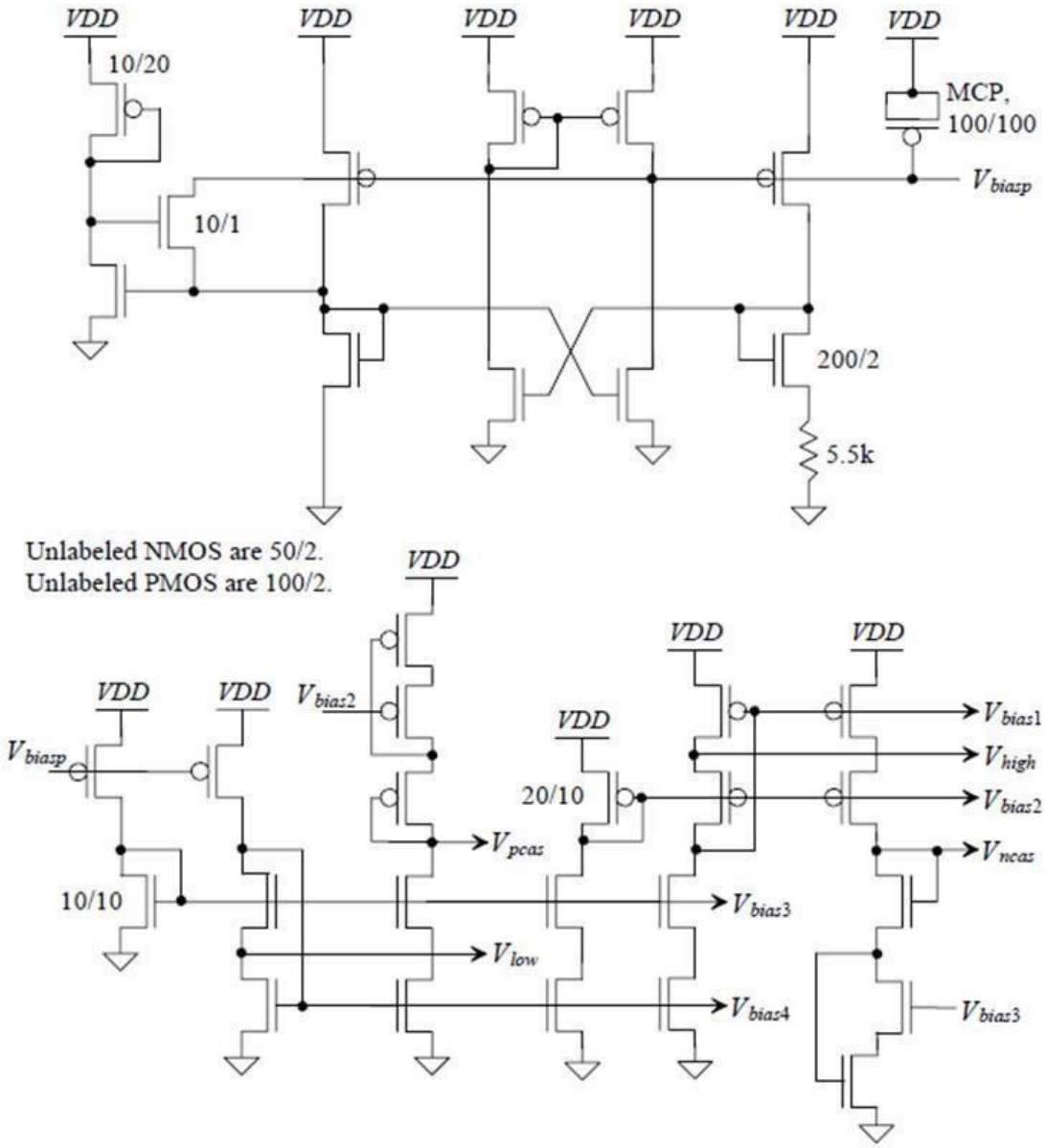

Fig. 2. An exemplary biasing circuit for the class AB buffer amplifier.

Design specification

1. Supply (VDD): 3V
2. Power Dissipation: Around 2mW quiescent power Current, I = P / V = 2mW / 3V = 666.67uA
3. Input Common Mode (Vcm) Range: 1V (+/- 0.5V) around mid-supply

Folded Cascode with Class AB Schematic

Wide Swing Beta Multiplier Schematic

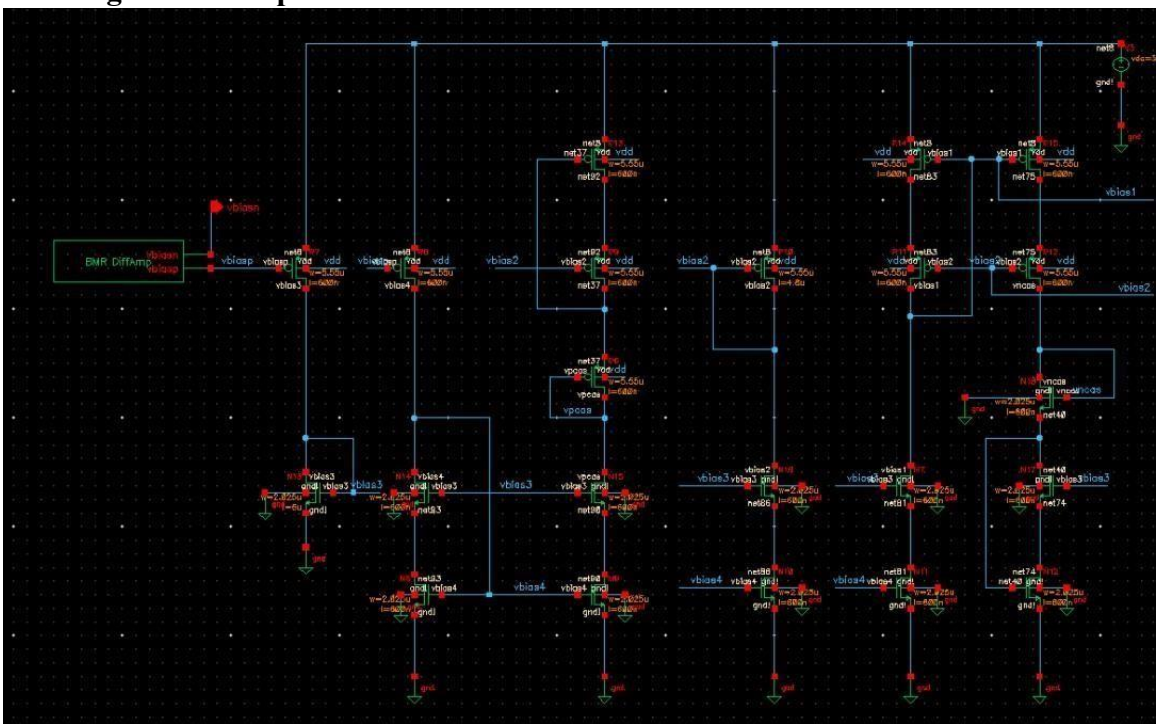

Folded Cascode with Class AB Output Dc Operating Points

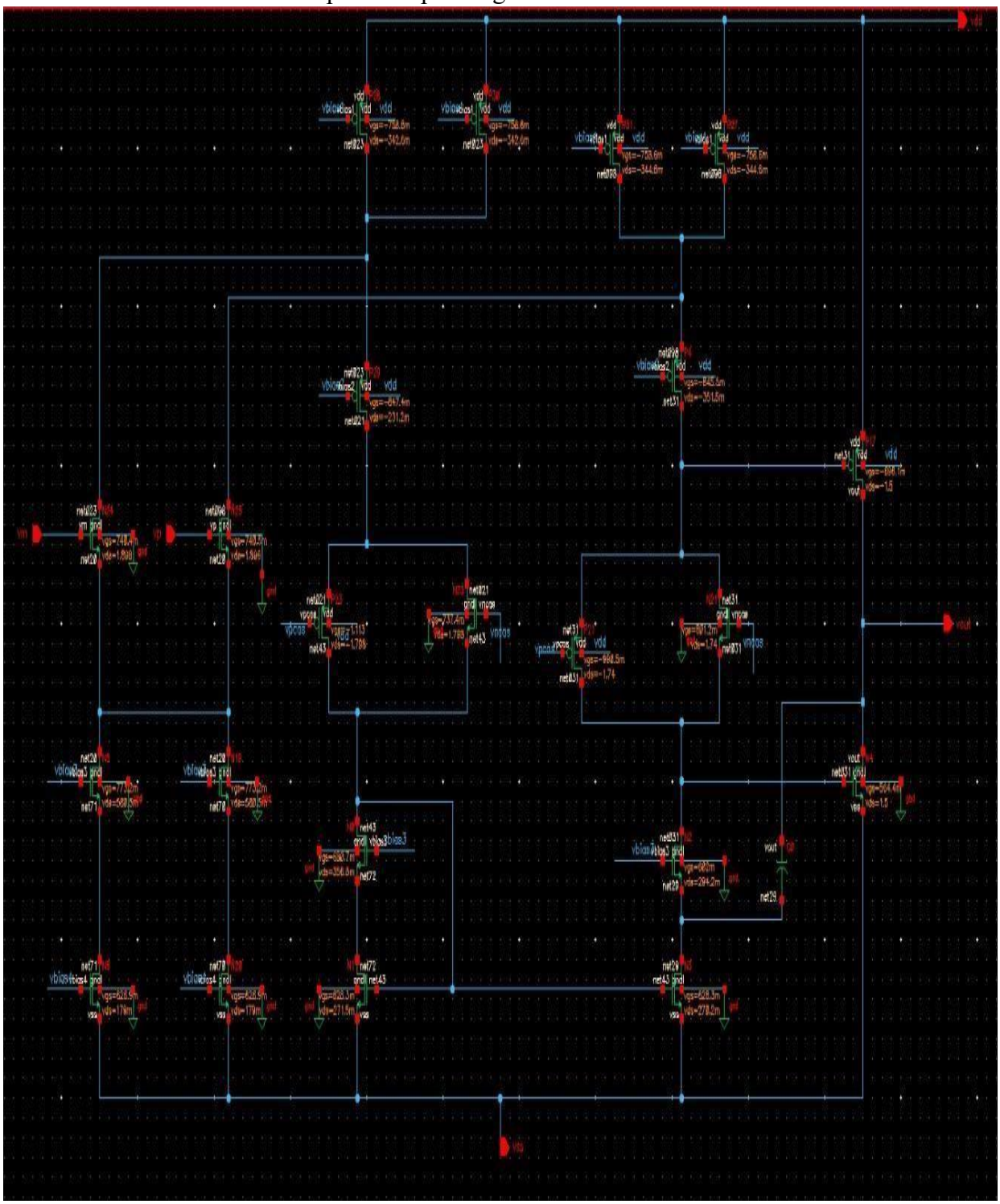

W/L Ratio and Dc Operating Points of folded Cascode with Class AB Output Stage.

Transistor name	Width	Length	Vgs	Vds	Id	Multiplicity
P1	5.475u	600n	758.6m	346.1m	9.9u	3
P2	5.475u	600n	758.6m	346.1m	59.4u	6
P3	5.475u	600n	758.6m	346.8m	9.9u	3
P4	5.475u	600n	758.6m	346.8m	59.4u	6
P5	5.475u	600n	844m	299.6m	59.32u	6
P6	5.475u	600n	843.2m	370.1m	59.32u	6
P7	2.775u	600n	1.041	1.728	43.45u	3
P8	2.775u	600n	967.6m	1.703	32.18u	4
P9	22.125u	600n	716.9m	1.4	469.2u	16
N1	2.025u	600n	691.7m	631.7m	9.978u	3
N2	2.025u	600n	691.7m	631.7m	10u	3
N3	2.025u	600n	675.7m	1.746	9.991u	1
N4	2.025u	600n	675.7m	1.745	9.991u	1
N5	2.025u	600n	626.9m	276.4m	9.991u	1
N6	2.025u	600n	626.9m	276.4m	9.991u	1
N7	2.025u	600n	679m	352.9m	59.32u	6
N8	2.025u	600n	626.1m	273.1m	59.32u	6
N9	2.025u	600n	679.9m	308.1m	59.3u	6

N10	2.025u	600n	626.1m	272.3m	59.3u	6
N11	900n	600n	785.3m	1.7703	15.87u	3
N12	900n	600n	739.6m	1.728	26.6u	3
N13	8.1u	600n	580.3m	1.6m	469.2u	16

Simulations to be performed

Transient simulations

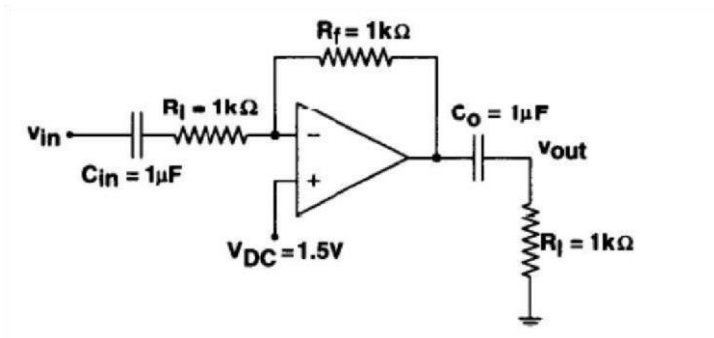

Figure 1 : Circuit to be used for transient simulations

Inverting Amplifier with Gain equal to Unity Configuration

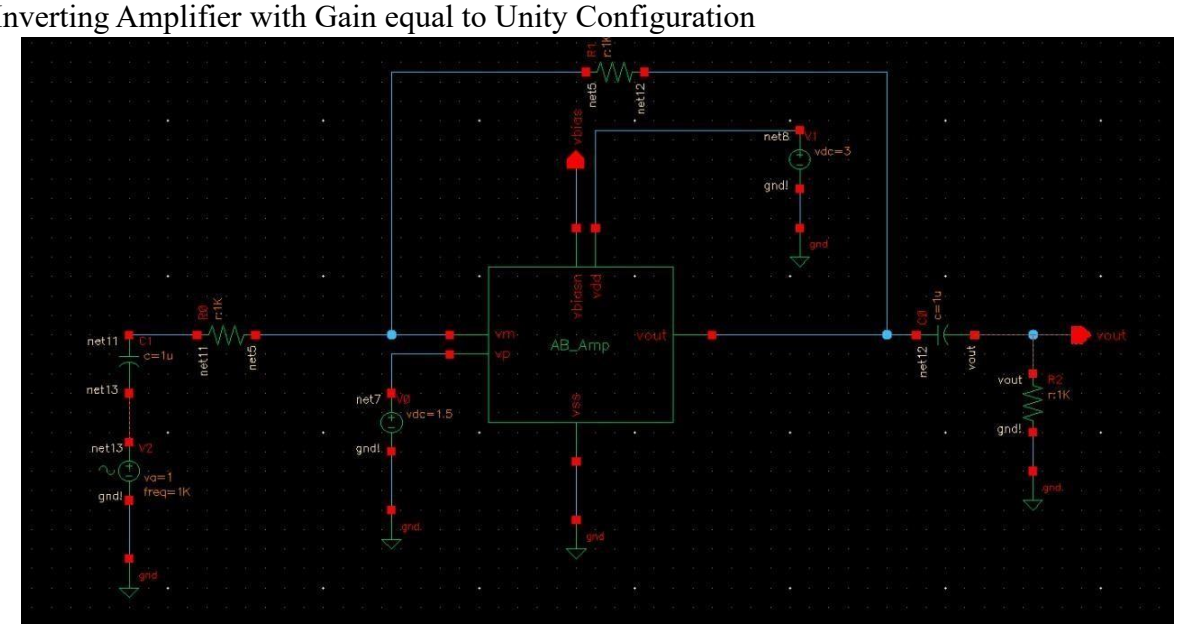

Output Followed by input with 180^0 Phase shift

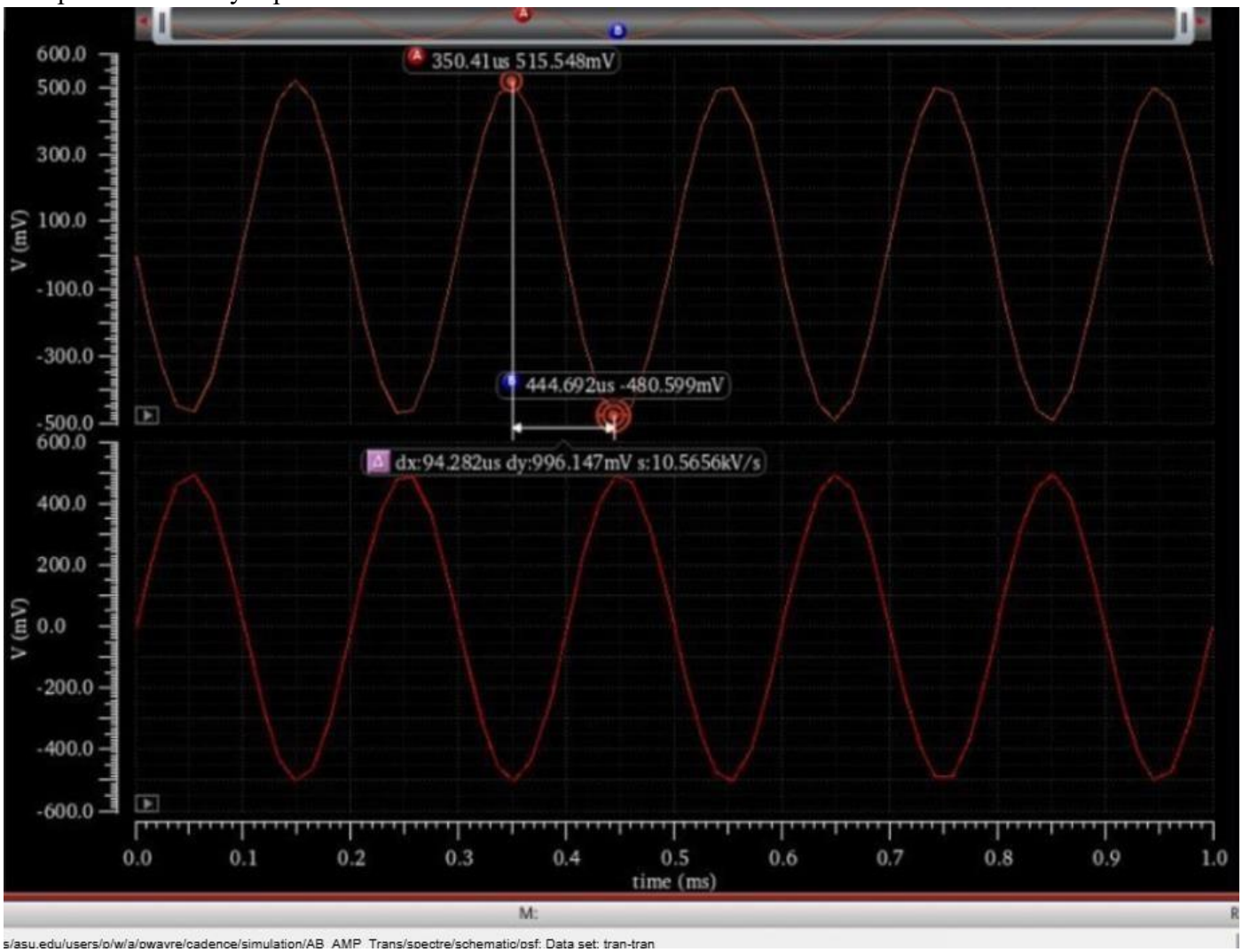

Transient analysis with Vcm=1V

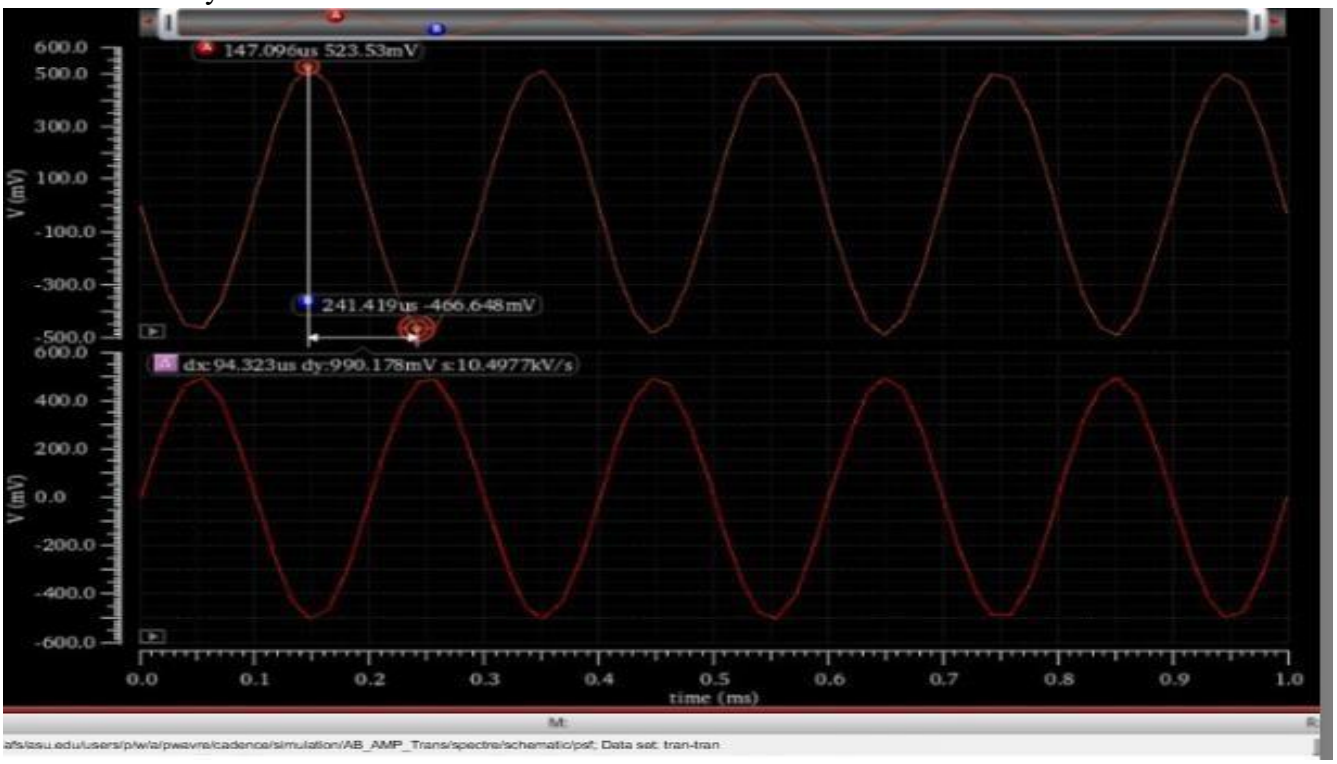

Transient analysis with Vcm = 1.2V

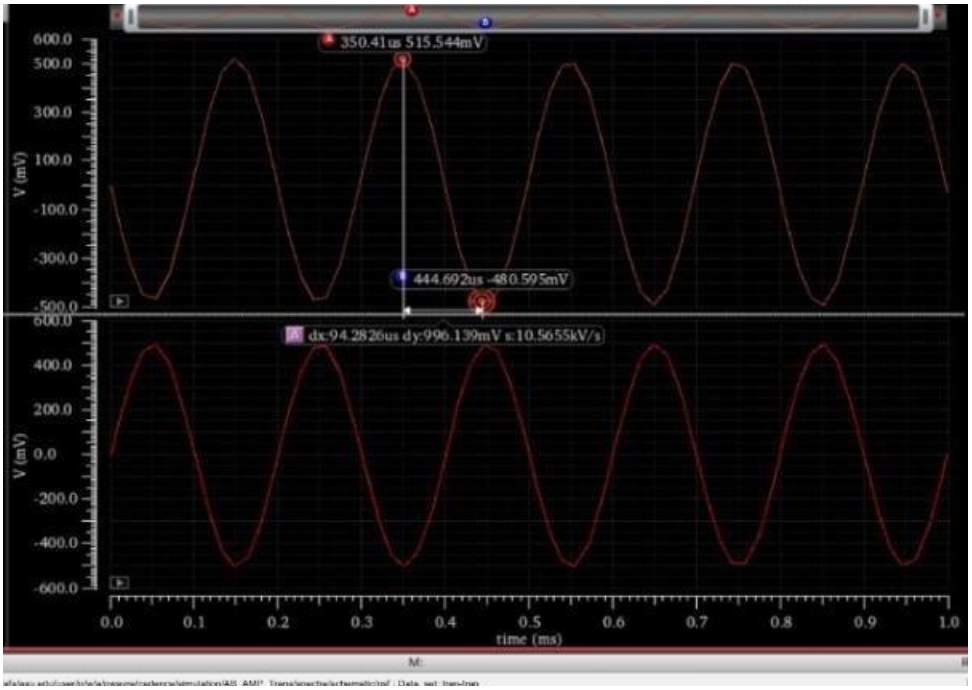

Transient analysis with Vcm = 1.4V

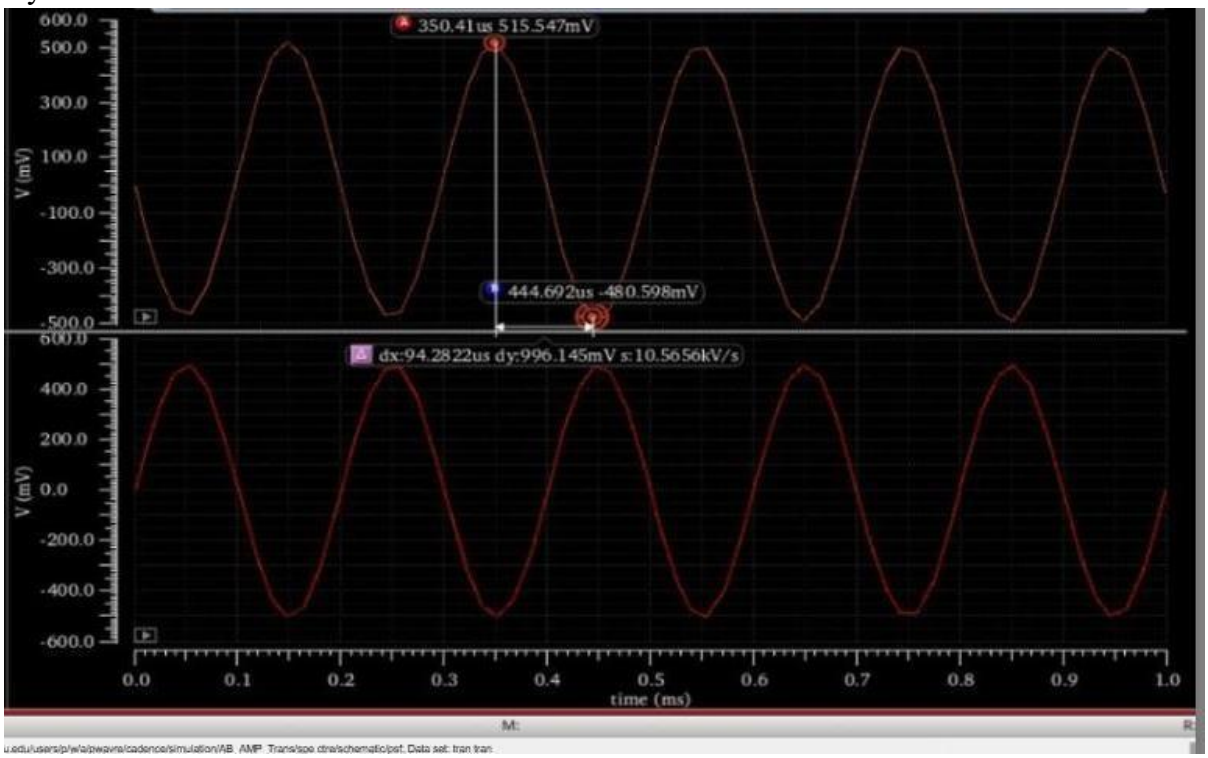

Transient analysis with Vcm = 1.6V

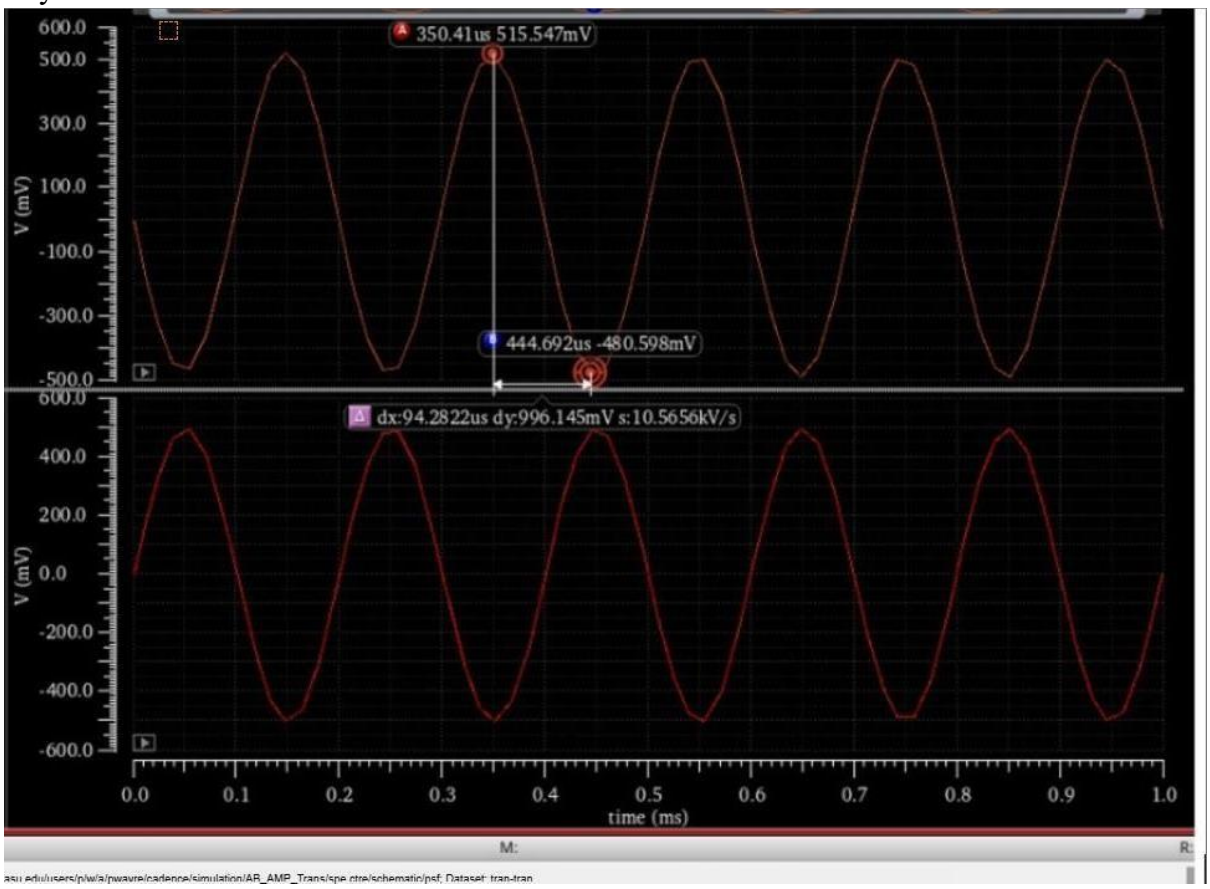

Transient analysis with Vcm = 1.8V

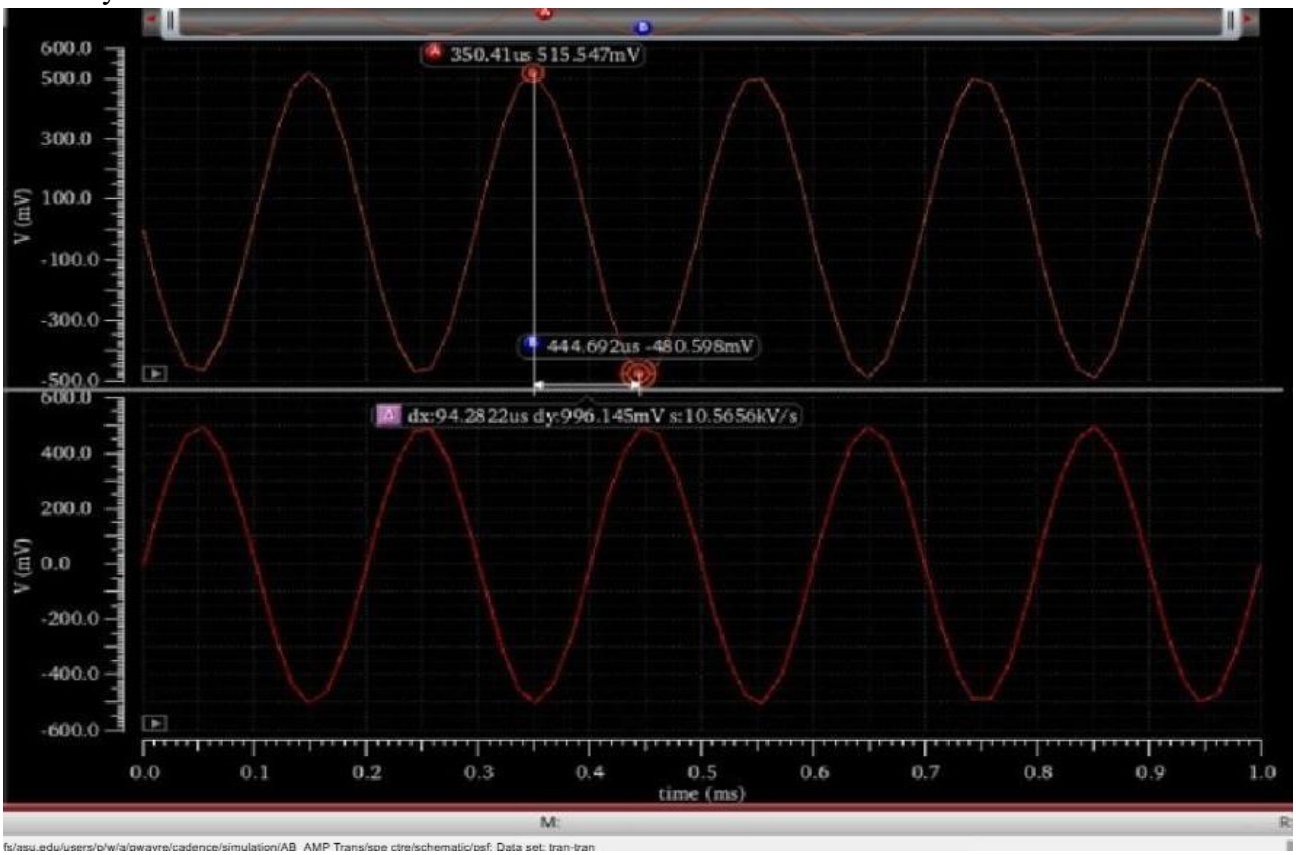

Transient analysis with Vcm = 2V

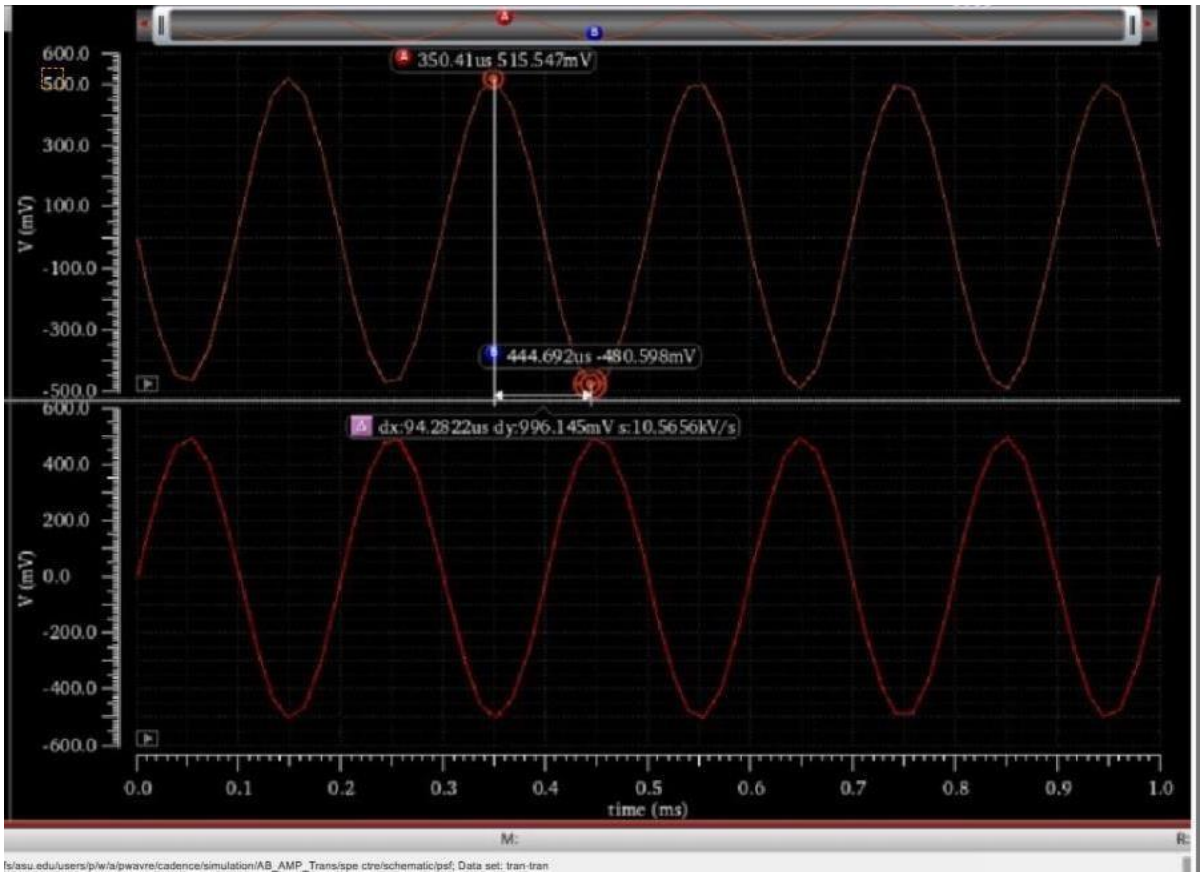

Harmonic Distortion with fin =5K to 15K was observed to be greater than 50db.

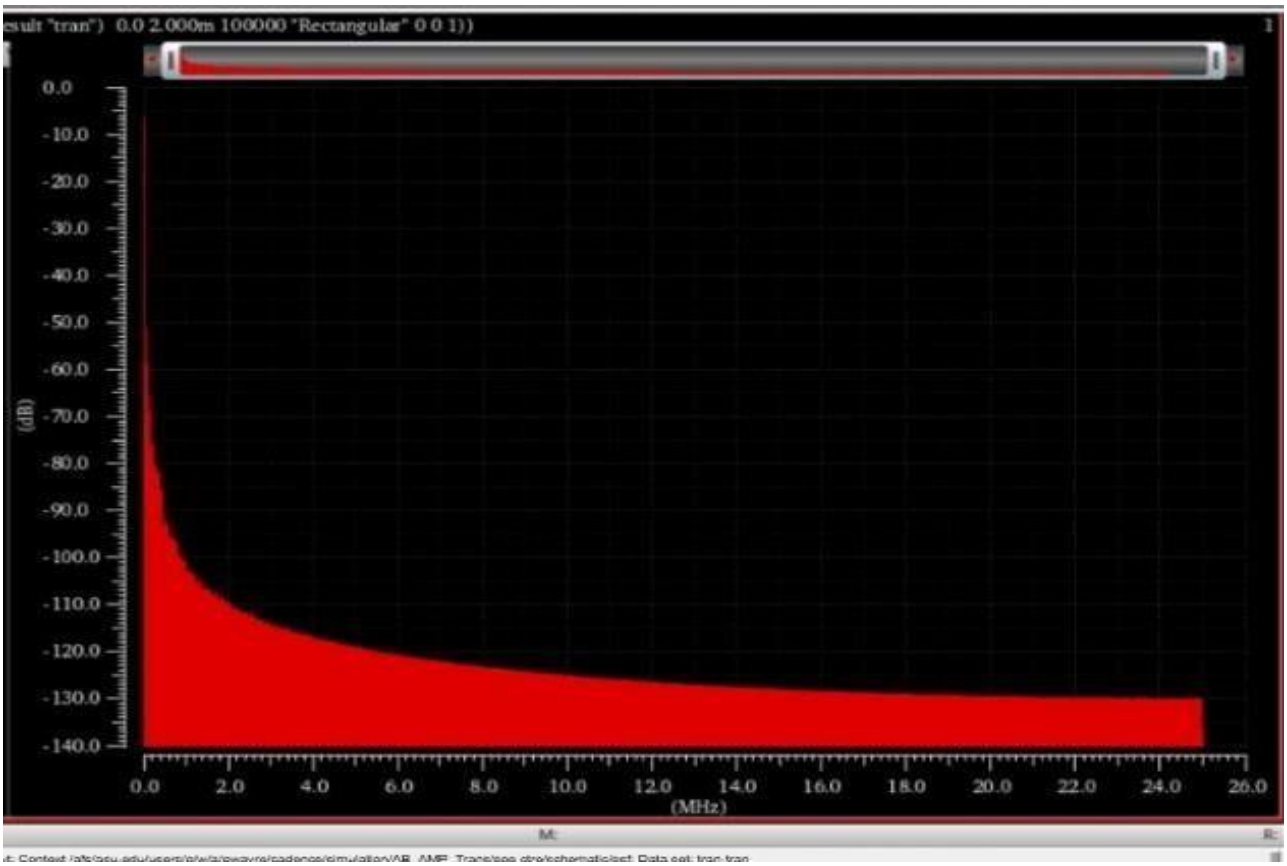
esult "tran") 0.0 2.000m 100000 "Rectangular" 0 0 1))
0.0
-10.0
-20.0
-30.0
-40.0
-50.0
-60.0
-70.0
-80.0
-90.0
-100.0
-110.0
-120.0
-130.0
-140.0
(dB)
0.0
2.0
4.0
6.0
8.0
10.0
12.0
14.0
16.0
18.0
20.0
22.0
24.0
26.0
(MHz)

Slew Rate Schematic

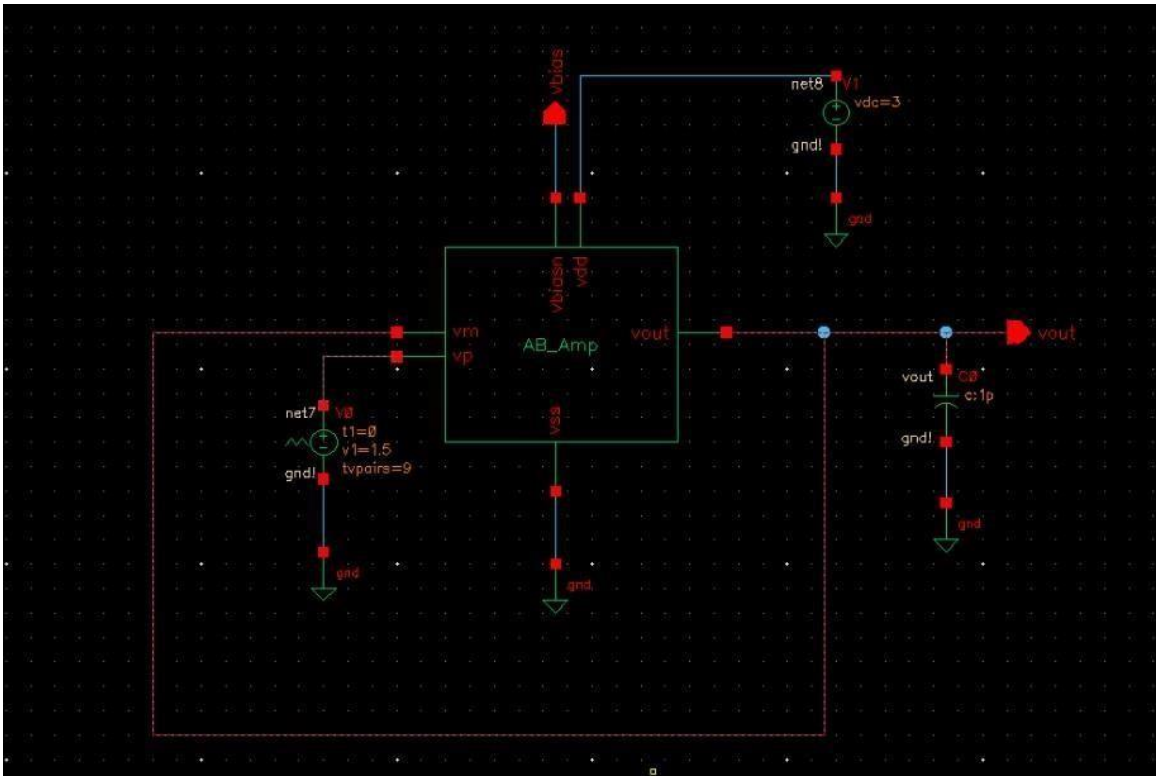

Slew Rate Schematic

Slew rate measurement: 10V/ sec with 1pF cap load only

Connect the amplifier in unity gain follower mode and give the input using v_{pwl} and measure the slew rate.

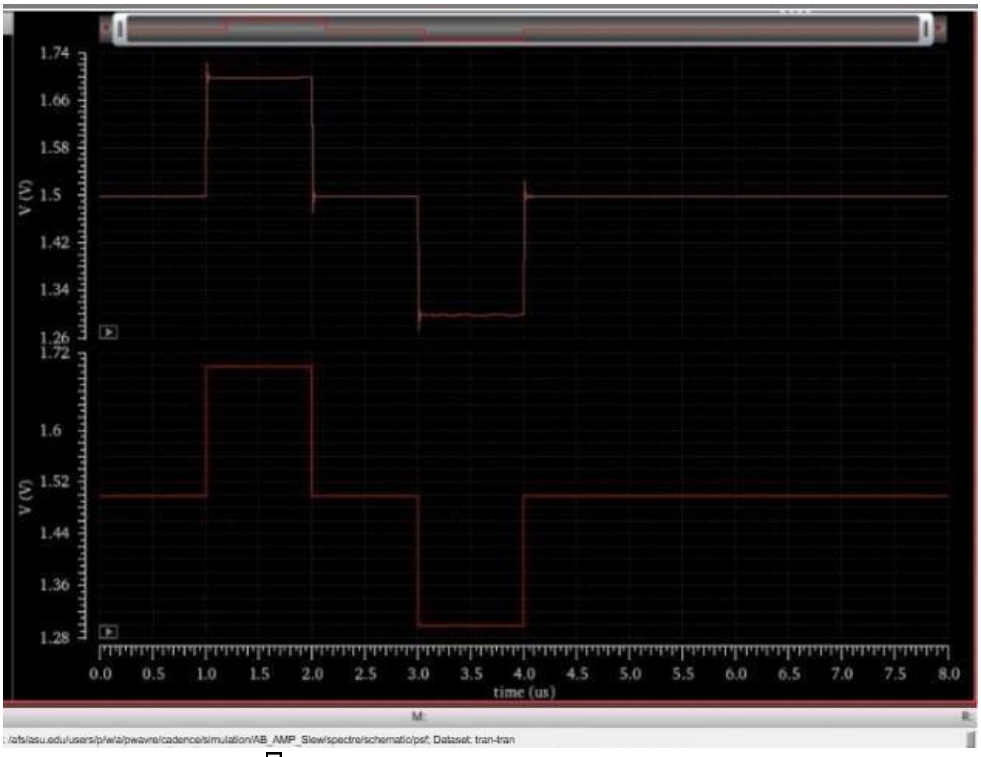

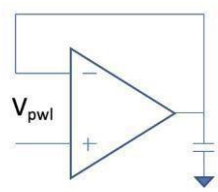

Figure 2 : Circuit to be used for slew rate simulation

AC Simulations

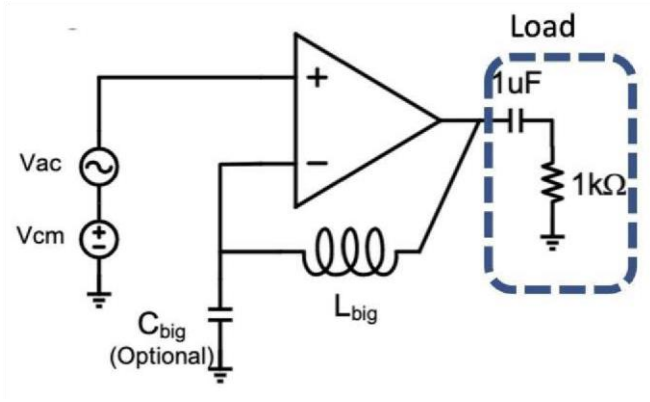

Figure 3 : Schematic to be used for AC simulations

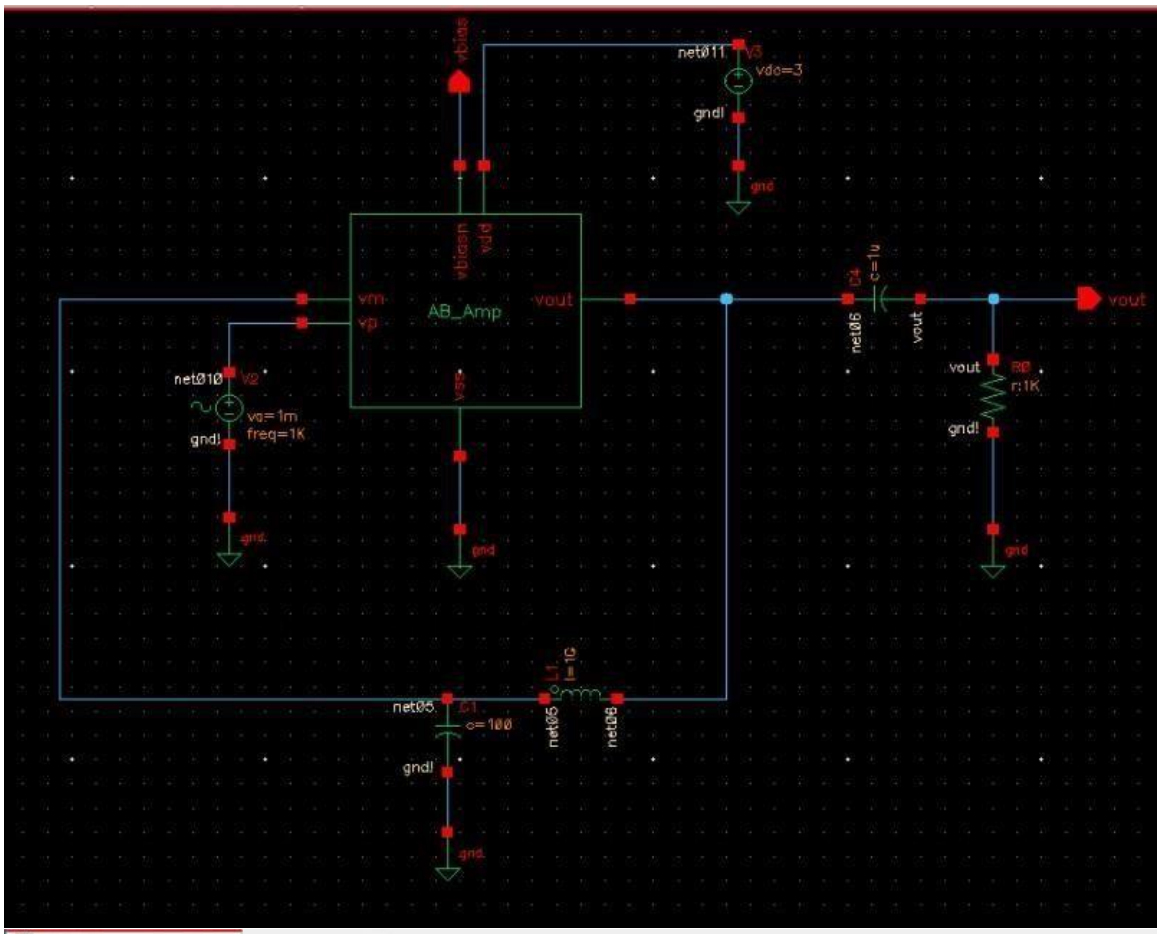
vbias
net011
V3
vdc=3
gnd!
gnd
vbiasn
vdd
vm
vp
AB_Amp
vout
vss
C4
c=1u
net06
vout
vout
R0
r:1K
gnd!
net010
V2
va=1m
freq=1K
gnd!
gnd
gnd
L1
l=1G
net05
C1
c=100
net05
net06
gnd!
gnd

AAIC AB_Amp_ac schematic
AC Response
Name
Vis
V1
phaseDegUn...("/net7")) -112.434deg
dB20(VF("/...("/net7")) 766.77mdB
V1
V2
-112.434deg
M2: 1.31826kHz 73.323dB
766.77mdB
H1
50.0MHz
Phase (deg)
(dB)
freq (Hz)

Unity Gain Follower Schematic

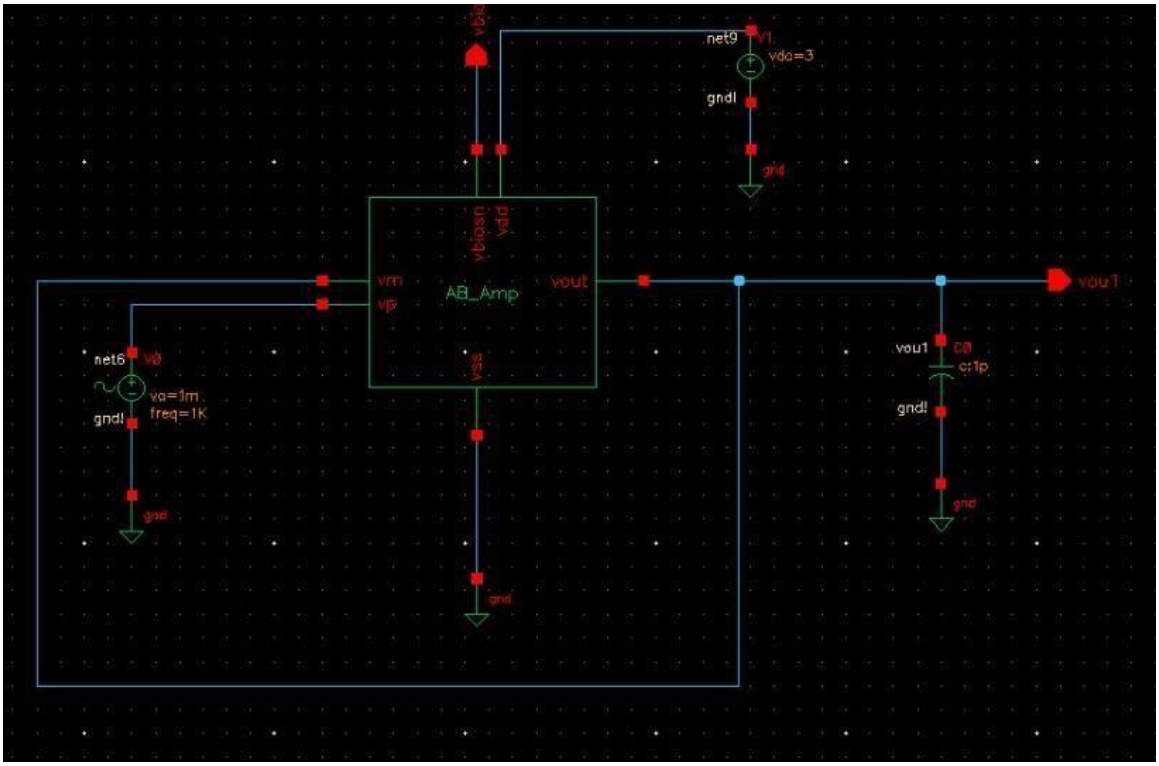

Zero DB frequency was observed to be 15.82MHz

CMRR Schematic

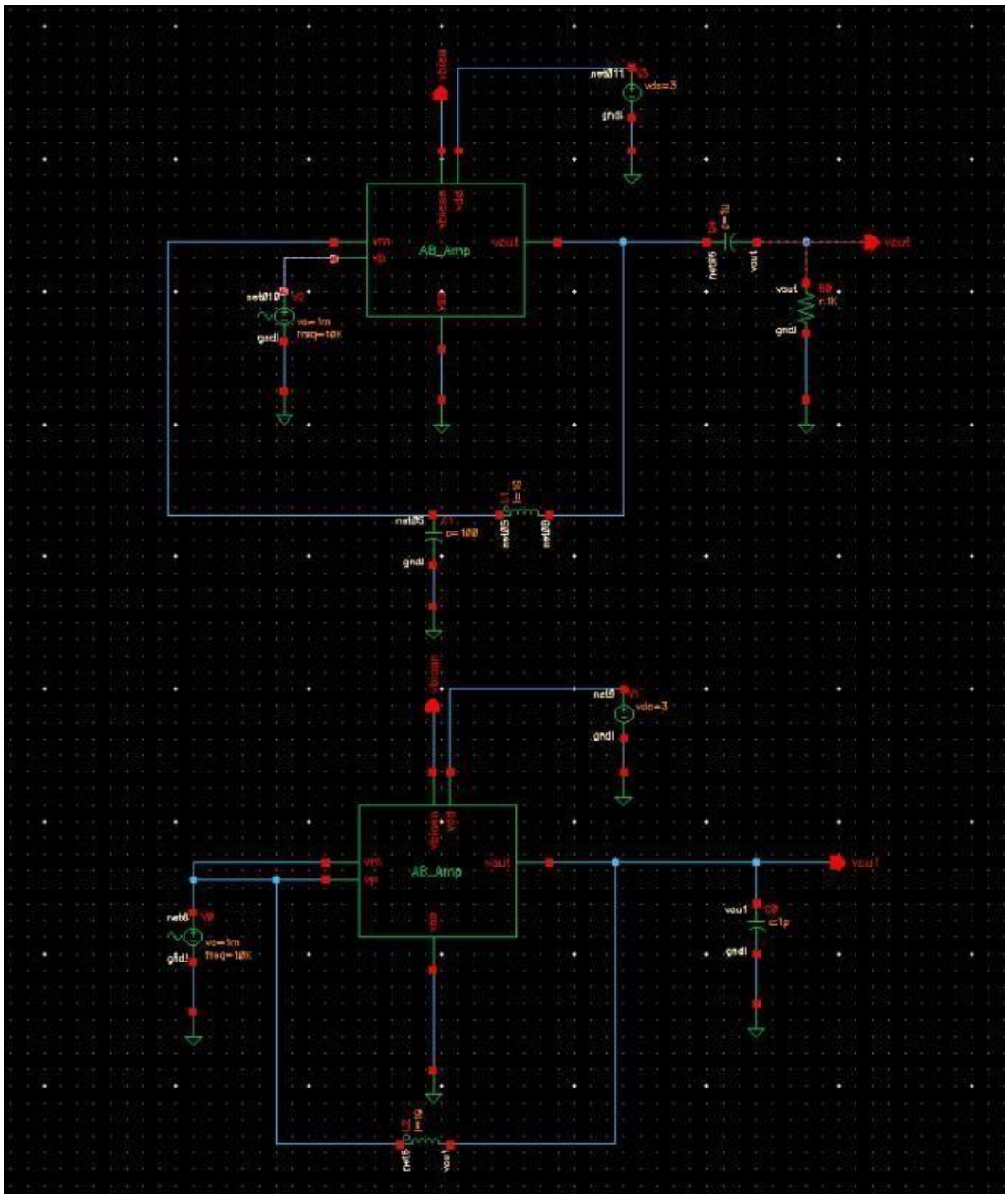

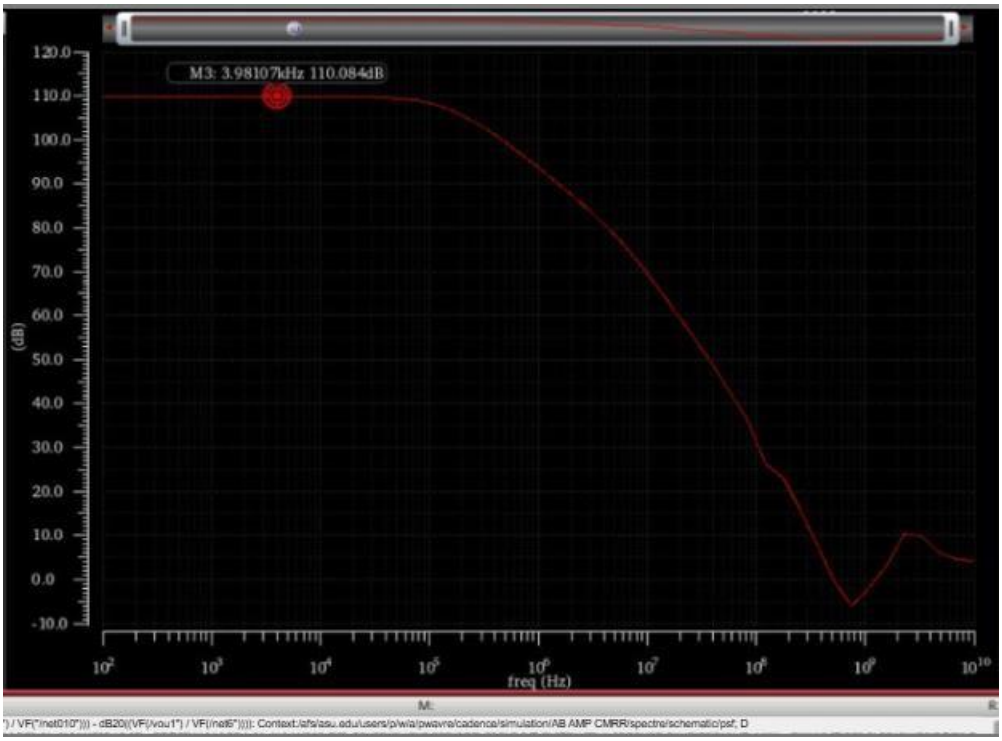

PSRR Schematic

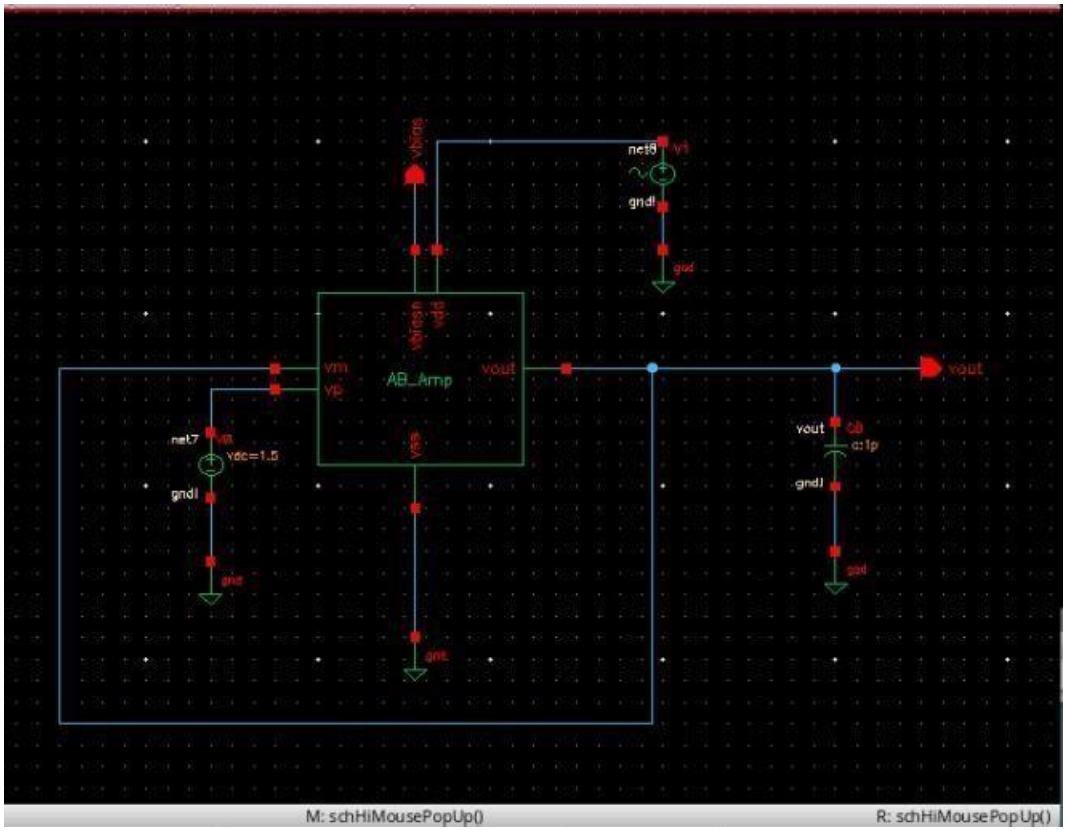

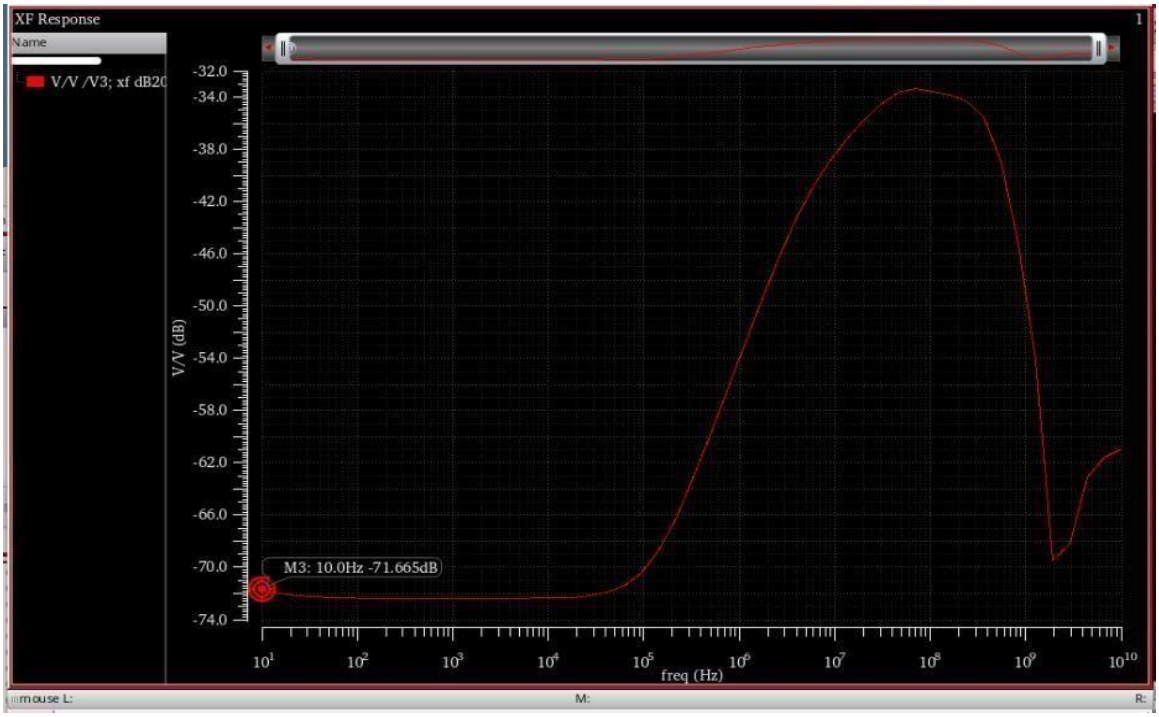
XF Response
Name
V/V /V3; xf dB20
V/V (dB)
-32.0
-34.0
-38.0
-42.0
-46.0
-50.0
-54.0
-58.0
-62.0
-66.0
-70.0
-74.0
M3: 10.0Hz -71.665dB
freq (Hz)
mouse L:
M:
R:

Open Loop Gain with VCm =1V

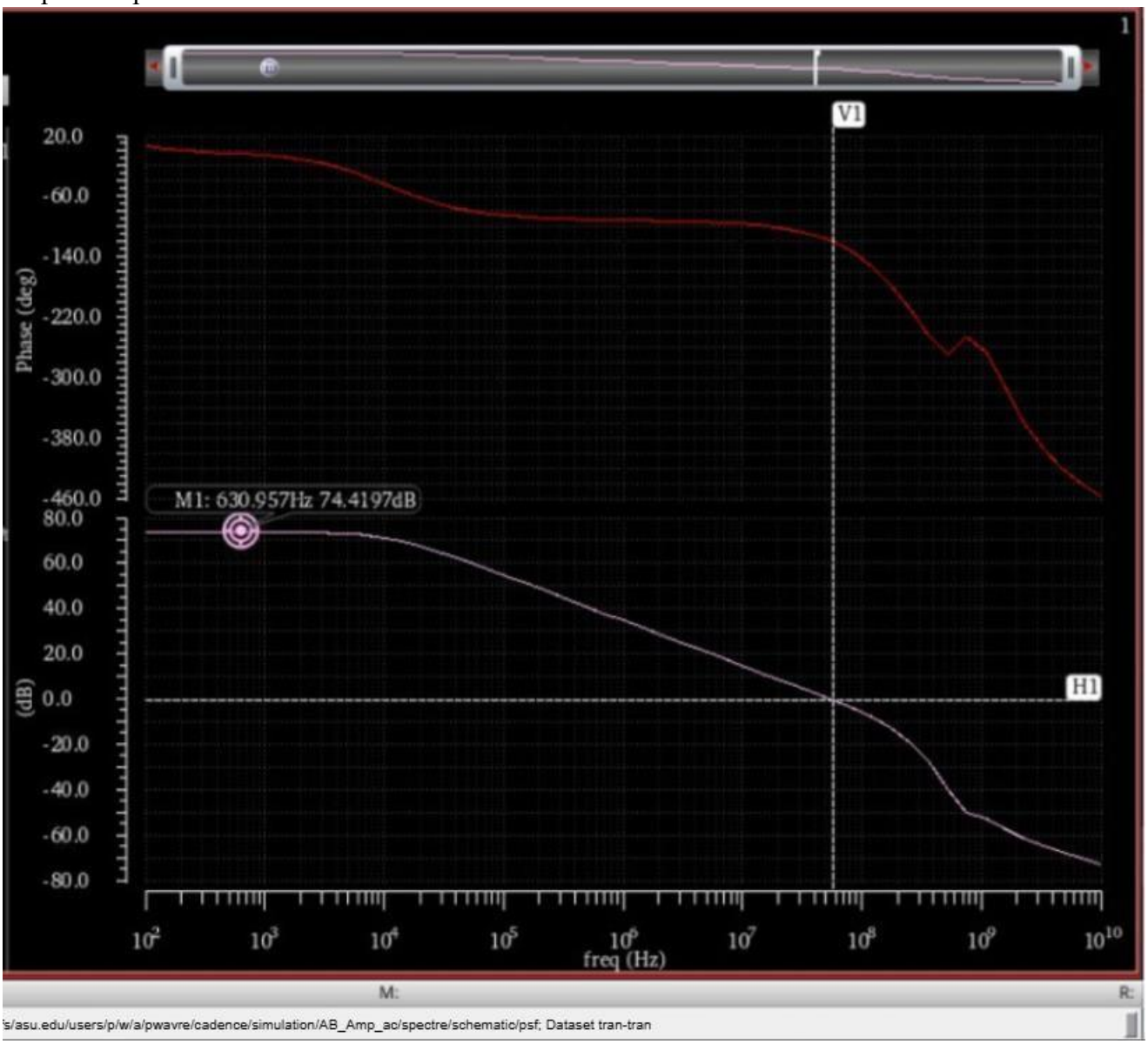

Open Loop Gain with VCm =1.2V

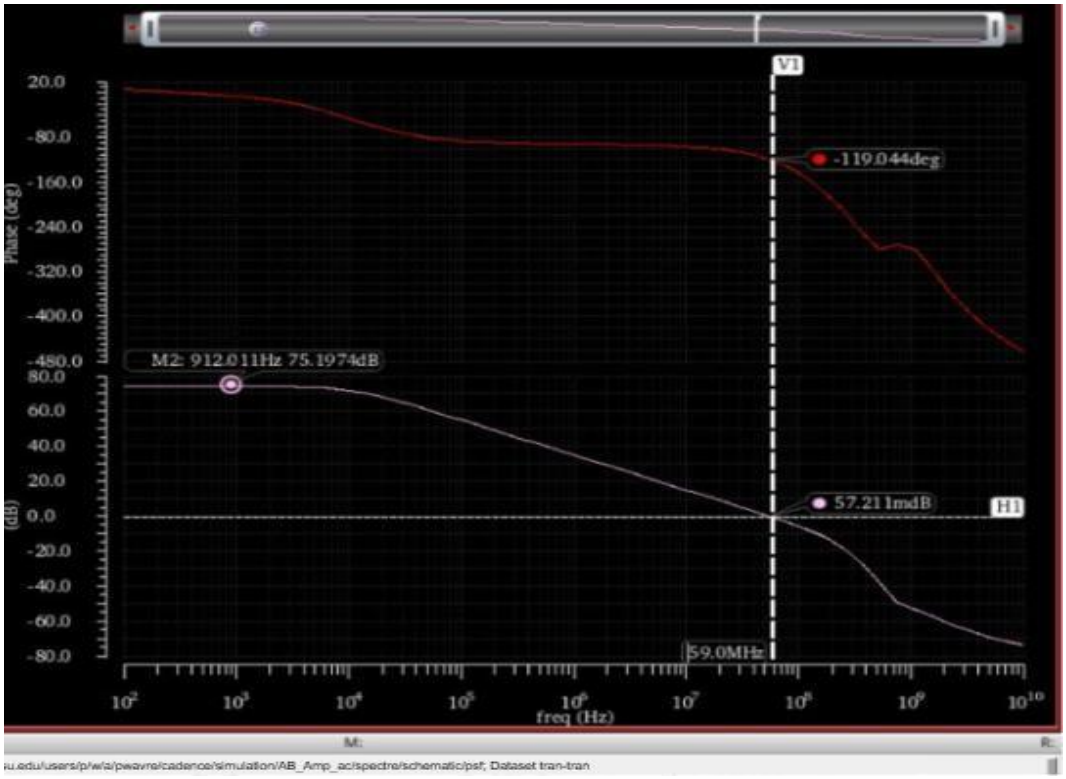

Open Loop Gain with VCm =1.4V

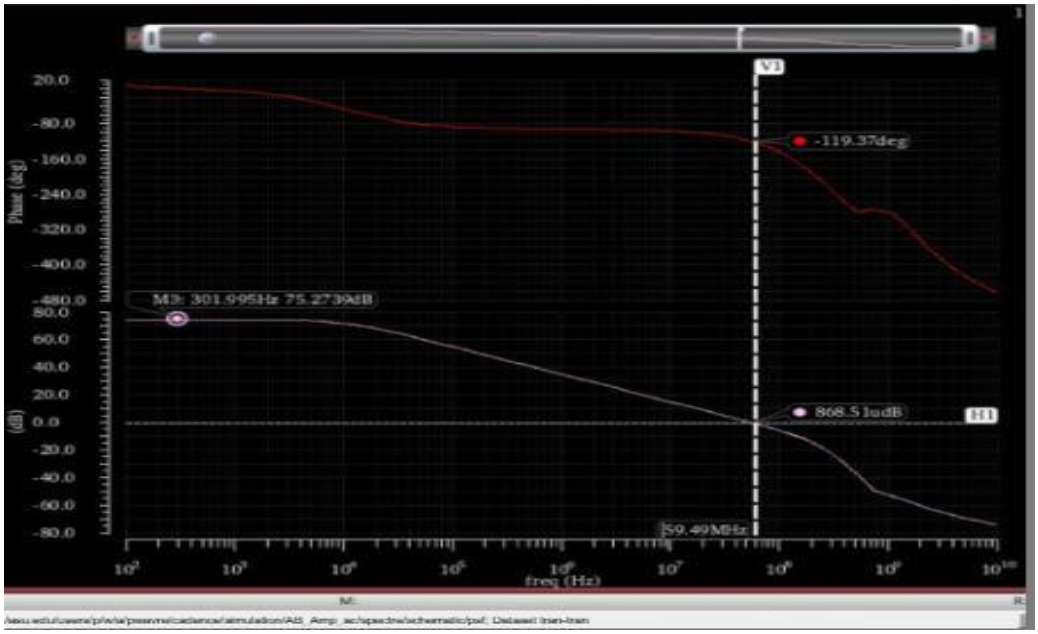

Open Loop Gain with VCm =1.6V

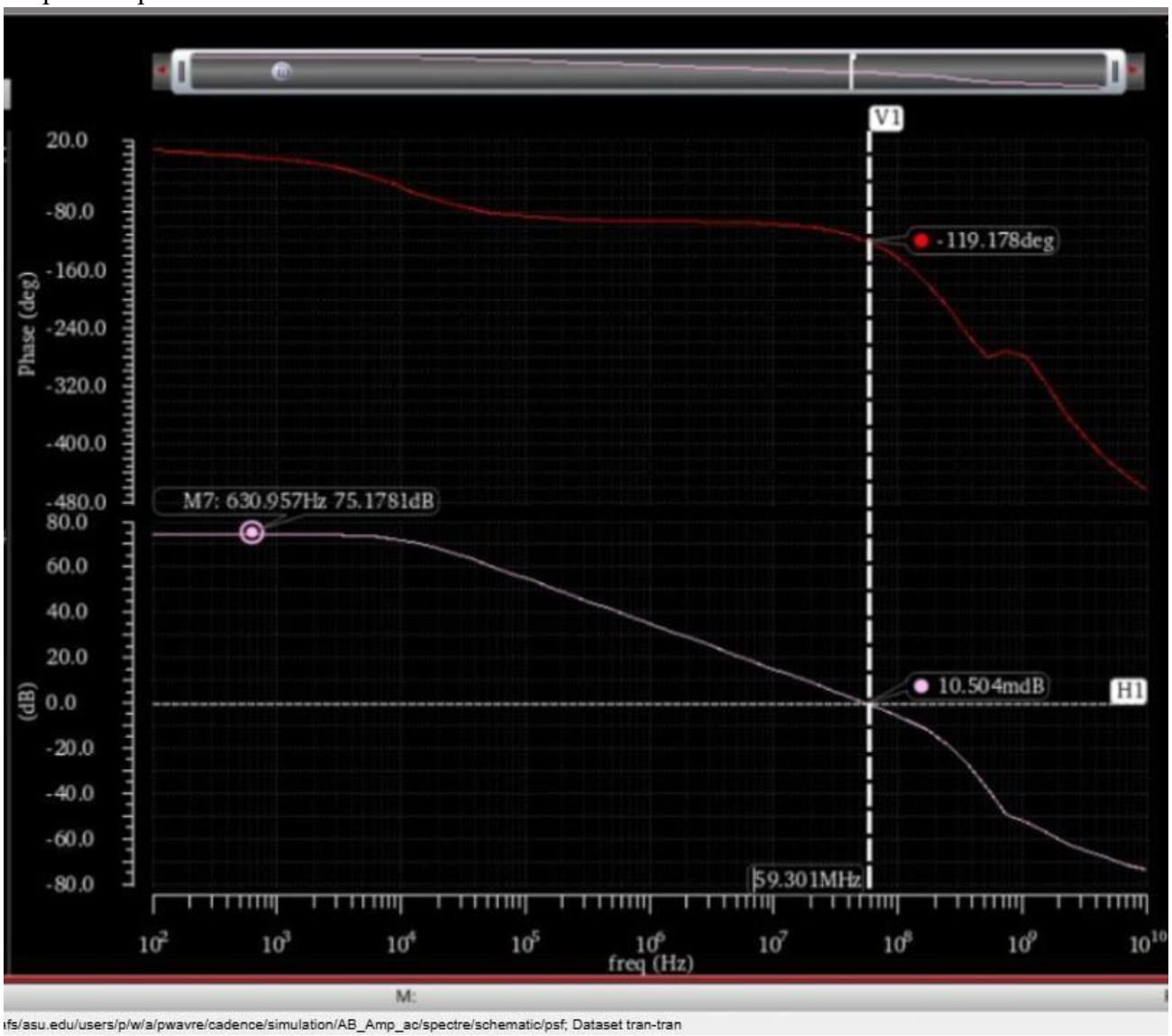

Open Loop Gain with VCm =1.8V

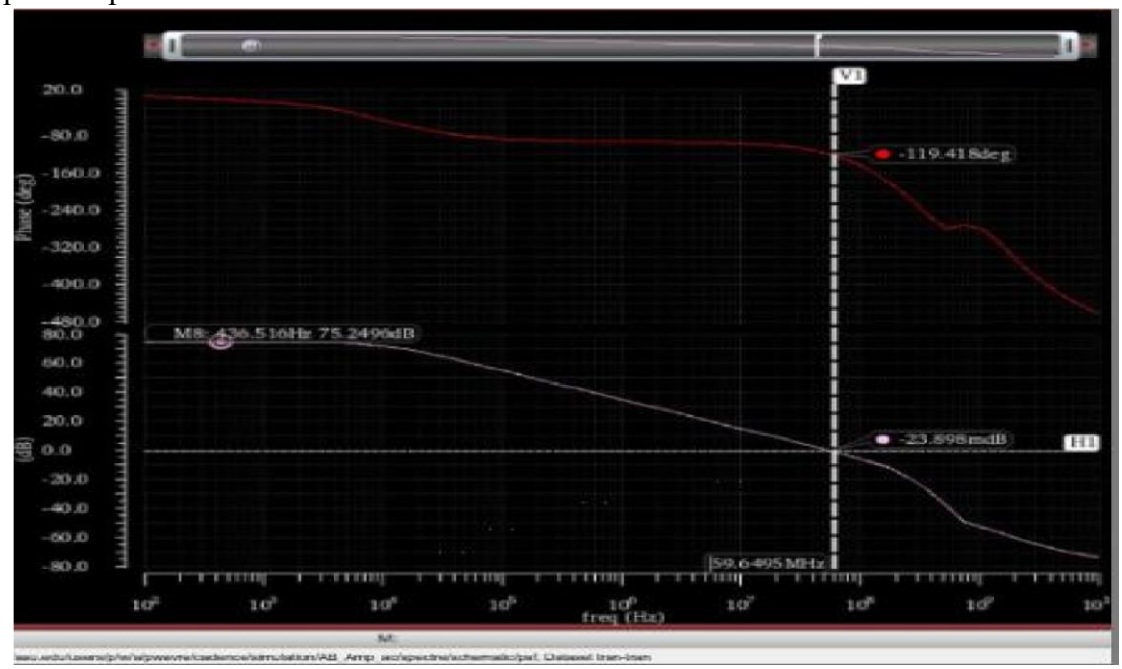

Open Loop Gain with VCm =2V

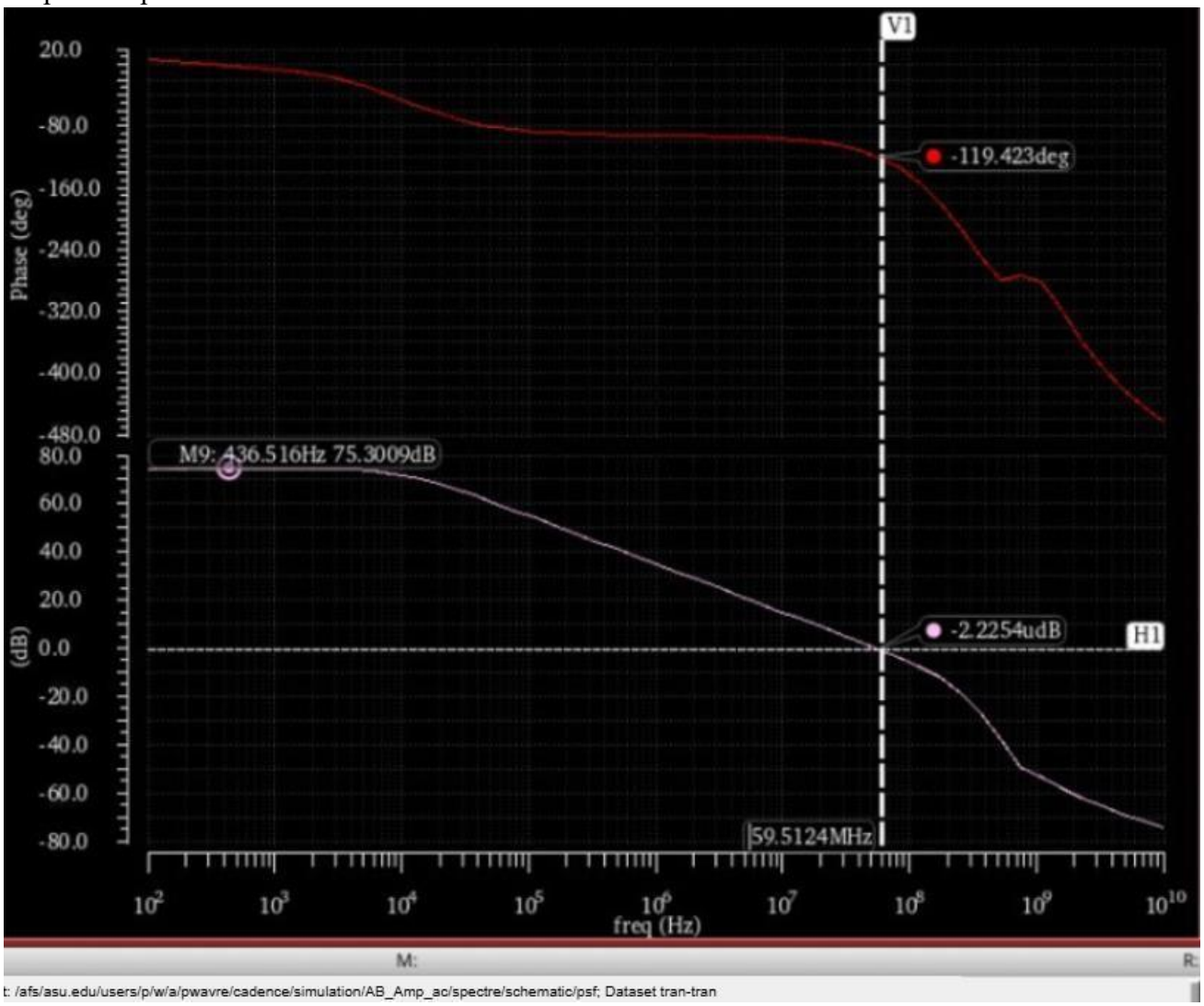

Open Loop Analysis with 200P Load Cap

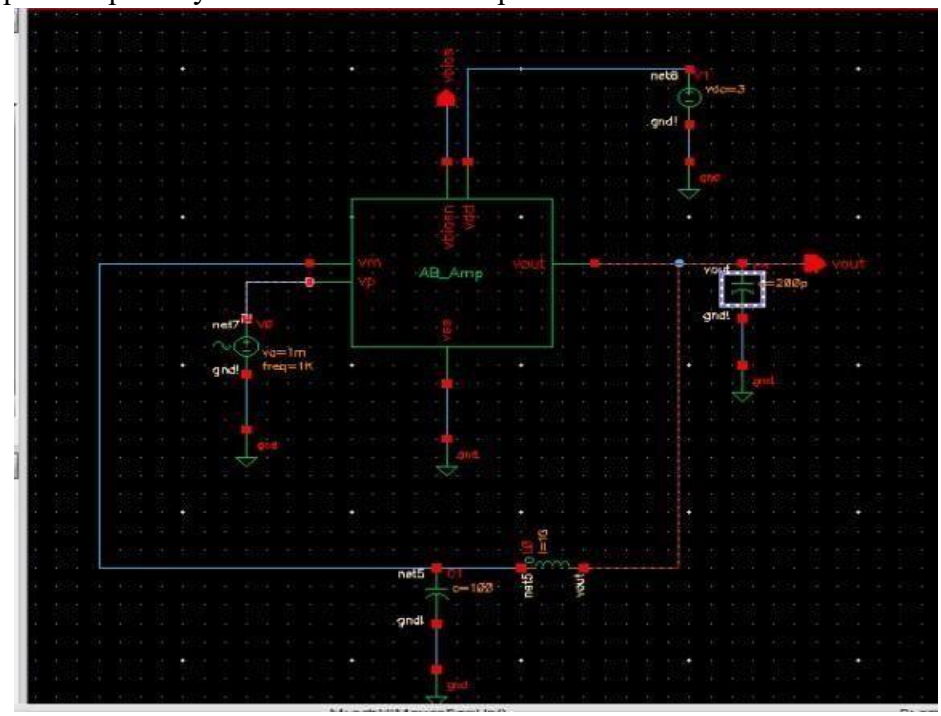

Open Loop Gain with VCm =1V

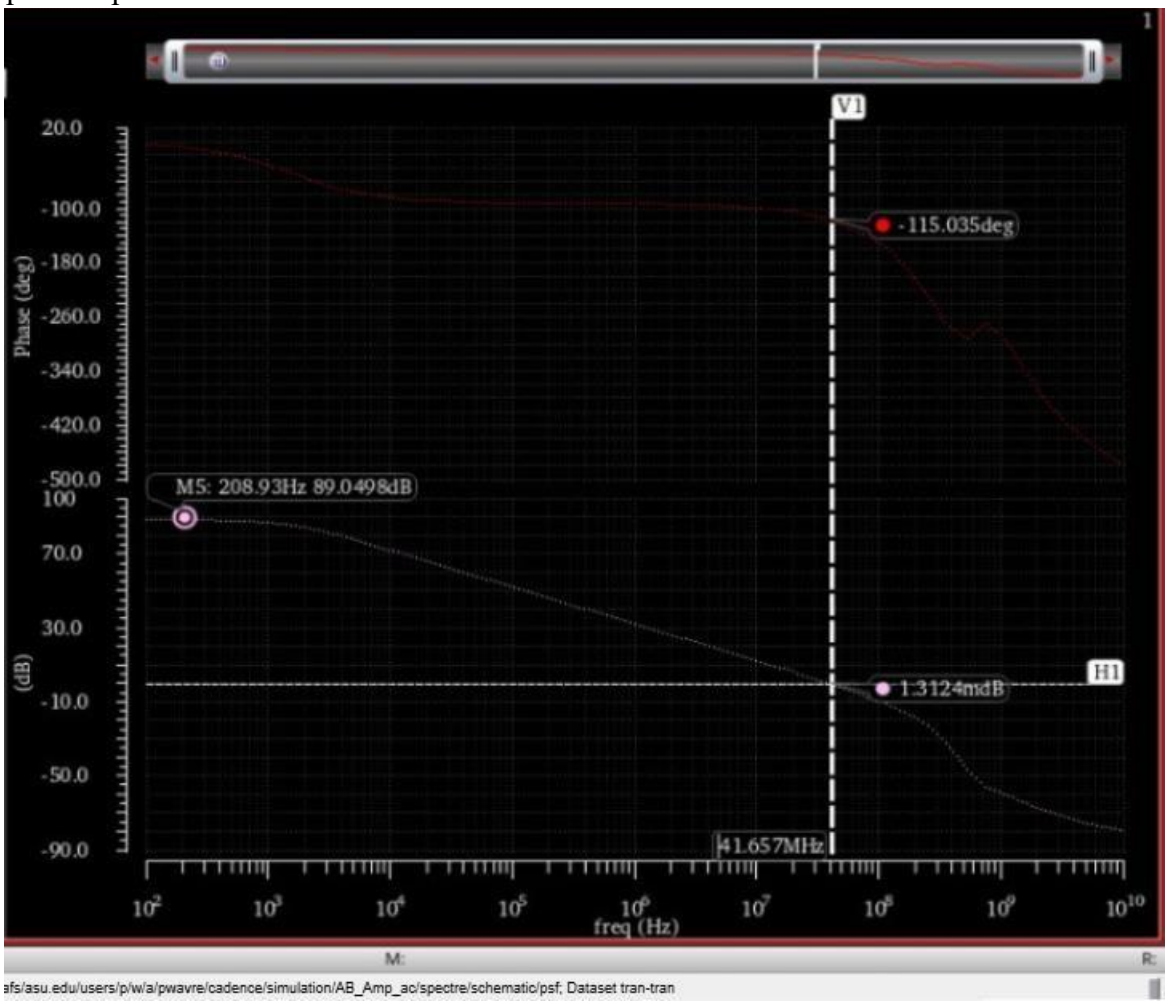

Open Loop Gain with VCm =1.2V

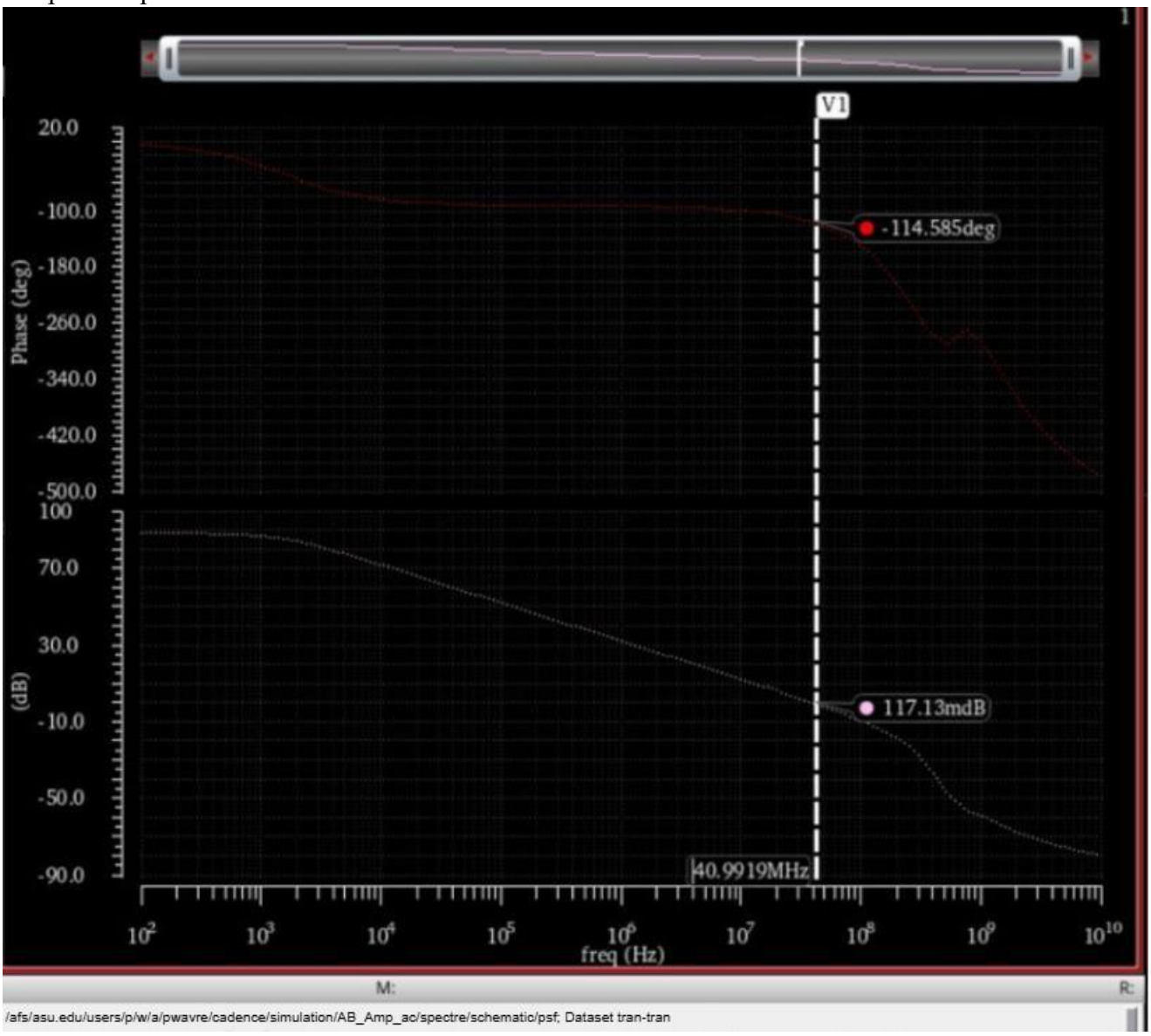

Open Loop Gain with VCm =1.4V

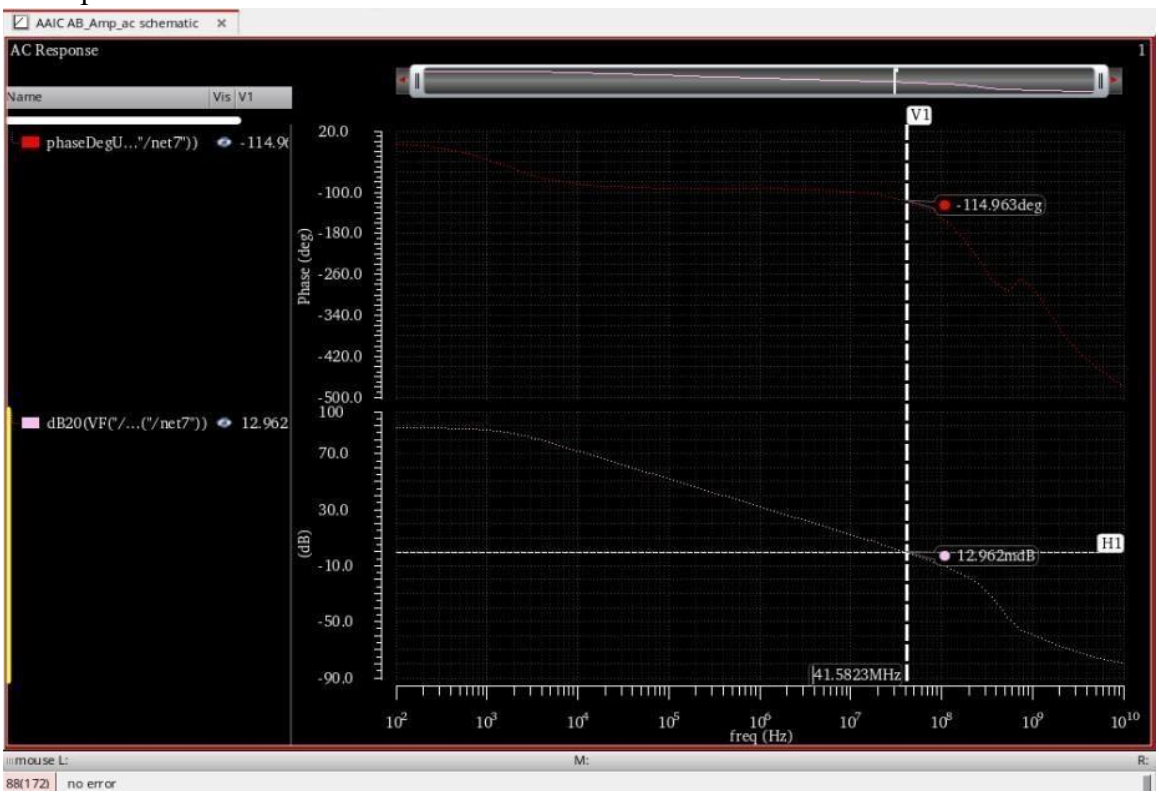

Open Loop Gain with VCm =1.6V

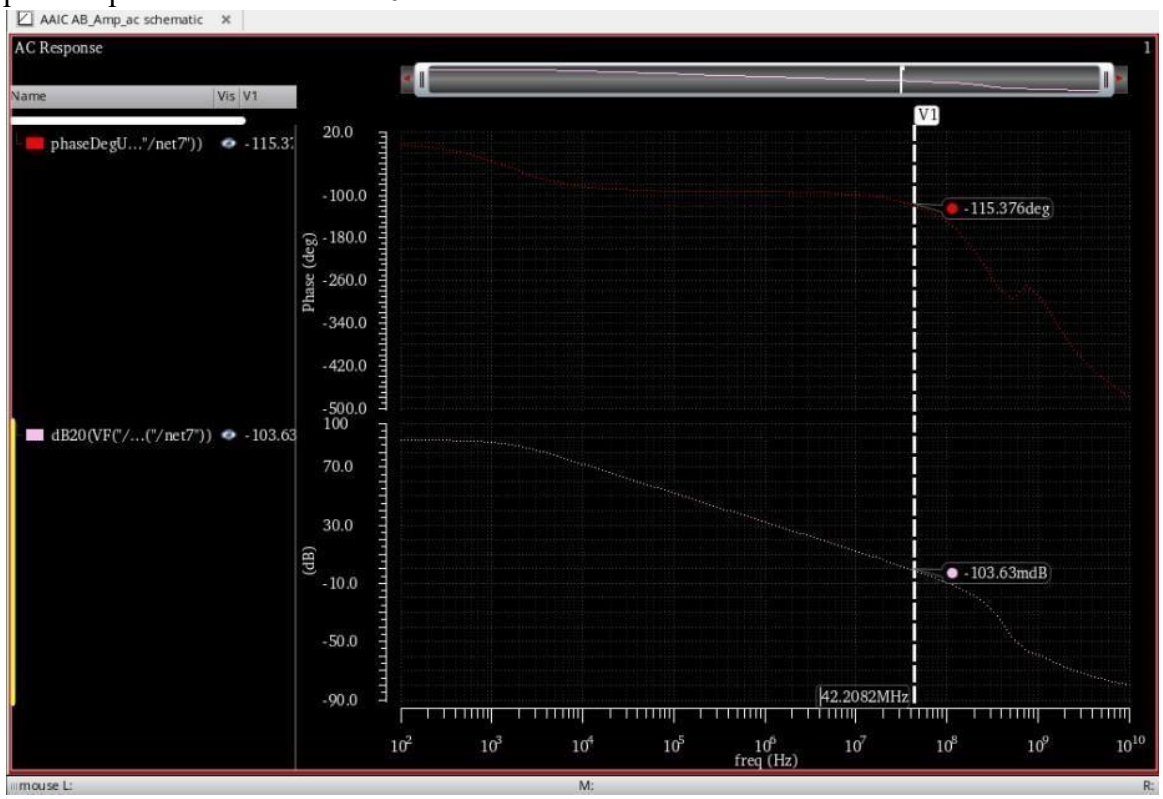

Open Loop Gain with VCm =1.8V

Open Loop Gain with VCm =2V

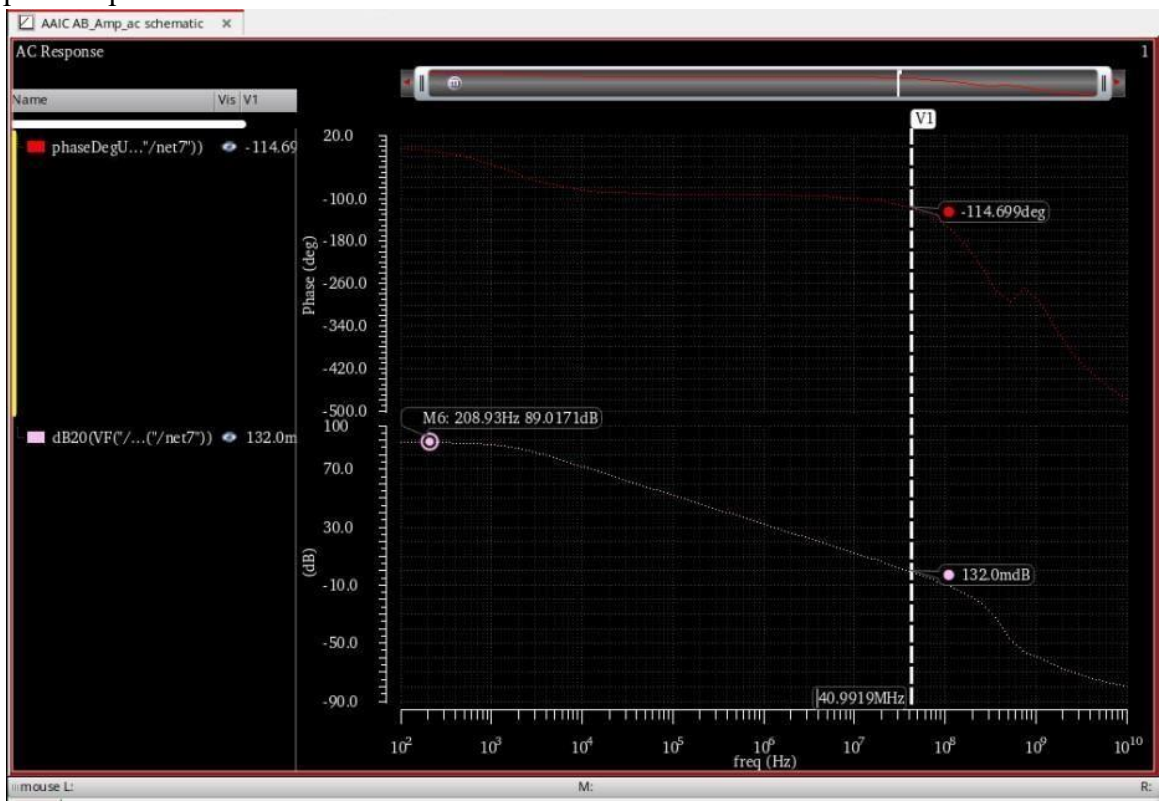
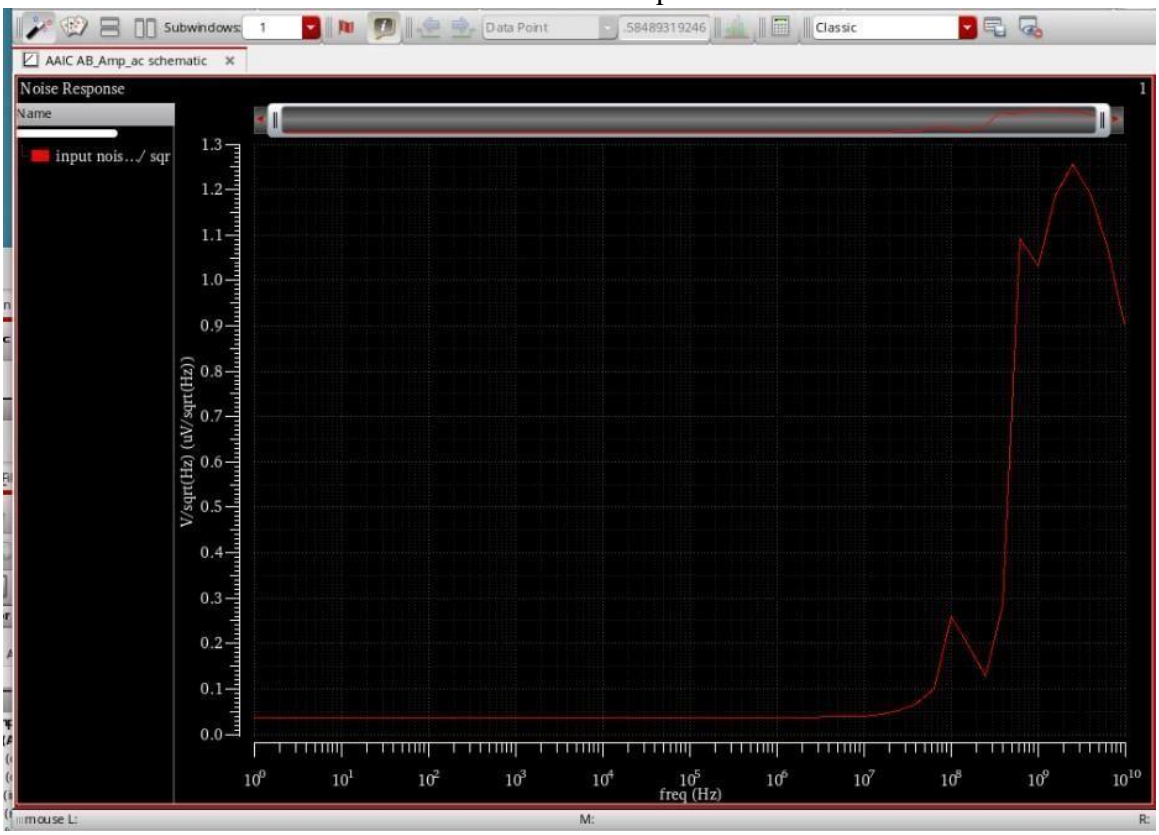
Input Referred Thermal Noise is referd tobe13.42nV/sqHz