In this project you'll be designing a Telescopic Cascode differential amplifier stage with all the necessary biasing circuits around it.

Basic architecture of the differential stage is given below. Please add all the necessary cascode biasing circuits generating Vbp1, Vbp2, Vbn1 and Vbn2 around this circuit using actual transistor level (diode connected) devices. You may or may not use a Beta-multiplier as your master source, a single ideal current source is OK also.

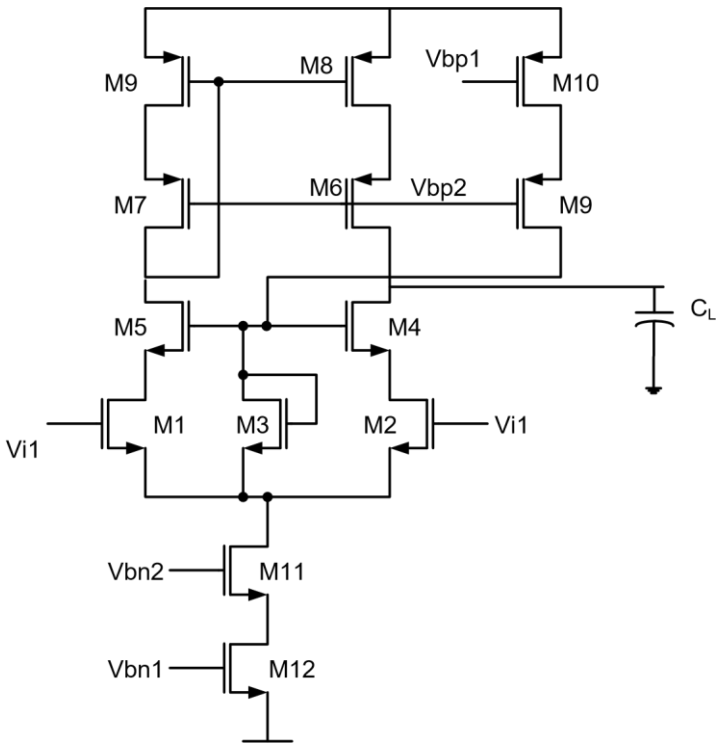

DESIGN SPECS:

Supply Range (VDD): 3.0-3.5V
Input Common Mode Range: 1.5V-2V
DC Gain: 50dB or more
Unity Gain Frequency: 50MHz or more with C_L=1pF
Tail current source: 40uA or less
Clearly Plot PSRR+, PSRR-, CMRR.
Plot Slew Rate (see below)

1)

Fig: Gain and phase plot for input of 1.5v

- Gain= 61.227dB and Phase Margin = (180-118.077)= 61.923 degrees
- BandWidth = 32.4779kHz and Unity Gain Frequency= 52.8347MHz

Fig: Gain and phase plot for a 1.6v input

- Gain= 61.227dB and Phase Margin = (180-118.09)= 61.91 degrees
- BandWidth = 32.8536kHz and Unity Gain Frequency= 52.8581MHz

Fig: Gain and phase plot for a 1.7v input

- Gain= 61.227dB and Phase Margin = (180-118.084)=61.916 degrees
- BandWidth = 33.14kHz and Unity Gain Frequency= 52.8461MHz

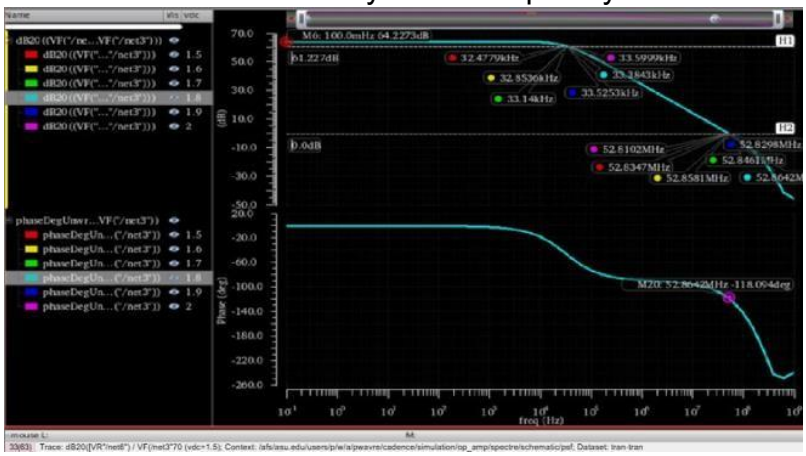

Fig: Gain and phase plot for a 1.8v input

- Gain= 61.227dB and Phase Margin = (180-118.094)=61.906 degrees
- BandWidth = 33.3843kHz and Unity Gain Frequency= 52.8642MHz

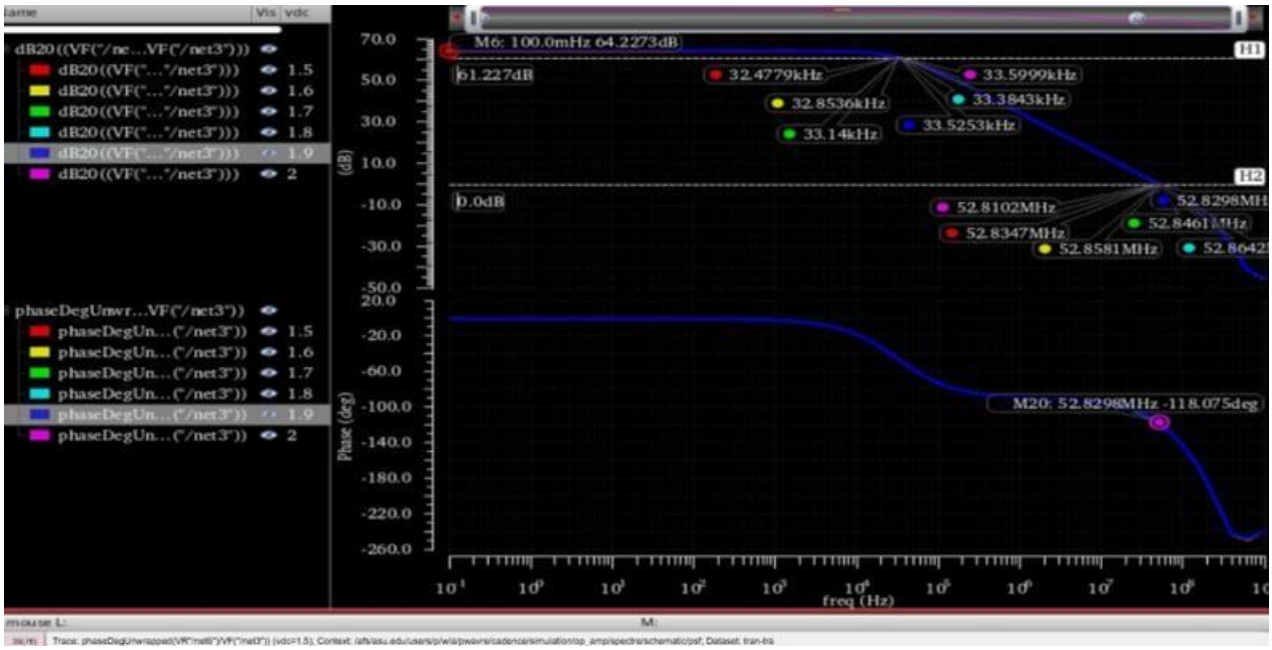

Fig: Gain and phase plot for a 1.9v input

- Gain= 61.227dB and Phase Margin = (180-118.075)=61.925 degrees
- BandWidth = 33.5253kHz and Unity Gain Frequency= 52.8298MHz

Fig: Gain and phase plot for a 2V input

- Gain= 61.227dB and Phase Margin = (180-118.064)=61.936 degrees
- Bandwidth = 33.5999kHz and Unity Gain Frequency= 52.8102MHz

2)

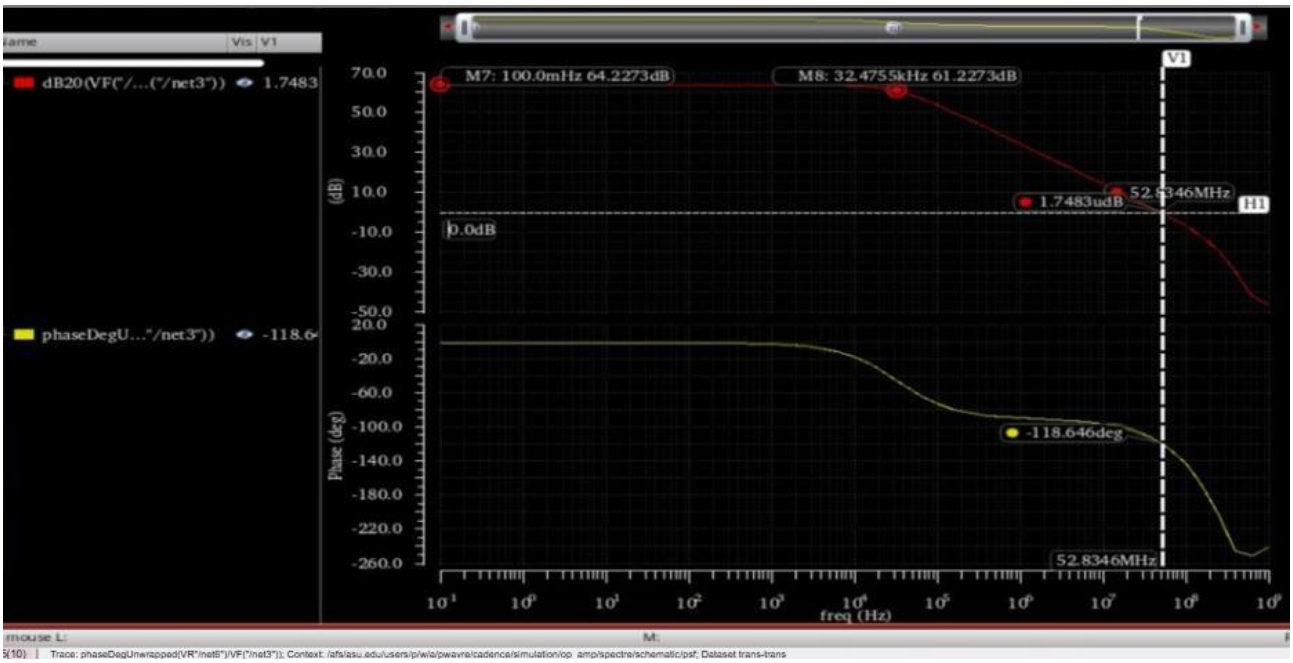

Fig: Gain and Phase Plot for a 1.5V input

- Gain= 61.2273dB and Phase Margin = (180-118.646)= 61.354 degrees
- Bandwidth = 32.4755kHz and Unity Gain Frequency= 52.8346MHz 3)

Bias Circuit with component parameters:

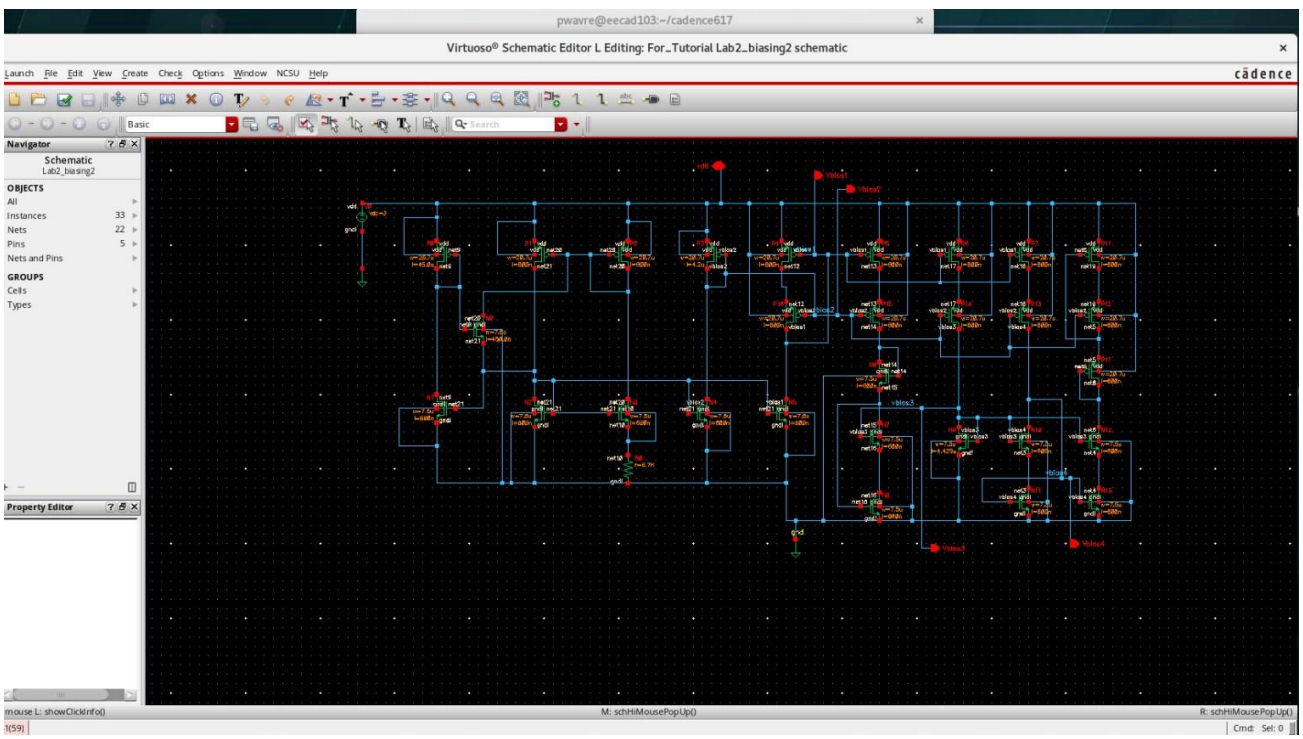

DC operating points of Bias Circuit:

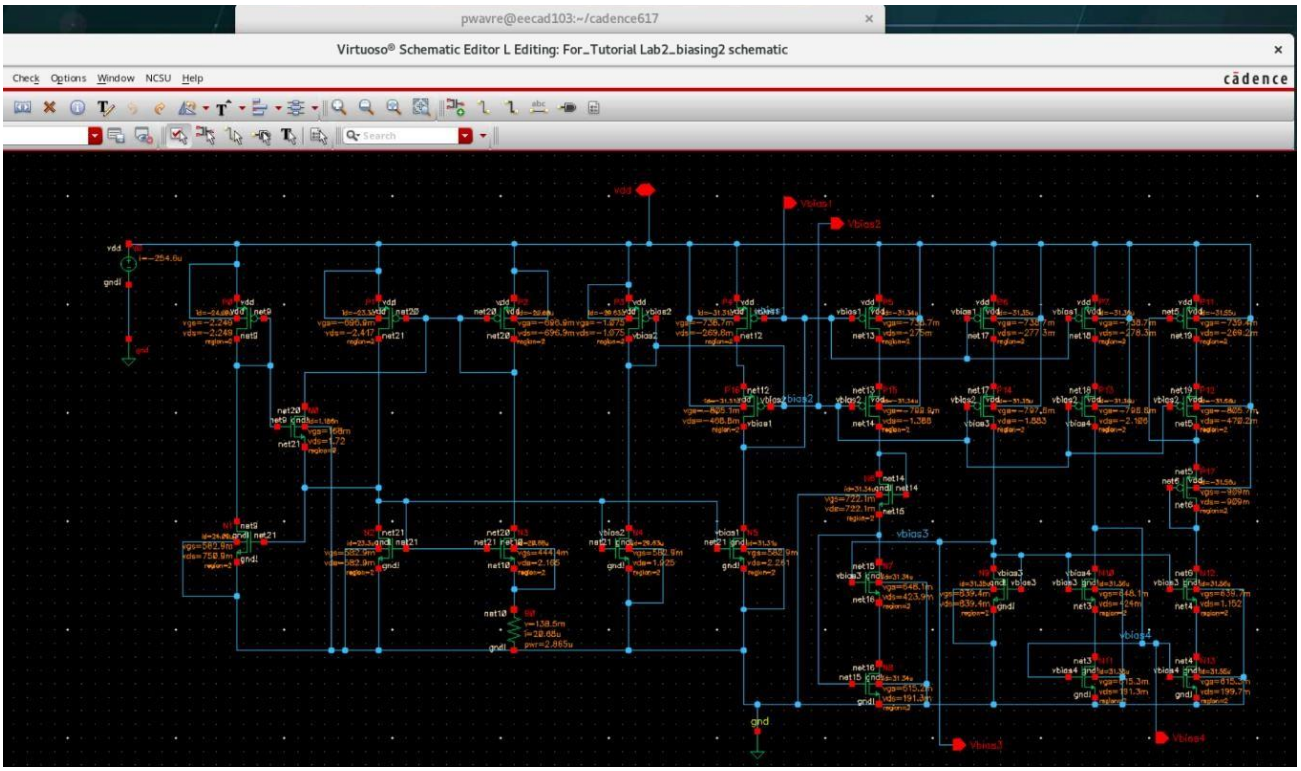

Component Parameters of Bias Circuit:

Device	W (m)	L (m)	No.of fingers	Multiplier
P0	20.7u	45u	2	1
P1	20.7u	600n	2	1
P2	20.7u	600n	2	1
P3	20.7u	4.2u	2	1
P4	20.7u	600n	2	1
P5	20.7u	600n	2	1
P6	20.7u	600n	2	1
P7	20.7u	600n	2	1
P8	20.7u	600n	2	1

P9	20.7u	600n	2	1
P10	20.7u	600n	2	1
P11	20.7u	600n	2	1
P12	20.7u	600n	2	1
P13	20.7u	600n	2	1
P14	20.7u	600n	2	1

Device	**W (m)**	**L (m)**	**No.of fingers**	**Multiplier**
N0	7.5u	450n	2	1
N1	7.5u	600n	2	1
N2	7.5u	600n	2	1
N3	7.5u	600n	2	1
N4	7.5u	600n	2	6
N5	7.5u	600n	2	1
N6	7.5u	600n	2	1
N7	7.5u	600n	2	1
N8	7.5u	600n	2	1
N9	7.5u	600n	2	1
N10	7.5u	600n	2	1
N11	7.5u	600n	2	1
N12	7.5u	600n	2	1
N13	7.5u	4.425u	2	1

Component Parameters of Telescopic Amplifier:

Device	W (m)	No.of fingers	L (m)	Multiplier
P0	8.025u	2	600n	1
P1	8.025u	2	600n	1
P2	450n	1	600n	2
P3	450n	1	600n	2
P4	8.025u	2	600n	1
P5	8.025u	2	600n	1
N0	90.45	2	600n	1
N1	7.125u	1	600n	1
N2	9.15u	2	600n	1
N3	9.15u	2	600n	1
N4	450n	1	3u	1
N5	90.45u	2	600n	1
N6	7.125u	1	600n	1

4) **DC operating points of Bias Circuit:**

Device	VGS (V)	VDS (V)	Ibias (A)
P0	-2.249	-2.249	-24.09u
P1	-696.9m	-2.417	-23.3u
P2	-696.9m	-696.9m	-20.68u
P3	-1.075	-1.075	-20.63u
P4	-736.7m	-132.8m	-31.3u
P5	-736.7m	-1.388	-31.3u

P6	-736.7m	-277.3m	-31.35u
P7	-738.7m	-1.883	-31.35u
P11	-739.4m	-269.2m	-31.36u
P12	-805.7m	-470.2m	-31.36u
P17	-909m	-909m	-31.55u
P13	-796.6m	-2.106m	-31.55u
P14	-797.5m	-1.883m	-31.55u
P15	-799.9m	-1.388	-31.3u
P16	-805.1m	-468.8m	-31.3u

Device	**VGS (V)**	**VDS (V)**	**Ibias (A)**
N0	168.8m	1.72	1.186u
N1	582.9m	750.9m	24.09u
N2	582.9m	582.9 m	29.63u
N3	444.4m	2.196	23.3u
N4	582.9m	1.965	20.66u
N5	582.9m	1.925	31.34u
N6	722.3m	722.9m	31.34u
N7	648m	4243m	31.34u
N8	615.2m	191.3m	31.35u
N9	839m	839m	31.36u
N10	648.1mm	424m	31.36u

N11	615.2m	191.3m	31.55u
N12	639.7m	1.152	31.55u
N13	615.3m	199.7m	31.31u

DC operating points of Telescopic Amplifier:

Device	**VGS (V)**	**VDS (V)**	**Ibias (A)**
P0	-19.1m	-233m	-18.56u
P1	-186m	-555.3m	-18.56u
P2	-158.5m	-274.1m	-1.382u
P3	-157.3m	-445.1m	-1.382u
P4	-184.1m	-234.5m	-18.57u
P5	-29.95m	-765.3m	-18.57u
N0	-29.95m	127.1m	18.56u
N1	110.9m	751.1m	18.56u
N2	146.1m	1.134	38.52u
N3	154m	199.5m	38.52u
N4	289.1m	947.3m	1.382u
N5	-29.55m	124.7m	18.57u
N6	112m	542m	18.57u

DC operating points of Telescopic Amplifier:

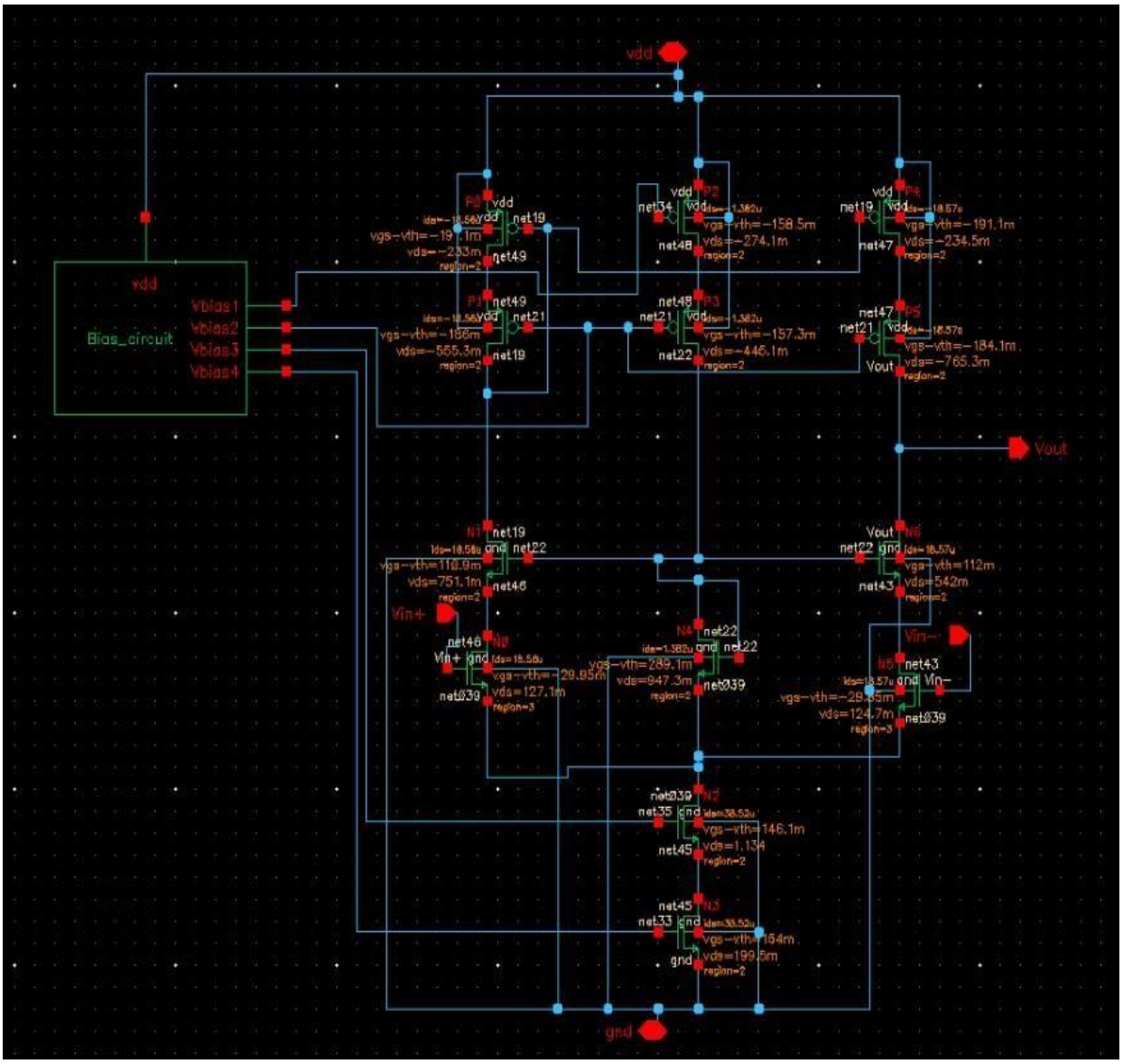
vdd
Bias_circuit
Vbias1
Vbias2
Vbias3
Vbias4
Vout
Vin+
Vin-
gnd

Name: Pankaj Wavre
ASU ID: 1233978761
ADVANCED ANALOG IC DESIGN - PROJECT 2

Telescopic Amplifier with component parameters:

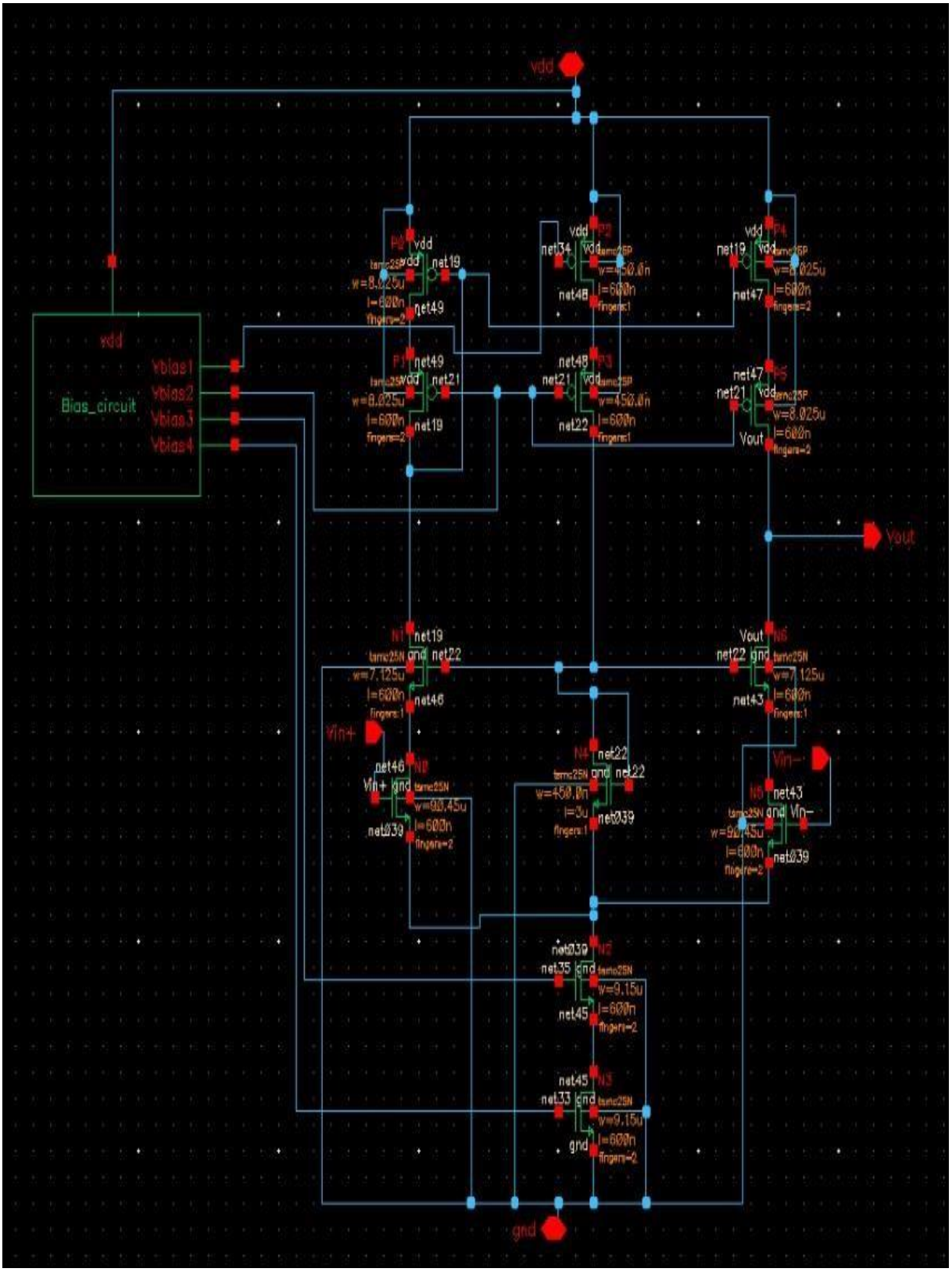

5) **Schematic of PSRR+:**

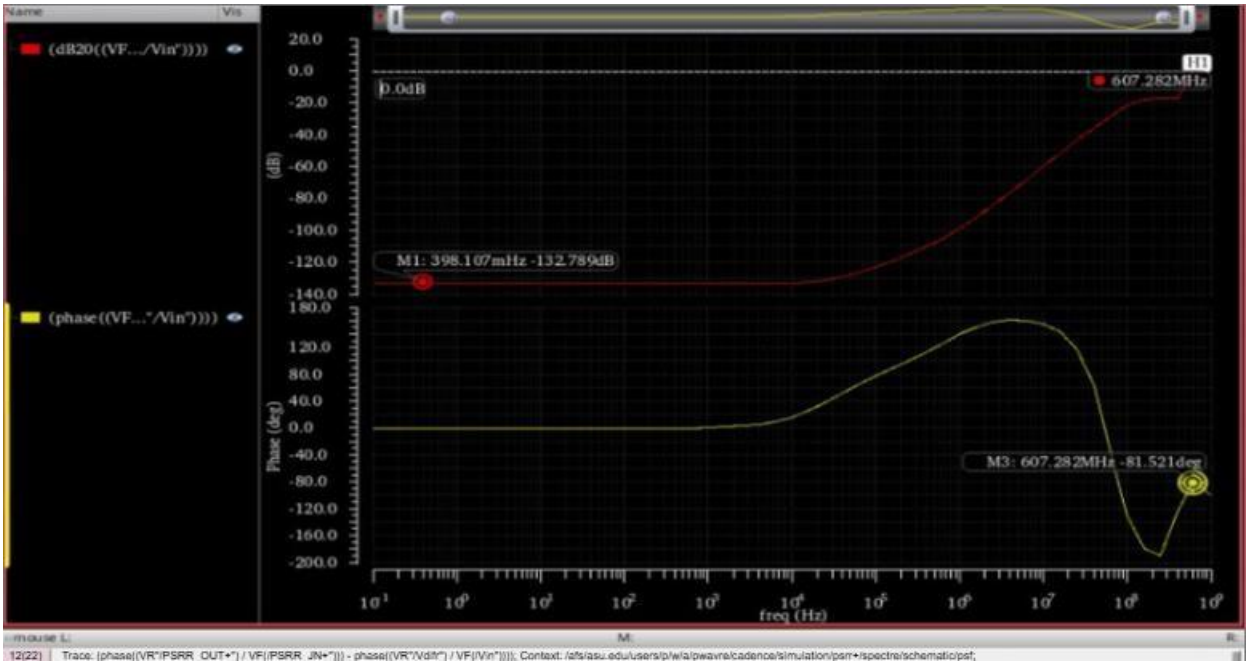

Fig: Gain and Phase Plot

- Gain= -132.789dB, Phase Margin = (180-118.646)= 98.479 degrees

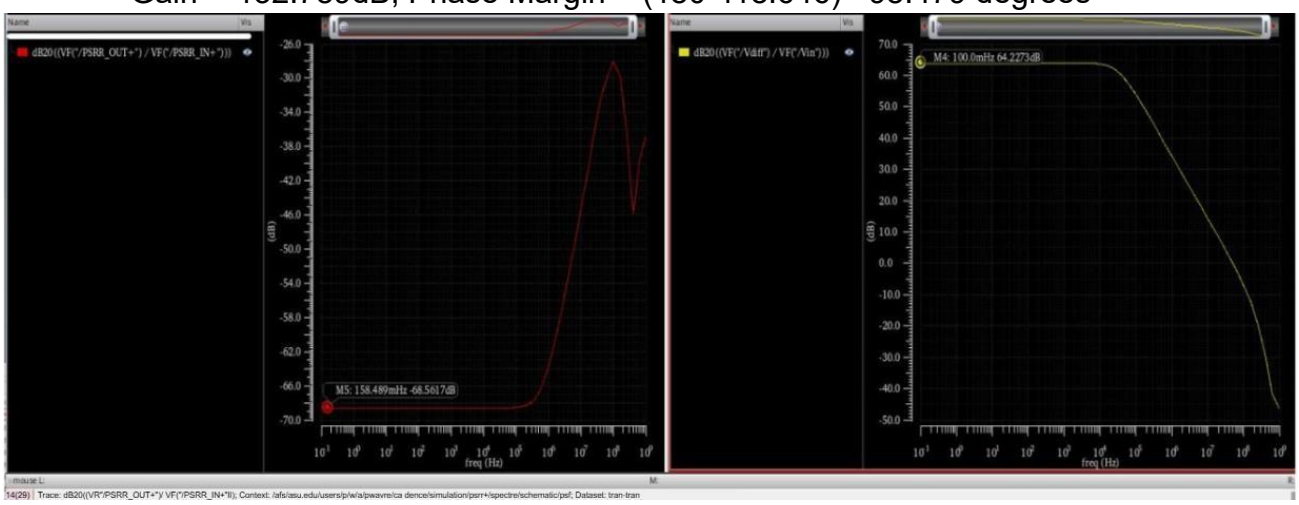

Fig: Gain Plots for PSRR+

- Gain=((dB20(PSRR_OUT+)-dB20(PSRR_IN+)) - (dB20(Vdiff)dB20(Vin))) = (-68.5671-64.2273)= -132.8944dB **Schematic of PSRR- :**

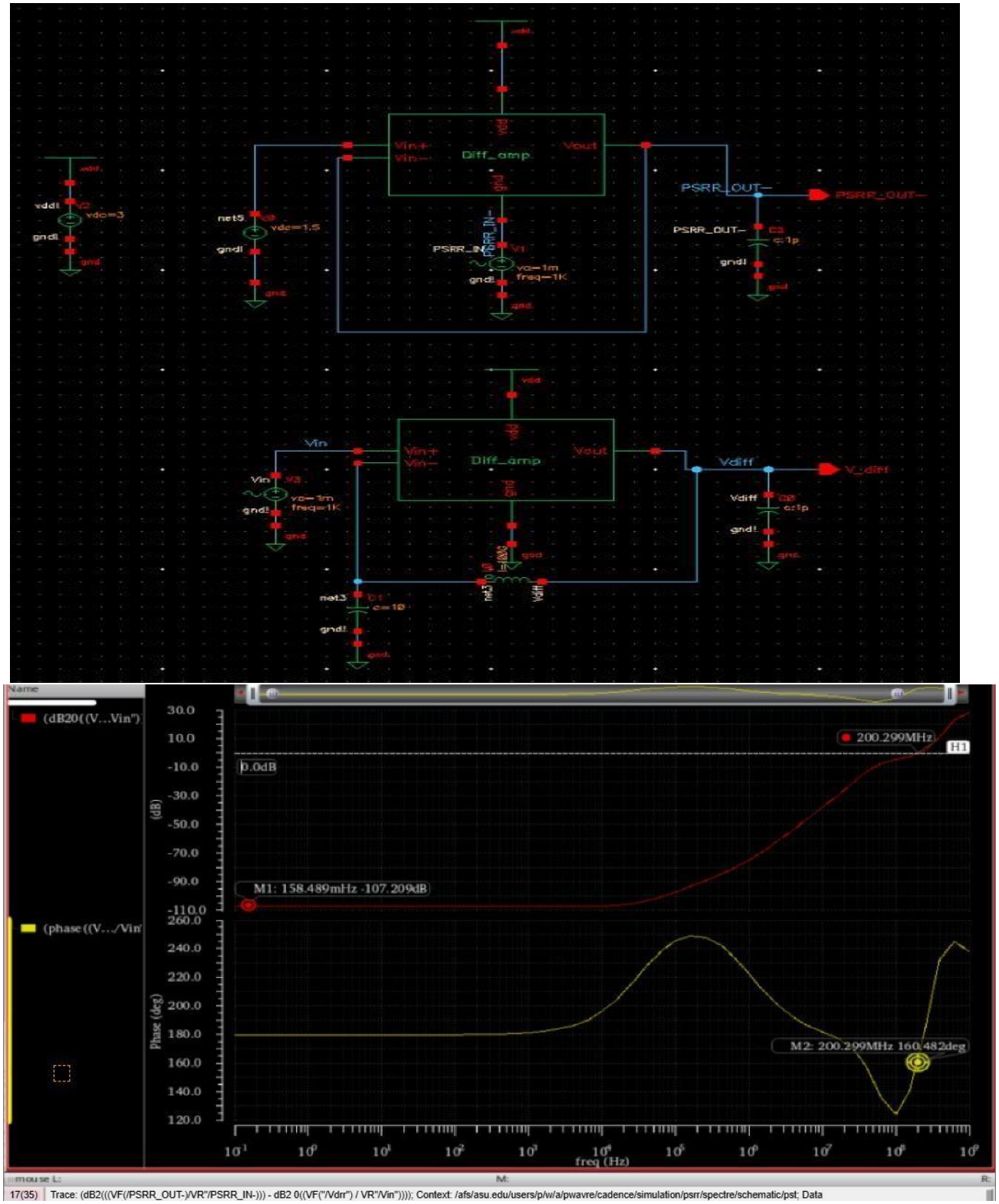

Fig: Gain and Phase Plot of PSRR-

- Gain= -107.209dB, Phase Margin = (180-160.482)= 19.518 degrees

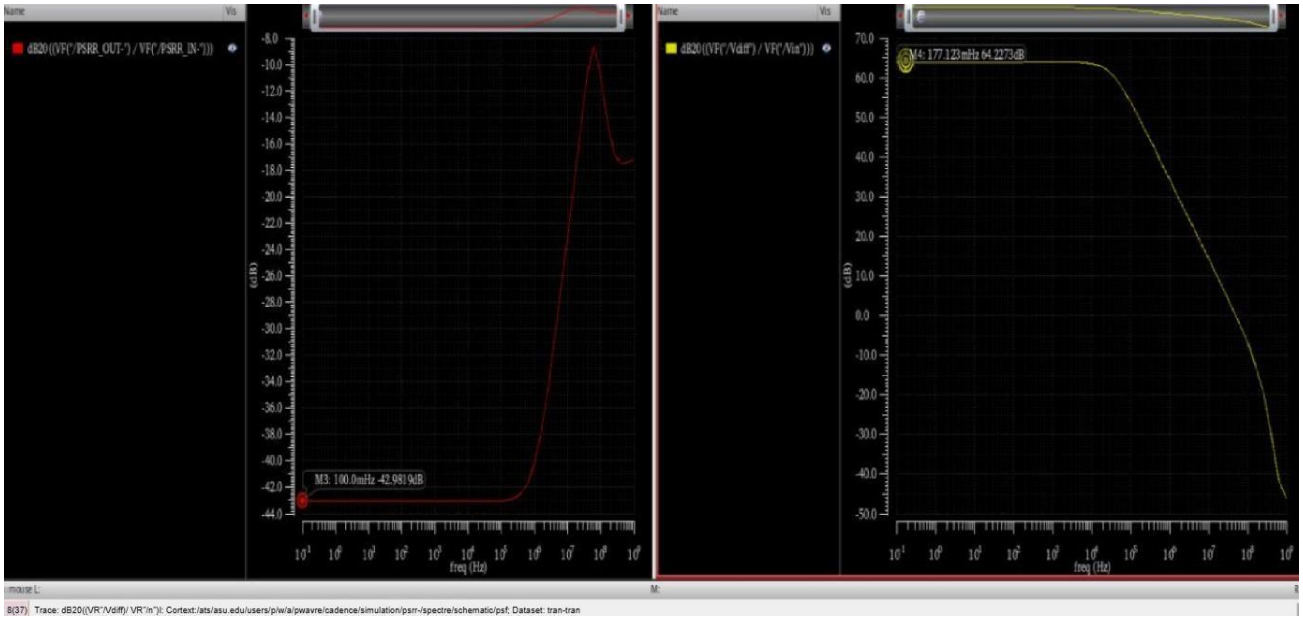

Fig: Gain Plots for PSRR-

- Gain=((dB20(PSRR_OUT-)-dB20(PSRR_IN-)) - (dB20(Vdiff)dB20(Vin)))
  = (-42.9819-64.2273)= -107.2092dB **Schematic**

of CMRR :

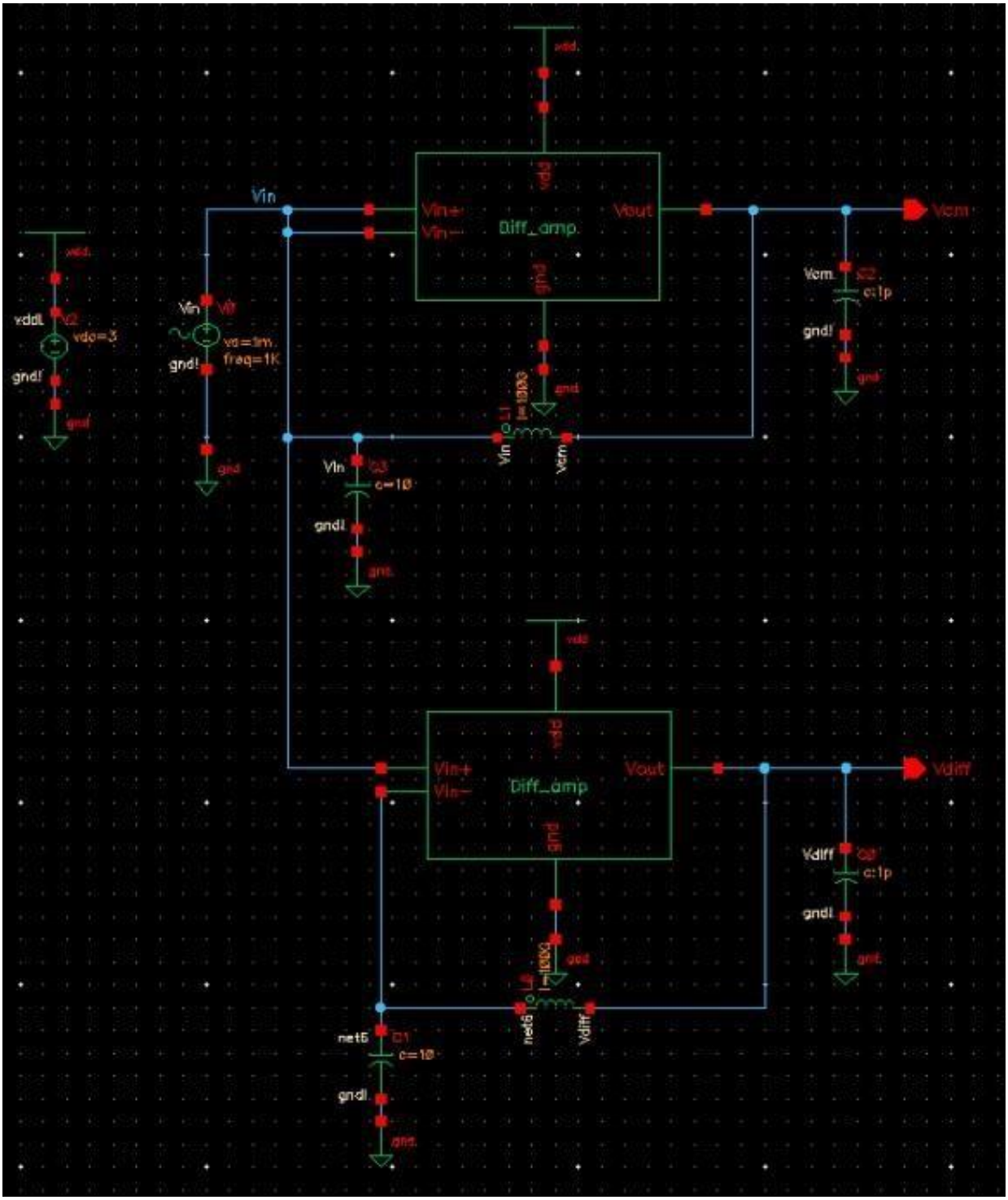
vdd
Vin
Vin+
Vin−
Diff_amp
Vout
Vcm
gnd
vddL
V2
vdc=3
gnd!
Vin
V0
va=1m
freq=1K
C2
c=1p
L1
l=1000
C3
c=10
Vdiff
net6
C1
Diff_amp
L0
net6
Vdiff

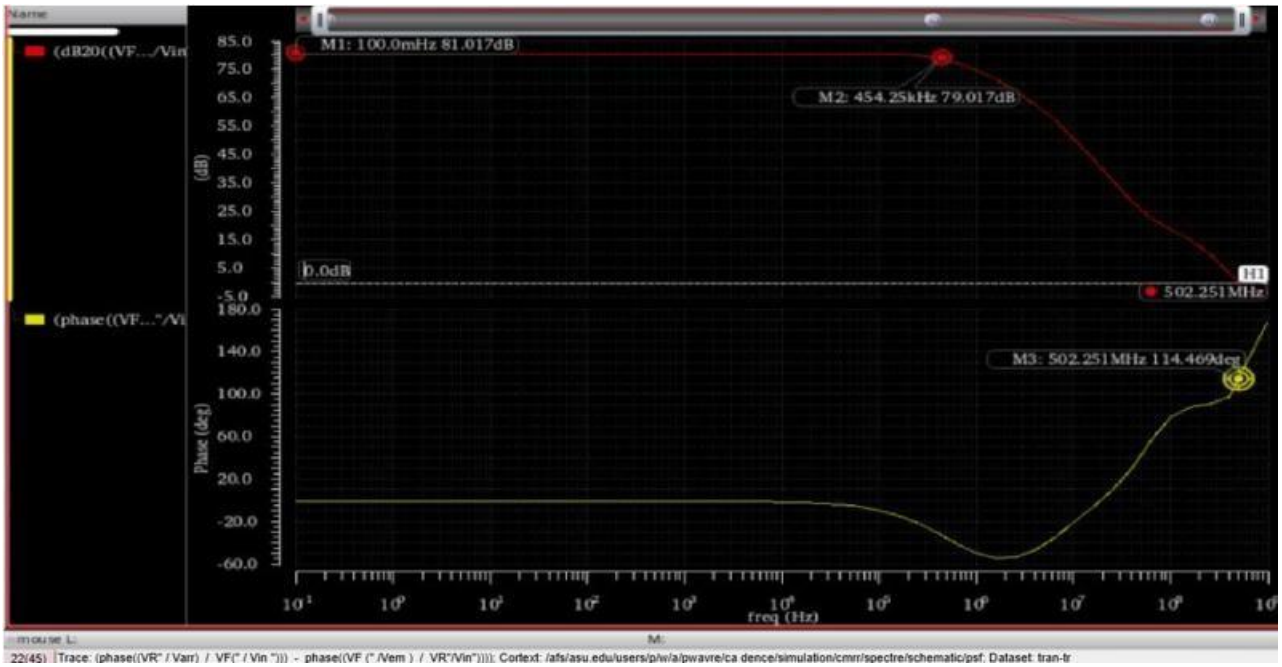

Fig: Gain and Phase Plot of CMRR

- Gain= 79.017dB, Phase Margin = (180-160.482)= 19.518 degrees

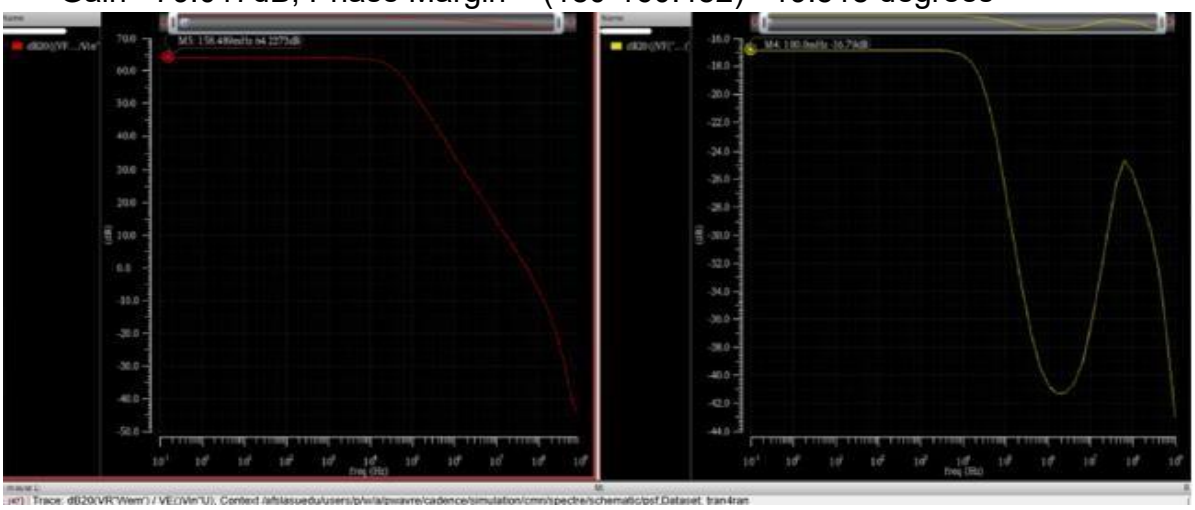

Fig: Gain Plots for CMRR

- Gain= ((dB20(Vdiff)- dB20 (Vin))-(dB20(Vcm)- dB20(Vin)))= (-64.2273-16.79)= 81.0173dB

6) **Schematic of Transient Analysis for 1kHz input signal:**

Fig: Transient Analysis for output 0.3vpp with 1kHz input signal

- Vin_{p-p}= (1.644v-1.3551v)=0.2889v,$Vout_{p-p}$= (1.6488v-1.3512v)=0.2976v

7) **Schematic for Slew rate with step input:**

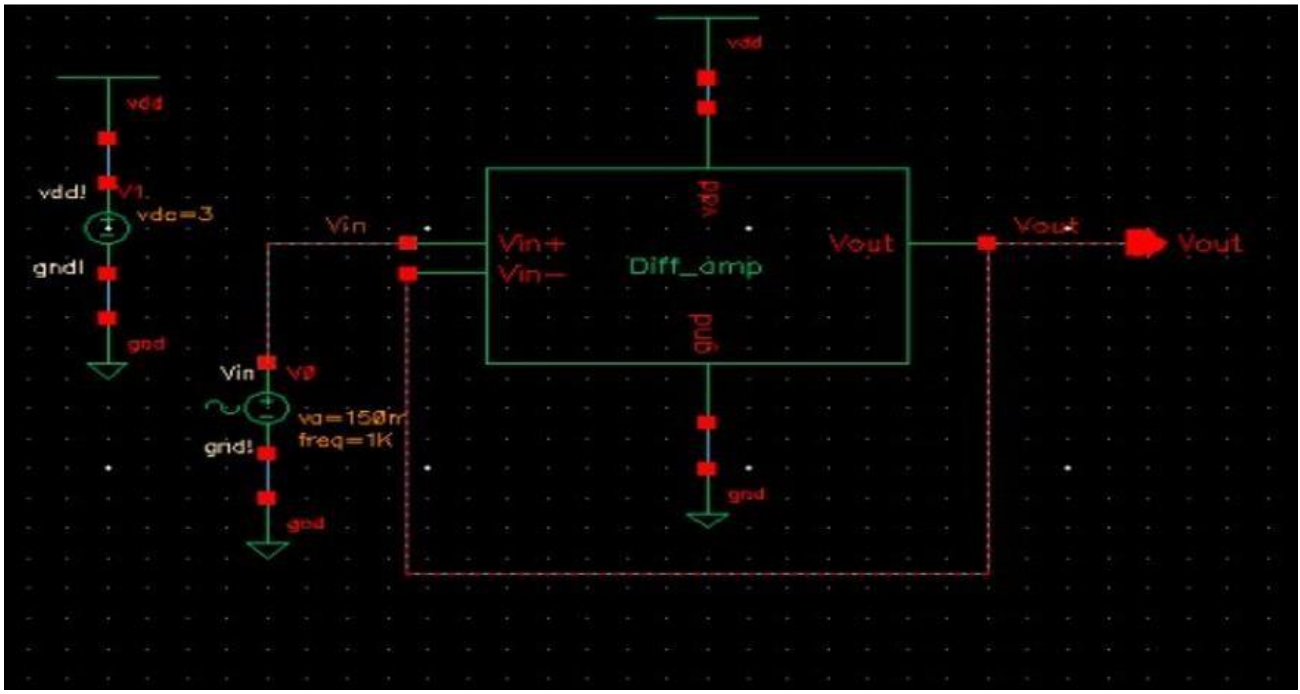

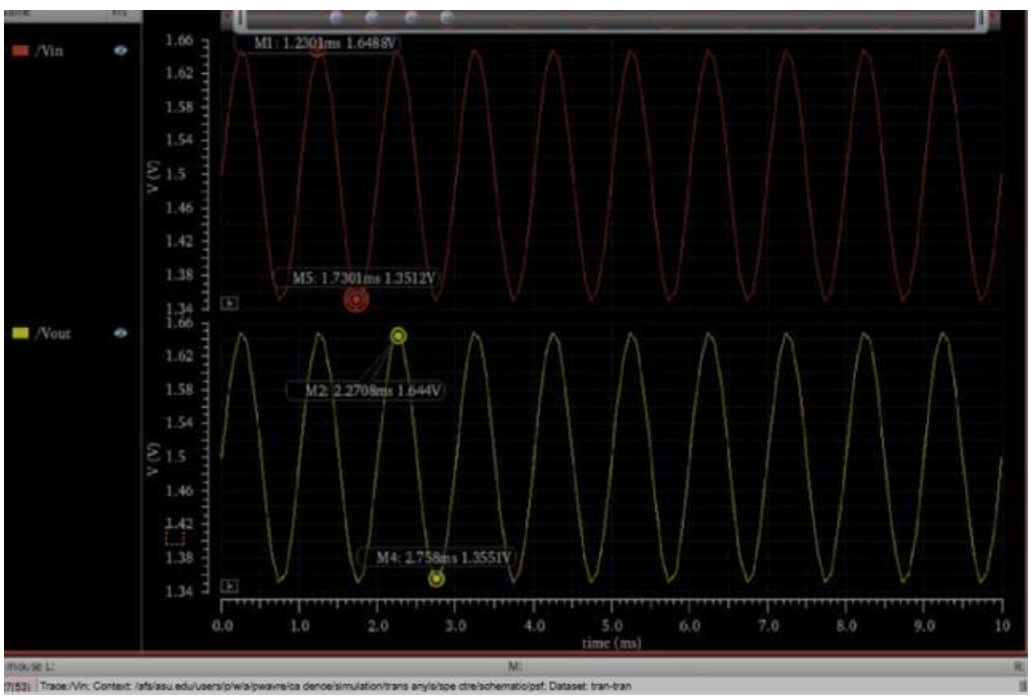

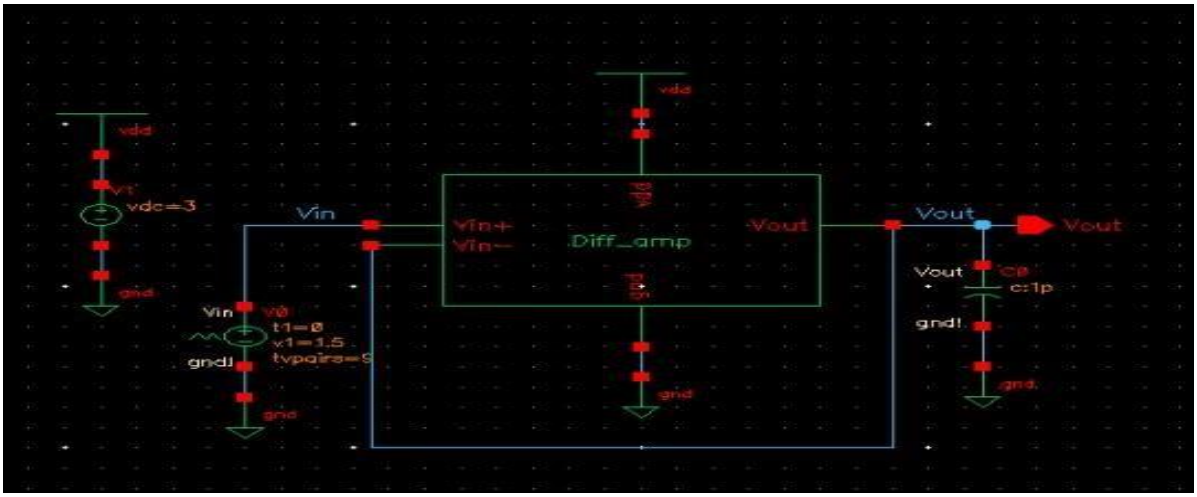

+ve slew rate:

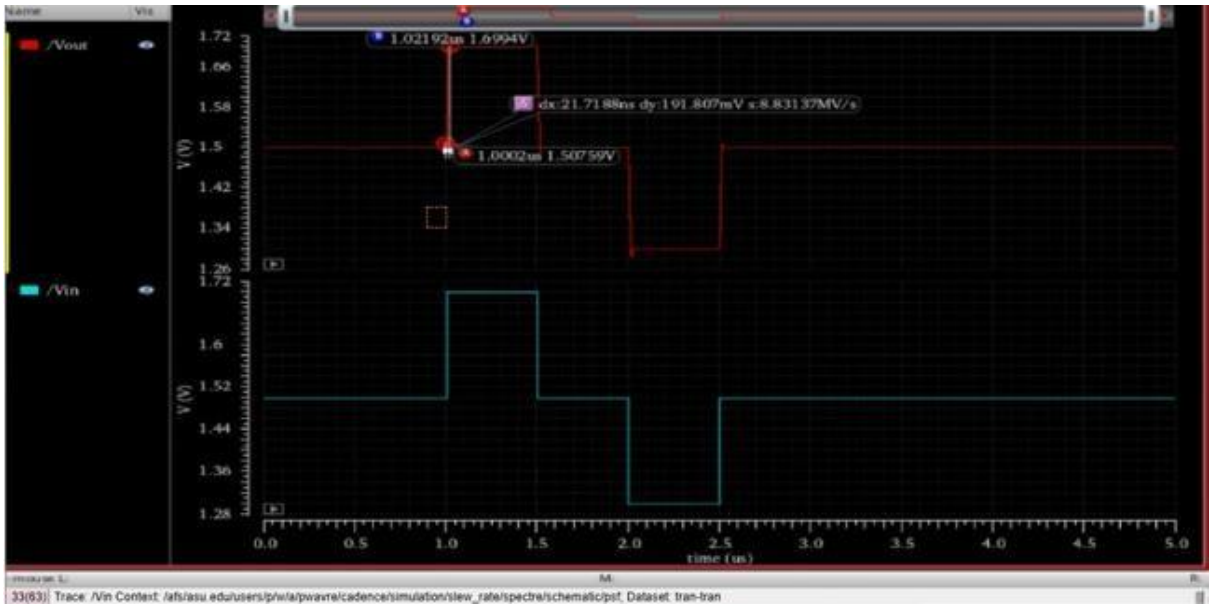

Fig: Positive Slew rate for step input

+ve Slewrate = (1.6994–1.50759)v/(1.02192-1.0002)us=8.83135Mv/s

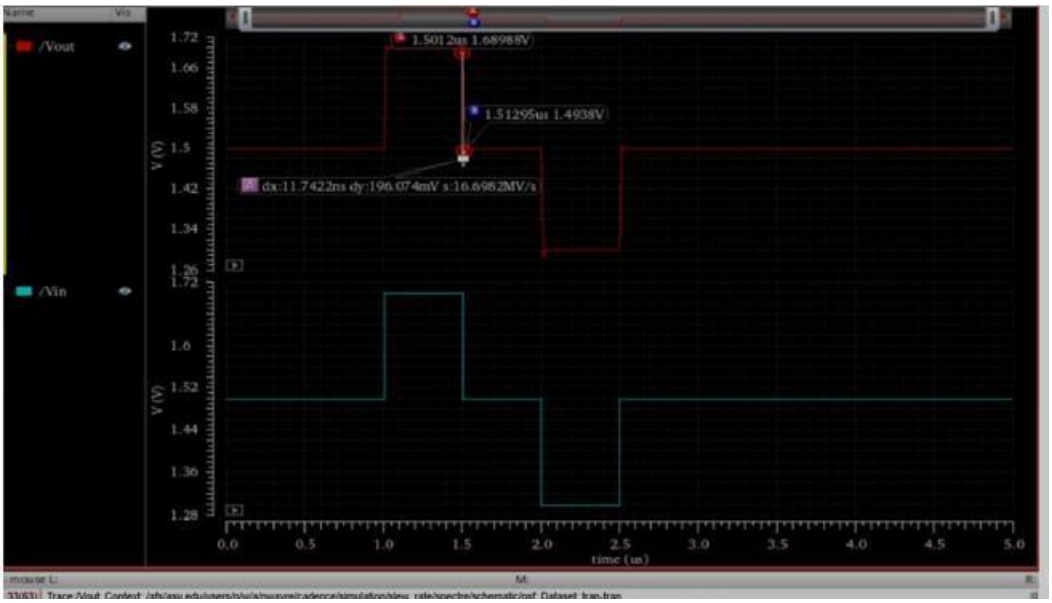

Fig: Negative Slew rate for step input

-ve Slewrate = (1.4938-1.68988)v/(1.51295-1.5012)us=-16.6982Mv/s

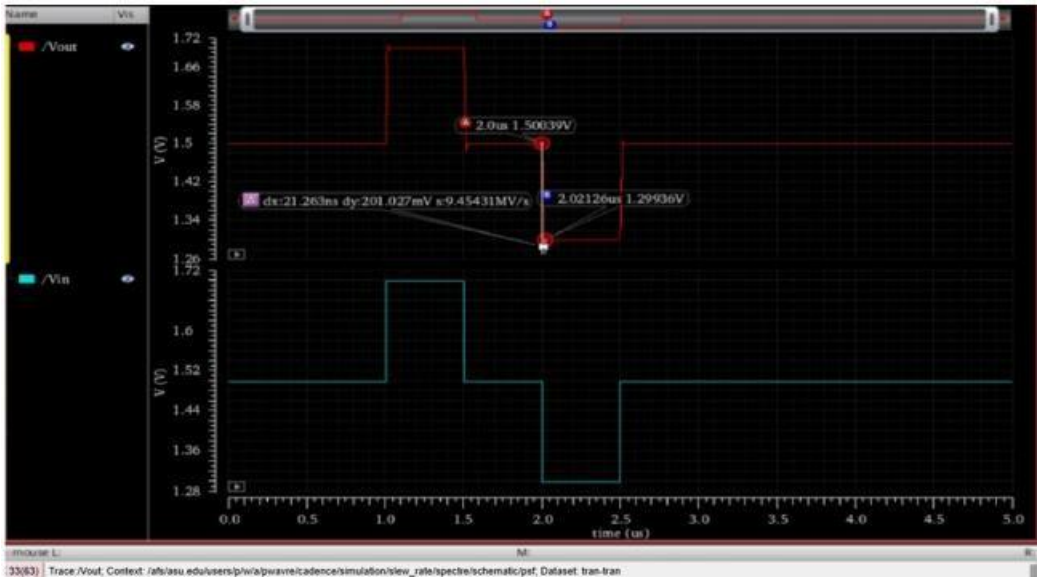

Fig: Negative Slew rate for step input

-ve Slewrate = (1.29936-1.50039)v/(2.02126-2.0)us=-9.4543Mv/s

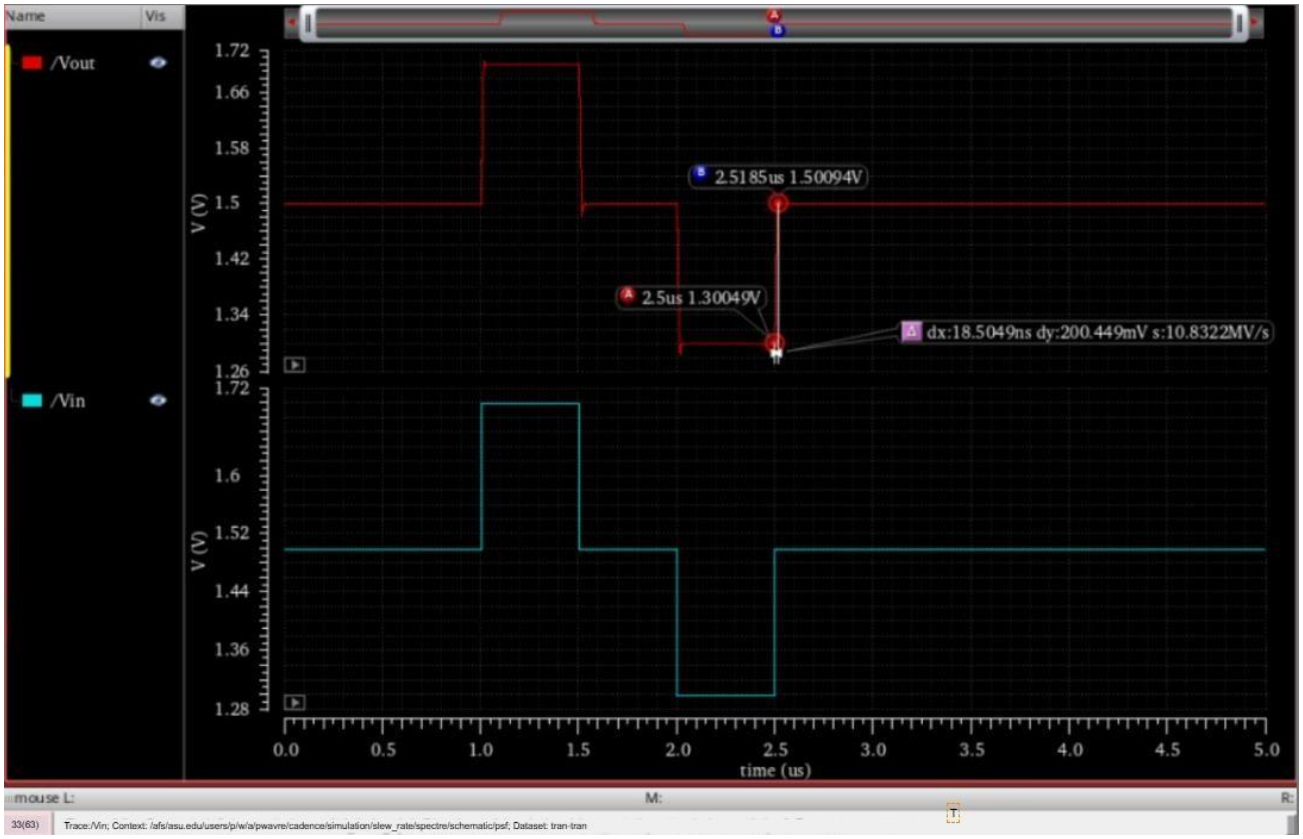

Fig: Positive Slew rate for step input

+ve Slewrate =(1.50094-1.30049)v/(2.5185-2.5)us=10.832Mv/s

Slew Rate

Definition:

Slew rate is the speed at which an op-amp's output voltage changes in response to a step input signal. It is typically measured between 10% and 90% of the signal amplitude.

Significance:

- Determining Bandwidth and High-Frequency Performance: A higher slew rate allows the op-amp to handle high-frequency signals without distortion, directly influencing its bandwidth and overall performance.
- Ensuring Accurate Signal Reproduction:
  A fast slew rate ensures the output closely follows rapid input variations, preserving signal integrity and minimizing waveform distortion.
- Optimizing Transient Response and Settling Time:
  The slew rate affects how quickly an amplifier stabilizes after sudden input changes, which is essential for precision applications requiring minimal settling time.
- Enhancing Component Safety and Reliability:
  Controlled slew rates help prevent excessive electrical stress on circuit components, ensuring long-term stability and reliability

Conclusion:

We designed a differential amplifier by integrating a Beta Multiplier, Wide-Swing Cascode, and Telescopic Amplifier, followed by a thorough performance evaluation.

Key findings include:

- Gain and phase plots were analyzed for an input range of 1.5V–2V with a 3V supply, achieving a Unity Gain Frequency of 50 MHz while determining gain and phase margins.
- Transient analysis was conducted with a 1kHz input signal, producing a 0.3Vp-p output.
- The slew rate was measured using step input signals to assess the amplifier's dynamic performance