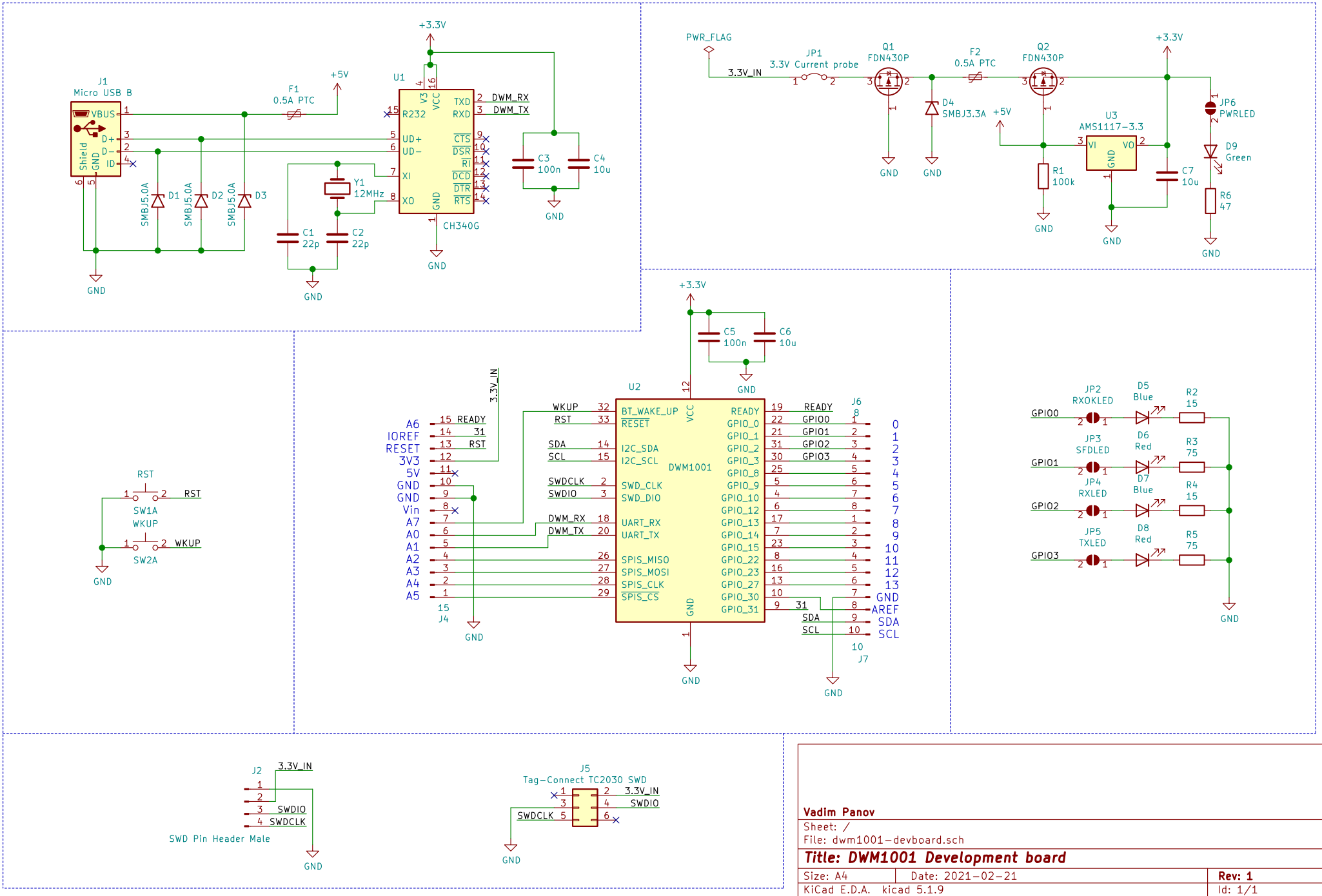
J1
Micro USB B
VBUS
D+
D−
ID
GND
Shield
F1
0.5A PTC
+5V
+3.3V
U1
CH340G
R232
VCC
V3
TXD
RXD
UD+
UD−
XI
XO
CTS
DSR
RI
DCD
DTR
RTS
DWM_RX
DWM_TX
SMBJ5.0A
D1
D2
D3
Y1
12MHz
C1
22p
C2
22p
C3
100n
C4
10u
PWR_FLAG
JP1
3.3V Current probe
3.3V_IN
Q1
FDN430P
Q2
FDN430P
F2
0.5A PTC
D4
SMBJ3.3A
U3
AMS1117-3.3
VI
VO
R1
100k
C7
10u
JP6
PWRLED
D9
Green
R6
47
U2
DWM1001
BT_WAKE_UP
RESET
I2C_SDA
I2C_SCL
SWD_CLK
SWD_DIO
UART_RX
UART_TX
SPIS_MISO
SPIS_MOSI
SPIS_CLK
SPIS_CS
READY
GPIO_0
GPIO_1
GPIO_2
GPIO_3
GPIO_8
GPIO_9
GPIO_10
GPIO_12
GPIO_13
GPIO_14
GPIO_15
GPIO_22
GPIO_23
GPIO_27
GPIO_30
GPIO_31
WKUP
RST
SDA
SCL
SWDCLK
SWDIO
DWM_RX
DWM_TX
C5
100n
C6
10u
J4
A6
IOREF
RESET
3V3
5V
GND
Vin
A7
A0
A1
A2
A3
A4
A5
J6
J7
AREF
RST
SW1A
WKUP
SW2A
JP2
RXOKLED
JP3
SFDLED
JP4
RXLED
JP5
TXLED
D5
Blue
D6
Red
D7
Blue
D8
Red
R2
15
R3
75
R4
15
R5
75
GPIO0
GPIO1
GPIO2
GPIO3
J2
SWD Pin Header Male
J5
Tag-Connect TC2030 SWD
Vadim Panov
Sheet: /
File: dwm1001-devboard.sch
Title: DWM1001 Development board
Size: A4
Date: 2021-02-21
Rev: 1
KiCad E.D.A. kicad 5.1.9
Id: 1/1