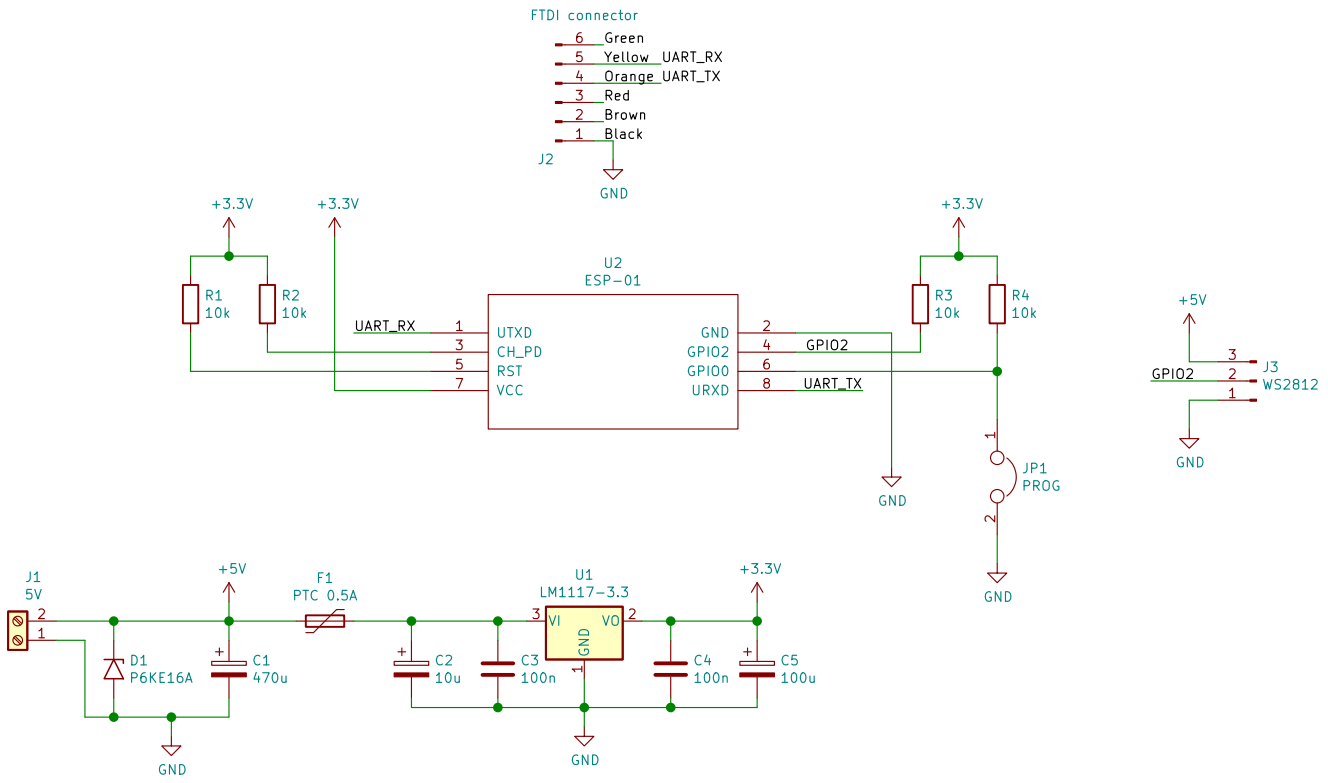

Vadim Panov

Sheet: /

File: esp01_neopixel_controller.sch

Title: ESP01 Neopixel controller

Size: A4	Date: 2020-03-21	**Rev: 1**
KiCad E.D.A. kicad (5.1.5-0-10_14)		Id: 1/1