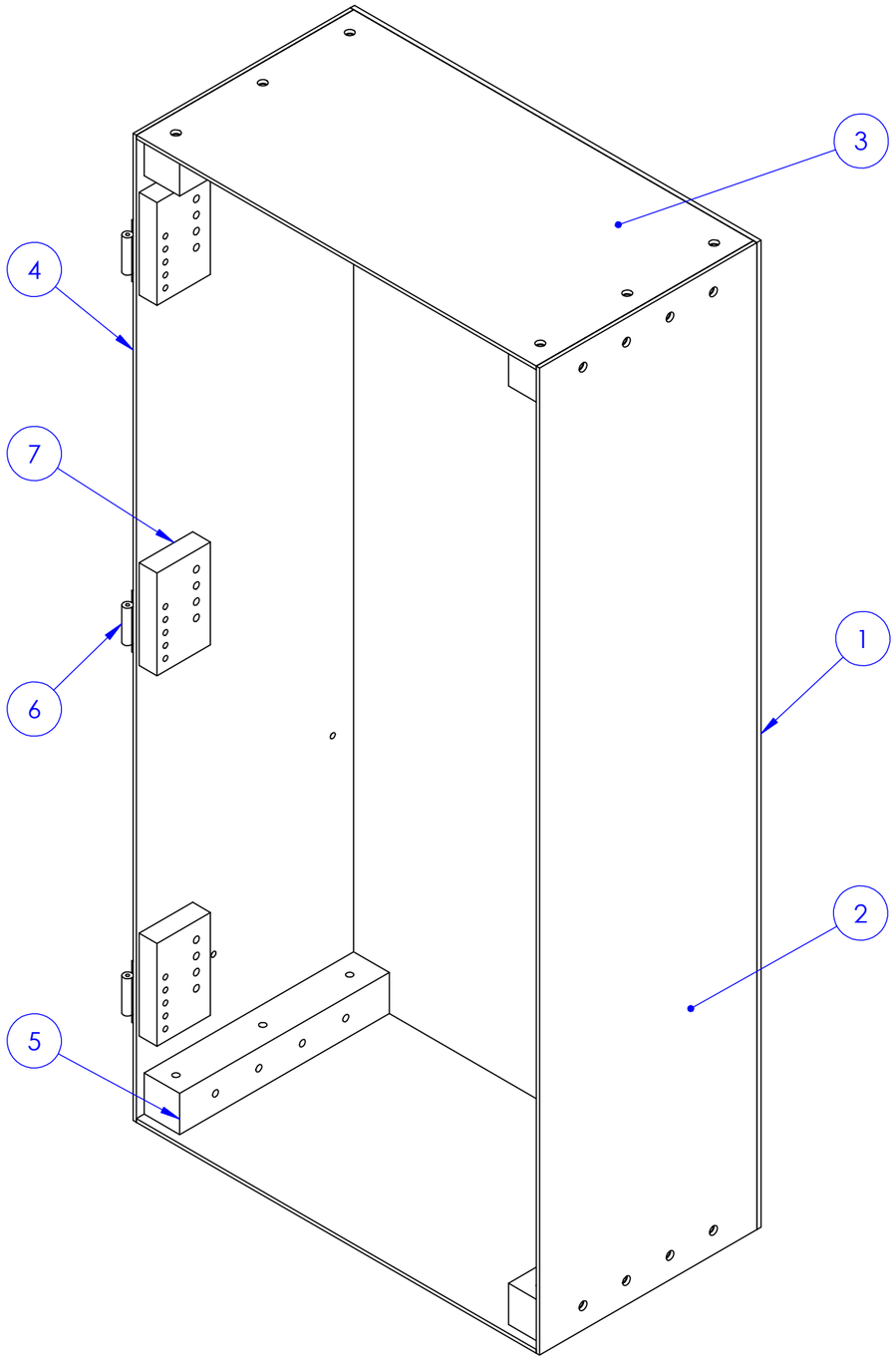

ITEM NO.	PART NUMBER	DESCRIPTION	MATERIAL	QTY.
1	M-D-003	Door Back Sheet	Acrylic (Medium-high impact)	1
2	M-D-004	Door Side Sheet	Aluminum 5052-H32	1
3	M-D-005	Door Top and Bottom Sheet	Aluminum 5052-H32	2
4	M-D-001	Door Hinged Sheet	Aluminum 5052-H32	1
5	M-D-006	Fitting Block	Aluminum 6061 Alloy	4
6	M-D-008	Hinge (Purchased Part)	Aluminum (unspecified)	3
7	M-D-010	Hinge Mounting Bar	Aluminum 6061 Alloy	3

ASSEMBLY:

PART NO

PROJECT

	NAME	DATE
DRAWN		
CHECKED		

MATERIAL:

Est. Mass: g

DO NOT SCALE DRAWING

TITLE:

M-D-000-A-DOOR ASSEMBLY

DWG. NO.

REV

SCALE: 1:3

SHEET 1 OF 1