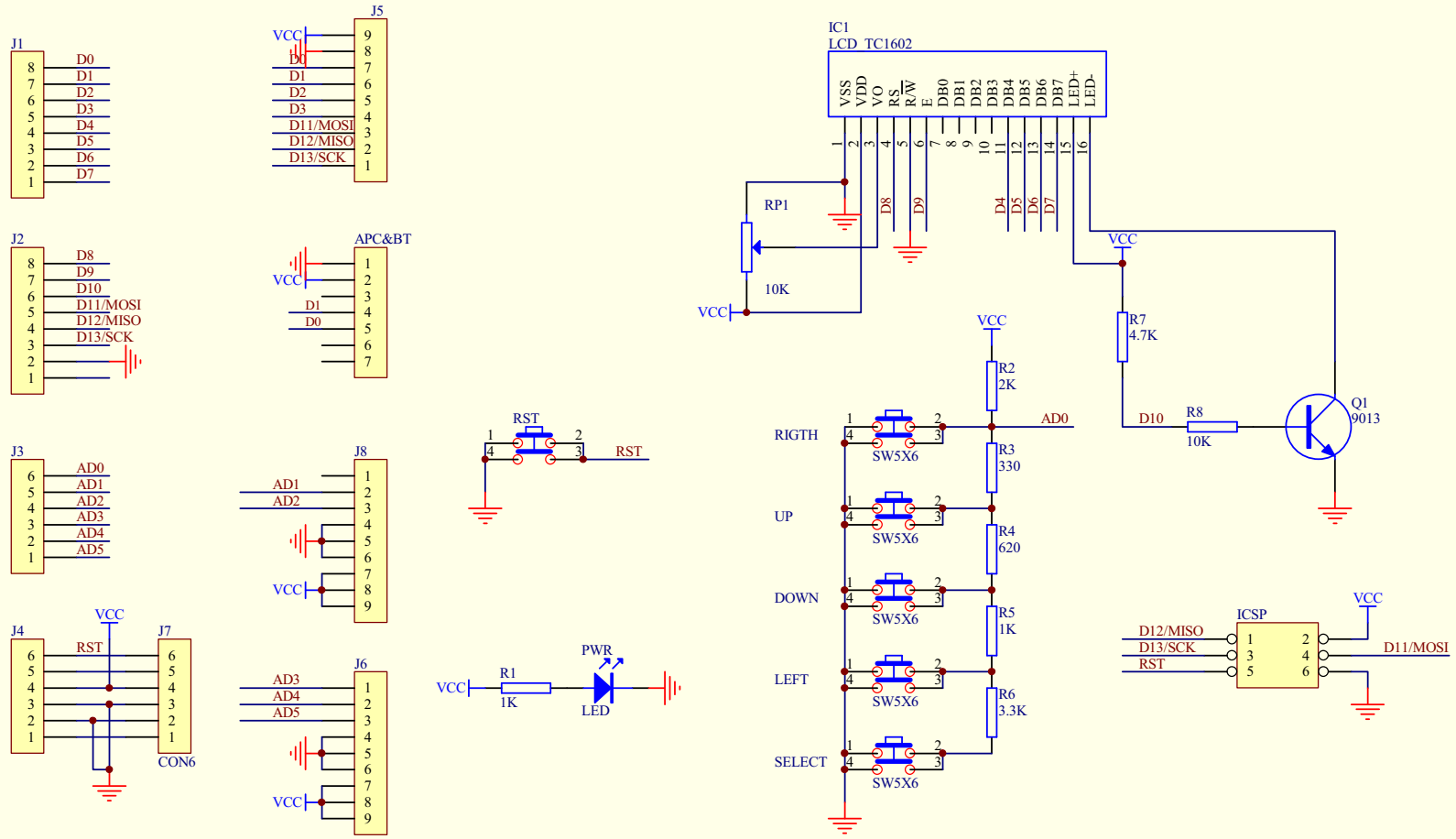


| | | | |
|---|---|---|---|
| Title | LCDKeypad Shield | | |
| Size A4 | Number | | Revision 1.0 |
| Date: 22-Jul-2010 | | Sheet of | |
| File: D:\plan\产品记录\arduino\arduino_NGDM0164.DDB | | Drawn By: | |