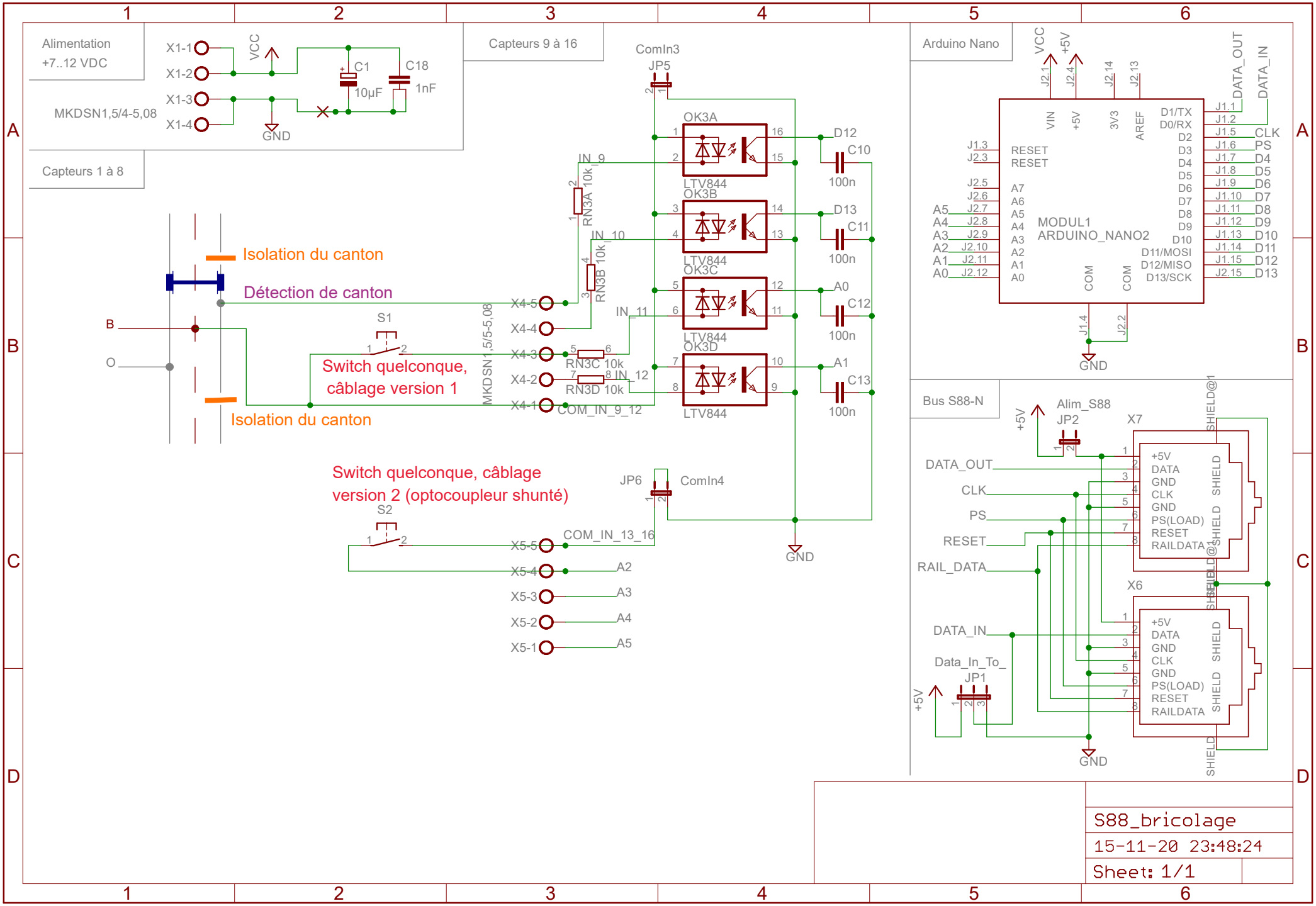
Alimentation
+7..12 VDC
MKDSN1,5/4-5,08
X1-1
X1-2
X1-3
X1-4
VCC
GND
C1
10µF
C18
1nF
Capteurs 9 à 16
Capteurs 1 à 8
ComIn3
JP5
OK3A
OK3B
OK3C
OK3D
LTV844
IN_9
IN_10
IN_11
IN_12
RN3A 10k
RN3B 10k
RN3C 10k
RN3D 10k
D12
D13
A0
A1
C10
C11
C12
C13
100n
Isolation du canton
Détection de canton
B
O
S1
Switch quelconque,
câblage version 1
MKDSN1,5/5-5,08
X4-5
X4-4
X4-3
X4-2
X4-1
COM_IN_9_12
Switch quelconque, câblage
version 2 (optocoupleur shunté)
JP6
ComIn4
S2
COM_IN_13_16
X5-5
X5-4
X5-3
X5-2
X5-1
A2
A3
A4
A5
Arduino Nano
MODUL1
ARDUINO_NANO2
RESET
A7
A6
A5
A4
A3
A2
A1
A0
COM
VIN
+5V
3V3
AREF
D1/TX
D0/RX
D2
D3
D4
D5
D6
D7
D8
D9
D10
D11/MOSI
D12/MISO
D13/SCK
DATA_OUT
DATA_IN
CLK
PS
Bus S88-N
Alim_S88
JP2
X7
X6
DATA_OUT
CLK
PS
RESET
RAIL_DATA
DATA_IN
Data_In_To_
JP1
+5V
DATA
GND
PS(LOAD)
RAILDATA
SHIELD
SHIELD@1
S88_bricolage
15-11-20 23:48:24
Sheet: 1/1