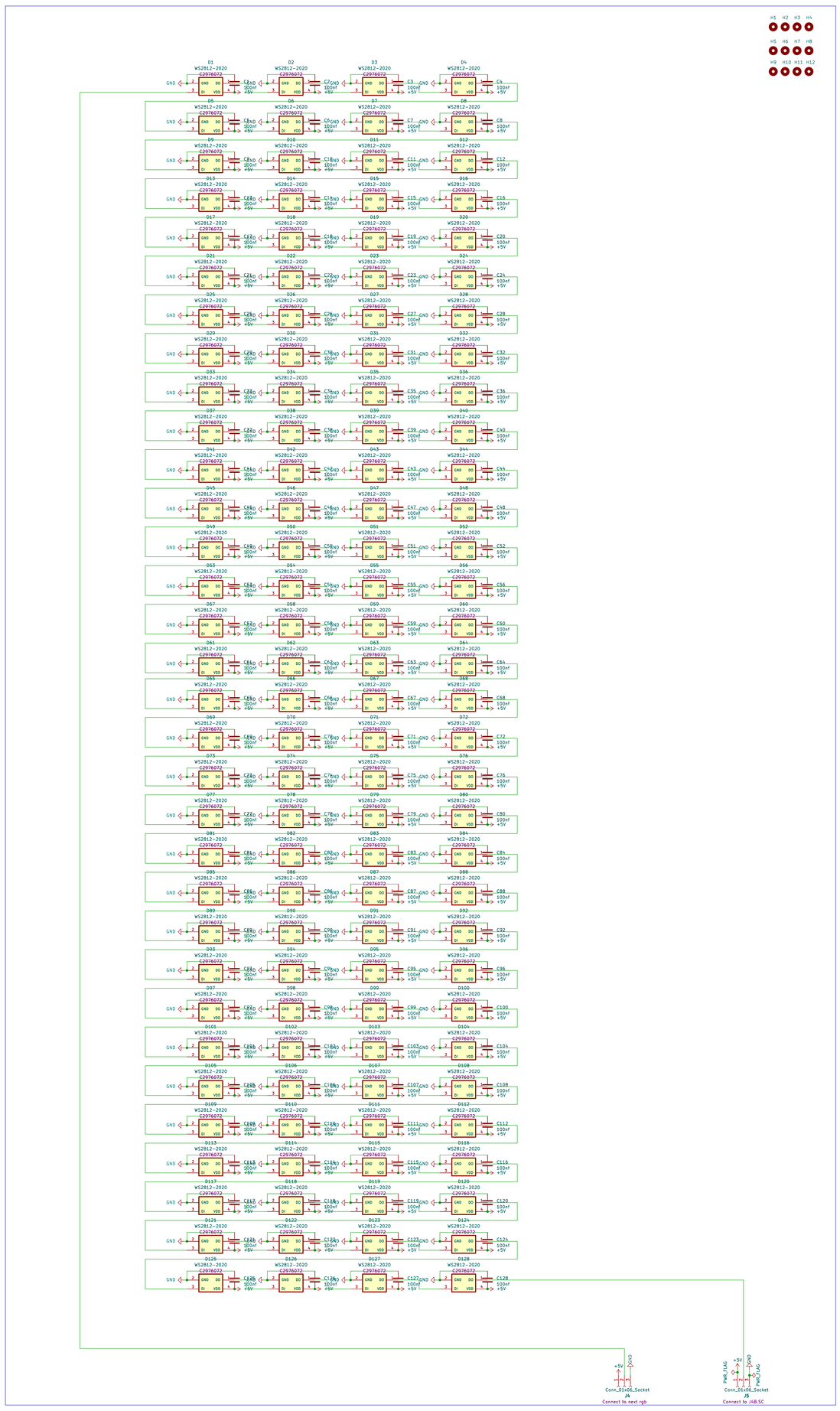

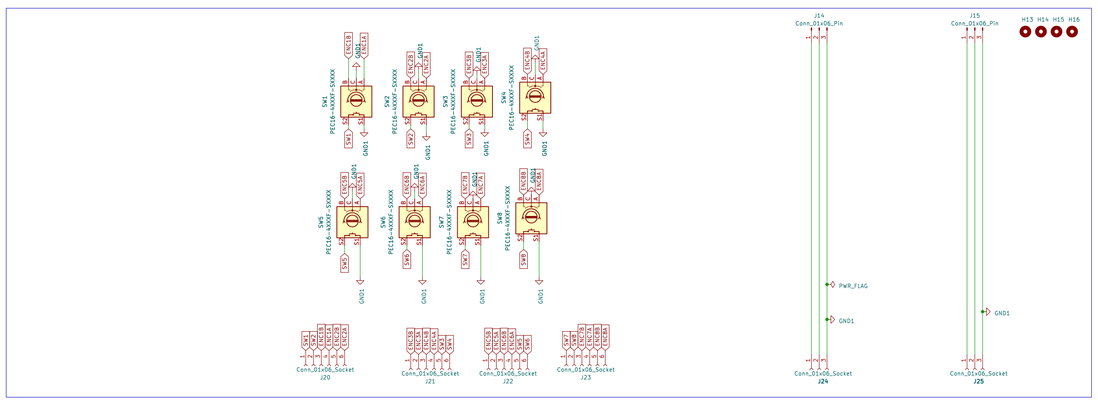

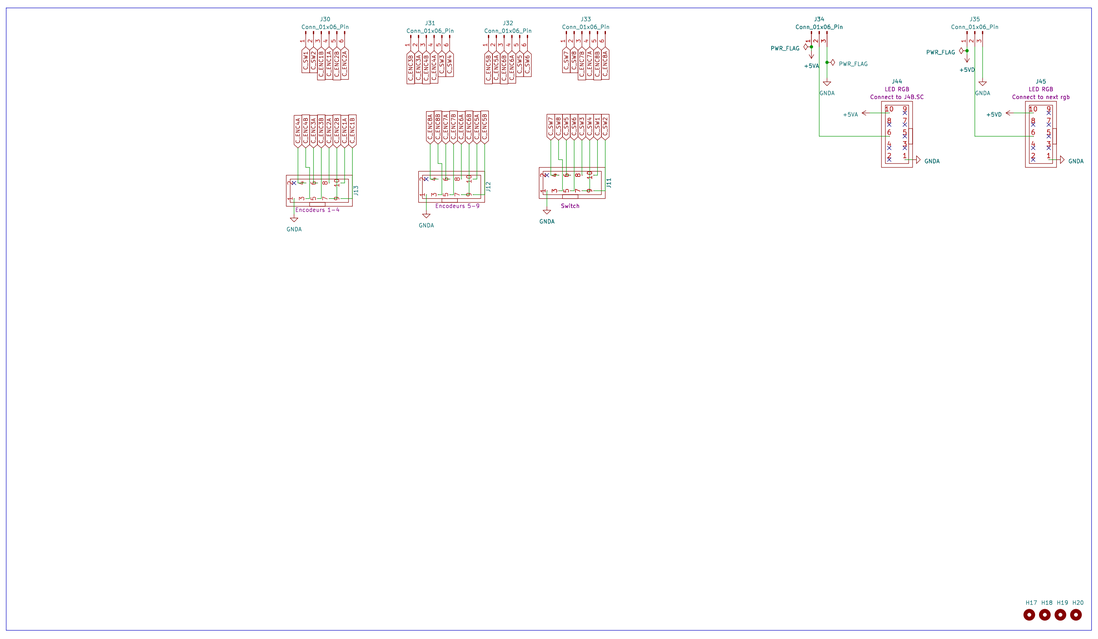

Sheet: /
File: PEC_16_V0.2.kicad_sch

Title:

Size: A0	Date:	Rev:
KiCad E.D.A. kicad (7.0.0)		Id: 1/1