KATHMANDU UNIVERSITY
End Semester Examination [C]
November, 2018

Marks scored:

Level : B.E.
Year : II

Course : MEEG 206
Semester: II

Exam Roll No.:

Time: 30 mins.

F.M. : 20

Registration No. :

Date NOV 18 2018

SECTION "A"
[20 Q.×1=20 marks]

Tick the most appropraite answer.

1. A slider crank chain consists of following number of turning and sliding pair
   a. 1,3 b. 2,2 c. 4,0 d. 3,1

2. The mechanism having 8 numbers of links will have _____ instant centers.
   a. 15 b. 28 c. 30 d. 36

3. Gasoline or Diesel engine is a ..... Inversion of slider cranks mechanism.
   a. First b. Second c. Third d. Fourth

4. The velocity ratio of two pulleys connected by an open belt drive or crossed belt drive is
   a. directly proportional to their diameters
   b. inversely proportional to their diameters
   c. directly proportional to the square of their diameters
   d. inversely proportional to the square of their diameters

5. For S.H.M. cam, the acceleration of the follower at the ends of the stroke and midstroke respectively, is
   a. maximum and zero b. zero and maximum
   c. minimum and maximum d. zero and minimum

6. For high speed engines, the cam follower should move with
   a. Uniform velocity b. Simple harmonic motion
   c. Cycloidal motion d. Uniform acceleration

7. Slip in belt drive is due to
   a. Material of pulley
   b. Size of pulley
   c. Size of belt
   d. Insufficient friction between belt and pulley

8. When two pulleys of different diameters are connected by means of an open belt drive, then the angle of contact taken into consideration should be of the
   a. larger pulley b. smaller pulley
   c. average of two pulleys d. driving pulley

9. Calculate speed of driving shaft in compound gear train, if the drivers have 50, 60, 80 and 100 teeth and followers have 18, 40, 60 and 80 teeth. Speed of driven shaft is 150 rpm.
   a. 21.73 rpm b. 30.23 rpm c. 19.77 rpm d. 20.33 rpm

10. For an involute gear, the ratio of base circle radius and pitch circle radius is equal to
a. Sin φ b. Tan φ c. Cos φ d. Sec φ

11. The difference between space width and tooth thickness is
a. Clearance b. Undercut c. Backlash d. Tooth space

12. The contact ratio for gears is
a. Less than one b. One c. Greater than one d. Infinite

13. When the axes of first and last gear are co-axial, then gear train is known as
a. simple gear train b. compound gear train
c. reverted gear train d. epicyclic gear train

14. At nodal point in a shaft, amplitude of torsional vibration is
a. Zero b. Minimum c. Maximum d. more than 1

15. Static balancing involves balancing of
a. Couples b. Forces c. Masses d. Radii

16. For high speed engines, the cam follower should move with
a. uniform velocity b. simple harmonic motion
c. uniform acceleration d. cycloidal motion

17. A cam operating roller follower has the following dimensions, radius of base and nose circle as 15 mm and 10 mm respectively and distance between them is 8 mm. Determine lift made by the follower
a. 5 mm b. 12.5 mm c. 3 mm d. 17 mm

18. Determine natural frequency of a system, which has equivalent spring stiffness of 30000 N/m and mass of 20 kg?
a. 12.32 Hz b. 4.10 Hz c. 6.16 Hz d. None

19. When there is a reduction in amplitude over every cycle of vibration, then the body is said to have
a. Free vibration b. Damped vibration
c. Forced vibration d. Transverse Vibration

20. Particles of a body move _____ to its axis in longitudinal vibration.
a. Parallel b. Perpendicular c. Coincident d. circular

KATHMANDU UNIVERISTY
End Semester Examination [C]
November, 2018

NOV 1 8 2018

Level : B.E.
Year : II
Time : 2 hrs. 30 mins.

Course : MEEG 206
Semester: II
F.M. : 55

SECTION "B"

Attempt ALL questions. Assume any missing data with proper reason.

1.

a. Define redundant constraint. Why do we use redundant constraints in machines? [1+1]

b. State Kennedy's Theorem. Locate all instant centers of the mechanism shown below.

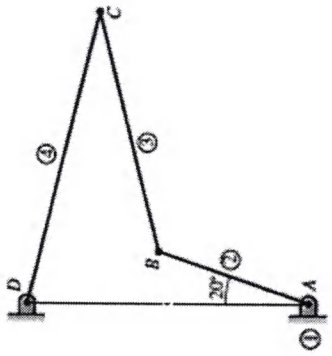

[1+3]

2.

a. What is Grashof Criterion? Explain Crank rocker mechanism with appropriate figure. [1+2]

b. Figure 1.29 shows a mechanical press used to exert large forces to insert a small part into a larger one. Draw a kinematic diagram, using the end of the handle as a point of interest. Also compute the degrees of freedom. [3+2]

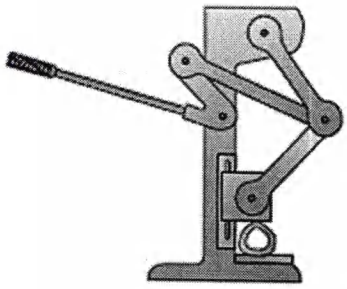

3.

a. A cam is to be designed for an automated part loader as shown in Figure below. The prescribed motion for this application is as follows:

i) Rise 50 mm in 1.5 s using the constant velocity motion scheme.

ii) Return in 2.0 s using the Simple Harmonic motion scheme.

iii) Dwell for 0.75 s.
iv) Repeat the sequence.

For the given application, graphically construct a follower displacement diagram. Roller Follower of diameter 10 mm and 50 mm minimum diameter of Cam is used which lies with offset of 10 mm from the Cam axis. Draw the required Cam profile. [3+5]

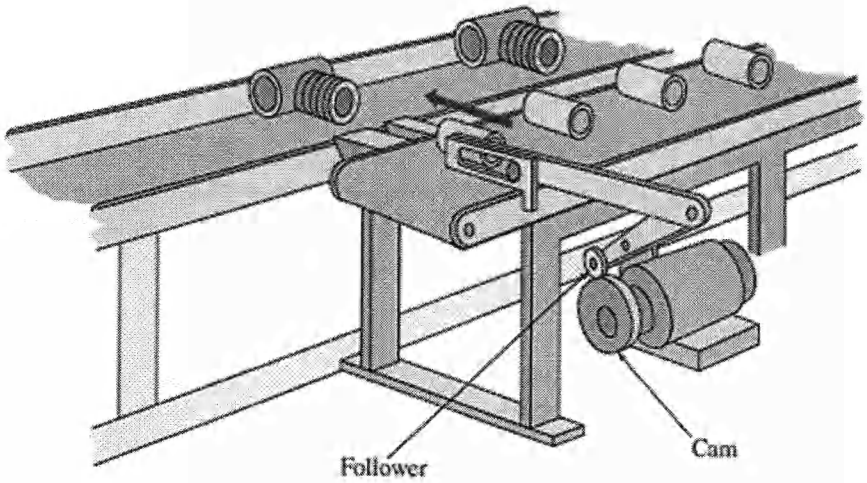

4. Define fundamental law of gearing. A pair of gears, having 40 and 20 teeth respectively, are rotating in mesh, the speed of the smaller being 2000 r.p.m. Determine the velocity of sliding between the gear teeth faces at the point of engagement, at the pitch point, and at the point of disengagement if the smaller gear is the driver. Assume that the gear teeth are 20° involute form, addendum length is 5 mm and the module is 5 mm. Also find length of arc of contact and contact ratio. [2+6]

5. Show that intermediate gear in a simple gear train is an idler. A reverted epicyclic gear train for a hoist block is shown in Figure. The arm E is keyed to the same shaft as the load drum and the wheel A is keyed to a second shaft which carries a chain wheel, the chain being operated by hand. The two shafts have common axis but can rotate independently. The wheels B and C are compound and rotate together on a pin carried at the end of arm E. The wheel D has internal teeth and is fixed to the outer casing of the block so that it does not rotate.The wheels A and B have 16 and 36 teeth respectively with a module of 3 mm. The wheels C and D have a module of 4 mm.

Find:

i. The number of teeth on wheels C and D when the speed of A is ten times the speed of arm E, both rotating in the same sense, and

ii. The speed of wheel D when the wheel A is fixed and the arm E rotates at 450 r.p.m. anticlockwise. [2+3+3]

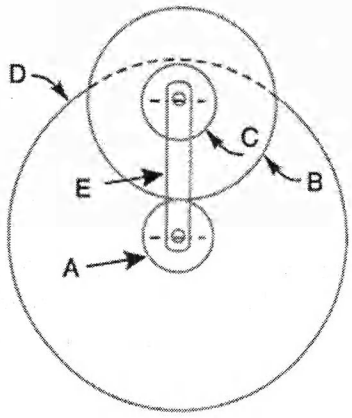

NOV 1 8 2018

6.

a. What is the difference between open belt drive and crossed belt drive? [2]

b. Find the power transmitted by a belt running over a pulley of 600 mm diameter at 200 r.p.m. The coefficient of friction between the belt and the pulley is 0.25, angle of lap 160° and maximum tension in the belt is 2500 N. [4]

c. What is the difference between gear train and rope drive in terms of their applications? [2]

7. Define critical or whirling speed of shaft? What are the causes of vibration in machines and how can they is reduced? [1+2]

8. A shaft carries four masses A, B, C and D of magnitude 200 kg, 300 kg,400 kg and 200 kg respectively and revolving at radii 80 mm, 70 mm, 60 mm and 80 mm in planes measured from A at 300 mm, 400 mm and 700 mm. The angles between the cranks measured anticlockwise are A to B 45°, B to C 70° and C to D 120°. The balancing masses are to be placed in planes X and Y. The distance between the planes A and X is 100 mm, between X and Y is 400 mm and between Y and D is 200 mm. If the balancing masses revolve at a radius of 100 mm, find their magnitudes and angular positions. [6]