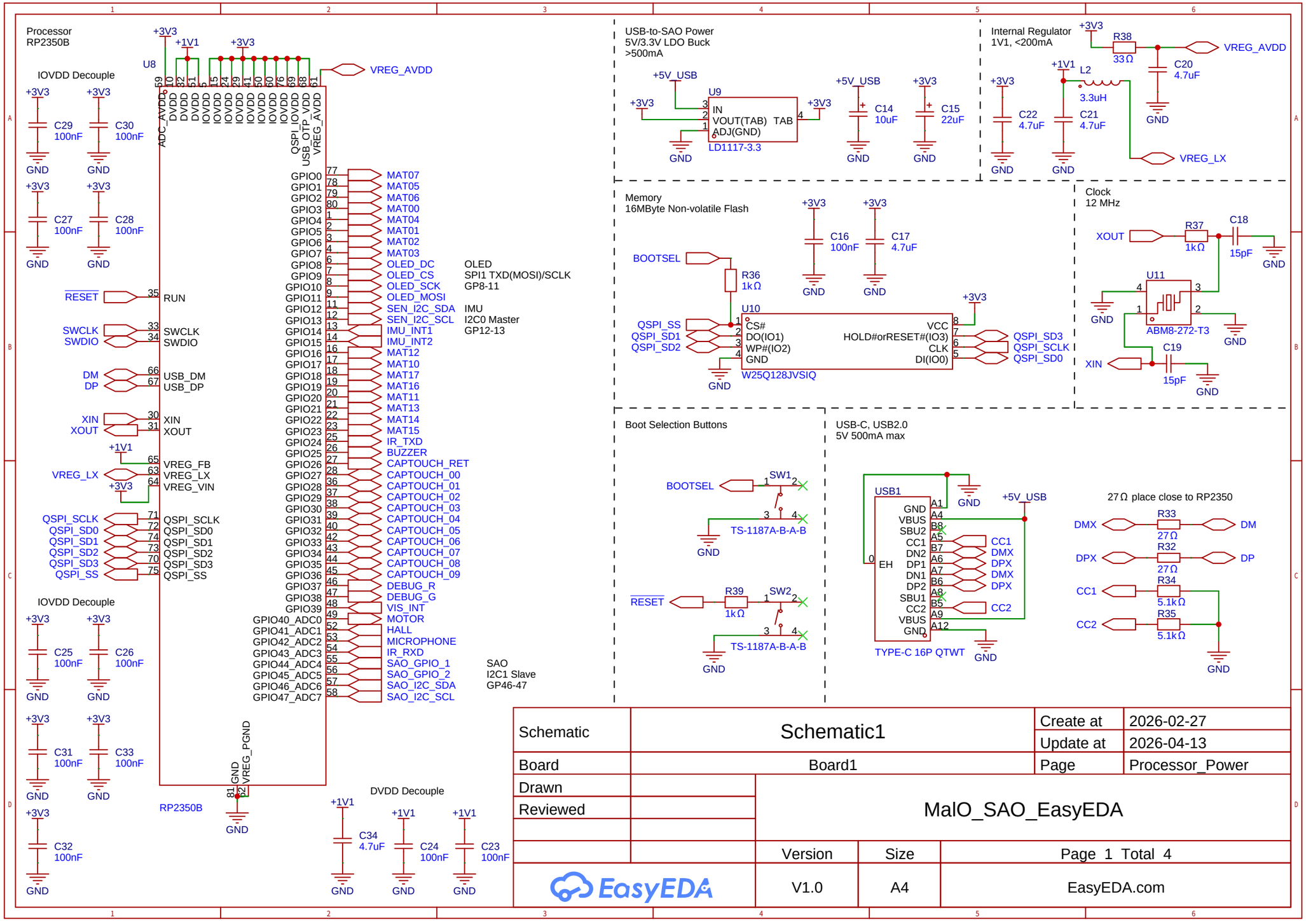

X5R Memory?

crystal: footprint broken, wil raise device standardization error

DNI diode?

DNI diode?

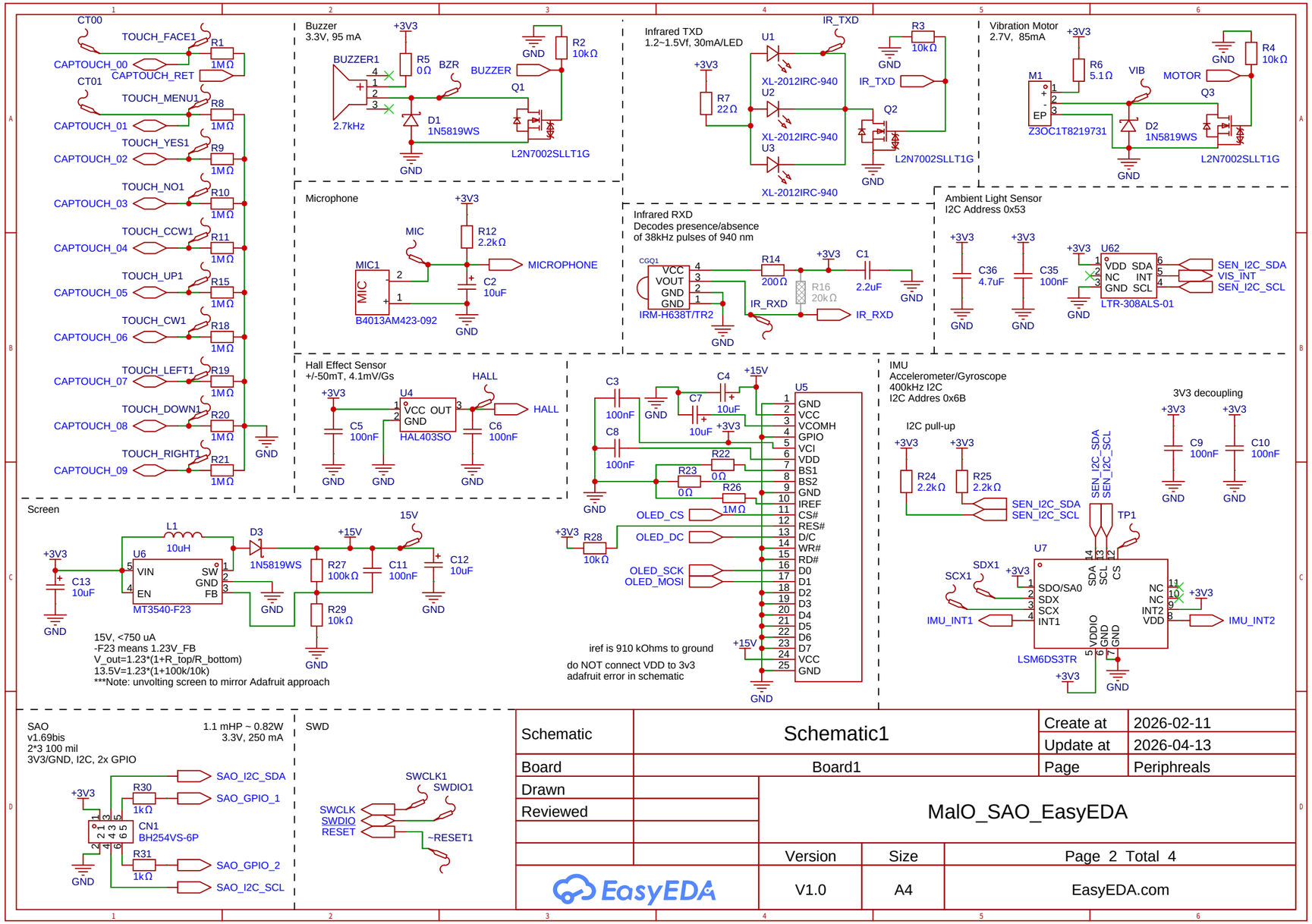

put as same side as processor
compare processor temp with light
and limit degradation of screen in direct sunlight...

SPI vs I2C...
SPI to share with screen, easier to reset?
I2C slower (more overhead?). extra pin (sda/scl vs cs)
--> can fully leverage DMA with I2C, easier RTOS integration if no resource contention

***can nix 10uF (and/or 100nF) output cap?
not in adafruit layout
750uA used << 100mA capability

spi need pull up on sda/scl? driven...

MBR120 is alt diode
or MT3540

***TODO: GND SDx, SCx for proper operation
***TODO: GND SDO: is LSB of I2C address

Schematic	Schematic1	Create at	2026-02-11
		Update at	2026-04-13
Board	Board1	Page	Periphreals
Drawn			
Reviewed			
		Version	Size	Page 2 Total 4
EasyEDA	MalO_SAO_EasyEDA	V1.0	A4	EasyEDA.com

red pins1-2, max 2.3V
green pins3-4,max3.3V

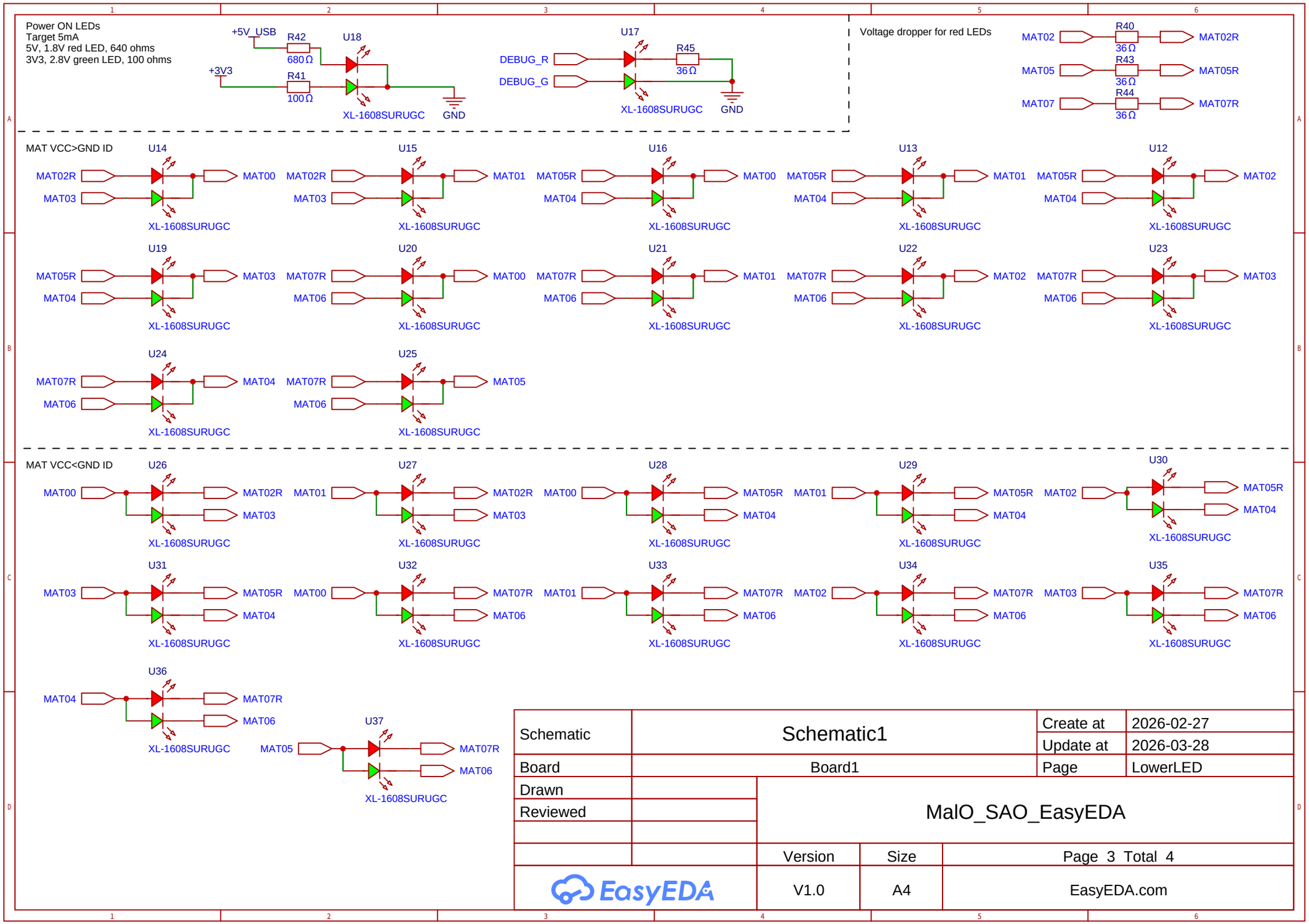

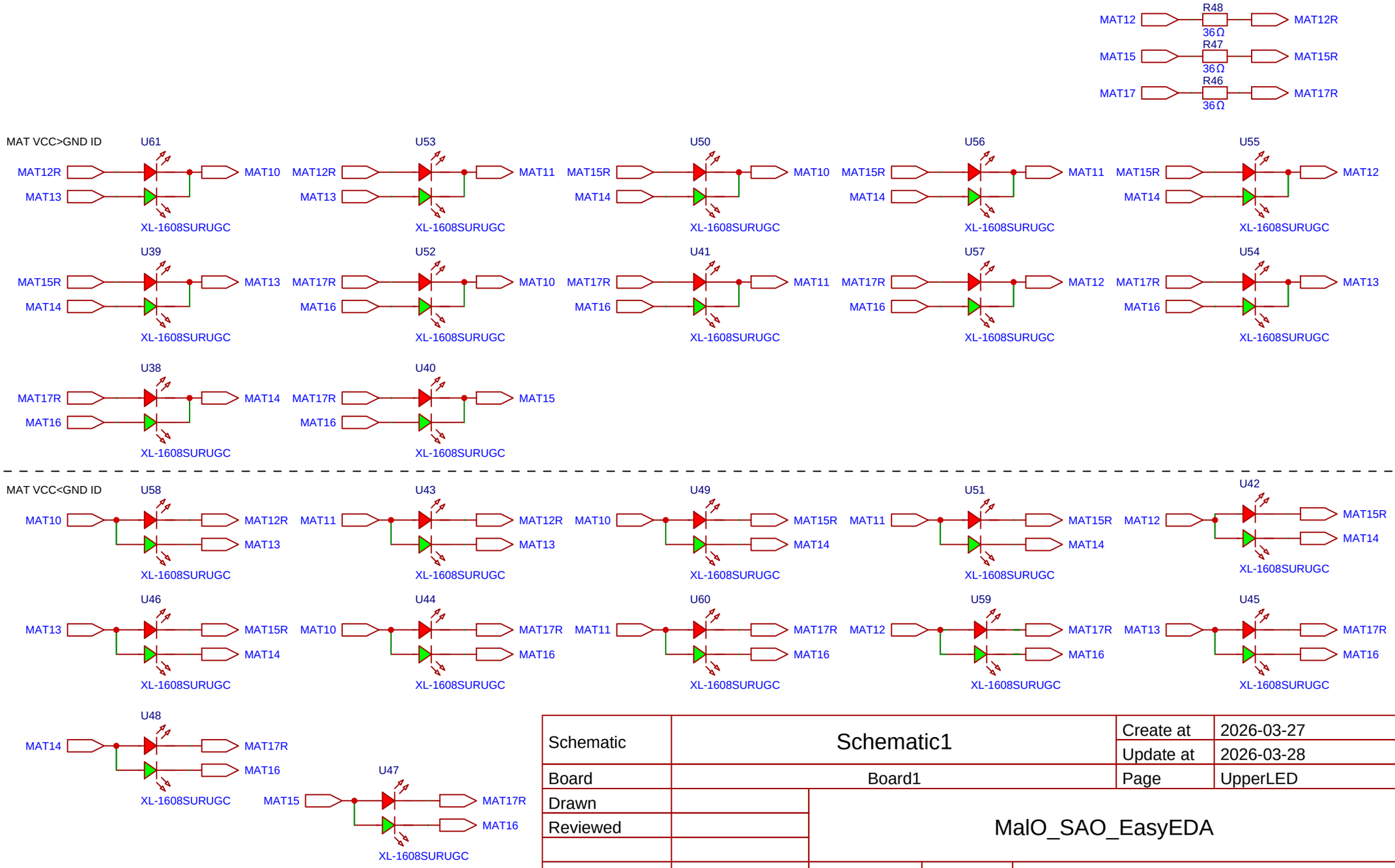

Schematic	Schematic1	Create at	2026-03-27
		Update at	2026-03-28
Board	Board1	Page	UpperLED
Drawn	MalO_SAO_EasyEDA		
Reviewed			
		Version	Size	Page 4 Total 4
EasyEDA		V1.0	A4	EasyEDA.com